STORNOMATIC 900
SM9662D025AP
SP9662D025AP
BASIC RADIO MANUAL
VOLUME I

Parts numbers for:

Mobile radio	2001-01	for all countries
Transportable radio	M905690G5	Denmark
	M905690G6	Finland
	M905690G7	Norway
	M905690G8	Sweden

Service Coordination.

Date: 11-84
Edition: 4
Publication no: 8311.9614-03

60.839-E1

VOLUME I
BASIC RADIO MANUAL

RADIO NOMENCLATURE CONTROL HEAD NOMENCALTURE MODULE SURVEY	1
TECHNICAL SPECIFICATIONS	2
GENERAL DESCRIPTION OPERATING INSTRUCTIONS	3
CONTROL CIRCUITS PROGRAMMING	4
TRANSPORTABLE SP9 INSTALLATION ACCESSORIES	5
MOBILE SM9 INSTALLATION ACCESSORIES	6
ADJUSTMENT PROCEDURE	7
	8
GENERAL MODULE AND PARTS LISTS MECHANICAL LAYOUTS	9
BLOCK DIAGRAMS FUNCTIONAL DIAGRAMS VOLTAGE DISTRIBUTION SYSTEM	10

ADDITIONAL MANUALS:

VOLUME II - MODULE MANUAL

Storno

COMBINATION NUMBER - RADIO EQUIPMENT

SM9xx

PRODUCT CODE	TX FREQ. RANGE	RX FREQ. RANGE	CHAN. SPACE	RADIO TYPE	POWER OUTPUT			FREQ. CAP.	TARGET AREA		OSC. STAB	PACK SIZE	SYSTEM VOLT	RX TYPE	AUDIO POWER
0 & 1 & 2	3	4	5	6	7	8	9	10	11	12	13	14	15	16	17
SM9	6	6	2	D	0	2	5	A	P		0	0		0	0

D	DENMARK
S	SWEDEN
N	NORWAY
Y	FINLAND

L	12 V
H	24 V

SP9xx

PRODUCT CODE	TX FREQ. RANGE	RX FREQ. RANGE	CHAN. SPACE	RADIO TYPE	POWER OUTPUT			FREQ. CAP.	CONTROL VERSION		OSC. STAB	PACK SIZE	SYSTEM VOLT	RX TYPE	AUDIO POWER
0 & 1 & 2	3	4	5	6	7	8	9	10	11	12	13	14	15	16	17
SP9	6	6	2	D	0	2	5	A	P		0	0	0	0	0

CODE No. M905690G5 ➡	D	DENMARK
CODE No. M905690G8 ➡	S	SWEDEN
CODE No. M905690G7 ➡	N	NORWAY
CODE No. M905690G6 ➡	Y	FINLAND

Storno

SM9xx/SP9xx

MODULE SURVEY

	MODULE	SM9xx	SP9xx
L855358G1	AA908	X	X
M905753G2	AA9017	X	X
L855497G2	AC902		X
J707758G1	AS903	X	
L855111G1	BF964	X	X
M905757G1	CL908	X	X
L855545G1	FN907	X	X
L855536G6	FS9011	X	X
M905348G1	IA907	X	X
L855503G1	JP908		X
M905772G1	JP909	X	X
L855500G2	JP9010		X
M905490G2	PA9613	X	
M905490G3	PA9614		X
M905002G1	PL961	X	X
M905003G1	PL962	X	X
M905301G1 12 V M905301G2 24 V	PS902		
L855055G1	RC963	X	X
L855541G1	TR903	X	X
L855013G2	VR901	X	X
L855018G1	VR902	X	
A701453G5	XO905	X	X
A701453G11	XO906	X	X

CHAPTER
CHAPITRE
KAPITEL

2

Storno

Storno

TECHNICAL SPECIFICATIONS

STORNOMATIC 900

The listed specifications are measured and stated according to the NMT System Specifications.

GENERAL SPECIFICATIONS

Frequency Range
Transmit 453 - 457.475 MHz
Receive 463 - 467.475 MHz

Number of channels
180

Channel Separation
25 kHz

Mode of Operation
Duplex

Duplex Separation
10 MHz

SM9 Radio Unit Dimensions

Height	78.9 mm
Width	286 mm
Depth	376 mm

SM9 Control Head Dimensions

	L	GL	GLB
	SC91	SC92	SC93
Height	174 mm	212 mm	250 mm
Width	94 mm	94 mm	165 mm
Depth	32 mm	32 mm	35 mm

SP9 Radio unit with control head dimensions
34.3 x 304 x 155 mm

Temperature Range
Functional: $-25^{o}C$ to $+55^{o}C$
Storage: $-40^{o}C$ to $+70^{o}C$

RECEIVER SPECIFICATIONS

Frequency Range
463 - 467.475 MHz

RF Sensitivity, 20 dB SINAD CEPT
1 uV e.m.f.

Channel scanning detection
Selectable on control head
1 uV e.m.f.
or 3.2 uV e.m.f.
or 10 uV e.m.f.

Co-channel Rejection
less than 8 dB

Adjacent Channel Selectivity
greater than 80 dB

Intermodulation Rejection
greater than 70 dB

Spurious Response Rejection
greater than 70 dB

Blocking
greater than 90 dB/1 uV

Spurious Emissions
Radiated: Less than 2 nW
Conducted: less than -57 dBm

AF Output Power
10 W

AF Harmonic Distortion
less than 3%

Volume Control Range
8 steps covering approx. 40 dB

TRANSMITTER SPECIFICATIONS

Frequency Range
453 - 456.475 MHz

RF Power Output

Standard:	15 W ±1.5 dB
Medium power:	1.5 W ±3 dB
Low power:	0.15 W ±3 dB

Maximum Frequency Deviation
±4.7 kHz

Adjacent Channel Power
-70 dB

Spurious Emission
Radiated: 0.2 uW
Conducted: 0.2 uW

Harmonic Distortion in Transmission
less than 3%

RF Carrier Rise/Decay Time
less than 6 ms

POWER SUPPLY SPECIFICATIONS

SM9 Battery Voltage
10.8 - 15.6 V

Current Drain

Off:	<20 mA
Standby:	<0.8 A
Receive (5 W):	<2.4 A
Transmit (15 W):	<7.5 A

SP9 Power supply
12 V 9.5 Ah lead-acid battery

SP9 Charging time

	CHARGING TIME	
CHARGING SOURCE	RADIO ON	RADIO OFF
Lighter plug, max 3 A	14 hours	8 hours
Ext. Power supply 10 A	8 hours	8 hours
Mobile installation	8 hours	8 hours

Charging time are stated for a fully discharged battery.

CHAPTER
CHAPITRE
KAPITEL

3

Storno

GENERAL DESCRIPTION

INTRODUCTION

- The system is capable of automatic setting up and charging of calls both to and from a mobile station.
- Conversation between a mobile station and a fixed telephone in any of the four countries is possible.
- Conversation is possible in whatever base radio station area or in whichever Nordic country a mobile subscriber happens to be.
- Conversation between two mobile subscribers is possible whether they are in the same base station area or in different areas, even if these are in different Nordic countries.
- Using of a mobile telephone is similar to a telephone in the fixed network.
- The system permit automatic paging of a mobile subscriber and recording of the base station area in which he happens to be.
- The system ensure privacy of conversation.

SYSTEM DESCRIPTION

The NMT system is made up of the following component parts:

MTX (MOBILE TELEPHONE EXCHANGE)

The MTXs form the interface between the NMT system and the fixed telephone network. One of the functions of the exchanges is to compensate for the differences in telephone networks in the Nordic countries.

The MTX consists of a telephone exchange of AXE type suplemented by a Mobile Telephone Subsystem (MTS). MTS consists of both hardware and software.

The figure below shows a simplified block diagram of the MTX. It is controlled by a central processor system consisting of two processors (CPU-A and CPU-B) working in parallel synchronism. Via a data bus the processors communicate with a number of regional processors (RP) which control the operation in each subsystem.
The regional processors work in pairs and normally share the control of the various devices of a subsystem between them. If a fault occurs in one regional processor, the other takes its work over. The central processors continually scan the regional processors to collect informations and issue commands.

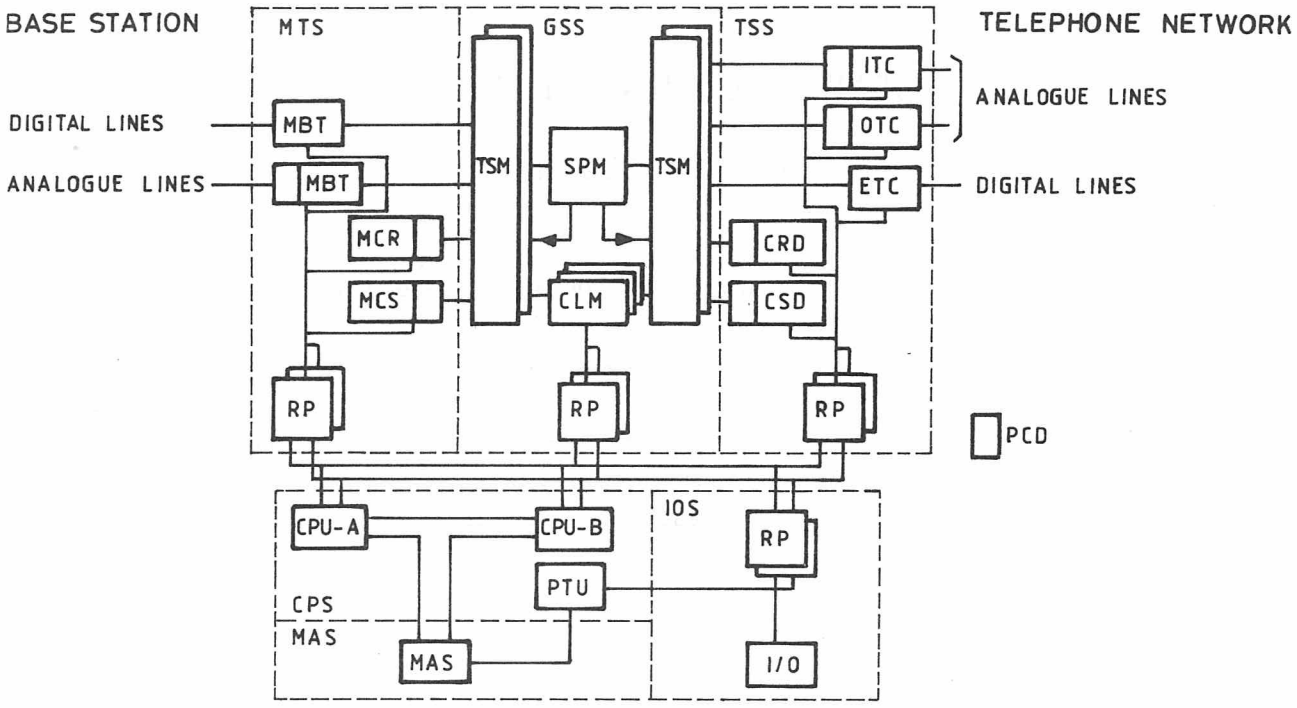

SUBSYSTEMS

GSS	Digital group switch subsystem
TSS	Trunk and signalling subsystem
MTS	Mobile telephone subsystem
CPS	Central processor subsystem
IOS	Input/Output subsystem
MAS	Maintenance subsystem

FUNCTION BLOCKS

TSM	Time switch module
SPM	Space switch module
CLM	Clock module
ITC	Incoming trunk circuit
OTC	Outgoing trunk circuit
ETC	Exchange terminal circuit
CRD	Code receiver device
CSD	Code sender device
MBT	Mobile signalling bothway trunk circuit
MCR	Mobile code receiver
MCS	Mobile code sender
PCD	Pulse code device
RP	Regional processor
CPU	Central processor unit
PTU	Processor test unit
MAU	Maintenance unit
I/O	Input/Output

BASE STATIONS

The base stations are intermediary links without switching function between the wire and radio transmission.
The base stations have different numbers of channel equipments depending on the volume of traffic in the area. The stations are successively extended in step with the growth of traffic. Tuning of radio channels is done from the MTX. This permit dynamic channel selection.
The base stations are built up of a number of function modules placed on 19" racks.

Transmitter
Power output 50 W

Receiver
Sensitivity - 2 dB (1 uV) e.m.f.

Control Unit (CU)
Controls the function of a transceiver. Contains a modem for signalling with MTX and circuits for generation of φ signal.

Supervisory Unit (SU)
Controls the function of the signal strength receiver. Contains a modem for signalling to MTX. Sends the result of the measurement to MTX.

Signal Strength Receiver (SR)
Measures the strength of a radio signal on the channel determined by the MTX.

Multiplexor
Distributes the received radio signals to the base station receivers.

Transmitter Combiner
Interconnects the signals from the base station transmitters to a common aerial.

RF Test Loop
Checks that the radio equipment is functioning satisfactorily.

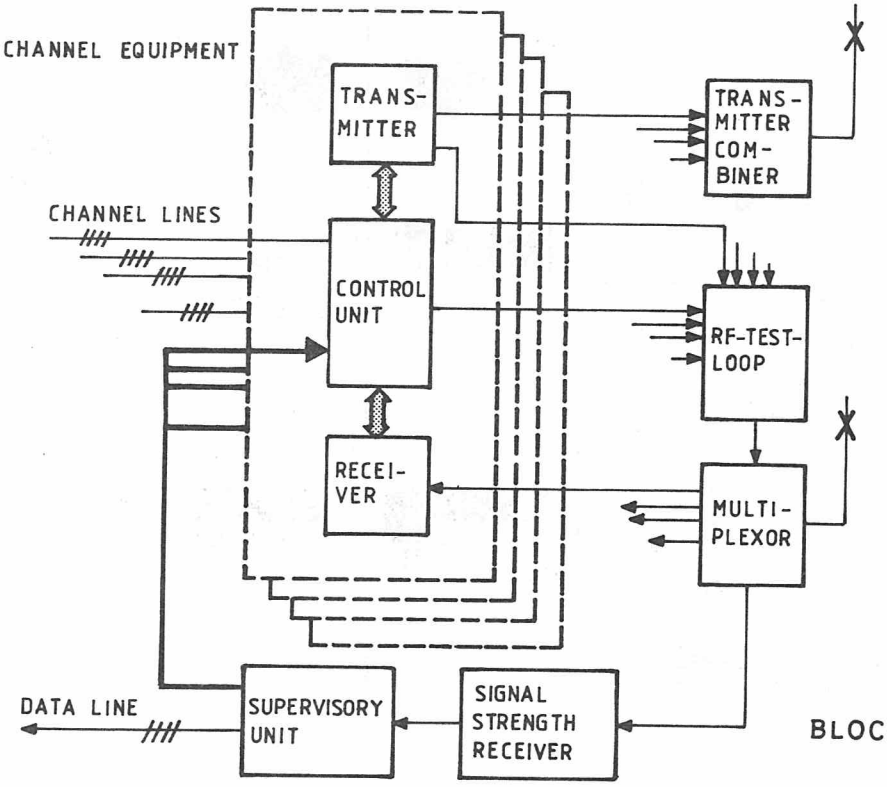

BLOCK DIAGRAM

MOBILE STATIONS

The mobile stations, i.e. the subscriber equipment (see the following chapters).

The drawing below shows the structure of the NMT system. Each country is divided into a number of traffic areas. In a traffic area there are a number of base stations spaced about 50 km apart. Each traffic area belongs to a single exchange. This means that all base stations in the area are connected to this exchange and that all traffic in the area is channeled through it. The exchange communicates with the telephone network via the trunk exchanges.

Every mobile subscriber is registered in a so-called home MTX, usually the MTX controlling the traffic area in which the subscriber normally resides.

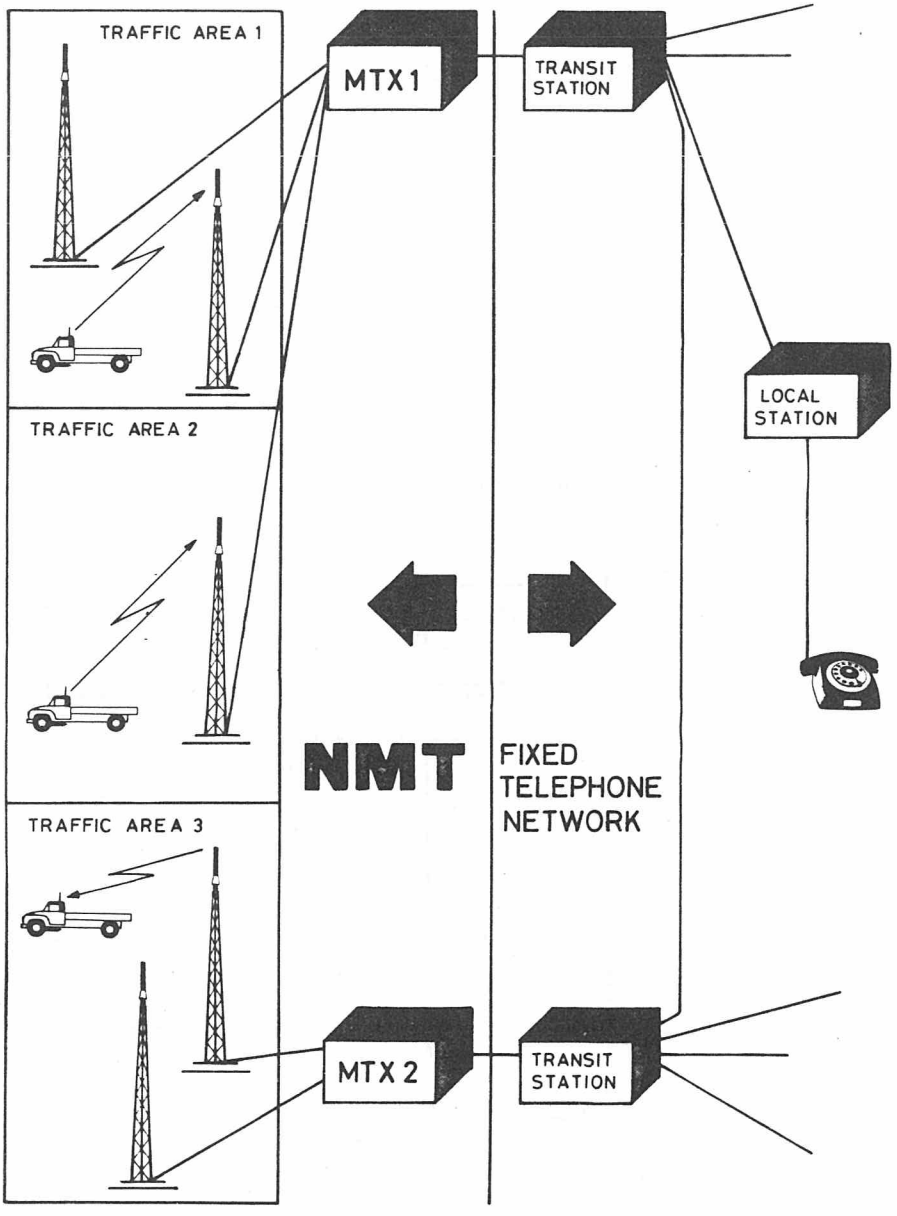

Storno

SYSTEM SIGNALLING

Many types of signal are used between the different parts of the NMT system. The signals have the following main objectives:

BETWEEN MTX AND MOBILE STATION

- Setting up and clearing of calls
- Switching of call in progress
- Updating
- Ordering of power-reduction

BETWEEN MTX AND BASE STATION

- Remote control of base station
- Transmission of alarm

BETWEEN TWO MTX

- Updating of subscriber register and roaming register
- Transfer of call to roaming subscriber

BETWEEN MTX AND TELEPHONE NETWORK

- Setting up of calls

BETWEEN BASE STATION AND MOBILE STATION

- Supervision of transmission quality

FRAMES

Signals are sent as so-called frames. All frames have the same length. They are divided into fields, each containing a given type of information. Two frame formats exist depending on whether the frame is sent to or from a MTX.

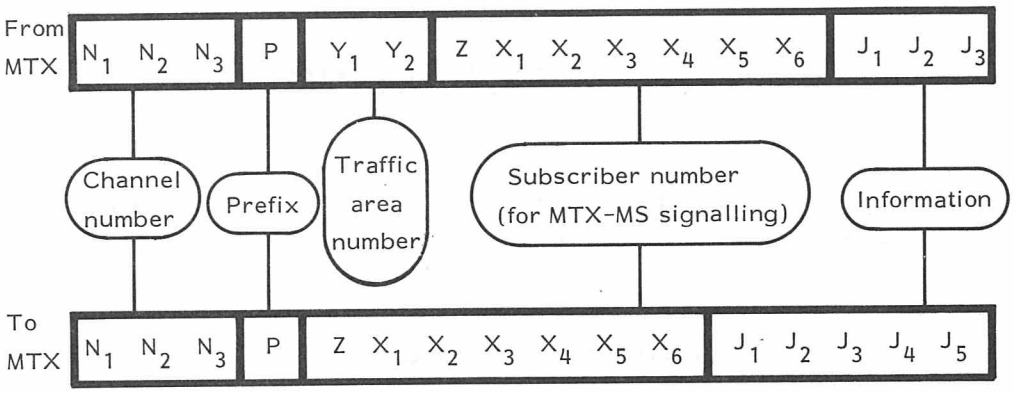

Each digit (N_1, N_2, N_3, P etc) consists of an hexadecimal code, i.e. four binary positions. All frames start with the channel number on which the frame is sent. If the number does not corresponds to the channel on which the receiver is locked, the frame is rejected. Faults due to intermodulation are thus avoided. The prefix P, defines the kind of message to which the frame relates. The actual message is found in the information field. When signalling from a mobile or from a MTX to a specific subscriber the mobile subscriber's number is always sent. It is also sent on signalling. Furthermore the MTX always sends the traffic area number of the base station in use.

Field without significance is filled with idle digits (J).

EXAMPLES OF SIGNAL FRAMES

Calling Channel Indication from MTX to mobile

N_1 N_2 N_3	C	Y_1 Y_2	J J J J J J J	J J J

The frame is recognized by the prefix P, which has the hexadecimal value C, i.e. 12 in the decimal system.
N_1 N_2 N_3 = number of the calling channel, on which the frame is sent.
Y_1 Y_2 = number of the traffic area in which the base station with calling channel number N_1 N_2 N_3 is situated.

Allocation of Traffic Channel

N_1 N_2 N_3	C	Y_1 Y_2	Z X_1 X_2 X_3 X_4 X_5 X_6	N_a N_b N_c

The frame is sent on the calling channel N_1 N_2 N_3. The mobile station ZX_1 X_2 X_3 X_4 X_5 X_6 to which a connection is to be set up is ordered over to traffic channel number N_a N_b N_c.

Transmission of identity on Traffic Channel, from mobile to MTX

N_1 N_2 N_3	1	Z X_1 X_2 X_3 X_4 X_5 X_6	J J J J J

Identity is sent on traffic channel N_1 N_2 N_3 by the mobile station ZX_1 X_2 X_3 X_4 X_5 X_6 either as acknowledgement of an identity request or as seizure signal on a call from the mobile station.

FRAME COMPOSITION

A frame consists of 4 x 16 = 64 bits. To increase the reliability the frame is sent with an error-correcting code, which result in a message length of 140 bits. An additional 15 + 11 bits are used for synchronization. The transmitted signal frame will have the following form:

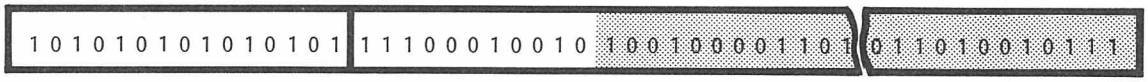

Bit synchronization | Frame synchronization | Message (example) 140 bits

- The selected error-correcting code is of convolution type and permits correction of error bursts with up to 6 false bits in sequence for at least 19 correct bits between error bursts.

The binary positions in the signal frames are transmitted by FFSK (Fast Frequency Shift Keying) modulation. Logic "1" is represented by a cycle of the frequency 1200 Hz and logic "0" by 1 1/2 cycles of 1800 Hz. Shift between "1" and "0" takes place at the zero passage of the signal. The data speed is thus 1200 bauds.

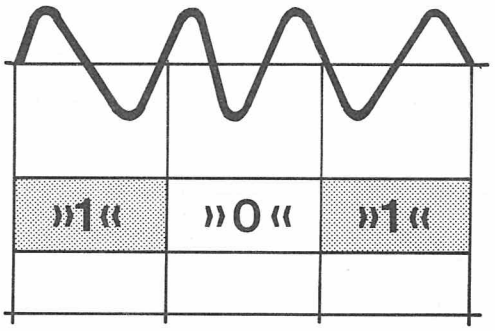

CALL FROM MOBILE SUBSCRIBER

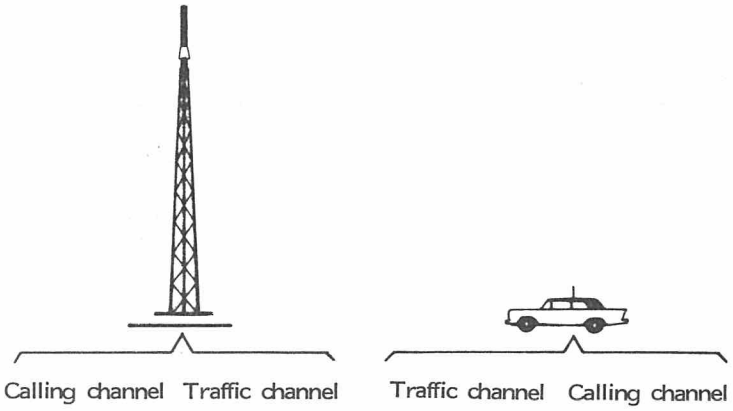

Initially the mobile is locked to the calling channel. The MTX sends the calling channel and "free traffic channel" indications over the base station.

The mobile subscriber keys the number and raises the handset.
The mobile station hunts for a free traffic channel and sends a seizure signal. The MTX answers by removing the "free traffic channel" indication.

Handshaking. The MTX requests renewed transmission of identity, which is done by the mobile station.

When the MTX is ready to receive the number, it sends a "proceed to send" signal.

The number stored in the mobile station's memory is sent.

The MTX acknowledges with the "number received" signal.

Through-connection in the MTX.
w signal is sent from the base station.

Called subscriber answers. Conversation takes place.

CONVERSATION

CONVERSATION

CALL TO MOBILE SUBSCRIBER

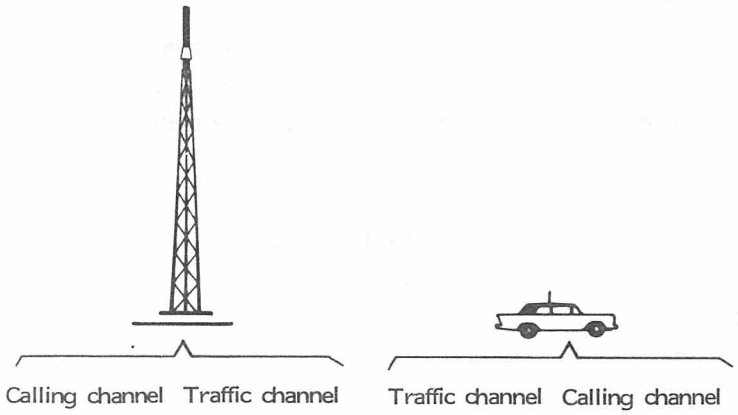

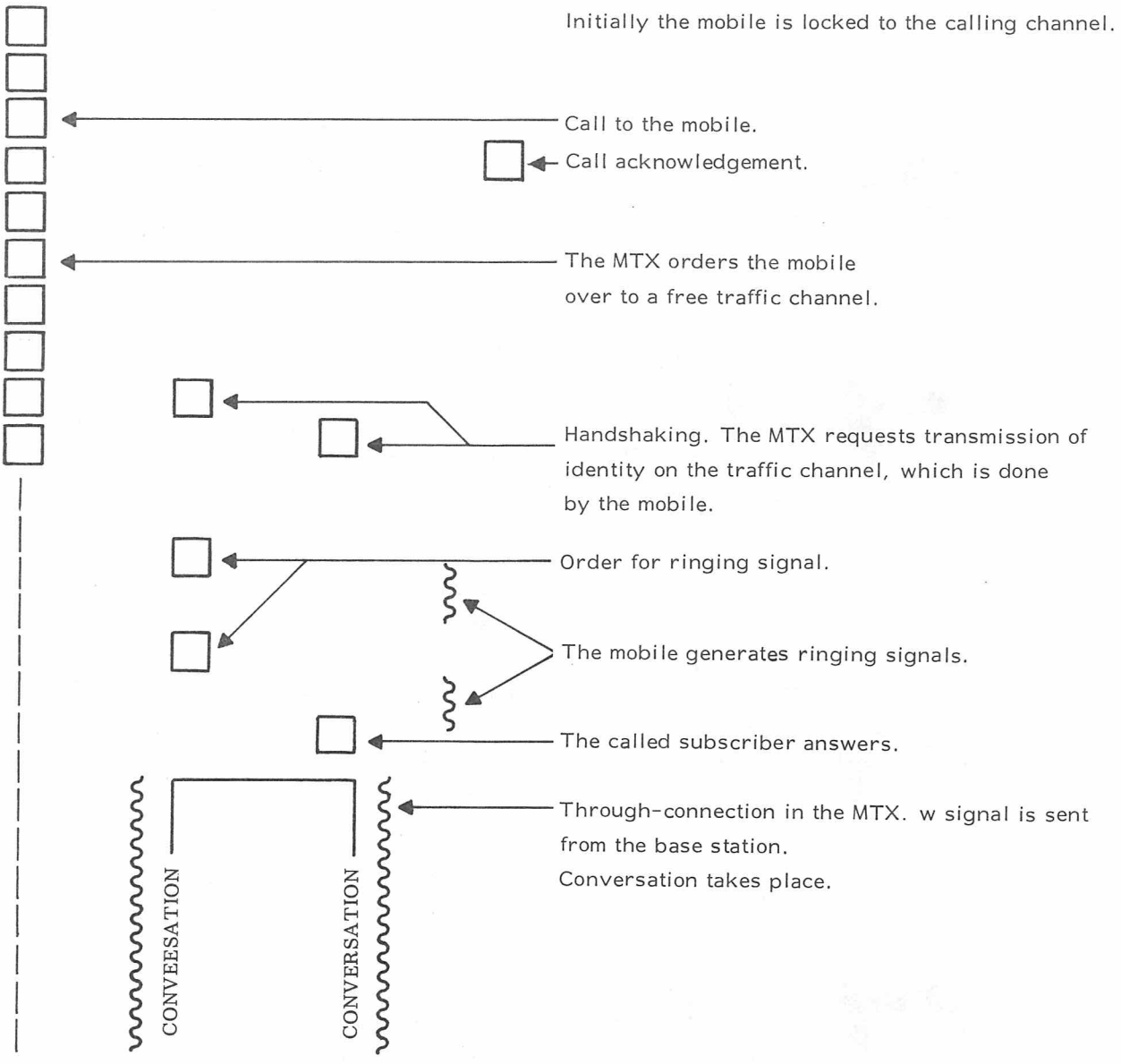

SWITCHING OF CALL IN PROGRESS

TRANSFER OF CALL TO OTHER BASE STATION

During a conversation it may happen that a mobile subscriber leaves the coverage area of the base station in which the conversation started. This results in impaired speech quality. The conversation should then be conducted over another base station.

The speech quality is supervised by means of a supervisory signal (φ signal) one of four tones around 4 kHz. The base station sends the φ signal to the mobile, which sends it back to the base station. The quality of the returned φ signal is measured in the base station and, if it is unsatisfactory, the base station transmits alarm to the MTX. The MTX then orders the base station and neighbouring base stations to measure the field-strength of the radio signal from the mobile. The base stations transmit the results to the MTX, which then switches the call to the base station with the best reception.

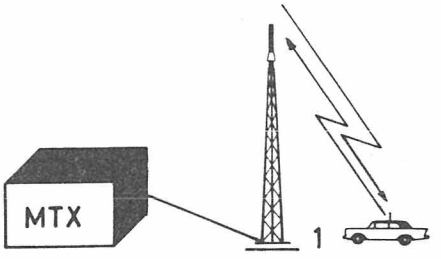

During conversation the base station sends a continuous supervisory signal which is returned by the mobile. The signal-to-noise ratio of the returned signal is measured in the base station and found satisfactory.

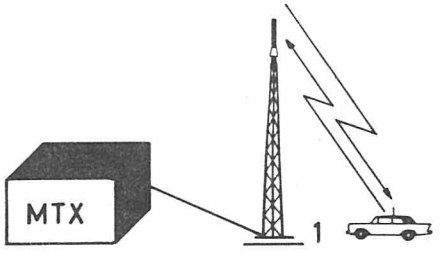

As the mobile moves further away from the base station the signal-to-noise ratio deteriorates. When a critical value is passed the base station sends alarm to the MTX.

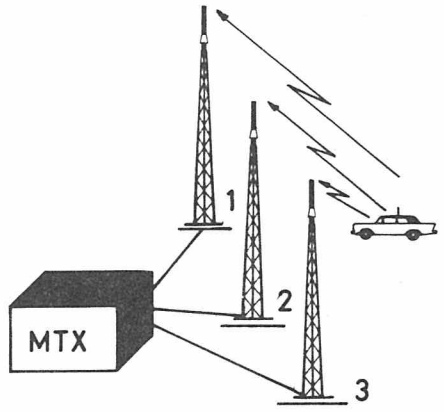

The MTX orders the actual and neighbouring base stations to measure the signal strength on the channel. The base stations return the results of the measurements to the MTX in the example illustrated, base station 3 measures a considerably higher signal strength than base station 1.

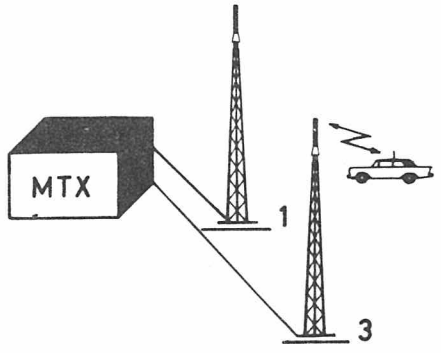

The MTX decides that the call must be switched to base station 3. The mobile is ordered over to another traffic channel and at the same time base station 3 starts a handshaking procedure on the same channel (call to mobile subscriber). Base station 1 is disconnected.
The mobile noticed the entire switching procedure is only as a brief interruption in the conversation.

ROAMING

The special function which enables a person to call a mobile subscriber without knowing where he is, is called roaming. One need not even know whether the mobile subscriber has gone to another Nordic country. Roaming is made possible by the fact that a mobile which leaves a traffic area and enters a new one automatically notifies the MTX that it has entered the new area. The location of the mobile is stored in its home-MTX and used for routing calls to the correct area.

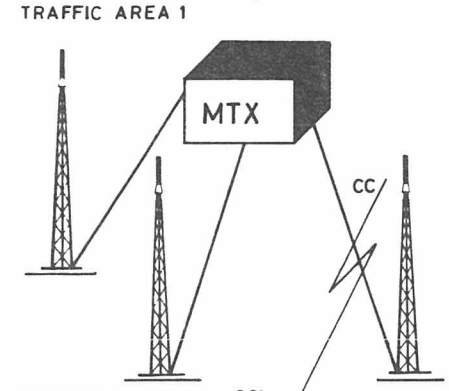

CC= calling channel
TC= traffic channel

Initially the mobile is locked to a calling channel in traffic area 1.
When the mobile moves out of the area, it loses contact with the calling channel. It then attempts first to find a new calling channel with the same traffic area number. If this fails, it goes hunting for a calling channel with arbitrary traffic area number.

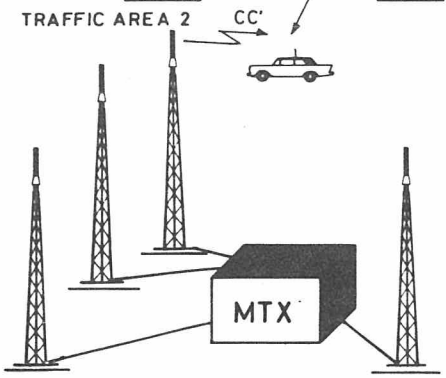

The mobile finds a calling channel with indication "traffic area 2". It must then make an updating call to inform the system that it has entered a new traffic area.

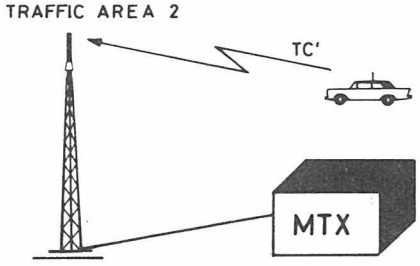

The mobile finds a free traffic channel. A frame for updating of roaming is sent. The MTX returns an acknowledgement.

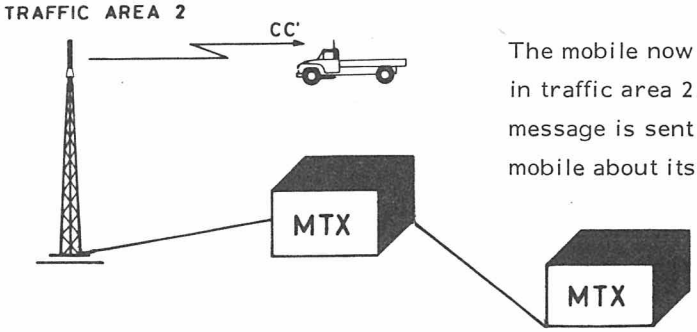

The mobile now locks to the calling channel in traffic area 2. From the MTX an updating message is sent to the home MTX of the mobile about its new position.

(mobile station's home MTX)

MODE OF OPERATION

SM/SP9663D025AP

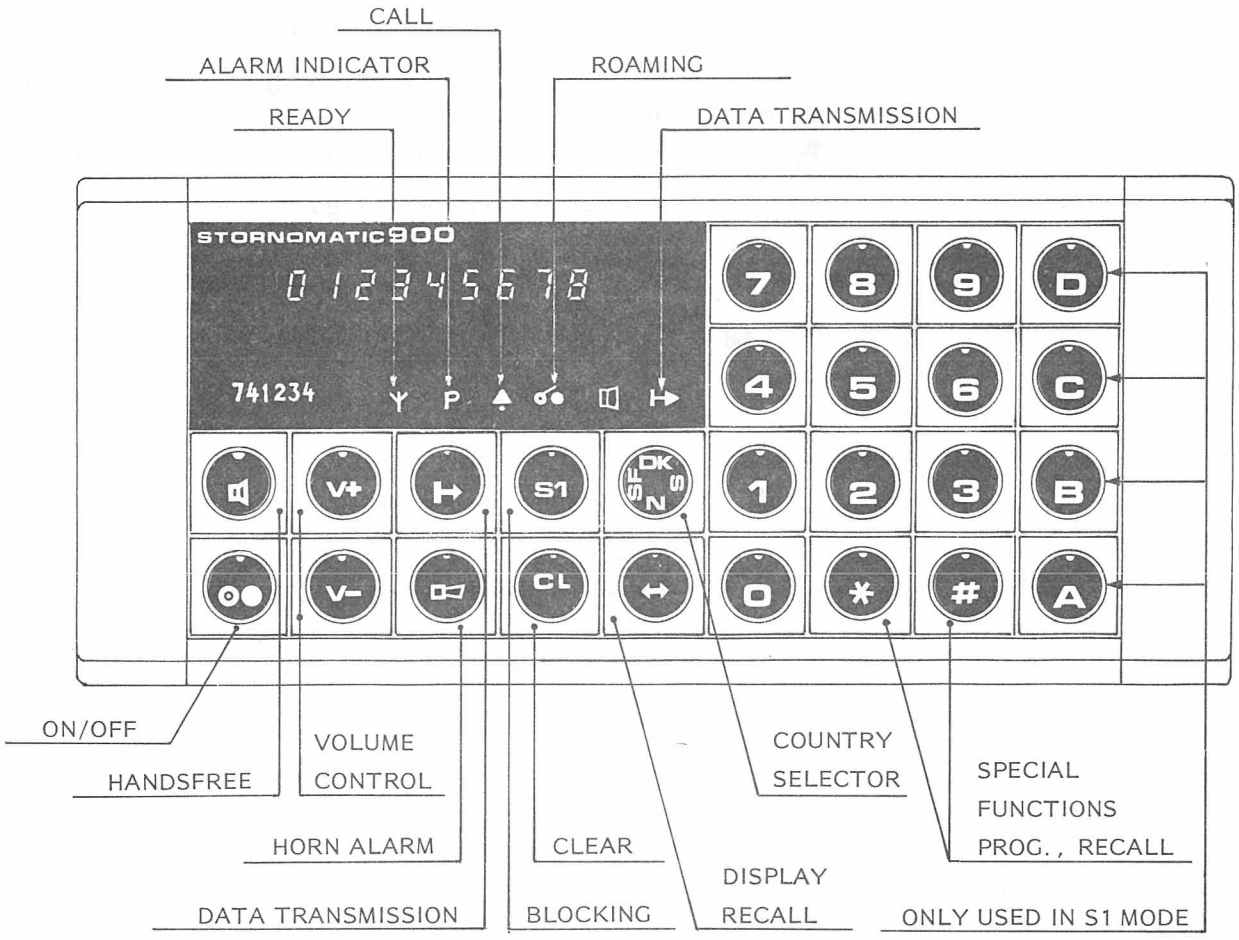

STORNOMATIC 900 CONTROL BOX FOR DENMARK AND NORWAY

M405.135

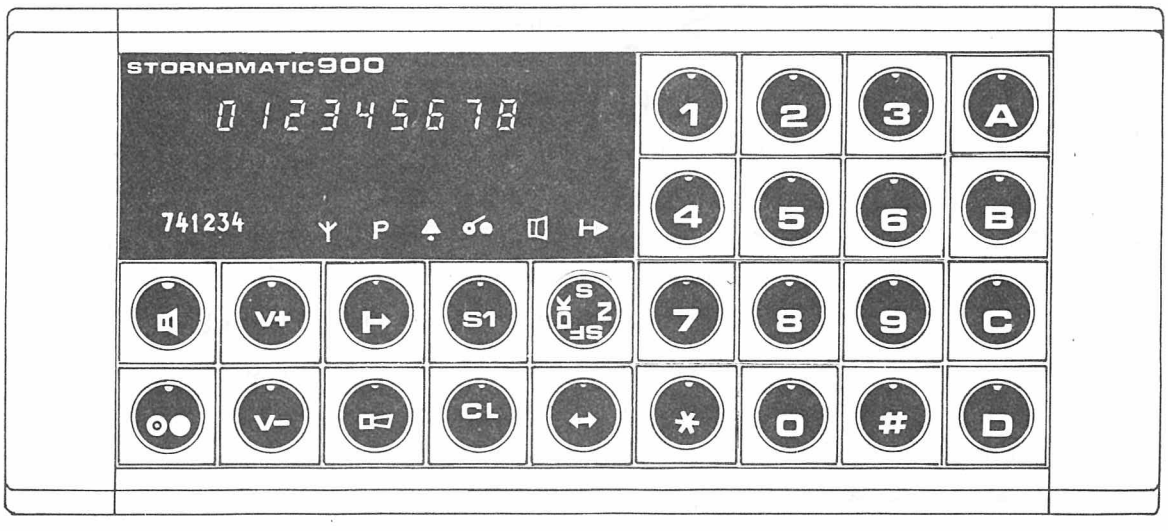

CONTROL BOX FOR SWEDEN/FINLAND STORNOMATIC 900

M405.137

ON/OFF	When the radio is switched on, the mobiles own telephonenumber appears shortly in the display, and the push buttons are lit from behind. The radio will automatically turn off 10 hours after the last conversation, provided the ignition switch is off.
HANDSFREE (HF)	Calls are initiated and ended by depressing provided the mobile telephone is equipped with a microphone and a loudspeaker. indicator turns on when microphone and loudspeaker are on.
VOLUME CONTROL	The loudspeakers volume level can be regulated up and down in eight steps.
DATA TRANSMISSION	Engages MFT generator in MTX for data signalling over telephone lines. turns on, when the data transmission push-button has been depressed.
HORN ALARM	For mobile telephones in parking mode, mounted with relay for horn/light alarm. The indicator turns on in connection with external alarm.
BLOCKING	The mobile telephones keyboard can be locked at two levels: I No calls allowed II Only register number calls allowed NB: ALARM CALLS ALWAYS POSSIBLE
DELETE BUTTON	Delete last incoded digit or function.
COUNTRY SELECTOR	The selector is a four position rotary switch. Must be set to the country in which you are presently and changed when arriving in an other country. Switching is don by depressing and turning the button.
DISPLAY FLIP	After dialling more than nine digits, a push on the display flip button makes the first digits to appear again on the display.
SPECIAL FUNCTIONS	For coding data and telefonnumbers. * and # is used for storing and recalling abbreviated numbers. * Pushed twice clear the display Note: * is displayed as H # is displayed as O
READY	Turns on when the mobile is in connection with the system and ready to communicate.
ROAM	The indicator turns on if the MTX have lost information about the mobile traffic area. Lift the microphone for a short time or push button twice.
CALLS	When the mobile receive a call, a ringing signal is heard and the call indicator is flashing.

ACOUSTIC SIGNALS

Ringing signal

Busy signal

CALL PROCEDURES

CALL FROM MOBILE

Enter the subscriber number on the keypad.
The number is displayed.
To delete the last digit entered, if miskeyed, push CL button.
To delete the complete number, push # twice.
Lift the handset or push if handsfree mode.
Y indicator turns off.
The display is cleared and the ringing signal is heard.
A call is terminated by replacing the handset or pressing the button in hands-free mode.
Y indicator turns on.
The mobile is ready for a new call.

If the call is not answered the first time, it may be reinitiated by pressing # . The last number entered will then be displayed and by lifting the handset or pushing , the call is transmitted.

If a telephone number has been entered on the keypad during a conversation, it can be recalled to initiate a call by depressing #.

CALL TO MOBILE

When a call is received, the indicator begins flashing and the acoustic alert turns on.
To answer the call, lift the handset or depress if handsfree mode.
After ended conversation, replace the handset or depress if handsfree mode.

If the call is not answered before the calling subscriber hang up, the call indicator will keep flashing. Lift the handset or push twice to turn it off.

SPECIAL FEATURES

ABBREVIATED NUMBERS

The radio is able to memorize up to 100 16 digits telephonenumbers in register 00 to 99.

The last number called is always stored in register 0 and a number stored during a conversation is always stored in register 00.

Storing

To store a number:
- press * then enter the register number (from 1 to 99).
- press * and enter the telephone number to be stored.

End the operation by pressing # and then *.

Deleting

A telephone number cannot be stored in a register where a number as already been stored, a beep in the loudspeaker indicates an error.

Press # and the stored number is displayed.
To delete it, press #, then enter the register number and push # and then *.
A new telephone number can now be stored in that register.

Recalling

To recall a stored telephonenumber, enter the register number (one or two digits) and push #.

The recalled telephonenumber is displayed and the call can be initiated as described previously.

BLOCKING MODE

Call possibility can be limited in two ways.
1 - no call possible from the mobile
2 - only call to registered telephonenumbers allowed

Blocking 1
Press S1 , enter the blocking code (any three digits number arbitrarily choosen).

To release the keyboard, press S1 , enter the same blocking code as for limiting.

Blocking 2
Press S1 , then # and enter the blocking code.
To release the keyboard, press S1 , then # and enter the same blocking code as previously.

When the radio is in blocking mode 1, any attempt to initiate a call "is" displayed by horizontal bars.

The same happens in blocking mode 2 for any attempt to call a telephone number not registered.

ANTENNA LEVEL

The strength of the received signal can be checked by pressing S1 and then A.
The display shows an "A" followed by a bar and a digit from 0 to 3:

as example: A-3

When digit three is displayed, the signal strength is optimal.

DATA TRANSMISSION

The NMT radio is able to transmit data.
The call to the modem (data receiver) is initiated as a normal call. After receiving the clear to receive signal, enter the message on the keyboard.
The message is displayed (max. 16 caracters).
Push ↦ to transmit.
The ↦ indicator turns on when there is connection to the exchange modem and the transmission starts automatically.

When the transmission is completed, the display is cleared, the exchange modem is automatically disconnected and the ↦ indicator turns off.

CHAPTER
CHAPITRE
KAPITEL

4

Storno

Storno

CL908

CONTROL LOGIC BOARD

The control board is the interface between the user and the radio system via the control box. CL908 performs all control functions of the radio as well as outgoing data signalling. The different functions are as follows:

Central control functions
- microprocessor
- I/O and external memories
- personality PROM
- modulator

Power circuits

RX/TX control

Other functions
- Autonomous timer
- Volume control
- Alert generator

CENTRAL CONTROL FUNCTIONS

The microprocessor used in CL908 is a single component 8-bit microcomputer, type 8031. It consists of a control oriented CPU with a 128 bytes RAM and 32 I/O lines (four 8-bits ports).

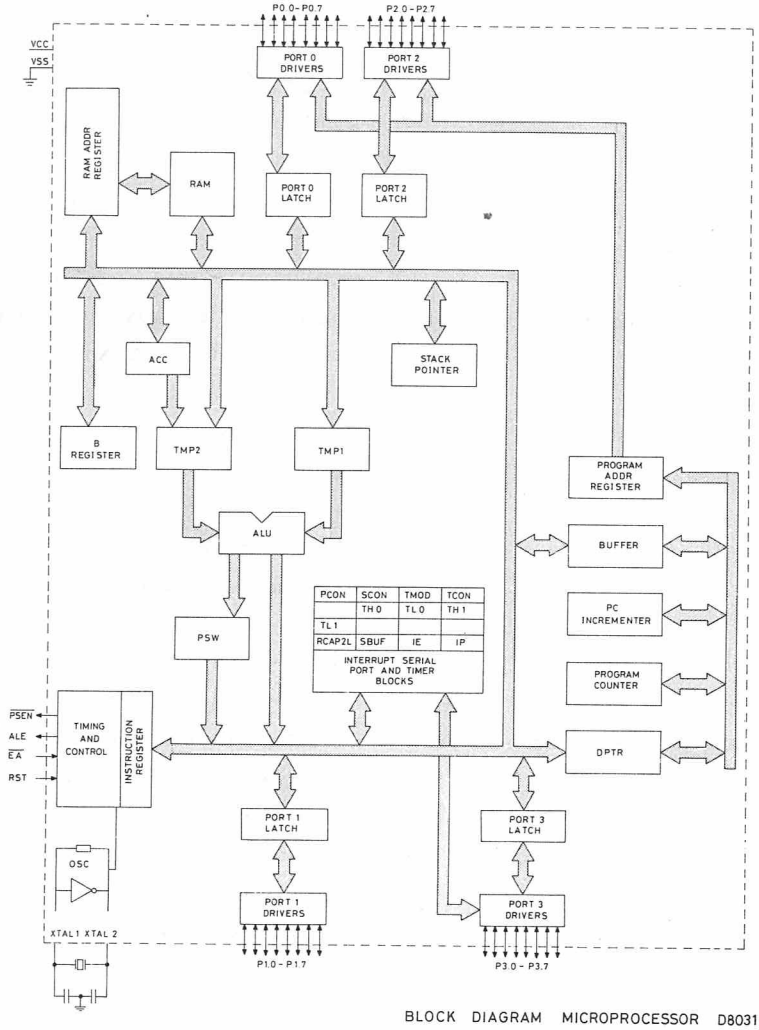

BLOCK DIAGRAM MICROPROCESSOR D8031 D403.372

MICROPROCESSOR OSCILLATOR
(U1, Y1 and associated components)

The internal oscillator is controlled by an external 11.0590 MHz crystal which gives an Ale frequency of 1.843 MHz. When the microprocessor is reading or writing in the external RAM, some of the ALe periods are missing, so in order to have a constant Ale frequency, the Ale signal is gated with the Read signal or the Write signal (U13a). The 1.843 MHz clock signal is transfered to divider U14 which divides by 8 and gives a 0.23040 MHz clock for the modem (U15).

INPUT/OUTPUT LINES

- FFSK I/O lines
- Data up/down between control logic and control box
- ON/OFF line for radio
- ON/OFF line for control box
- Incoming radio signals
- Outgoing radio control signals
- Channel frequency control
- External identity programming

EXTERNAL MEMORIES

The microprocessor uses three kinds of external memory:

- program memoires, U2 and U3
- RAM memory, U4
- PROM identity, U23

PROGRAM MEMORIES
(U2 and U3)

Memories from 2K bytes to 32K bytes can be used depending on the size of the desired program.

RAM MEMORY
(U4)

A 2K byte RAM is used. The RAM is adressed in parallel with the program memories. It is enabled during chip select, read and write operations. When the radio is connected to the car battery, the RAM is supplied with 5.6 V cont.. Data retention is assured, during power failure, by a back up battery (B1) placed on the CL board.

PROM CIRCUITS
(U23 and associated components)

The PROM used is a 256 x 4 bits memory where the mobile identity number has to be programmed. The circuit connected to output 1 of the identity PROM gives the possibility to program the PROM from the front connector.
The data flow between microprocessor and PROM is as follows:
Every times the CL is turned on, the microprocessor reads the PROM. If data in PROM are zeros or ones (depending of which PROM type is used where no identity number has been programmed) the microprocessor selects the identity programmed into the program memory PROM (U3). The microprocessor is reading the PROM by the data input/output line (To). Vcc (5V) and CE is applied to the PROM every time a new address has been set-up. When driver (U25) is active Q13 is off and thereby Q14 is inactive. Q16 is also off and thereby is Q17 in its active position. When data are read they are inverted by Q17 and sent to the microprocessor on the data I/0 pin (To). When a PROM is programmed with a new identity number the driver (U25) is off, then Q16 is active and thereby Q17 ineffective. So when a new identity has to be programmed into the PROM the data are sent from the microprocessor via the PROM I/0 line through Q14 which turns Q15 on when new data is programmed to a fixed address. The two program lines (Va and Vb) are connected to the front connector of the radio. They are used for two different high DC voltage required when a PROM has to be programmed.

LATCHES

There are five latches which transfers data to the microprocessor.

- input latch: U5 (8 bits)
- output latch: U6 (6 bits)
- output latch: U7 (8 bits)
- synthesizer output latch: U8 (8 bits)
- address latch: U9 (8 bits)
  (addr. program memories)

MODULATOR
(U15 and associated components)

The modulator is a Walsh function generator which converts the TX data input to 1200 Hz and 1800 Hz sinewaves, 1200 Hz for data = 1 and 1800 Hz for data = 0. A TX data enable signal causes the output signal to stop at medium level. This is important to avoid frequency jump when transmission is started and stopped. The C.B.S. (continuous bit synchronization) is normally connected to ground, but if it is connected to logic high, the modulator generates a signal with pattern 1:1.
The signal from the weighted Walsh network goes through a LP-section to the output amplifier. The amplification is adjustable with an external resistor. It is possible to change the synchronization time from 8 to 16 bits by changing the jitter control input from logic low to logic high. The used type of oscillator is a Pierce oscillator (parallel resonant). The oscillator consists of a single output and input, with a phase shift capacitor and the providing 180° phase shift in the feed-back loop. The start-up time of a Pierce oscillator is app. 1 second, but it draws very little current, and has a very good stability.

POWER CIRCUITS

POWER SUPPLY
(U21 and associated comp.)

As power supply for the control logic a 3 terminal voltage regulator is used which is switched on/off by Q8. Detect "on" status when control box signal (on/off signal) is 2 V.

RESET CIRCUIT
(U20c, U20d and associated components)

When power is turned on the circuit takes care of a high level on reset input of U1 in approximately 2.5 ms after 5 V (Vcc) has been supplied to the microprocessor.
If voltage drop (+A) below 7 V appears, the circuit also supplies the reset input of U1 with a high level.

POWER FAILURE
(U20b and associated components)

If a voltage drop on the power lines (A+) occurs the power failure circuit warns the microprocessor. Thereby it is possible for the microprocessor to keep actual condition (in RAM) and continue when the microprocessor voltage again is above 10.8 V. When the power failure circuit is in active position the control box can not turn off the radio.

RX/TX CONTROL

CARRIER DETECTOR
(U32 and sssociated components)

A voltage proportional to the RF input level of the receiver is applied to two non-inverting inputs. Thereby the microprocessor is able to detect the RF level on any channel. R66 is adjusted for +10 dBuV detect and R80 is adjusted for +20 dBuV detect.
The +10 dBuV detect circuit is temperature compensated.

DATA UP
(Q19 and associated components)

The data microprocessor line is designed to be terminated by a grounded base transistor. Its base is connected to +5 V potential (equal to Q20). When Q19 is off, a current of approximatily 0.5 mA is sourced through R45. If Q19 is on, the voltage defined by voltage divider R45 and R46 is sligthly below the 5.6 V needed to open the grounded base transistor in the receiver and of the line.

DATA DOWN

The data transmitter in the control box is nearly similar to the one described above, except that the current source resitor R49 (equivalent to R46) is placed in the receiver end. If the data down line is open, the current defined by R49 (0.5 mA) flows through Q20 and R48, RX data will then be at 0 V (RX data is inverted). If the data down line is grounded through a 10 kohm resistor (equivalent to data transmitter) the voltage will drop slightly under the threshold of Q20 which will turn off and RX data pin will be at 5 V.

TRANSMITTER DETECTION
(U26c and associated components)

If the transmitter goes on while the TX signal of the microprocessor is low (TX low indicate transmitter off), U26 will detect a malfunction and turn the radio off through Q5.

OTHER FUNCTIONS

AUTONOMOUS TIMER
(U30 and associated components)

The purpose of the autonomous timer is to detect improper function of the radio and consequently turn off. U30 is an oscillator/divider which, if not reset by the microprocessor, will set Q6 after approx. 30 sec. Q6 force then the on/off line low which turns the radio off after 1 sec.
There are two conditions defined as malfunctions:

1) The transmitter is on while no carrier is received.

2) The microprocessor does not make the reset pulse.

1) By gating the TX-level signal the squelch signal (-2dB) and the TX on/off signal (from microprocessor) it is possible to determine whatever the timer should be reset or not. To reject short RF bursts the squelch signal is delayed one second.

2) If the microprocessor does not make the reset pulse the radio is forced off.

VOLUME CONTROL
(R53, R54, R55 and associated components)

R53, R54 and R55 form a three bit D/A converter while R50, R51 and R52 pull outputs to 9 V when high.

ALERT GENERATOR
(U16b, R67 and associated components)

The alert frequency is 600 Hz, and is made by the TX clock of modem (U15) divided by 2 (U16).

Storno

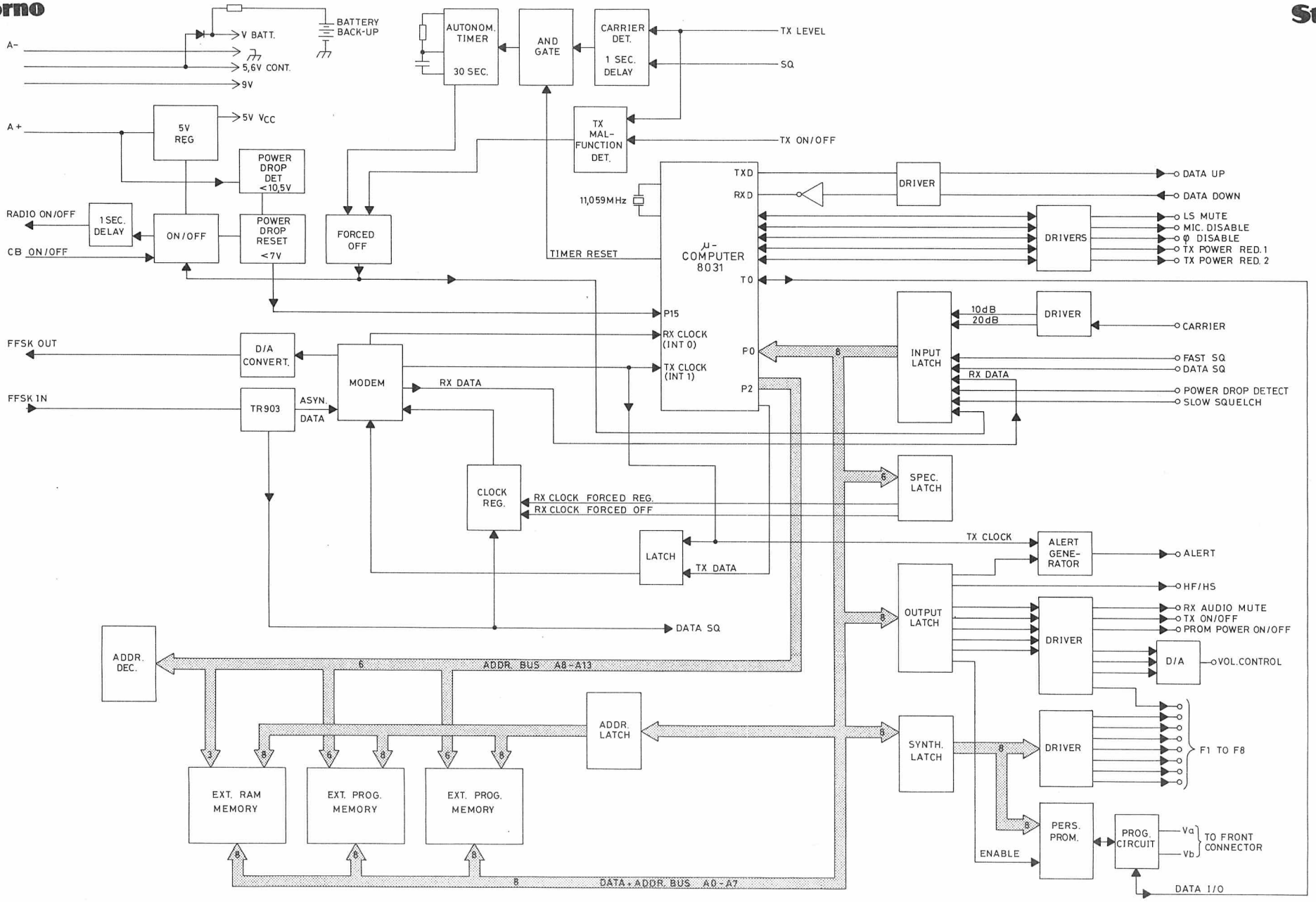

BLOCK DIAGRAM CL908

D403.745/3

Storno

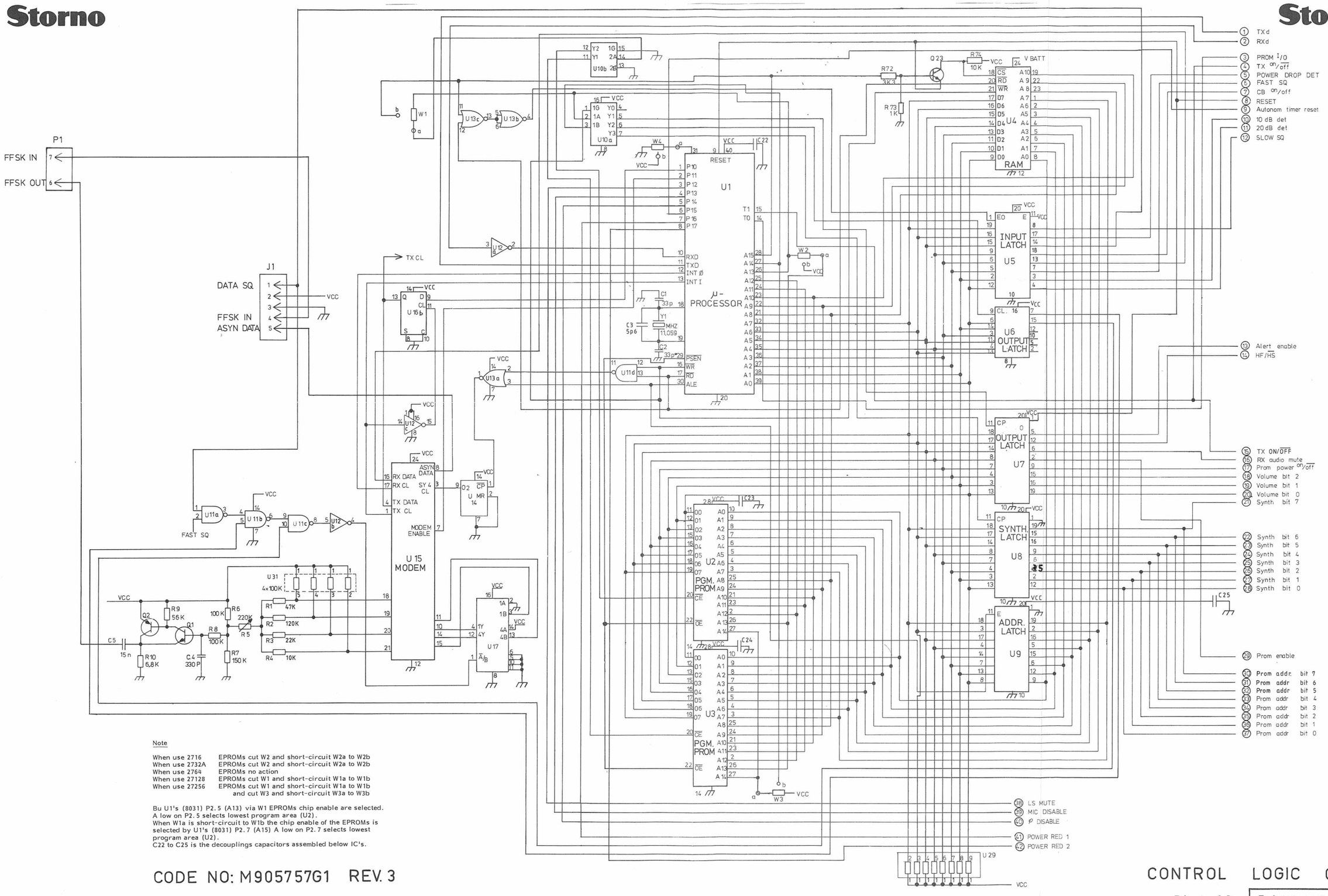

Note

When use 2716	EPROMs cut W2 and short-circuit W2a to W2b
When use 2732A	EPROMs cut W2 and short-circuit W2a to W2b
When use 2764	EPROMs no action
When use 27128	EPROMs cut W1 and short-circuit W1a to W1b
When use 27256	EPROMs cut W1 and short-circuit W1a to W1b and cut W3 and short-circuit W3a to W3b

Bu U1's (8031) P2.5 (A13) via W1 EPROMs chip enable are selected.
A low on P2.5 selects lowest program area (U2).
When W1a is short-circuit to W1b the chip enable of the EPROMs is selected by U1's (8031) P2.7 (A15) A low on P2.7 selects lowest program area (U2).
C22 to C25 is the decouplings capacitors assembled below IC's.

CODE NO: M905757G1 REV. 3

CONTROL LOGIC CL908

Sh 1of 2 D403.722/4

Storno

Storno

Txd Up ①
Rxd Down ②
Prom I/O ③
TX on/off ④
Power drop det. ⑤
Fast SQ ⑥
CB on/off ⑦
Reset ⑧
Auto. timer reset ⑨
10 dB det ⑩
20dB det ⑪
SLOW SQ ⑫
⑬
⑭

DRIVERS U25
DRIVERS U24
PERS. PROM U23
Prom enable ㉙
㉚ ㉛ ㉜ ㉞ ㉟ ㊱ ㊲
㊳ ㊴ ㊵ ㊶ ㊷

P1 20 F8 19 F7 18 F6 17 F5 16 F4 15 F3 14 F2 13 F1

P1 2 PRG Vb 1 PRG Va

P1 35 HF/HS 32 LS MUTE 21 MIC DISABLE 3 Ø DISABLE

P1 24 SLOW SQ 33 TX ON/OFF 29 RX AUDIO MUTE 30 VOL CONTR 28 ALERT

P1 31 TX POWER RED1 34 TX POWER RED2

P1 9 DATA DOWN 11 DATA UP

U 16 CLEAR TX CL.

U 15 TIMER RS RTC MR

U 30 30SEC.

U 32a U 32b P=Q36 Q37 Q6 Q4

U 26 a b c

U 20 a b c d

U 19 a b c

U 18 10K

U 27 10K

U 28 10K

U 22 22K

5,6 V cont

VCC 5V

5V REG. U 21

V batt

B1 2,4V

R 37 10 K
R 38 6K8
R 39 18 K
100 K
R 50 68K
R 59 1K
C 15 10µ
R 58 22K
C17 22n
R 65 4K7
R 61 10 K
R 79 10 K
C 19 470n
D7 2V7
R63 1K2
R 66 5K
R 64 22 K
R 80 5K
R 78 56 K
R 75 58K
NTC 15K
R 28 3K3
R 25 3K3
R 27 10K
R 24 6K8
R 26 560
R 40 100 K
R 23 4K7
R 22 2K2
R 21 100K
R 20 3K9
R 19 8K2
C7 1µ
R 18 150
C 20 220µ
C 21 220µ
L1
R17 1K5
R16 1K5
R 71 10K
D5 5,6V cont
C 16 470n
R 30 10 K
C9 10µ
R 32 10 K
R 33 10K
R 34 10 K
C 29 47µ
R 36 10 K
R 35 10 K
C8 15n
R 29 120K
R 31 100 K
R11 12K
C6 47µ
R15 1K
R14 68K
R 12 1K
R 13 3K3
D1
D4
Q3

P1 27 9V
12 5,6 V CONT
NC
10 5 V
8 GND

P1 23 TX LEVEL

P1 26 FAST SQ
25 CARRIER
5 VR ON/OFF
4 A+
22 ON/OFF CB

R 44 1K
R 41 560
D1
Q18
R 42 390
R43 5K6
C 10 0,47µ
C11 0µ22
Q15
Q14
Q13
Q17
Q16
R 45 10K
R 62 10 K
Q19
R 46 6K8
R 49 6K8
R48 47
C12 33n
C13 470n
R47 100
C14 10µ
R 69 220
R70 1K
D6
Q21
Q22
R50 R51 R52 10K 2K7
R53 68K
R54 33K
R55 15K
R56 12K
R57 27K
R 77 8K2
Q 24
R 67 56K
C17 22n
C 16 470n
Q 25
R 68 10 K
Q10
Q9
Q8
Q5
Q12
Q7
Q1
Q2

slukk er 5V cont ~ 3,5V C9; VR907 polvent

CONTROL LOGIC CL908

REV.3 CODE NO. M905757G1 Sh 2 of 2 D403.722/4

Storno

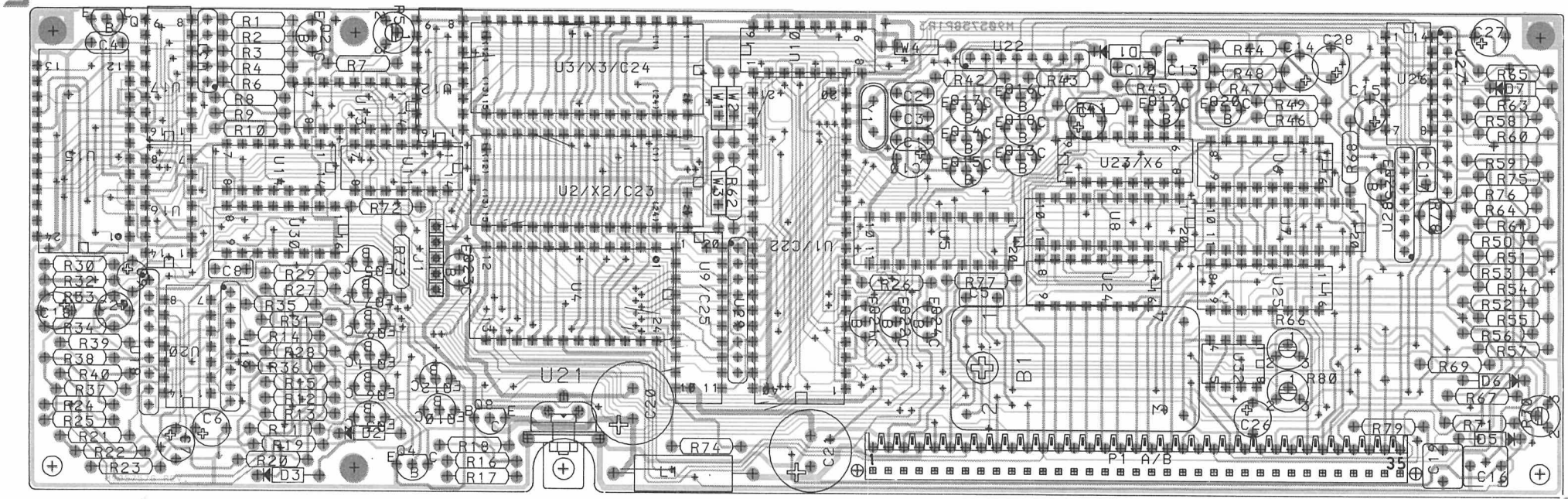

CONTROL LOGIC CL908
COMPONENT LAYOUT

REV.3 CODE NO. M905757G1 D403.703/4

Storno

Storno

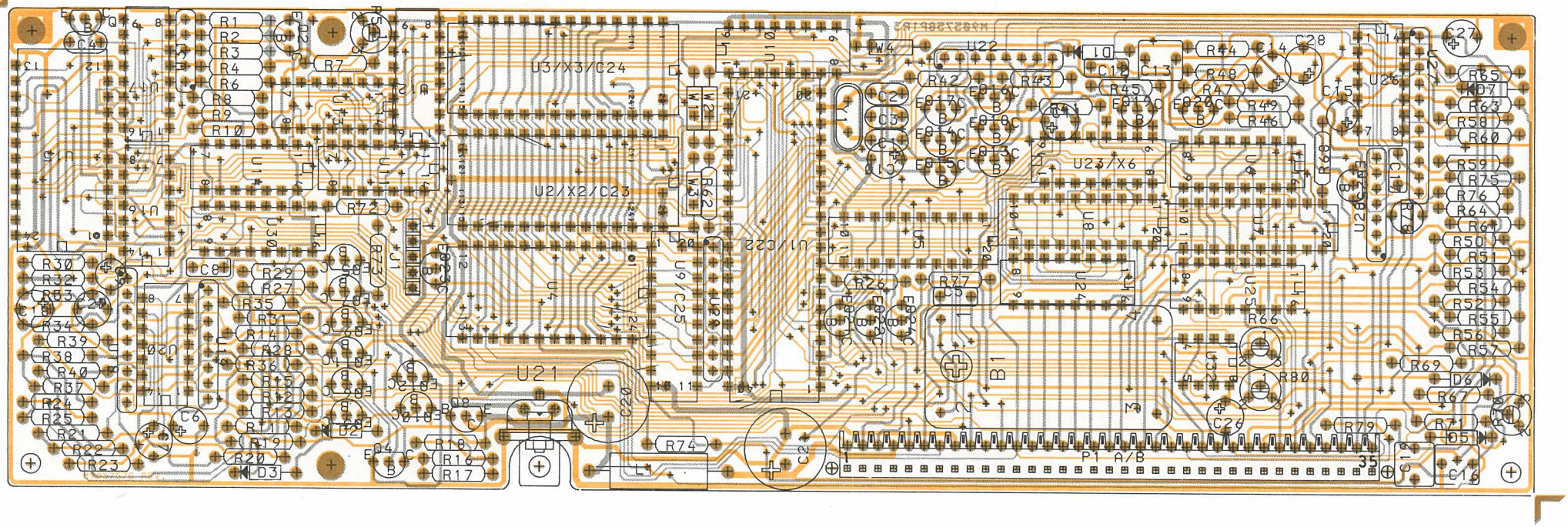

CONTROL LOGIC CL908
COMPONENT LAYOUT

REV.3 CODE NO. M905757G1 D403.703/4

ITEM NUMBER DESCRIPTION

M905757G1 CPNT BD PW CL 908, -REV. 3

P A R T S L I S T :

CIRCUIT POSITION	COMPONENT ITEM NUMBER	COMPONENT DESCRIPTION	QUANTITY TOTAL
B001	J706445P1	BTRY STOR NICD 2.4V	1
C001	A700235P19	CAP CER N150 33P 5% 50V	1
C002	A700235P19	CAP CER N150 33P 5% 50V	1
C003	A700235P10	CAP CER N150 5P6 5% 50V	1
C004	A700233P4	CAP CER 330P 10% 50V	1
C005	J707412P4	CAP PYES 15N 10% 63V	1
C006	J707353P9	CAP ELEC 47MF 16V	1
C007	A701534P4	CAP TA SOL 1U 20% 35V	1
C008	J707412P4	CAP PYES 15N 10% 63V	1
C009	A701534P7 *	CAP TA SOL 10U 20% 35V *	1
C010	A701534P3	CAP TA SOL 0U47 20% 35V	1
C011	A701534P2 *	CAP TA SOL 0U22 20% 35V *	1
C012	J707412P6	CAP PYES 33N 10% 63V	1
C013	J707412P13	CAP PYES 470N 10% 63V	1
C014	A701534P9	CAP TA SOL 47U 20% 35V	1
C015	A701534P7	CAP TA SOL 10U 20% 35V	1
C016	J707412P13	CAP PYES 470N 10% 63V	1
C017	J707412P5	CAP PYES 22N 10% 63V	1
C018	A701534P9	CAP TA SOL 47U 20% 35V	1
C019	J707412P13	CAP PYES 470N 10% 63V	1
C020	J706005P10	CAP ELEC 220U +100-10% 25V *	1
C021	J706005P10	CAP ELEC 220U 25V	1
C022	M905719G1	CAP THICK FILM	1
C023	L855508G1	CAP THICK FILM	1
C024	L855508G1	CAP THICK FILM	1
C025	L855507G1	CAP THICK FILM	1
C026	A701534P9	CAP TA SOL 47U 20% 35V	1
C027	A701534P9	CAP TA SOL 47U 20% 35V	1
C028	A701534P9	CAP TA SOL 47U 20% 35V	1
C029	A701534P9	CAP TA SOL 47U 20% 35V	1
D001	A700028P1	DIO SI SIG 1N4148	1
D002	A700028P1	DIO SI SIG 1N4148	1
D003	A700028P1	DIO SI SIG 1N4148	1
D005	A700028P1	DIO SI SIG 1N4148	1
D006	A700028P1	DIO SI SIG 1N4148	1
D007	A700025P2	DIO SI ZENR 2V7 5% 0,4W	1
J001	J706215P5	CONN MALE 5 PIN *	1
L001	A700000P123	COIL 10MH	1
P01A	A700041P9	CONN PWB FEM 10 CKT	1
P01B	A700041P23	CONN PWB FEM 25 CKT	1
Q001	J707511P1	TSTR NPN SI BC 548A/B	1

CIRCUIT POSITION	COMPONENT ITEM NUMBER	COMPONENT DESCRIPTION	QUANTITY TOTAL
Q002	J707674P1	TSTR PNP SI BC 558A/B	1
Q003	J707674P1	TSTR PNP SI BC 558A/B	1
Q004	J707511P1	TSTR NPN SI BC 548A/B	1
Q005	J707511P1	TSTR NPN SI BC 548A/B	1
Q006	J707511P1	TSTR NPN SI BC 548A/B	1
Q007	J707511P1	TSTR NPN SI BC 548A/B	1
Q008	J707435P1	TSTR PNP SI BC 369	1
Q009	J707511P1	TSTR NPN SI BC 548A/B	1
Q010	J707674P1	TSTR PNP SI BC 558A/B	1
Q011	J707674P1	TSTR PNP SI BC 558A/B	1
Q012	J707511P1	TSTR NPN SI BC 548A/B	1
Q013	J707511P1	TSTR NPN SI BC 548A/B	1
Q014	J707511P1	TSTR NPN SI BC 548A/B	1
Q015	J707674P1	TSTR PNP SI BC 558A/B	1
Q016	J707511P1	TSTR NPN SI BC 548A/B	1
Q017	J707511P1	TSTR NPN SI BC 548A/B	1
Q018	J707674P1	TSTR PNP SI BC 558A/B	1
Q019	J707511P1	TSTR NPN SI BC 548A/B	1
Q020	J707674P1	TSTR PNP SI BC 558A/B	1
Q021	J707511P1	TSTR NPN SI BC 548A/B	1
Q022	J707511P2	TSTR NPN SI BC 548 C	1
Q023	J707511P1	TSTR NPN SI BC 548A/B	1
Q024	J707511P1	TSTR NPN SI BC 548A/B	1
Q025	J707511P1	TSTR NPN SI BC 548A/B	1
R001	A700019P57	RES DEPC 47K 5% 1/4W	1
R002	A700019P62	RES DEPC 120K 5% 1/4W	1
R003	A700019P53	RES DEPC 22K 5% 1/4W	1
R004	A700019P49	RES DEPC 10K 5% 1/4W	1
R005	A700016P8	RES VAR CERM 200K 10% 1/2W	1
R006	A700019P61	RES DEPC 100K 5% 1/4W	1
R007	A700019P63	RES DEPC 150K 5% 1/4W	1
R008	A700019P61	RES DEPC 100K 5% 1/4W	1
R009	A700019P46	RES DEPC 5K6 5% 1/4W	1
R010	A700019P47	RES DEPC 6K8 5% 1/4W	1
R011	A700019P50	RES DEPC 12K 5% 1/4W	1
R012	A700019P37	RES DEPC 1K0 5% 1/4W	1
R013	A700019P43	RES DEPC 3K3 5% 1/4W	1
R014	A700019P59	RES DEPC 68K 5% 1/4W	1
R015	A700019P37	RES DEPC 1K0 5% 1/4W	1
R016	A700019P39	RES DEPC 1K5 5% 1/4W	1
R017	A700019P39	RES DEPC 1K5 5% 1/4W	1
R018	A700019P27	RES DEPC 150R 5% 1/4W	1
R019	A700019P48	RES DEPC 8K2 5% 1/4W	1
R020	A700019P44	RES DEPC 3K9 5% 1/4W	1
R021	A700019P25	RES DEPC 100R 5% 1/4W	1
R022	A700019P41	RES DEPC 2K2 5% 1/4W	1
R023	A700019P45	RES DEPC 4K7 5% 1/4W	1
R024	A700019P47	RES DEPC 6K8 5% 1/4W	1
R025	A700019P43	RES DEPC 3K3 5% 1/4W	1
R026	A700019P34	RES DEPC 560R 5% 1/4W	1
R027	A700019P49	RES DEPC 10K 5% 1/4W	1
R028	A700019P43	RES DEPC 3K3 5% 1/4W	1
R029	A700019P62	RES DEPC 120K 5% 1/4W	1
R030	A700019P49	RES DEPC 10K 5% 1/4W	1
R031	A700019P61	RES DEPC 100K 5% 1/4W	1

CIRCUIT POSITION	COMPONENT ITEM NUMBER	COMPONENT DESCRIPTION	QUANTITY TOTAL
R032	A700019P49	RES DEPC 10K 5% 1/4W	1
R033	A700019P49	RES DEPC 10K 5% 1/4W	1
R034	A700019P49	RES DEPC 10K 5% 1/4W	1
R035	A700019P49	RES DEPC 10K 5% 1/4W	1
R036	A700019P49	RES DEPC 10K 5% 1/4W	1
R037	A700019P49	RES DEPC 10K 5% 1/4W	1
R038	A700019P44	RES DEPC 3K9 5% 1/4W	1
R039	A700019P52	RES DEPC 18K 5% 1/4W	1
R040	A700019P61	RES DEPC 100K 5% 1/4W	1
R041	A700019P34	RES DEPC 560R 5% 1/4W	1
R042	A700019P32	RES DEPC 390R 5% 1/4W	1
R043	A700019P46	RES DEPC 5K6 5% 1/4W	1
R044	A700019P37	RES DEPC 1K0 5% 1/4W	1
R045	A700019P49	RES DEPC 10K 5% 1/4W	1
R046	A700019P47	RES DEPC 6K8 5% 1/4W	1
R047	A700019P25	RES DEPC 100R 5% 1/4W	1
R048	A700019P21	RES DEPC 47R 5% 1/4W	1
R049	A700019P47	RES DEPC 6K8 5% 1/4W	1
R050	A700019P49	RES DEPC 10K 5% 1/4W	1
R051	A700019P46	RES DEPC 5K6 5% 1/4W	1
R052	A700019P42	RES DEPC 2K7 5% 1/4W	1
R053	A700019P59	RES DEPC 68K 5% 1/4W	1
R054	A700019P55	RES DEPC 33K 5% 1/4W	1
R055	A700019P51	RES DEPC 15K 5% 1/4W	1
R056	A700019P50	RES DEPC 12K 5% 1/4W	1
R057	A700019P54	RES DEPC 27K 5% 1/4W	1
R058	A700019P53 *	RES DEPC 22K 5% 1/4W *	1
R059	A700019P37	RES DEPC 1K0 5% 1/4W	1
R060	A700019P59	RES DEPC 68K 5% 1/4W	1
R061	A700019P49	RES DEPC 10K 5% 1/4W	1
R062	A700019P49	RES DEPC 10K 5% 1/4W	1
R063	A700019P38	RES DEPC 1K2 5% 1/4W	1
R064	A700019P53	RES DEPC 22K 5% 1/4W	1
R065	A700019P45	RES DEPC 4K7 5% 1/4W	1
R066	A700016P3	RES VAR CERM 5K 10% 1/2W	1
R067	A700019P58	RES DEPC 56K 5% 1/4W	1
R068	A700019P49	RES DEPC 10K 5% 1/4W	1
R069	A700019P29	RES DEPC 220R 5% 1/4W	1
R070	A700016P1	RES VAR CERM 1K 10% 1/2W	1
R071	A700019P49	RES DEPC 10K 5% 1/4W	1
R072	A700019P43	RES DEPC 3K3 5% 1/4W	1
R073	A700019P37	RES DEPC 1K0 5% 1/4W	1
R074	A700019P49	RES DEPC 10K 5% 1/4W	1
R075	A700019P59	RES DEPC 68K 5% 1/4W	1
R076	A700019P58	RES DEPC 56K 5% 1/4W	1
R077	A700019P48	RES DEPC 8K2 5% 1/4W	1
R078	A701828P3	RES THERM NTC 15K 5%	1
R079	A700019P49	RES DEPC 10K 5% 1/4W	1
R080	A700016P3	RES VAR CERM 5K 10% 1/2W	1
U001	J707894P2	INT CKT, U-PROC.,SA- ,/TP8031,	1
U002	J708386G1	PROM CHIP ASM NMT CL 908	1
U003	J708387G1	PROM CHIP ASM NMT CL908	1
U004	J708092P1	INT CKT, CMOS-RAM,2KX8, I6116	1
U005	J707880P1	INT CKT, 74HC373	1
U006	A700029P53	IC DIG FF D 40174	1

CIRCUIT POSITION		COMPONENT ITEM NUMBER	COMPONENT DESCRIPTION	QUANTITY TOTAL
U007		J707880P2	INT CKT 74HC374	1
U008		J707880P2	INT CKT 74HC374	1
U009		J707880P1	INT CKT, 74HC373	1
U010		J708089P2	IC,DIG,DECO 74HC139	1
U011		J707879P2	INT CKT 74HC00	1
U012		A700176P1	IC DIG CMOS 4049 U	1
U013		J707879P1	IC DIG GATE 74HC02 HSCMOS	1
U014		A700029P18	IC DIG CNTR 4024	1
U015		J707117P2	INT CKT ULA MODEM	1
U016		A700029P9	IC DIG FF D 4013	1
U017		J708241P1	IC,DIG,MUX 74HC157	1
U018		J706216P13	RES NETW 7X10K 5%	1
U019		J706216P15	RES NETW 7X100K 5%	1
U020		J706018P1	IC LIN CMPAR 3302	1
U021		J706032P1	IC LIN VR POS 7805	1
U022		J706216P9	RES NETW 4X22K 5%	1
U023		J707417P2	IC PROM FUSE HM3-7611-5	1
U024		J706053P1	IC, DARL. TSTR ARR. MC 1413P	1
U025		J706053P1	IC, DARL. TSTR ARR. MC 1413P	1
U026		J706018P1	IC LIN CMPAR 3302	1
U027		J706216P17	RES NETW 10X10K 5%	1
U028		J706216P10	RES NETW 6X10K 5%	1
U029		J706216P13	RES NETW 7X10K 5%	1
U030		A700029P49	IC DIG CNTR 4060	1
U031		J706216P19	RES NETW 4X100K 5%	1
U032		J707450P1	IC LIN OP-AMP 358	1
W001		A700184P1	JUMPER WIRE	1
W002		A700184P1	JUMPER WIRE	1
W003		A700184P1	JUMPER WIRE	1
W004		A700184P1	JUMPER WIRE	1
X002	*	J706356P109	SOC IC L-PRF 28 CKT	1
X003	*	J706356P109	SOC IC L-PRF 28 CKT	1
X006		A700156P9	SOC IC,L-PRF 16 CKT	1
Y001		J706382P2	X-TAL 11,059MHZ	1
0008		J706804P1	WASHER INS XTAL WASH	1
0009		59.0049-00	B232901-HEAT SINK	1
0010		A700034P3	NUT HEX, M2.5 X 0.45MM	1
0011		J706076P4	WASHER,-SPG 2.5 X 5.9MM	1
0012		A700031P308	SCREW PAN HD. M2.5 X 8.0MM	1

Storno

TR903

DEMODULATOR

The TR903 is used with the control logic board CL908. TR903 is the FFSK demodulator of the incoming 1200 baud binary signalling. The data squelch is also placed on the TR903, the function of the data squelch is to detect 1200 baud FFSK binary signalling within 15 ms after a new channel has been sat up.

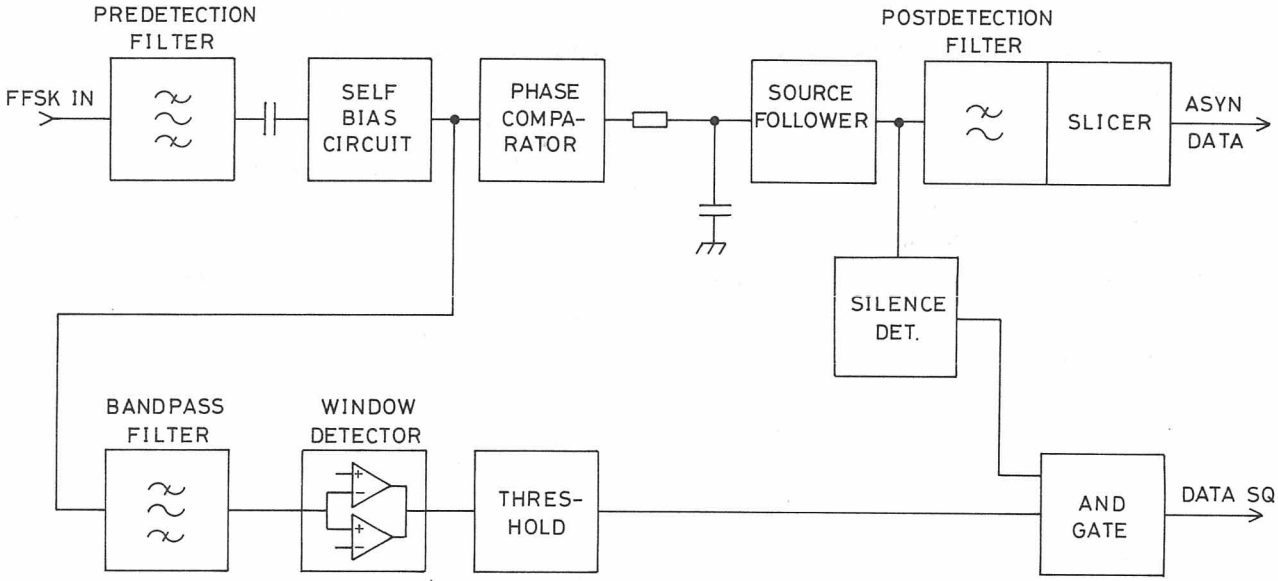

BLOCK DIAGRAM TR903
D403.736

CIRCUIT DESCRIPTION

DEMODULATOR

The two first amplifiers (U1b, U1c) form a bandpass filter as predetection filter, with one pole in the highpass end and three poles in the lowpass end. While the modulation frequencies are 1200 and 1800 Hz the bandpass is from 900 to 2100 Hz.

The phase shift networks R11-C6 and C7-R12 make the outputs of the two comparators (U2a, U2b) in quadrature to each other. When EX - OR'ed in U5b the output frequency will be twice the input frequency of the predetection filter.

The circuit U2c - U5c delays the signal from U5b by Td (70 us). When the delayed signal is EX - OR'ed in U5a with the original signal, a negative going pulse of the duration Td is generated at each transition. This means that we have a pulse train with constant pulse (Td) and a frequency four times the input frequency.
The average voltage of the pulse train is therefore porportional to the input frequency. U1a and U1d form a fourth order lowpass filter which extracts the DC value of the pulses. The output is compared in U2d to a reference DC voltage adjustable through R45 equal to the mean frequency of

the input frequencies. The output of the comparator U2d will then be asynchrone data.

DATA SQUELCH

The purpose of the data squelch is together with the ordinary squelch, to determine if FFSK 1200 baud signalling is received or not. The data squelch examines the FFSK demodulator in two points:

- by analysing the AF signal after the predetection filter.
- by checking for pressence of pulses out of the pulsewidth modulator.

AF signal analysis

The AF signal out of U1c is via the low pass branch of the phase shift network, fed to the bandpass filter U3a with F_0 - 300 Hz. The output is applied to the window detector U4a, U4b. Here speach and impulsive noise will pass while FFSK modulation is rejected.

U4d, U3d filter out short spikes when few.
When the output of the window detector goes low, U3b goes high and C18 charges through R34. U4d will not change until C18 has changed to the level set by R33 - U7 (1,3). This means that if the mean pulse duration is less than the ratio U7 (1,3)/R33, U4d will never change.
If sufficient noise is present to activate U4d, C21 will be changed through R36, D2 to approx. 2 V. This turns U3d low and hence the data squelch output low. When data occours, U4d goes low and C21 discharges through U6 pin 7.
After a delay U3d goes high. This turns Q1 on and C18 is discharged.

Pulse detector

If the demodulator is receiving data, pulses are present at the output of U5a. These are rectified by D3 and detected by U4c. The output is AND'ed to the output of U3d in U3c.
The output of the AND gate U3d is fed to CL908 as data.

Storno

Storno

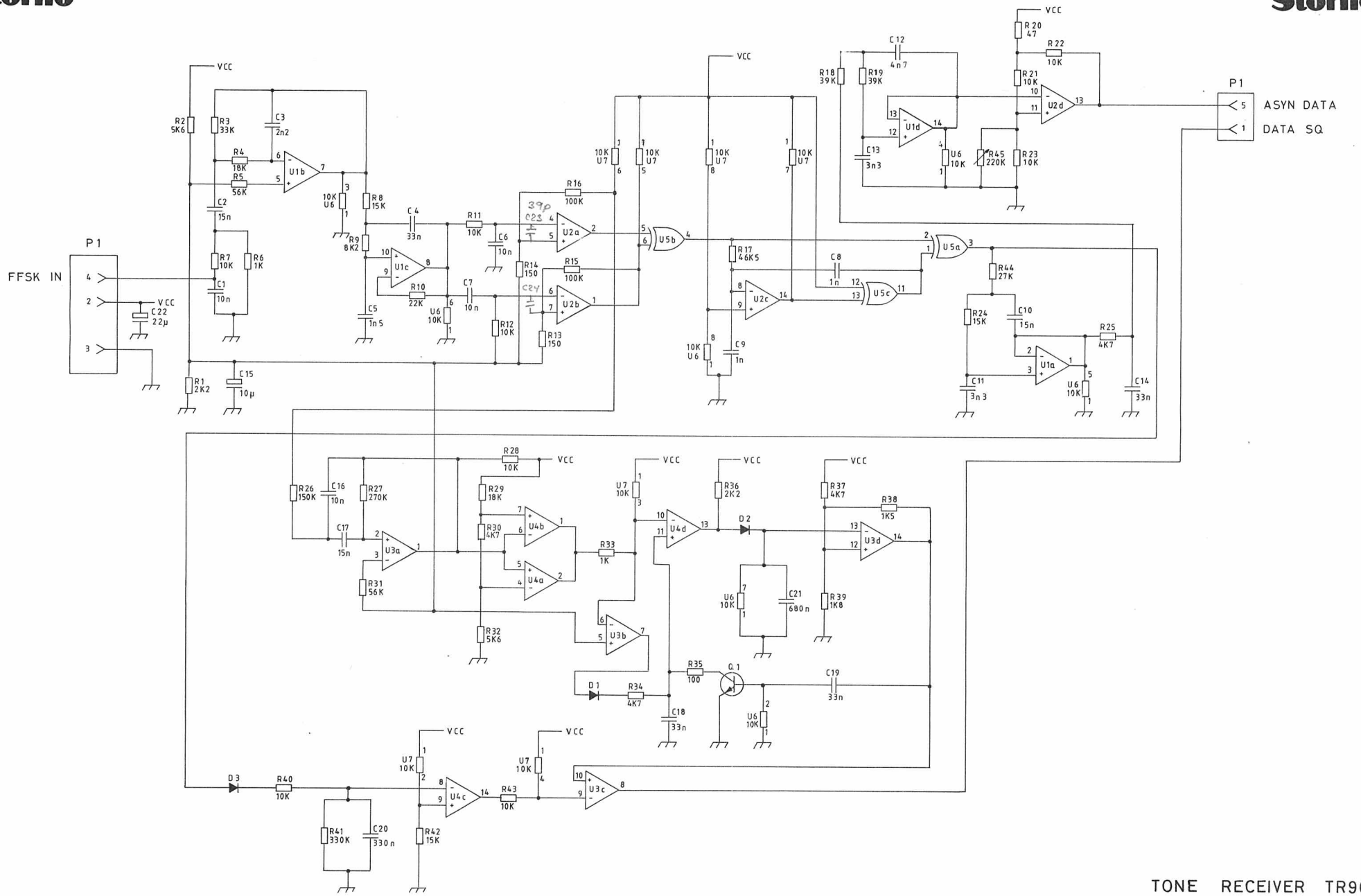

TONE RECEIVER TR903

CODE NO. L855541G1

D403.723/2/3

Storno

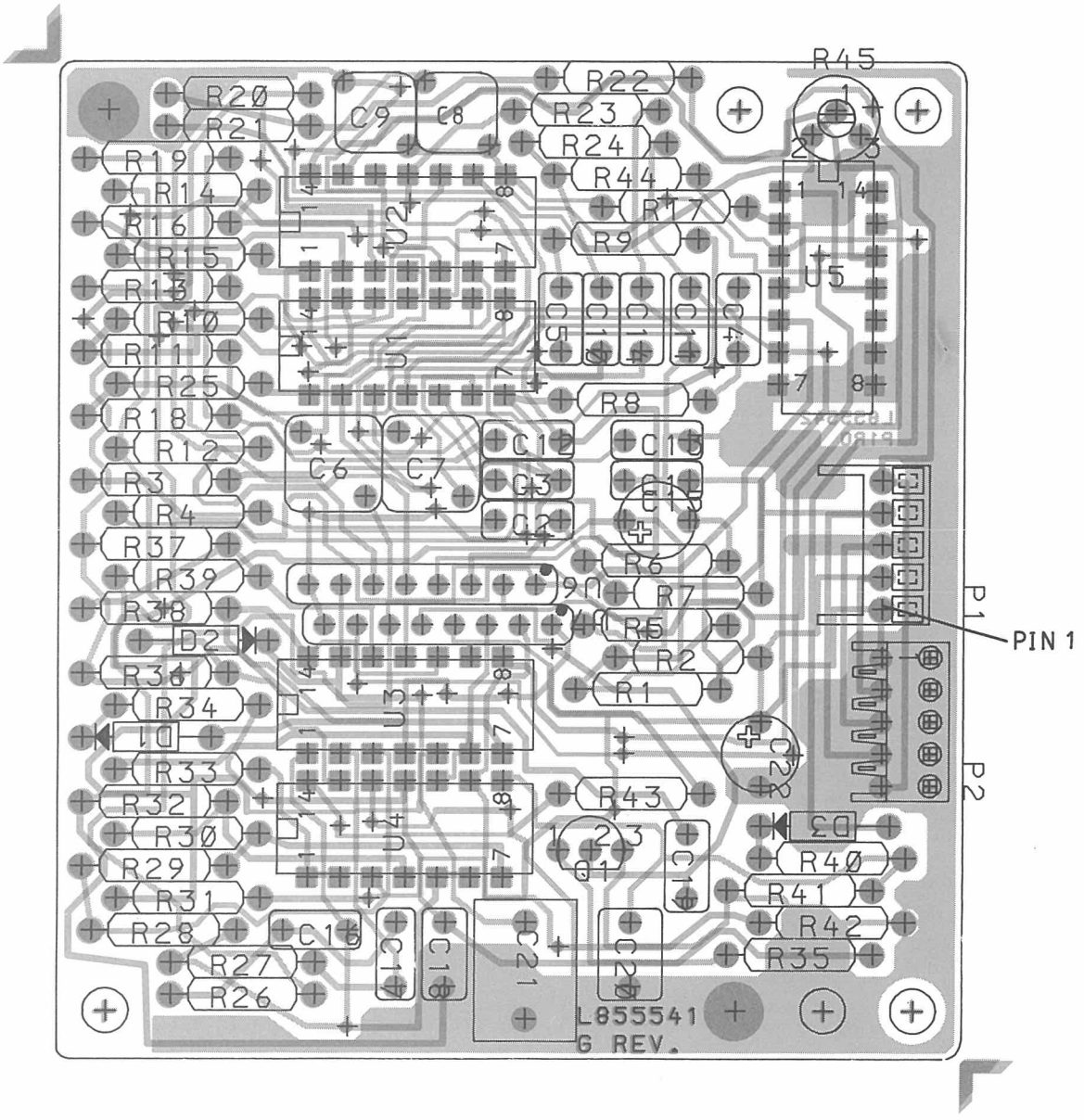

TONE RECEIVER TR903

COMPONENT LAYOUT

CODE NO: L855541G1

D403. 702

Storno

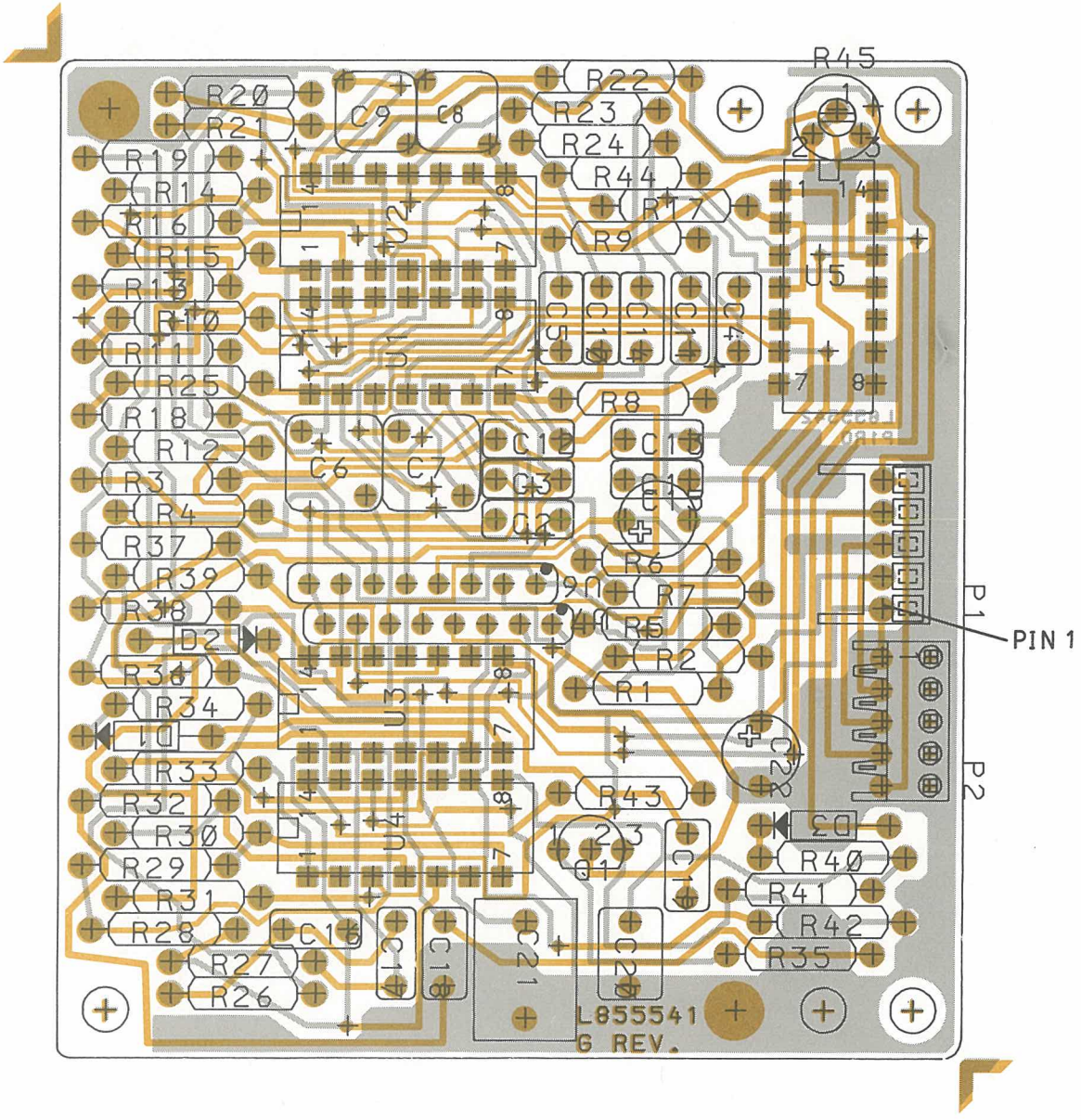

TONE RECEIVER TR903

COMPONENT LAYOUT

CODE NO: L855541G1

D403. 702

ITEM NUMBER DESCRIPTION

L855541G1 COMP BOARD PW TR 903, REV. 0

P A R T S L I S T :

	CIRCUIT POSITION	COMPONENT ITEM NUMBER	COMPONENT DESCRIPTION	QUANTITY TOTAL
	C001	J707412P3	CAP PYES 10N 10% 63V	1
	C002	J707412P4	CAP PYES 15N 10% 63V	1
	C003	A700234P3	CAP PYES 2N2 10% 50V	1
	C004	J707412P6	CAP PYES 33N 10% 63V	1
	C005	A700234P2	CAP PYES 1N5 10% 50V	1
	C006	J706217P3	CAP PYPRO 10 NF 63V	1
	C007	J706217P3	CAP PYPRO 10 NF 63V	1
	C008	J706217P1	CAP PYPRO 1 NF 63V	1
	C009	J706217P1	CAP PYPRO 1 NF 63V	1
	C010	J707412P4	CAP PYES 15N 10% 63V	1
	C011	A700234P4	CAP PYES 3N3 10% 50V	1
	C012	J707412P1	CAP PYES 4N7 10% 63V	1
	C013	A700234P4	CAP PYES 3N3 10% 50V	1
	C014	J707412P6	CAP PYES 33N 10% 63V	1
	C015	A701534P7	CAP TA SOL 10U 20% 35V	1
	C016	J707412P3	CAP PYES 10N 10% 63V	1
	C017	J707412P4	CAP PYES 15N 10% 63V	1
	C018	J707412P6	CAP PYES 33N 10% 63V	1
	C019	J707412P6	CAP PYES 33N 10% 63V	1
	C020	J707412P12	CAP PYES 330N 10% 63V	1
	C021	A700004P7	CAP PYES 680 NF 63V	1
	C022	A701534P8	CAP TA SOL 22U 20% 35V	1
*	C023	A700007P41	CAP CER 39 PF	1
*	C024	A700007P41	CAP CER 39 PF	1
	D001	A700028P1	DIO SI SIG 1N4148	1
	D002	A700028P1	DIO SI SIG 1N4148	1
	D003	A700028P1	DIO SI SIG 1N4148	1
	P001	A700041P54	CONN PWB FEM 05 CKT	1
	P002	A700041P4	CONN PWB FEM 05 CKT	1
	Q001	J707511P1	TSTR NPN SI BC 548A/B	1
	R001	A700019P41	RES DEPC 2K2 5% 1/4W	1
	R002	A700019P46	RES DEPC 5K6 5% 1/4W	1
	R003	A700019P55	RES DEPC 33K 5% 1/4W	1
	R004	A700019P52	RES DEPC 18K 5% 1/4W	1
	R005	A700019P58	RES DEPC 56K 5% 1/4W	1
	R006	A700019P37	RES DEPC 1K0 5% 1/4W	1
	R007	A700019P49	RES DEPC 10K 5% 1/4W	1
	R008	A700019P51	RES DEPC 15K 5% 1/4W	1
	R009	A700019P48	RES DEPC 8K2 5% 1/4W	1
	R010	A700019P53	RES DEPC 22K 5% 1/4W	1
	R011	A701250P301	RES MFILM 10K0 1% 1/4W	1
	R012	A701250P301	RES MFILM 10K0 1% 1/4W	1
	R013	A700019P27	RES DEPC 150R 5% 1/4W	1
	R014	A700019P27	RES DEPC 150R 5% 1/4W	1
	R015	A700019P61	RES DEPC 100K 5% 1/4W	1

CIRCUIT POSITION	COMPONENT ITEM NUMBER	COMPONENT DESCRIPTION	QUANTITY TOTAL
R016	A700019P61	RES DEPC 100K 5% 1/4W	1
R017	A701250P365	RES MFILM 46K4 1% 1/4W	1
R018	A700019P56	RES DEPC 39K 5% 1/4W	1
R019	A700019P56	RES DEPC 39K 5% 1/4W	1
R020	A700019P21	RES DEPC 47R 5% 1/4W	1
R021	A700019P49	RES DEPC 10K 5% 1/4W	1
R022	A700019P49	RES DEPC 10K 5% 1/4W	1
R023	A700019P49	RES DEPC 10K 5% 1/4W	1
R024	A700019P51	RES DEPC 15K 5% 1/4W	1
R025	A700019P45	RES DEPC 4K7 5% 1/4W	1
R026	A700019P63	RES DEPC 150K 5% 1/4W	1
R027	A700019P66	RES DEPC 270K 5% 1/4W	1
R028	A700019P49	RES DEPC 10K 5% 1/4W	1
R029	A700019P52	RES DEPC 18K 5% 1/4W	1
R030	A700019P45	RES DEPC 4K7 5% 1/4W	1
R031	A700019P58	RES DEPC 56K 5% 1/4W	1
R032	A700019P46	RES DEPC 5K6 5% 1/4W	1
R033	A700019P37	RES DEPC 1K0 5% 1/4W	1
R034	A700019P45	RES DEPC 4K7 5% 1/4W	1
R035	A700019P25	RES DEPC 100R 5% 1/4W	1
R036	A700019P41	RES DEPC 2K2 5% 1/4W	1
R037	A700019P45	RES DEPC 4K7 5% 1/4W	1
R038	A700019P39	RES DEPC 1K5 5% 1/4W	1
R039	A700019P40	RES DEPC 1K8 5% 1/4W	1
R040	A700019P49	RES DEPC 10K 5% 1/4W	1
R041	A700019P67	RES DEPC 330K 5% 1/4W	1
R042	A700019P51	RES DEPC 15K 5% 1/4W	1
R043	A700019P49	RES DEPC 10K 5% 1/4W	1
R044	A700019P49	RES DEPC 10K 5% 1/4W	1
R045	A700016P8	RES VAR CERM 200K 10% 1/2	1
U001	A701789P3	INT CKT LM224	1
U002	J706018P2	IC LIN CMPAR 239A	1
U003	A701789P3	INT CKT LM224	1
U004	J706018P1	IC LIN CMPAR 3302	1
U005	A700029P22	IC DIG GATE 4070	1
U006	J706216P11	RES NETW 7X10K 5%	1
U007	J706216P11	RES NETW 7X10K 5%	1

Storno

PERSONALITY PROM PROGRAMMING

STORNOMATIC 900

The telephone number is programmed into a prom which is a 4 x 256 Byte device. Part number is J706417P1.

The prom is divided into 8 blocks of data each consisting of 32 addresses. Each block can be programmed with a telephone number. When a new telephone number is to be programmed the next free block is used.

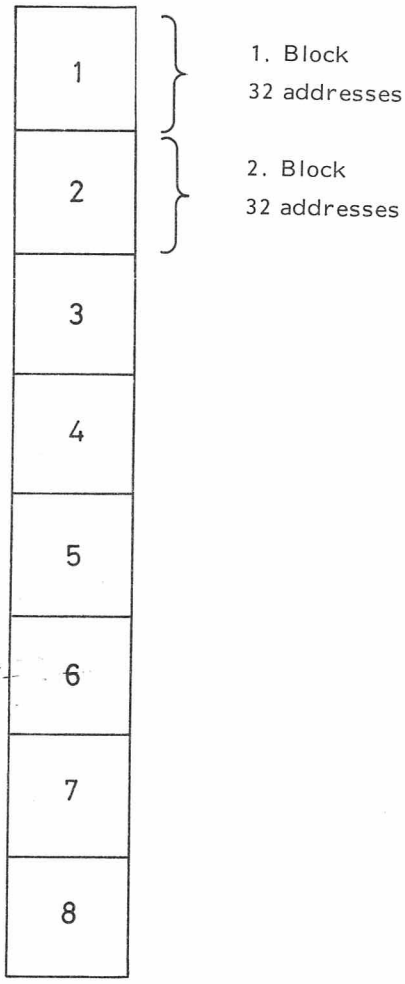

The telephone number digits are all converted to binary notation and each bit is inverted. The result is sequentially loaded into the addresses, the least significant digit located at the highest location. Each digit then occupies 4 addresses and because a telephone number consists of 7 digits 28 addresses are used. The last 4 bytes of a block is left unprogrammed, i.e. in the state of a fresh prom.

If a bit is 0 the corresponding address is programmed 0_H and if it's 1 then F_H.

When a prom is reprogrammed with a new telephone number the start address will be at the next free block, e.g. the first reprogramming in block 2, the second in block 3, etc. corresponding to addresses 20_H, 30_H and so on.

Example:

Telephone number: 5 92 11 06

	5	9	2	1	1	0	6	End of Block
binary digits	0101	1001	0010	0001	0001	0000	0110	xxxx
inverted bits	1010	0110	1101	1110	1110	1111	1001	xxxx

↑start of block — Address 00

End of block ↑ — Address 1F

Address		Data (Hex)	
00	=	F	5
01	=	0	
02	=	F	
03	=	0	
04	=	0	9
05	=	F	
06	=	F	
07	=	0	
08	=	F	2
09	=	F	
0A	=	0	
0B	=	F	
0C	=	F	1
0D	=	F	
0E	=	F	
0F	=	0	
10	=	F	1
11	=	F	
12	=	F	
13	=	0	
14	=	F	0
15	=	F	
16	=	F	
17	=	F	
18	=	F	6
19	=	0	
1A	=	0	
1B	=	F	
1C	=	x	End of block
1D	=	x	
1E	=	x	Invert unprogrammed
1F	=	x	state

E-PROM PROGRAMMING

STORNOMATIC 900

4 bytes in the upper part of the E-prom in which the program is stored have been reserved for programming of the telephone number.

IMPORTANT

Only these four addresses must be programmed. Any change in the program codes will impair the program execution and could cause damage to the radiotelephone.

Telephone programming area

	Address (Hex)	DATA	
TOP OF PROM ↑	$1FF3_H$	7. digit	Always 0
	$1FF2_H$	5. digit	6. digit
	$1FF1_H$	3. digit	4. digit
	$1FF0_H$	1. digit	2. digit

Example

Telephone number 5 92 11 06

Address

$1FF0 = 59_H$

$1FF1 = 21_H$

$1FF2 = 10_H$

$1FF3 = 60_H$

DATA SIGNALLING

BETWEEN CONTROL HEAD AND CONTROL LOGIC

The control signals between the radio's control logic and the control head are transmitted as data telegrams on two conductors in the control cable, one in each direction. Telegrams transmitted from the radio to the control head are disignated DATA UP and from the control head to the radio DATA DOWN. A common conductor in the cable is LOGIC GROUND and used exclusively as such.

TELEGRAM FORMAT

Each telegram consists of a start bit, a stop bit and eight data bits.
The control logic processor has a built-in UART (Universal asyncroncous receiver-transmitter) and in the control box a software UART is part of the processor program.
The signalling speed is 300 Baud full-duplex.

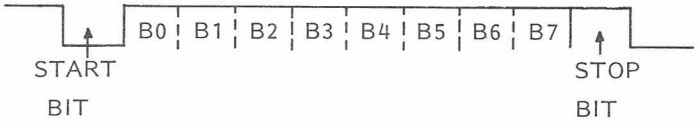

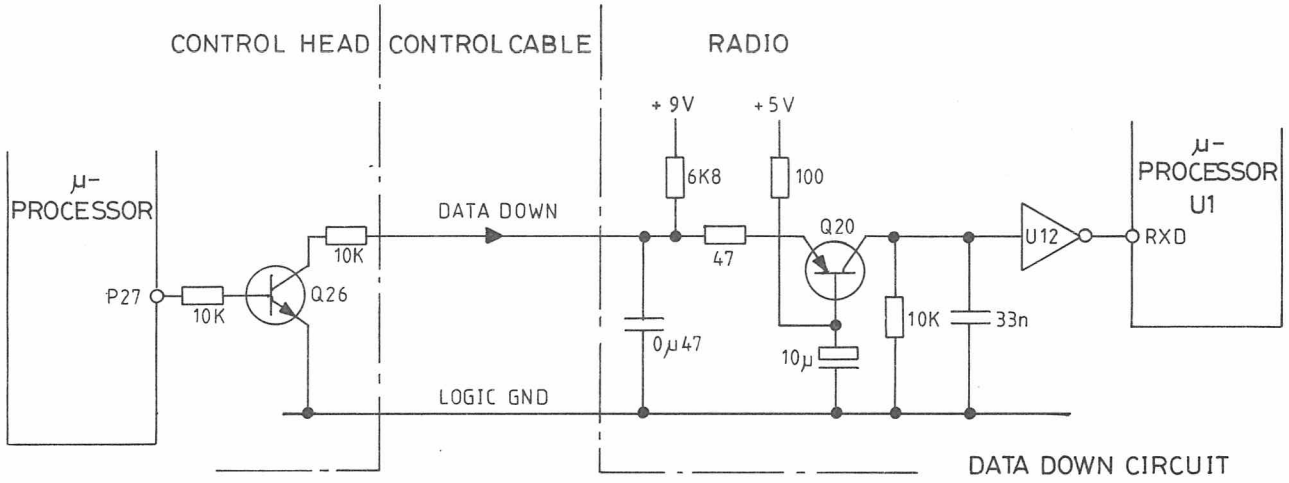

D403.750/2

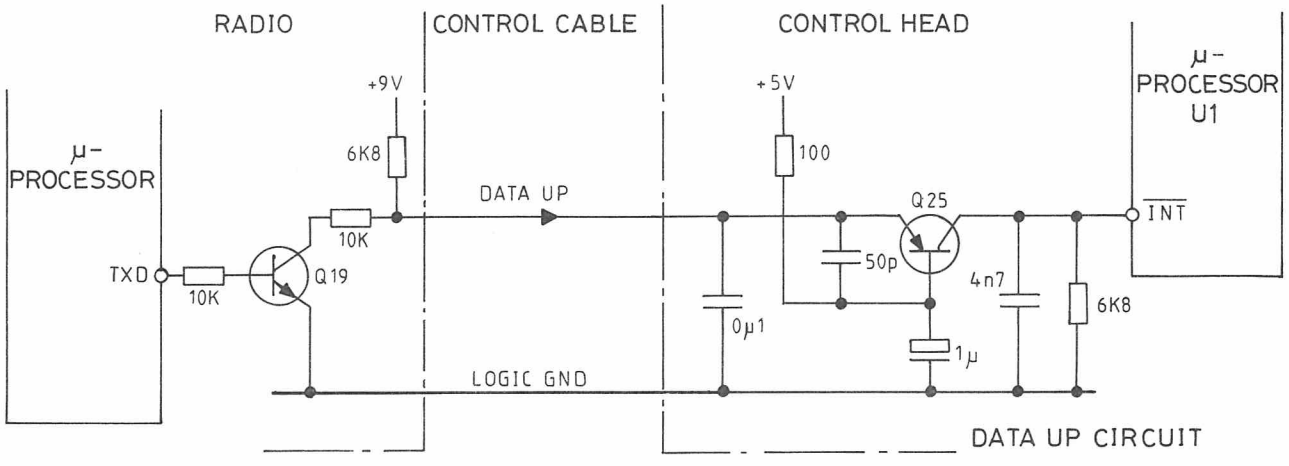

Data are transmitted as ASCII characters, one character per command, the first character identifying the type of information.

character Set, from Control Box to Radio:

Pushbuttons, Digits Select:

0-button	30_H
1-button	31_H
2-button	32_H
3-button	33_H
4-button	34_H
5-button	35_H
6-button	36_H
7-button	37_H
8-button	38_H
9-button	39_H
A-button	$3A_H$
B-button	$3B_H$
C-button	$3C_H$
D-button	$3D_H$
* -button	$3E_H$
# -button	$3F_H$

Pushbuttons, Command Keys:

cancel-last-entry	50_H
hands-free-button	51_H
volume-up-button	52_H
volume-down-button	53_H
data-tr-button	54_H
⊏▽ -button	55_H
S1-button	56_H
(service-mode-button	58_H)

Status Signals (Changes are detected):

on-hook	60_H
off-hook	61_H
ptt-idle	62_H
ptt-active	63_H
ignition-switch-off	64_H
ignition-switch-on	65_H
country-DK	68_H
country-S	69_H
country-N	$6A_H$
country-SF	$6B_H$

Character Set, from Radio to Control Box:

Display, Add Digit from the Right:

0	30_H
1	31_H
2	32_H
3	33_H
4	34_H
5	35_H
6	36_H
7	37_H
8	38_H
9	39_H
A	$3A_H$
B	$3B_H$
C	$3C_H$
D	$3D_H$
*	$3E_H$
#	$3F_H$

Display, Add Special Characters:

space-char	40_H
dec-point-char	41_H
slash-char	42_H
tri-bar-char	43_H
S-char	44_H
E-char	45_H
C-char	46_H
M-char	47_H
i-char	48_H
n-char	49_H
t-char	$4A_H$
r-char	$4B_H$
underline-char	$4C_H$
dummy-char	$4D_H$

Display, Clear Commands:

clear-last-digit	$4E_H$
clear-display	$4F_H$

Lamps and Control Signal:

clear-service-lamp	60_H
set-service-lamp	61_H
clear-call-lamp	62_H
set-call-lamp	63_H
clear-roaming-lamp	64_H
set-roaming-lamp	65_H
clear-hands-free-lamp	66_H
set-hands-free-lamp	67_H
clear-arrow-lamp	68_H
set-arrow-lamp	69_H
clear-P-lamp	$6A_H$
set-P-lamp	$6B_H$
clear-ext-alarm	$6C_H$
set-ext-alarm	$6D_H$
clear-ext-mute	$6E_H$
set-ext-mute	$6F_H$
clear-ring-signal	70_H
set-ring-signal	71_H
clear-malfunct-beep	72_H
set-malfunct-beep	73_H

CHAPTER
CHAPITRE
KAPITEL

5

Storno

Storno

GENERAL DESCRIPTION

SP9662D025AP

The STORNOPHONE 900U is a universal transportable radiotelephone for the NMT (Nordic Mobile Telephone) system. The transportable version is electrically identically to the mobile version except for the implementation of a charging unit and a switching and charging control module. The radio is powered by a built-in battery pack and has a connector for a remote control and external battery, e.g. a car installation.

The radio cabinet is made of sheet metal and covers the radio modules and the charging unit and battery pack. The control head and handset are mounted in the top. A hinged tid covers the top and the antenna is mounted on a connector on the left side.

The radio modules are mounted on a cast frame similar to the mobile version except for the antenna branching filter which has been placed on the side above the battery pack.

For description of the radiomodules, refer to VOLUME II (Module manual). For operating instruction and adjustment procedure refer to the other chapters in this handbook.



Storno

INSTALLATION

ACCESS TO BATTERIES

If the radio is not used for a period of more than 14 days it is recommended that the fuse in the bottom of the radio is removed. This will not affect the radio's memory contents of stored information, e.g. telephone numbers.

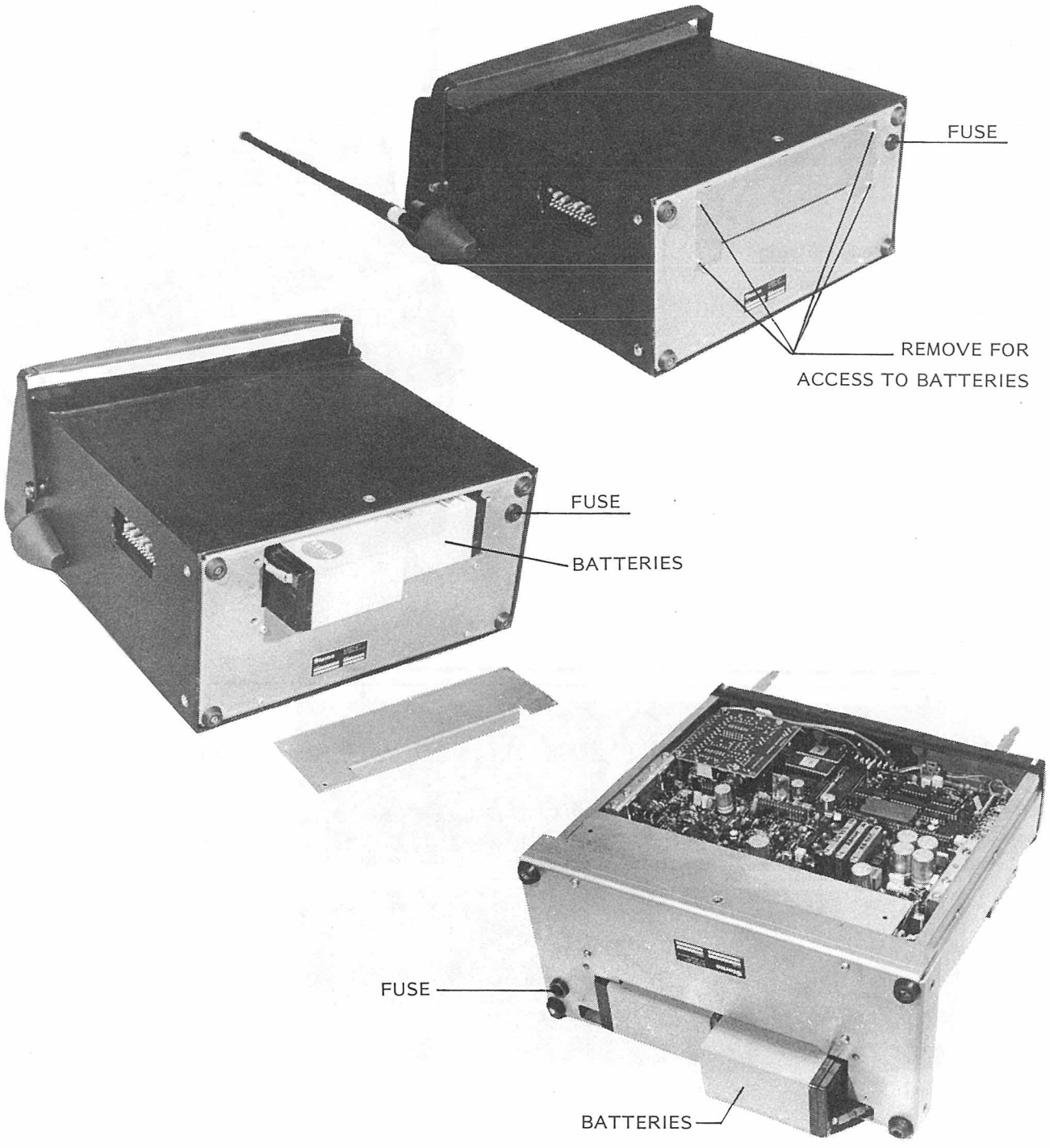

DISMANTLING

For access to the radio's personality prom and the adjustable components the radio has to be dismantled. The following instructions should be followed stricktly.

1. Remove the two screws in the lid and remove the lid.

2. Disconnect the handset cable from the socket in the handset retainer

3. Remove the screws holding the control panel, first at the front then at the rear.

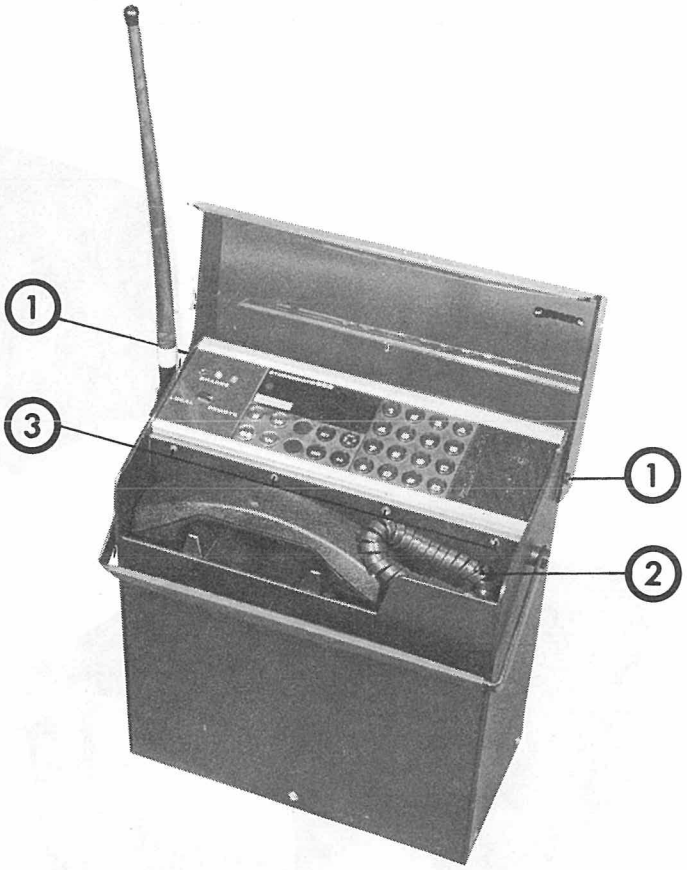



4. Lift the control panel for access to the connector below.
5. Remove the screw in the connector and unplug the cable loom.

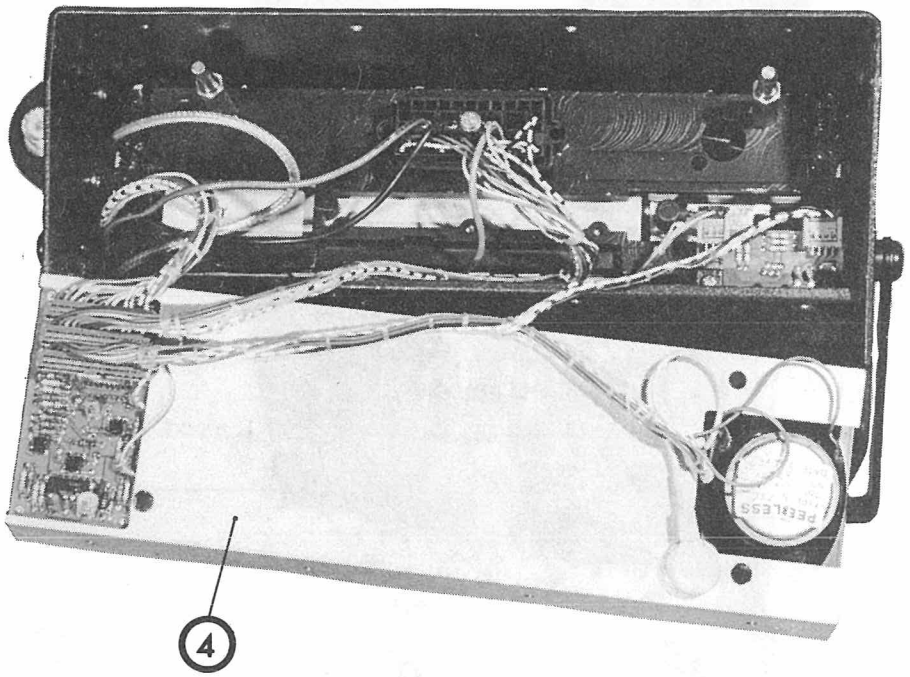

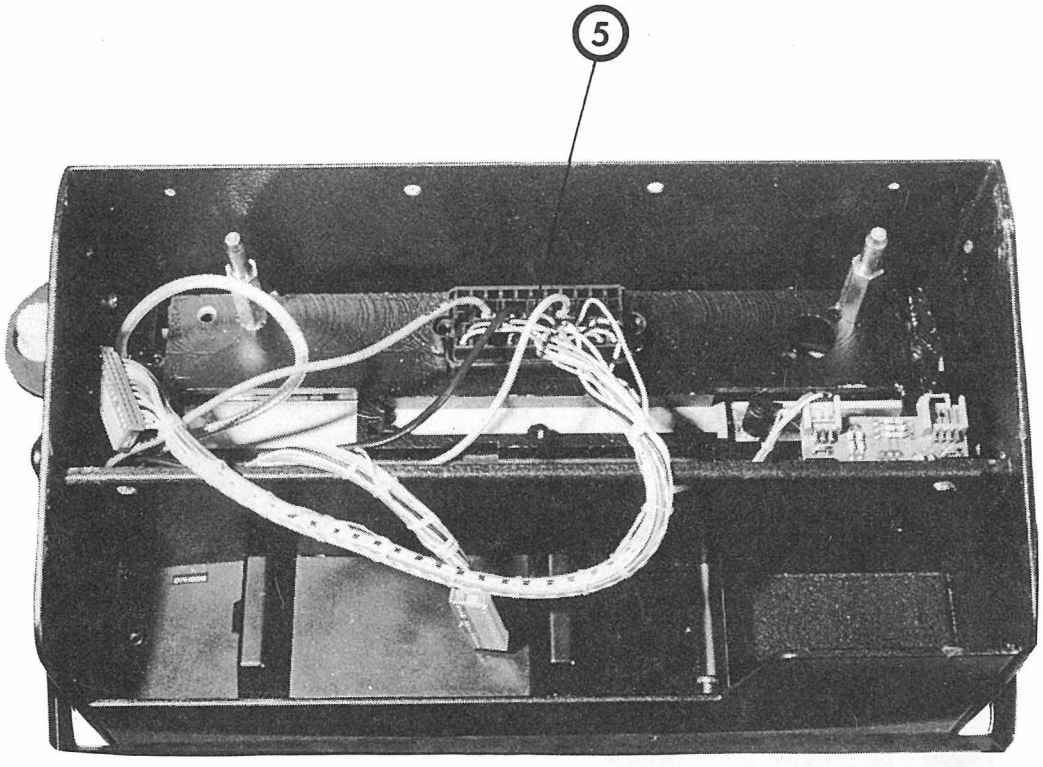

6. Remove the screws in the radio cabinet's lower edge and left up the cabinet in the handle.
   Release the antenna cable from the clip and the connector on BF964.
   Remove the cover completely.

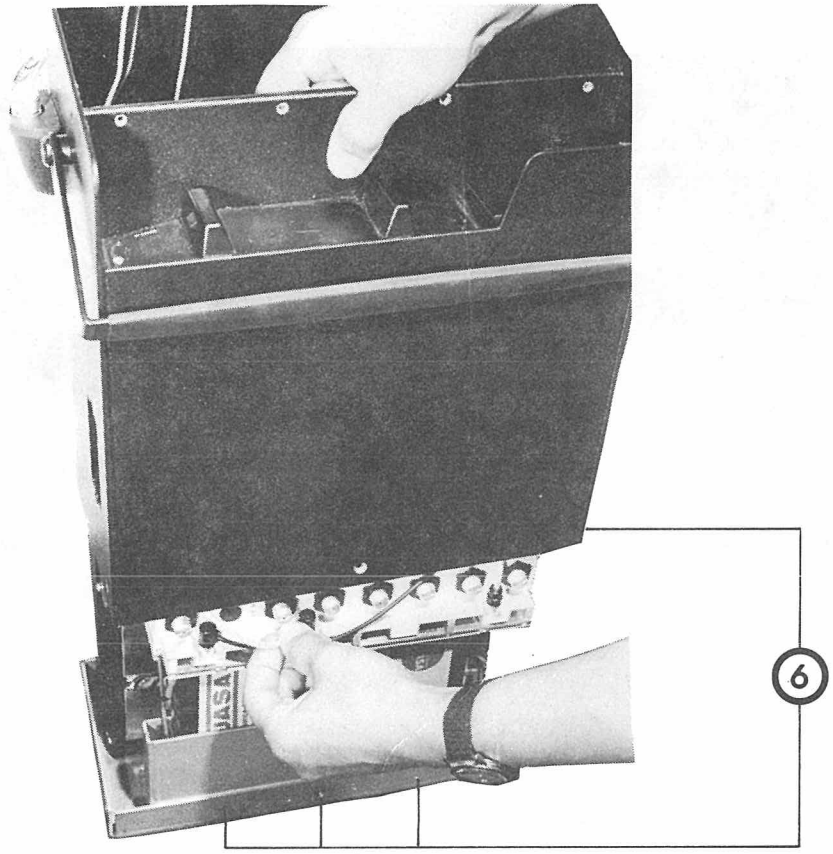

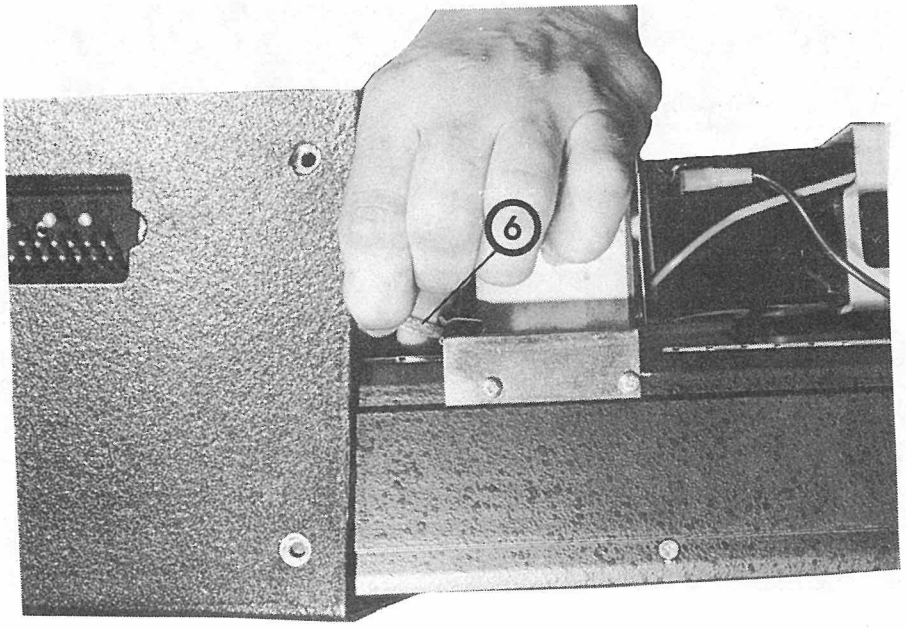

7. Remove the BF964 for access to the RF modules.

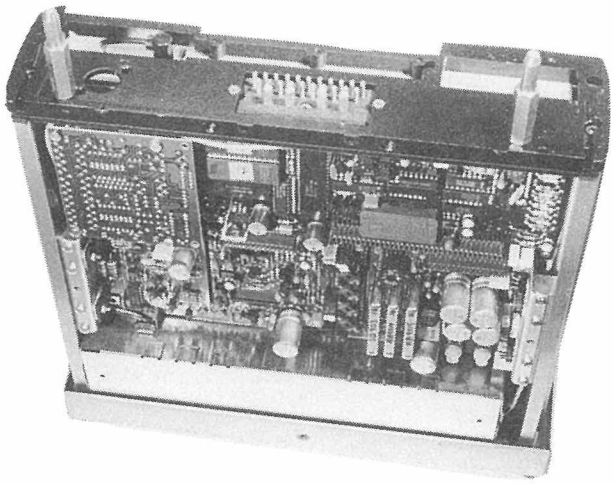

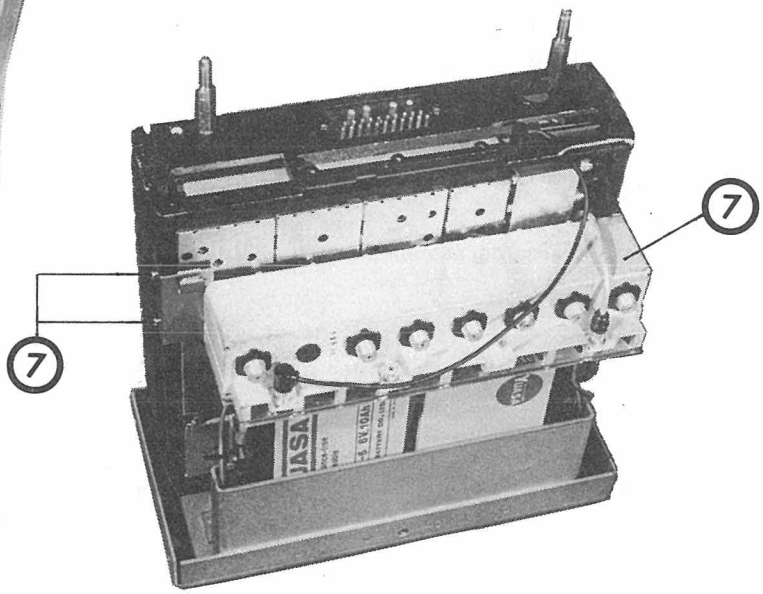

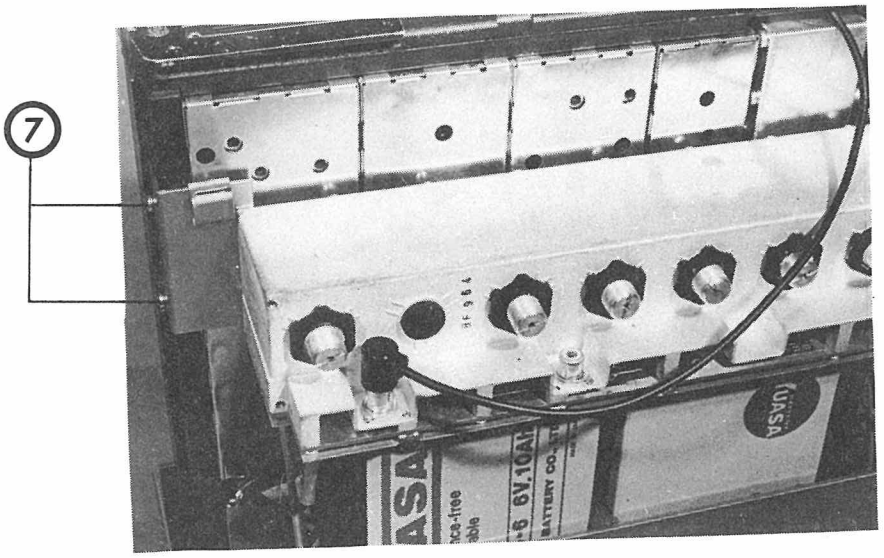

Assembly of the radio is done by using the instructions in reversed sequence.
Be careful not to strain the cable looms and damage the antenna cable.

MOBILE INSTALLATION

The radio can be used in two types of mobile installation:

A. Normal mobile installation with control head SC92, handset C9MT07 and junction box C9JB04. Optional a loudspeaker C9LS01 can be used.
The radio is connected to an mobile antenna and the control cable, and the REMOTE/LOCAL switch is set to REMOTE.

B. A mobile installation using a lighter plug and a magnet base antenna in which case the REMOTE/LOCAL switch is set to LOCAL and the built-in control head is used.

MOUNTING ITEMS

The following accessories are available for the STORNOMATIC 900U:

L855515G1
CC917 Cable with lighter plug, 12 V/3 A

L855516G1
CC918 Cable for car battery or external power supply, 12 V/10 A

J708110G1
MN907 Mounting bracket for installation

ACCESSORIES

ANTENNA AN961

AN961 is a rubber whip antenna.
It is screwed on the left side of the radio.



L85551G1
CK901 Carrying strap

The strap is delivered with clamps to fasten it on each side of the radio housing instead of the handle.

SC92

The control head is technically identisk with the mobile control head (see chapter 6).

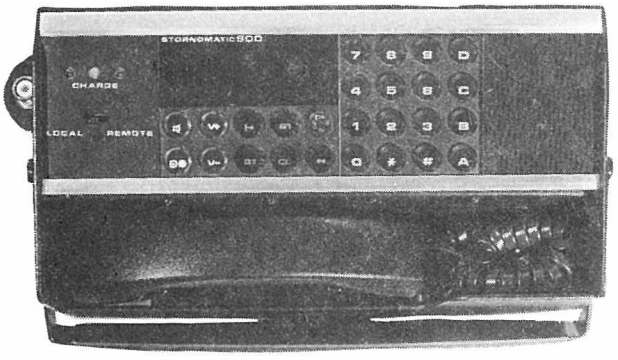

LOUDSPEAKER J707712P1

With holder J708078P1 and grill J708077P1 is a 3 ohms loudspeaker with 3 W audio output.

Storno

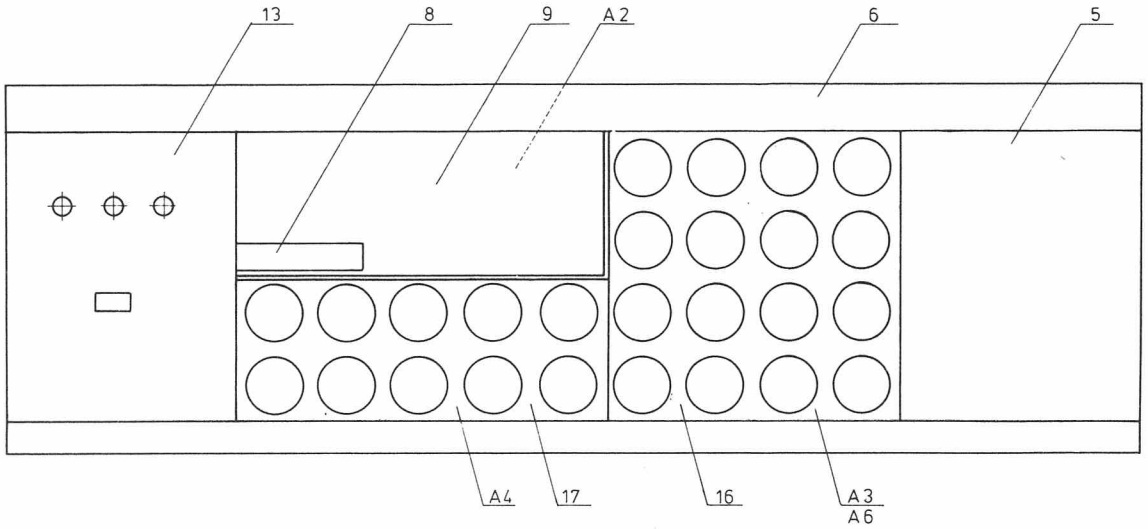

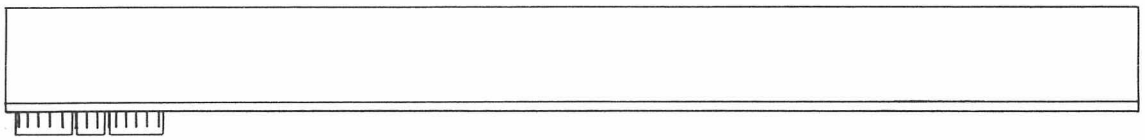

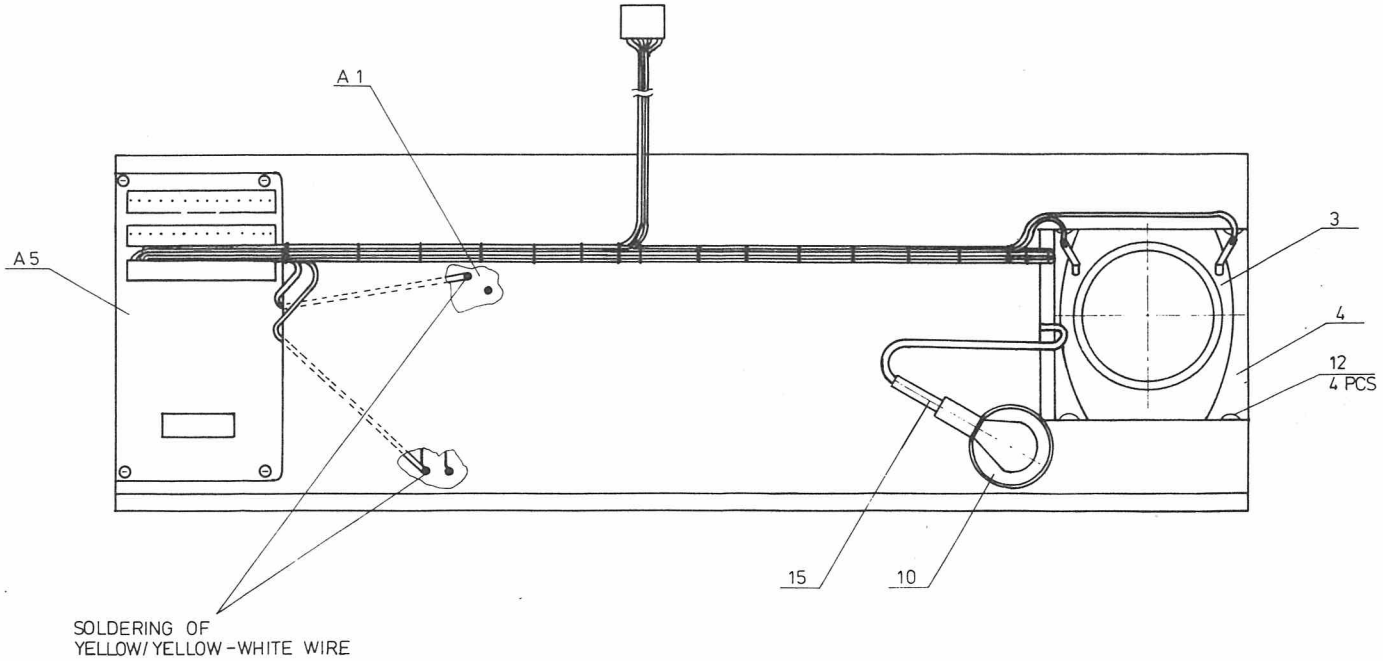

STORNOMATIC 900U
CONTROL HEAD ASSEMBLY

M405.120

Storno

C9MT04

HANDSET

The handset provides the radio with an electro-acoustic transducer via the control head.

The handset consists of a printed wiring board subassembly, earpiece, housing, and cable with connectors. The board and earpiece are fastened to one half of the housing by screws. The earpiece is electrically connected to the board by 2 wires and a molex connector. The housing encloses the board and earpiece, the 2 halves being fastened together by screws.

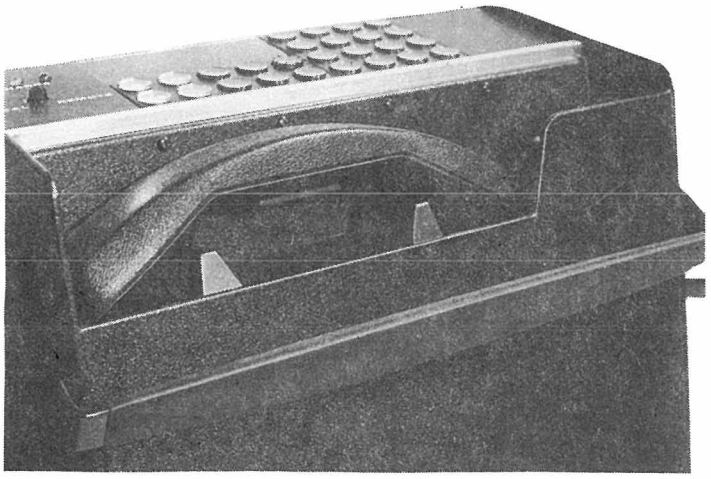

SPECIFICATIONS

MICROPHONE

Input voltage
9 V ±0.1 VDC

Temperature range
-30°C to +60°C

Source impedance
app. 100 ohm (with 560 ohm to VCC)

Distortion, 300-3000 Hz
≤5%

TELEPHONE

Output level at 1000 Hz
500 mV RMS input

Sound pressure level
102 dB ±2 dB

Temperature range
-30°C to +60°C

Input impedance (DC)
180 ohm

Input impedance at 1000 Hz
240 ohm

60.860-E1

Storno

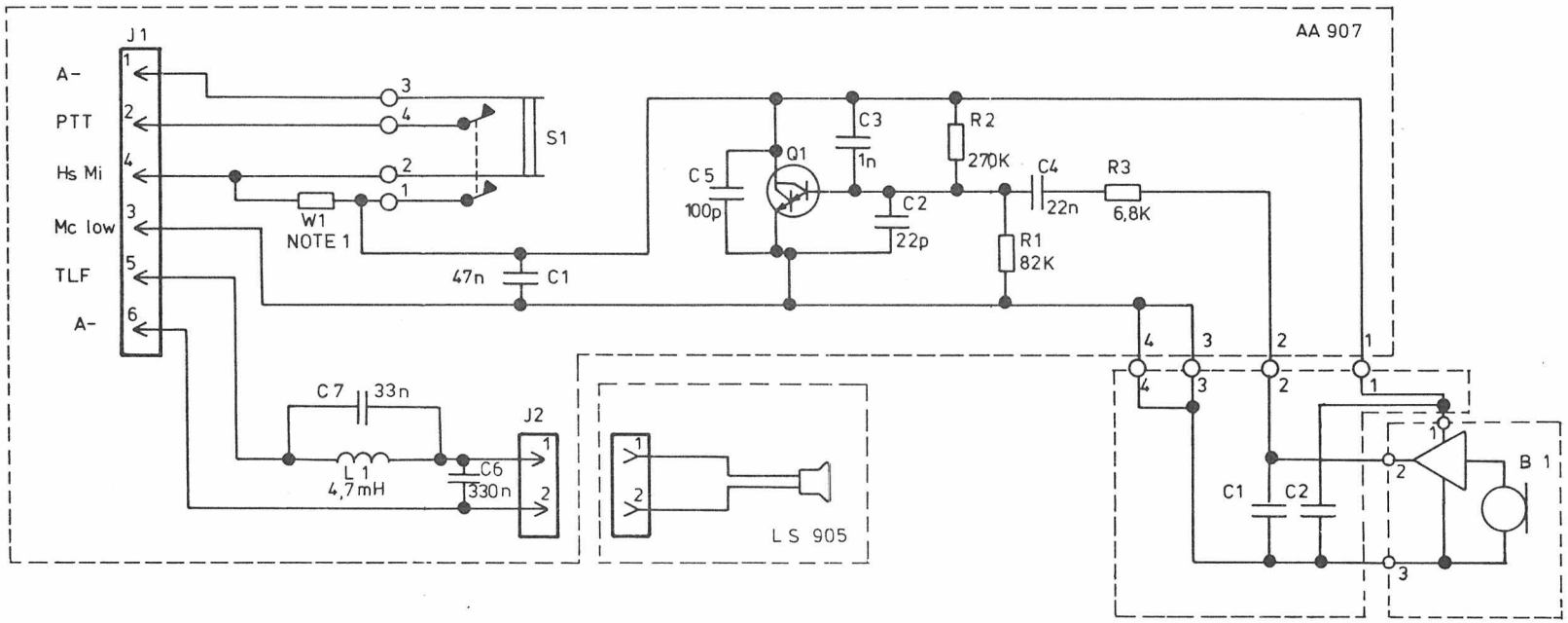

NOTE :

1: IF A SHORT-CIRCUIT OF HAND-SET SWITCH IS PREFERED, THE JUMPER W1 SHALL BE ASSEMBLED INTO AA 907 BD PW.

HANDSET C9MT04

K805300G1 D403.532

Storno

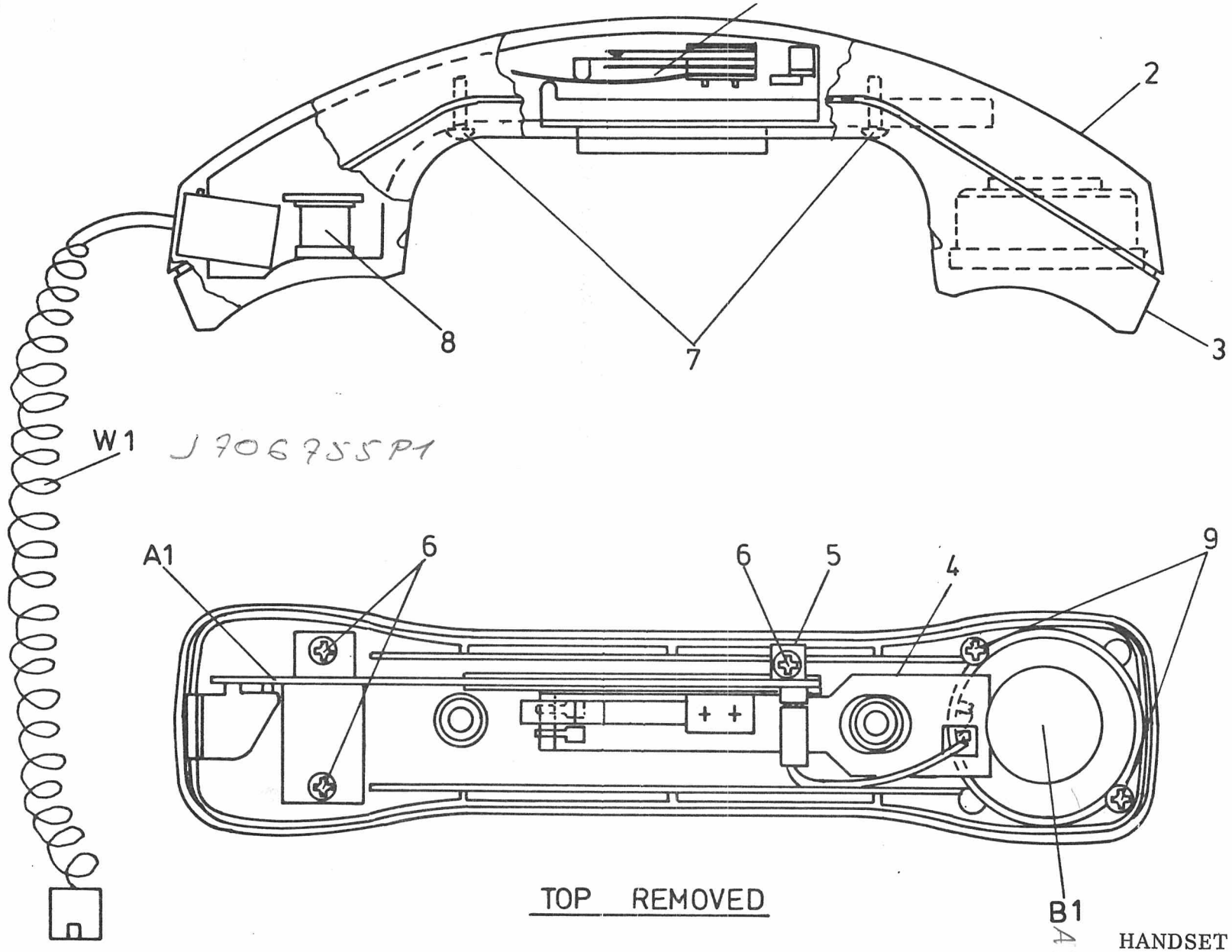

HANDSET ASSEMBLY
C9MT04 CODE K805300G1

M405. 124

Storno

Storno

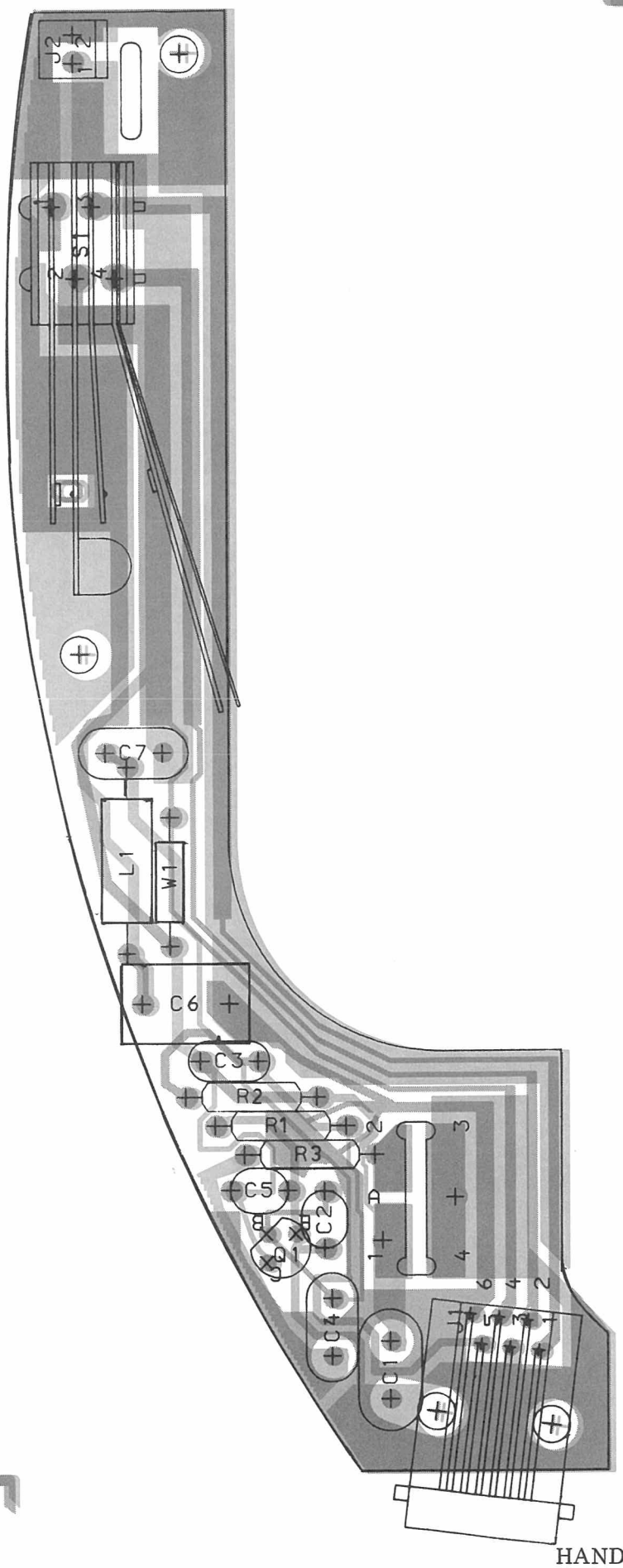

HANDSET AMPLIFIER AA907
COMPONENT LAYOUT
M905392G1

D403.533

Storno

Storno

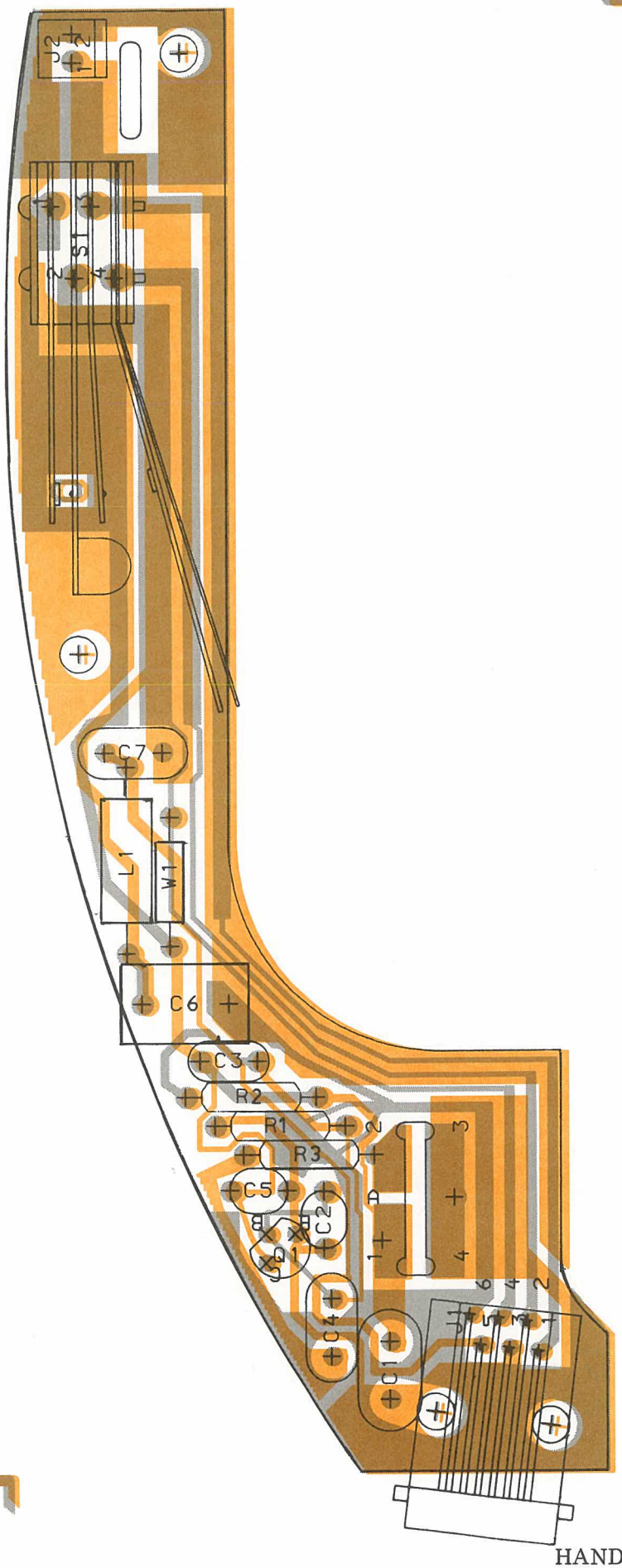

HANDSET AMPLIFIER AA907
COMPONENT LAYOUT
M905392G1

D403.533

ITEM NUMBER DESCRIPTION

K805300G1 C9MT04

M905392G1 SUB ASM.: AA907, F. NMT

P A R T S L I S T :

CIRCUIT POSITION	COMPONENT ITEM NUMBER	COMPONENT DESCRIPTION	QUANTITY TOTAL
A001	M905392G1	AA 907, F. NMT - N O T E ! - FOR PARTS SEE BELOW:	(1)
	A701703P1		
B001	J707246G1	LS 905	1
W001	J706755P1	CA ASM MICROPHONE	1
0002	D900169P1	HNDSET TOP	1
0003	D900170P1	HNDSET BOT	1
0004	B800609P1	PB	1
0005	A701476P1	SPT BD	1
0006	J706212P203	SCR PAN HD SZ 4.0 X 7.9 MM	3
0007	A701847P305	SCR THR FGRM	2
0008	A701485P1	WASH RUB	1
0009	J706212P202	SCR PAN HD SZ 4.0 X 6.4 MM	2
A001 :	M905392G1 :	AA 907 , F. NMT	
	L855296G1 :	SUB ASM.: CPNT BD PW :	
B001	J706041P1	MIKE EM60	1
A001 :	L855296G1 :	CPNT BD PW :	
C001	A700005P11	CAP POLY 47NF 10% , 50V	1
C002	A700235P17	CAP CER 22PF 5% , 50V	1
C003	A700234P1	CAP POLY 1NF 10% , 50V	1
C004	A700005P9	CAP PYES 22NF 10% , 50V	1
C005	A700233P1	CAP CER 100PF 10% , 50V	1
C006	A700004P5	CAP PYES 0,33MF 63V	1
C007	A700005P10	CAP PYES 33NF 10% , 63V	1
J001	J706197P1	JACK MODULAR , 6 CKT	1
J002	A700072P28	CONN MOLEX , 2 CKT	1
L001	J707174P1	COIL 4,7MH 10%	1
Q001	J706133P1	TSTR MPS-A13	1

CIRCUIT POSITION	COMPONENT ITEM NUMBER	COMPONENT DESCRIPTION	QUANTITY TOTAL
R001	A700019P60	RES DEPOS 82K OHM 0,25W	1
R002	A700019P66	RES DEPOS 270K OHM 0,25W	1
R003	A700019P47	RES DEPOS 6.8K 0.25W	1
S001	K805302G1	SW ADJ	1
0007	J706424P3	WASHER	1

Storno

CU901

CHARGING UNIT

The CU901 unit is designed for charging the internally mounted lead-acid 12 V 9.5 Ah battery. With an external 12 V 3 A power source connected to the "medium power" input terminal the battery is charged by the CU901 unit and the radio is powered from the battery.

With an external 12 V, 10 A power source connected to the "high power" terminal the battery is charged by the CU901 unit, and the radio is then powered directly from the external source. The unit is reverse polarity protected by means of diodes.

FUNCTIONAL DESCRIPTION

The charging characteristic as a function or time is shown in Fig. 1.

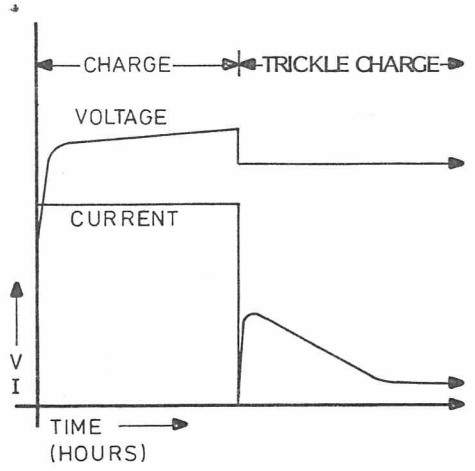

FIGURE 1 D403.542

Radio is in "off" condition

Charging ceases after the constant current period i.e. the charging unit switches itself off.

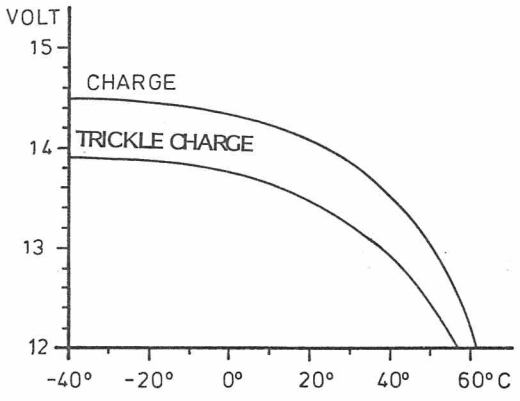

FIGURE 2 D403.542

Radio in the "on" condition

This begins in a constant current state until the battery terminal voltage reaches the cut-off point (ca. 90% full charge). At this point the charging state changes to constant voltage which provides trickle charging.

Fig. 2 shows the values for end of charge and trickle charge voltages as a function of temperature.

Charging unit CU901 is used in conjunction with unit AC901 which provides charge condition information. This information is provided by means of three LED's.

The red diode (Flashing) indicates discharged state i.e. charging is necessary.

The yellow diode (constant) indicates constant current charging.

The green diode indicates fully charged condition trickle charging in progress.
The time for charging a fully discharged battery depends on whether or not the radio is on or off ("medium power" input terminal).

- With the radio switched ON, the charging time is approx. 14 hours.
- With the radio switched OFF the charging time is approx. 8 hours.

When the unit is powered via the "high power" terminal the charging time for a fully discharged battery is always approx. 8 hours.
If the battery is only partially discharged the charging time is shorter.

CIRCUIT DESCRIPTION

CU901
BLOCK DIAGRAM
M905711G1

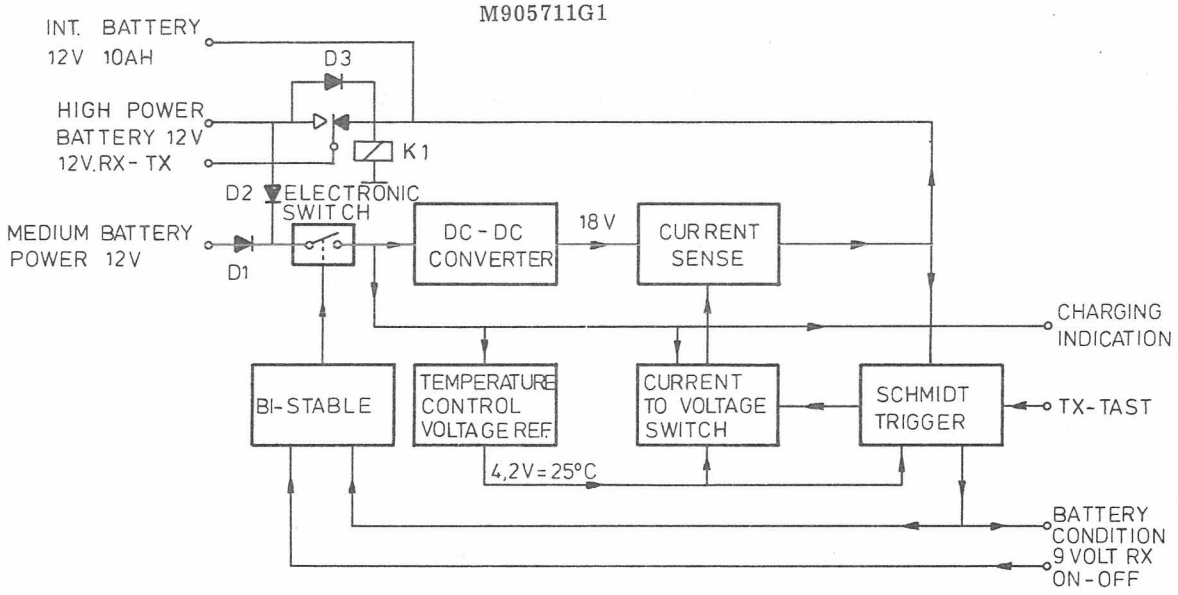

FIGURE 3 D403.539

Polarity protection

Diodes D1, D2, D3 provide reverse polarity protection.

Relay K1

K1 is a relay which senses the power input terminal used, "high" or "medium".
The relay either provides a direct connection to the external (high) power source or powers the radio from the internal battery with charging from an external "medium" power source.

DC-DC converter

Charging a 12 V battery directly from a 12 V source is impossible.
The 12 V source is therefore increased by 6 V by means of a DC-DC converter.
The converter consists of T1, Q1, Q2, D4, D5.

Electronic switch

Charging takes place with the radio switched ON or OFF. In OFF condition, when the battery becomes fully charged, Q3 switches OFF the DC-DC converter, isolating the CU901 unit from the external power source.

Bi-Stable

Q4 - Q5 form a Bi-stable multivibrator which is controlled by the Schmitt Trigger on +9 V RX. The Bi-stable circuit is used to provide a control signal for the electronic switch which determines whether or not trickle charging should take place.

Schmitt Trigger

Q12 - Q13 form a Trigger circuit which monitors the "battery under charge" voltage. When the Trigger point is reached the charger changes from the constant current to the constant voltage state.
If the transmitter is keyed the charger automatically provides a new constant current charging period. If the radio is switched OFF trickle charging does not take place.

Constant-current to voltage switch

Q9 - 10 switch Q8 from a constant current to a constant voltage condition when Q12 of the Schmidt Trigger is ON.
(See Fig. 1).

Current sense

When Q9 is OFF R10, Q7 and Q8 function as a constant current source.
When Q12 is ON Q8, Q9 and Q10 function as a constant voltage source.

Temperature controlled voltage reference

Network R11-12-13-D8 provides a temperature dependant voltage reference for the end of charge Trigger points. Q6 is a temperature compensating buffer.

TECHNICAL SPECIFICATIONS

Input voltage

Nominal: 12 VDC
Minimum: 10.8 V
Maximum: 15.6 V

Input current:

Without load:	180 - 240 mA
With load:	2.5 - 3.5 Amp

Output current:

1.3 - 1.8 Amp.

Temperature range

$-25^{o}C$ to $+55^{o}C$

Storno

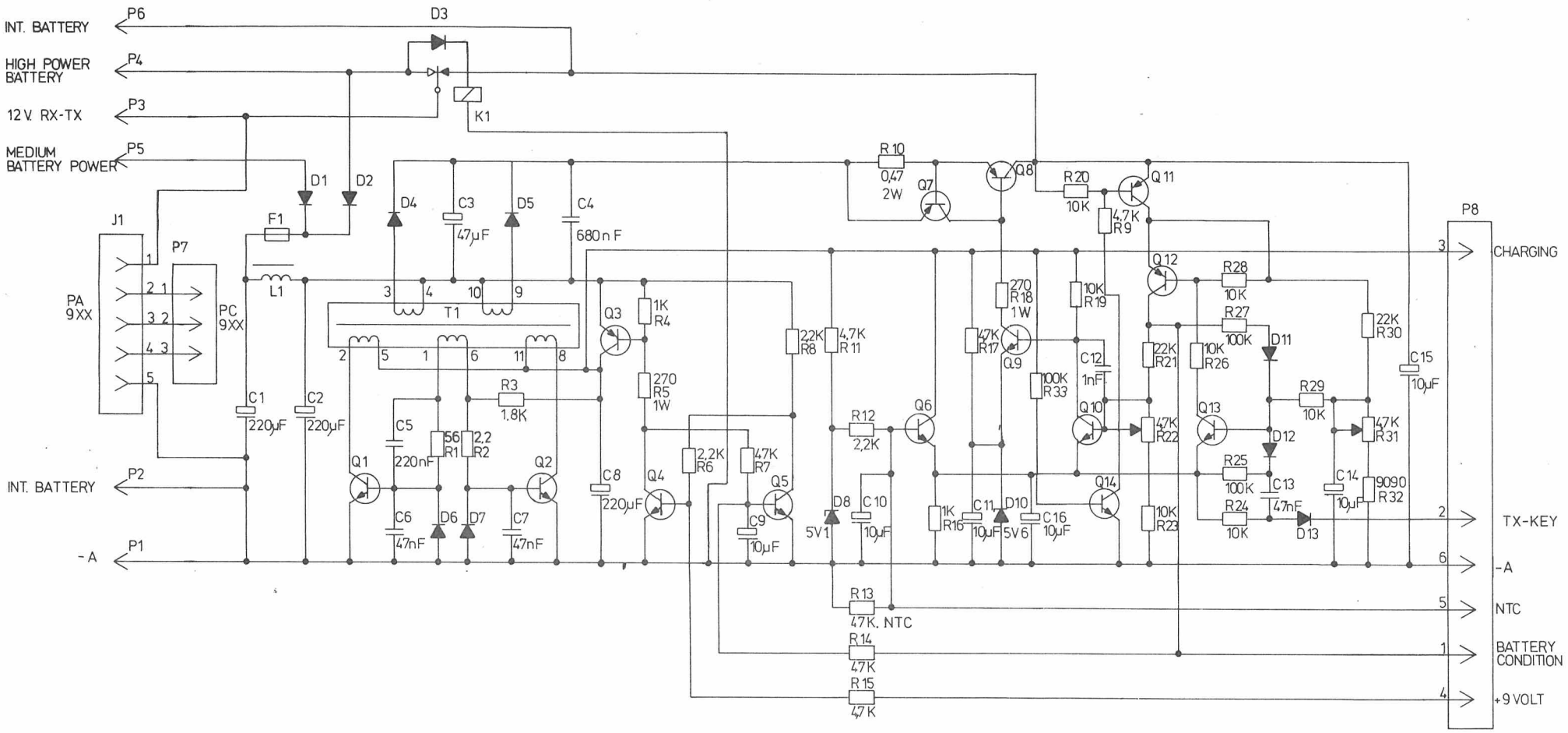

Note:

All resistors are 1/4 watt unless otherwise specified.
Resistor values in Ω unless followed by multiplier k or M.
Capacitor values in F unless followed by multiplier µ, n or p.
Inductance values in H unless followed by multiplier m or µ.

CHARGING UNIT CU901
M905711G1

D403.540

Storno

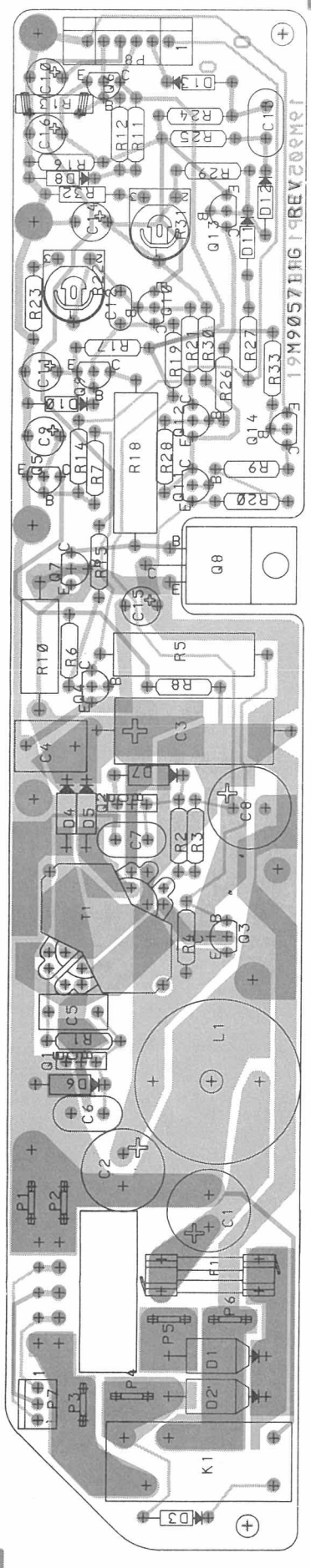

CHARGING UNIT CU901
COMPONENT LAYOUT
M905711G1

D403.541

Storno

Storno

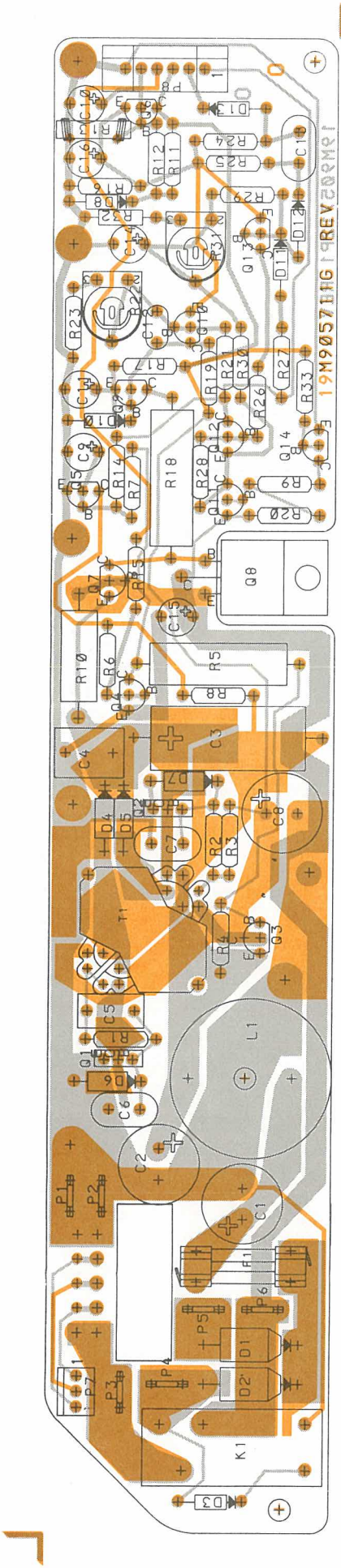

CHARGING UNIT CU901
COMPONENT LAYOUT
M905711G1

D403.541

ITEM NUMBER DESCRIPTION

M905711G1 CPNT BD PW CU 901

P A R T S L I S T :

CIRCUIT POSITION	COMPONENT ITEM NUMBER	COMPONENT DESCRIPTION	QUANTITY TOTAL
C001	J706005P5	CAP ELECT 220MF 16V	1
C002	J706005P5	CAP ELECT 220MF 16V	1
C003	J706354P1	CAP ELECT 47MF 16V	1
C004	A700004P7	CAP PYES 680 NF 63V	1
C005	A700004P4	CAP POLY 0.22MF 63V	1
C006	A700234P11	CAP POLY 0,047MF 50V	1
C007	A700234P11	CAP POLY 0,047MF 50V	1
C008	J706005P5	CAP ELECT 220MF 16V	1
C009	A701534P7	CAP TA 10MF 16V	1
C010	A701534P7	CAP TA 10MF 16V	1
C011	A701534P7	CAP TA 10MF 16V	1
C012	A700234P1	CAP POLY 1000PF 50V	1
C013	A700234P11	CAP POLY 0,047MF 50V	1
C014	A701534P7	CAP TA 10MF 16V	1
C015	J706005P1	CAP ELECTRO 10MF 63V	1
C016	A701534P7	CAP TA 10MF 16V	1
D001	J706026P1	DIO SI 1N5401	1
D002	J706026P1	DIO SI 1N5401	1
D003	A700028P1	DIO 1N4148	1
D004	J706282P1	DIODE SI POW 1N4933	1
D005	J706282P1	DIODE SI POW 1N4933	1
D006	J706282P1	DIODE SI POW 1N4933	1
D007	J706282P1	DIODE SI POW 1N4933	
D008	A700025P6	DIO ZENER 5,1V 5% , 0.4W	1
D010	A700025P7	DIO ZENER 5,6V 5% , 0.4W	1
D011	A700028P1	DIO 1N4148	1
D012	A700028P1	DIO 1N4148	1
D013	A700028P1	DIO 1N4148	1
F001	J706998P9	FUSE 4 A	1
K001	J706741P1	RELAY	1
L001	J708131G1	COIL ASM	1
			1
P001	J708100P1	TERM TAB SPADE	1
P002	J708100P1	TERM TAB SPADE	1
P003	J708100P1	TERM TAB SPADE	1
P004	J708100P1	TERM TAB SPADE	1
P005	J708100P1	TERM TAB SPADE	1
P006	J708100P1	TERM TAB SPADE	1
P007	J708068P3	CONN 3 PIN	1
P008	J708068P6	CONN PIN SNAP LOCK	1
Q001	J707594P1	TRST NPN BD 437	1
Q002	J707594P1	TRST NPN BD 437	1
Q003	J707435P1	TSTR PNP BC 369	1
Q004	A700017P2	TSTR NPN BC 548C	1

CIRCUIT POSITION	COMPONENT ITEM NUMBER	COMPONENT DESCRIPTION	QUANTITY TOTAL
Q005	A700017P2	TSTR NPN BC 548C	1
Q006	A700017P2	TSTR NPN BC 548C	1
Q007	A700020P1	TSTR PNP BC 558A/B	1
Q008	J708070P1	TSTR PNP POW. D45H8	1
Q009	A700017P2	TSTR NPN BC 548C	1
Q010	A700017P2	TSTR NPN BC 548C	1
Q011	A700020P1	TSTR PNP BC 558A/B	1
Q012	A700020P1	TSTR PNP BC 558A/B	1
Q013	A700017P2	TSTR NPN BC 548C	1
Q014	A700017P2	TSTR NPN BC 548C	1
R001	A700019P22	RES DEPOS 56 OHM 0,25W	1
R002	A700019P5	RES DEPOS 2,2K 0,25W	1
R003	A700019P40	RES DEPOS 1,8K 0,25W	1
R004	A700019P37	RES DEPOS 1K 0,25W	1
R005	J706251P30	RES DEPOS 270 OHM 1W	1
R006	A700019P41	RES DEPOS 2,2K 0,25W	1
R007	A700019P57	RES DEPOS 47K 0.25W	1
R008	A700019P41	RES DEPOS 2,2K 0,25W	1
R009	A700019P45	RES DEPOS 4.7K 0.25W	1
R010	A700050P9	RES WW 0,47 OHM 2W	1
R011	A700019P45	RES DEPOS 4.7K 0.25W	1
R012	A700019P41	RES DEPOS 2,2K 0,25W	1
R013	J707282P2	RES NTC 47K OHM 0,6W	1
R014	A700019P57	RES DEPOS 47K 0.25W	1
R015	A700019P45	RES DEPOS 4.7K 0.25W	1
R016	A700019P37	RES DEPOS 1K 0,25W	1
R017	A700019P45	RES DEPOS 4.7K 0.25W	1
R018	J706251P30	RES DEPOS 270 OHM 1W	1
R019	A700019P49	RES DEPOS 10K 0.25W	1
R020	A700019P49	RES DEPOS 10K 0.25W	1
R021	A700019P53	RES DEPOS 22K 0,25W	1
R022	J706008P8	RES VAR 4,7K OHM 0,1W	1
R023	A700019P49	RES DEPOS 10K 0.25W	1
R024	A700019P49	RES DEPOS 10K 0.25W	1
R025	A700019P61	RES DEPOS 100K 0.25W	1
R026	A700019P49	RES DEPOS 10K 0.25W	1
R027	A700019P61	RES DEPOS 100K 0.25W	1
R028	A700019P49	RES DEPOS 10K 0.25W	1
R029	A700019P49	RES DEPOS 10K 0.25W	1
R030	A700019P53	RES DEPOS 22K 0,25W	1
R031	J706008P8	RES VAR 4,7K OHM 0,1W	1
R032	A701250P293	RES MET 9090 OHM 0,25 W	1
R033	A700019P61	RES DEPOS 100K 0.25W	1
T001	K805481G1	XFRM ASM	1
0004	J708025P1	FZ HOLDER	1

Storno

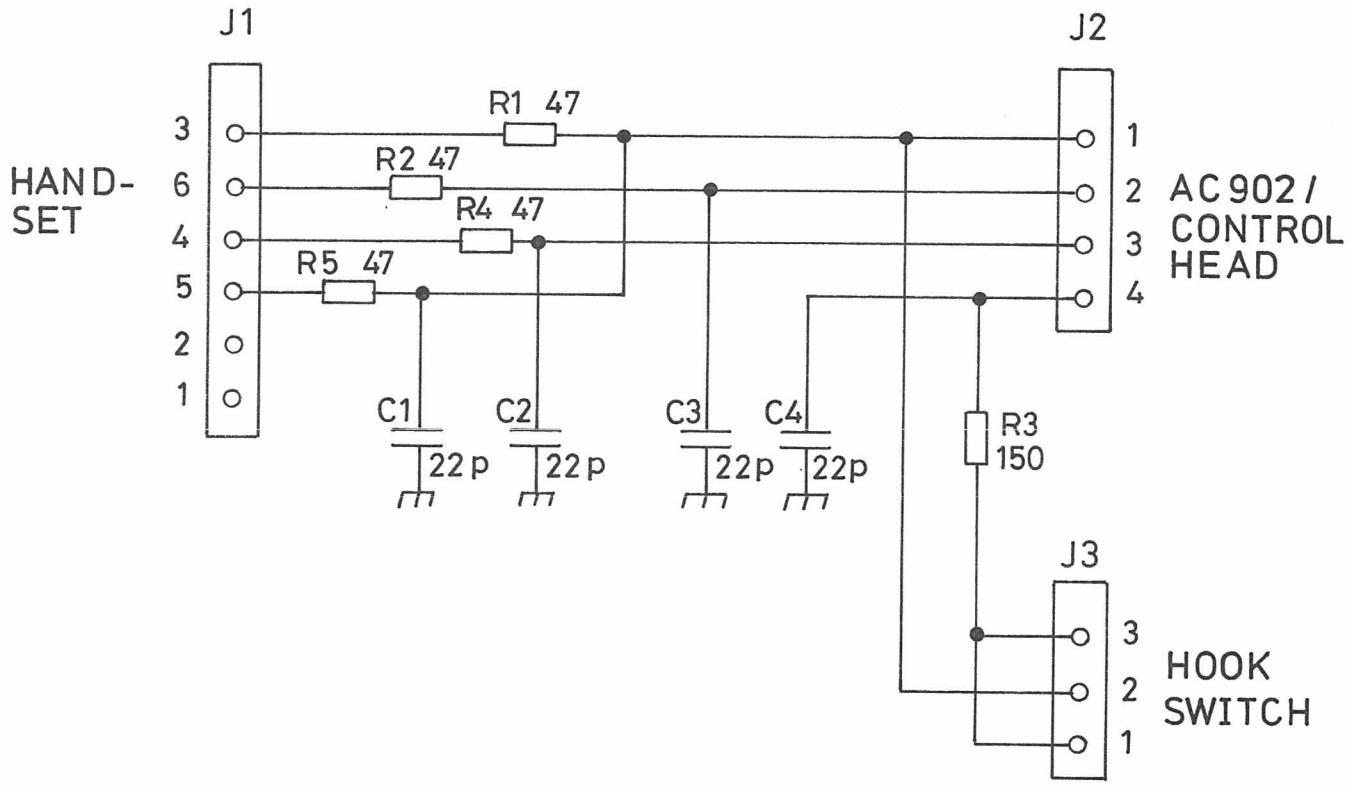

JUNCTION PANEL JP908
L855503G1

D403.535/2

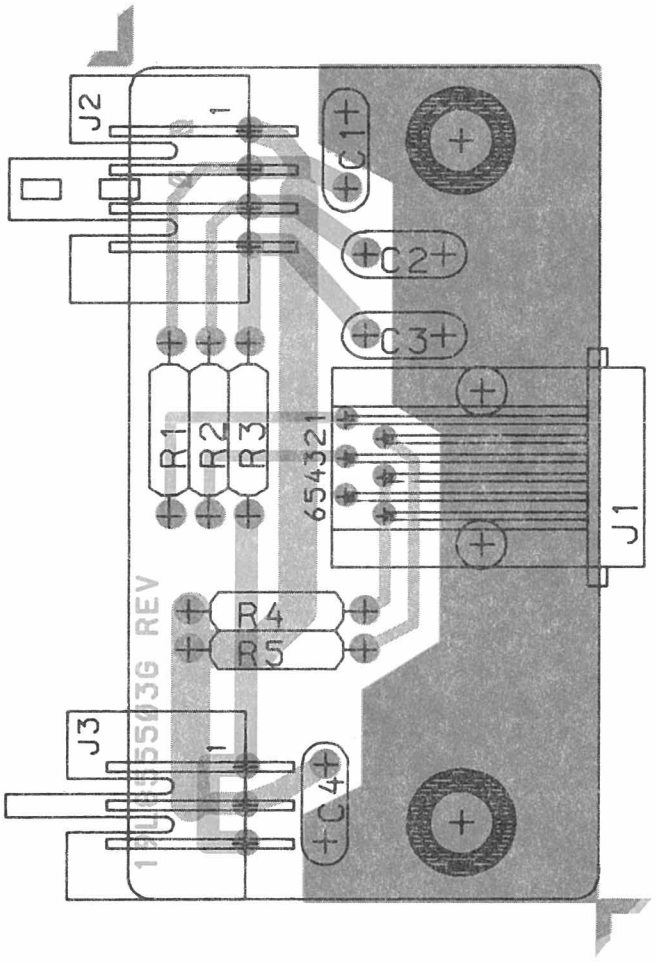

JUNCTION PANEL JP908
COMPONENT LAYOUT
L855503G1 D403.536

Storno

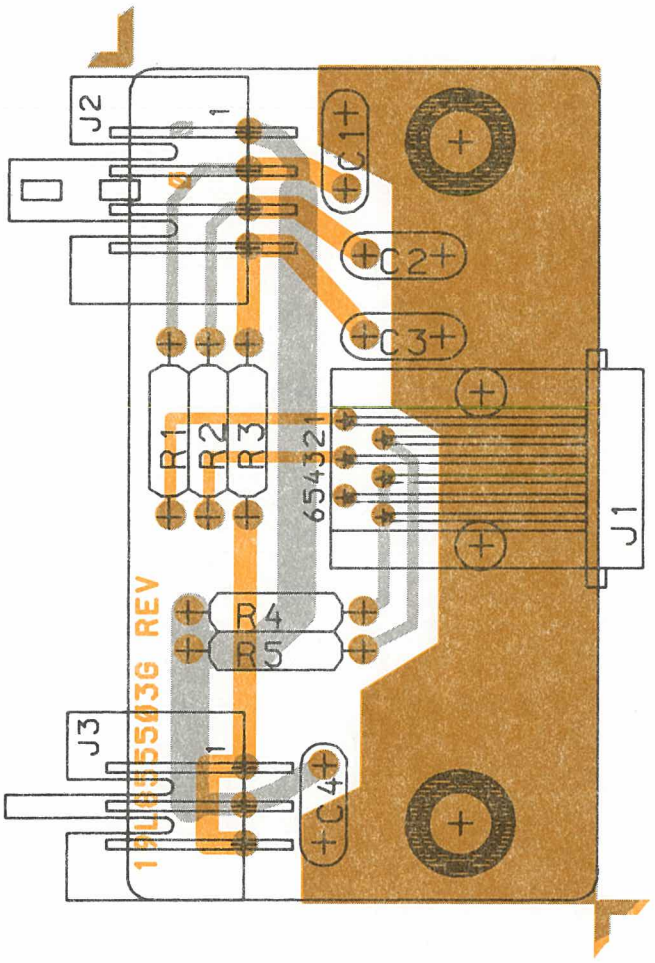

JUNCTION PANEL JP908
COMPONENT LAYOUT
L855503G1

D403.536

ITEM NUMBER L855503G1 DESCRIPTION JP 908

P A R T S L I S T :

CIRCUIT POSITION	COMPONENT ITEM NUMBER	COMPONENT DESCRIPTION	QUANTITY TOTAL
C001	A700235P17	CAP CER 22PF 50V	1
C002	A700235P17	CAP CER 22PF 50V	1
C003	A700235P17	CAP CER 22PF 50V	1
C004	A700235P17	CAP CER 22PF 50V	1
J001	J706197P1	JACK MODULAR	1
J002	J708068P104	CONN	1
J003	J708068P103	CONN	1
R001	A700019P21	RES DEPOS 47 OHM 0,25W	1
R002	A700019P21	RES DEPOS 47 OHM 0,25W	1
R003	A700019P27	RES DEPOS 150 OHM 0,25W	1
R004	A700019P21	RES DEPOS 47 OHM 0,25W	1
R005	A700019P21	RES DEPOS 47 OHM 0,25W	1
0008	A700137P2	SPACER	2

Storno

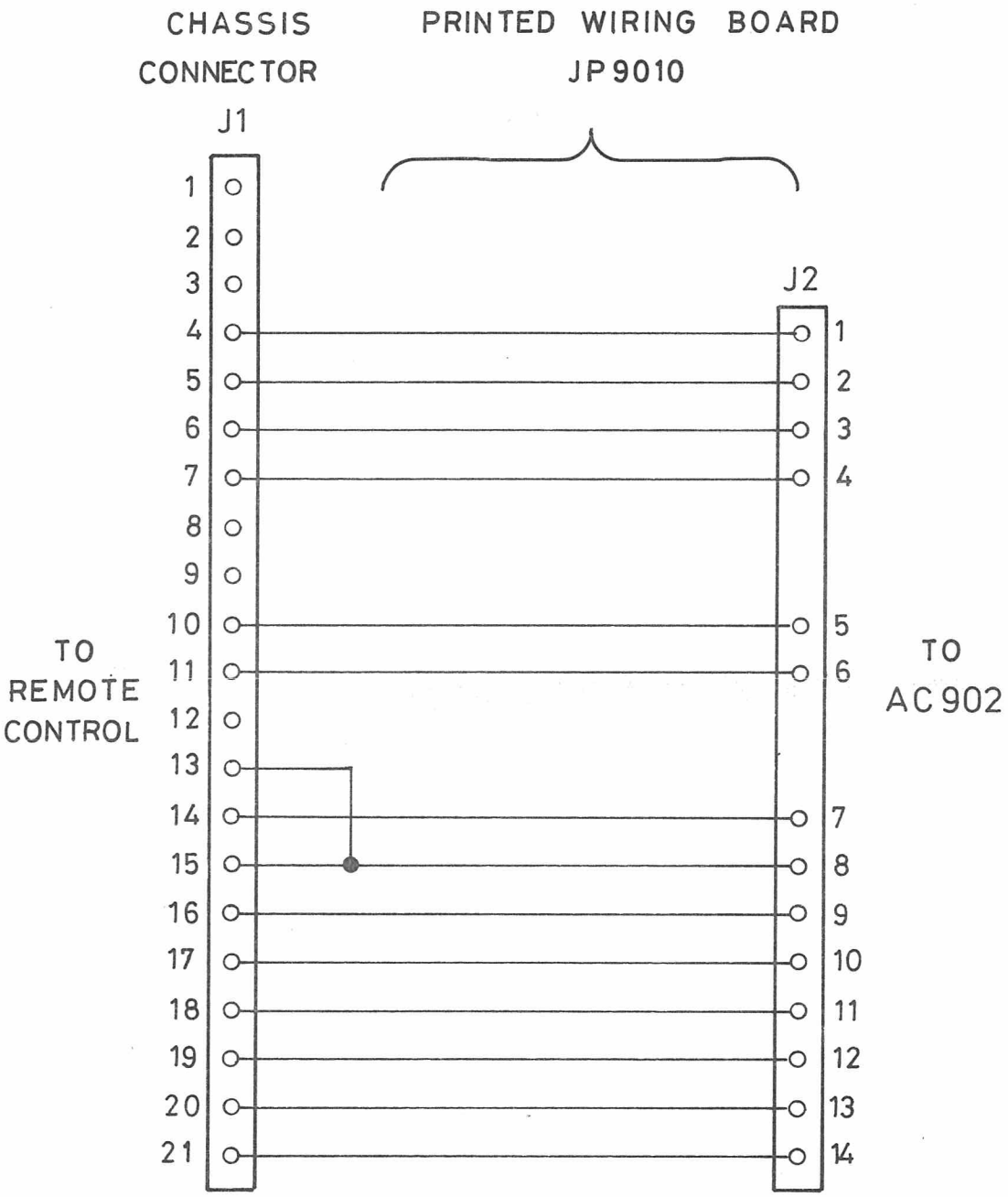

JUNCTION PANEL JP9010

L855500G2 D403.715/2

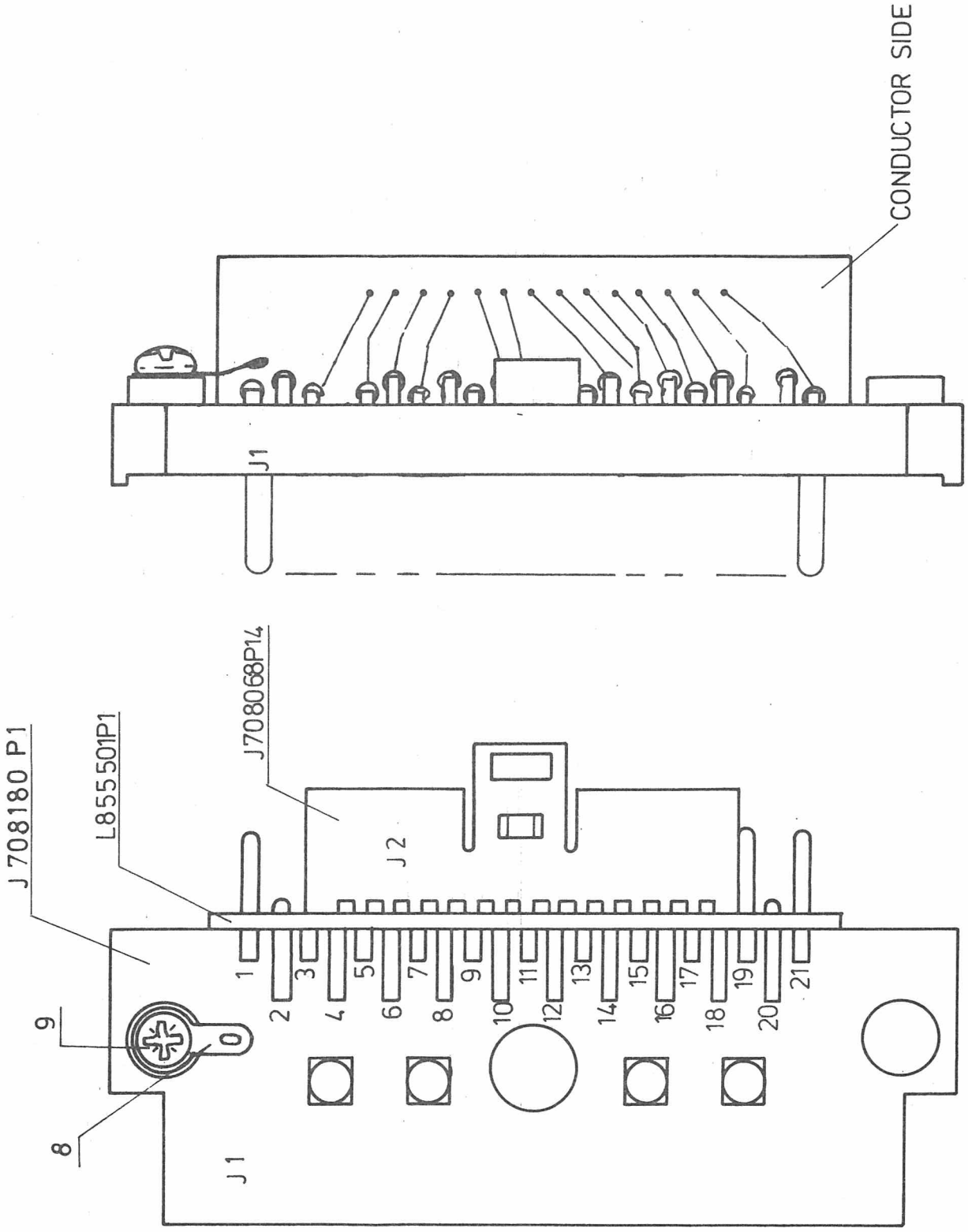

JUNCTION PANEL ASSEMBLY
JP9010 CODE L855500G2

M405. 128

ITEM NUMBER	DESCRIPTION
L855500G2	JP 9010

P A R T S L I S T :

CIRCUIT POSITION	COMPONENT ITEM NUMBER	COMPONENT DESCRIPTION	QUANTITY TOTAL
J001	J708180G1	CONN 21 PIN	1
J002	J708068P14	CONN 14 PIN	1
0002	C850591G1	CONNECTOR	1
0009	A700031P405	SCREW PAN HD M3.0 X 5.0 MM	1
0010	K805467G2	CABLE ASM	1
0011	B800557P1	CONTACT	1
0012	A701289P1	RING RETAINING	4

Storno

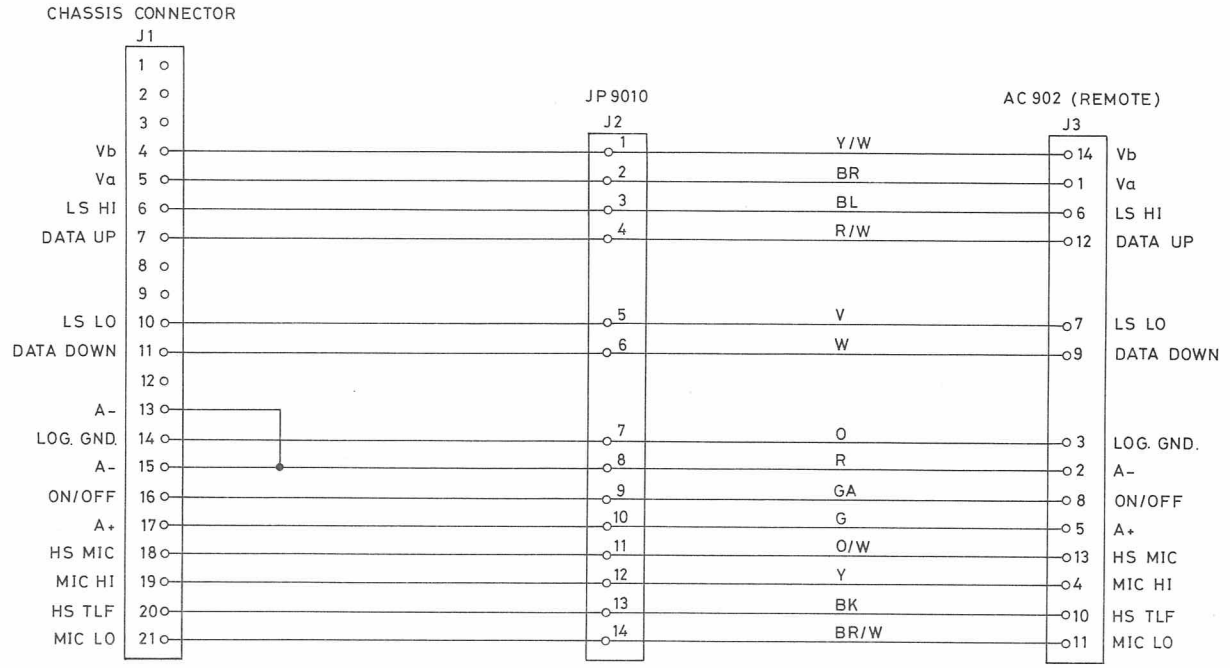

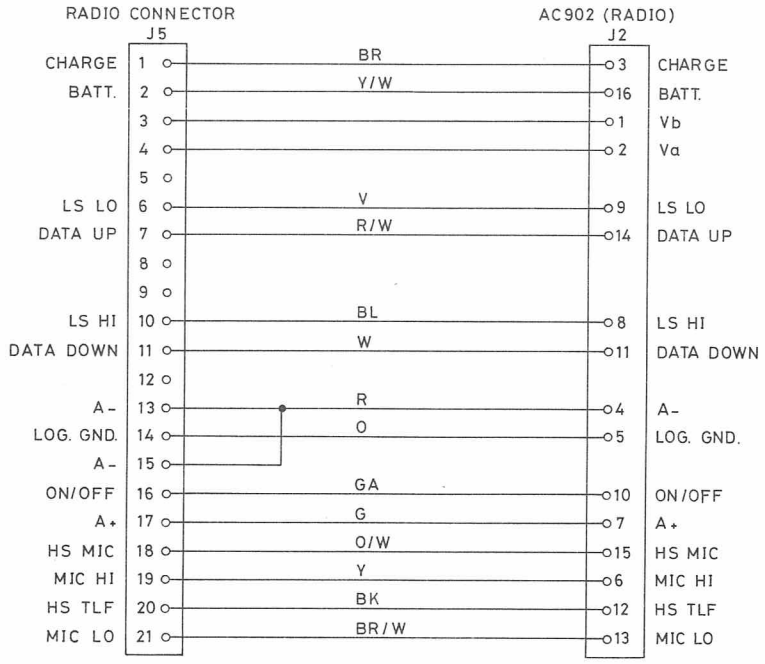

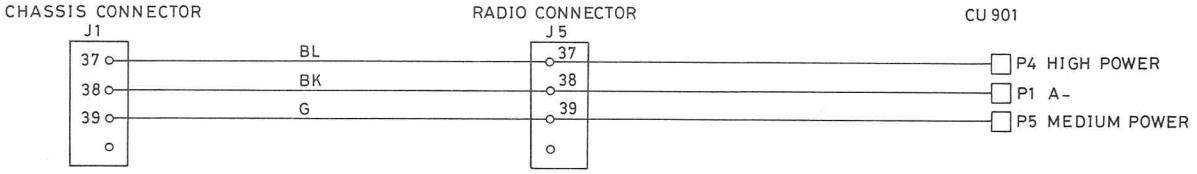

CABLE INTERCONNECTIONS
IN SP9662 D025AP

D403.741/2

CHAPTER
CHAPITRE
KAPITEL

6

Storno

Storno

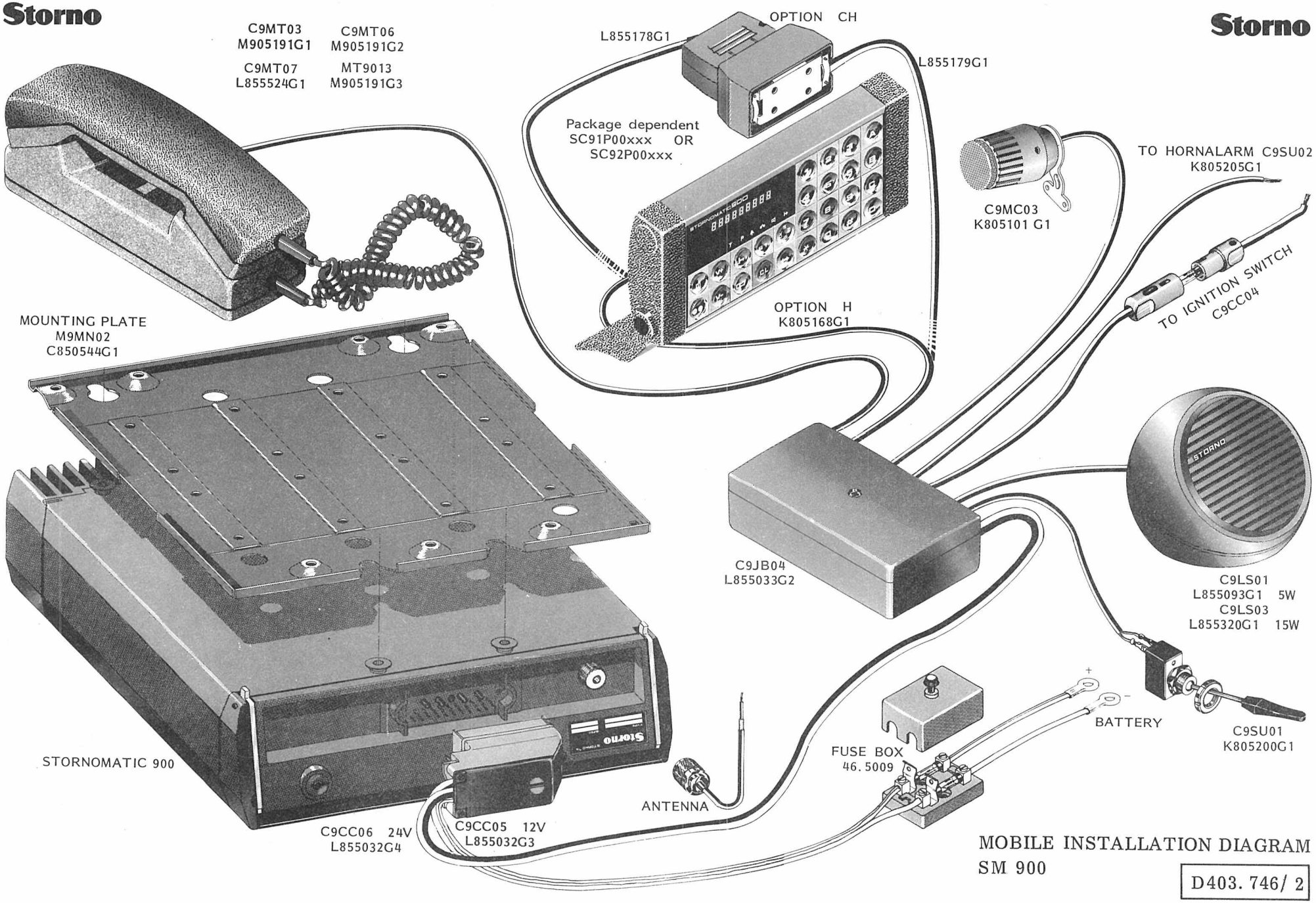

Storno

MOBILE INSTALLATION DIAGRAM
SM 900

D403. 746/ 2

Storno

CONTROL HEAD







Three control heads are available for controlling the MOBILE NMT radio: SC91 (L), SC92 (GL) and SC93 (GLB).

For applications where the control functions are limited the relative simple control head SC91 is used. It contains the necessary circuitry for interfacing the control buttons and the display, and for converting data from parallel to serial form and vice versa. SC91 is equipped with 4 indicator lamps, 10 digit push buttons, 6 functions push buttons and one country select switch.

For more complex applications SC92 (for mobile installation) or SC93 (as desk model) are used. They are technically identisk.
They are provided with an 8 digit alphanumerical display, 6 indicator lamps, 10 digit push buttons, 15 functions push buttons and one country select switch.

The display screen will, when no indicators are on, appear as a lusterless surface. When a function is active. The corresponding symbol is backlighted and is visible on the screen.

To make the key pad universal and usable for different control functions the mode selection principle is utilized. After a key has been pushed, the appropriate mode button must be pushed to tell the control logic which operation is to be executed.

All controls are pushbuttons without mechanical latches and are arranged as the standard telephone layout. Two versions are available, one for Denmark and Norway one for Sweden and Finland.

All buttons are automatically illuminated when the ambient light is below a certain level and a dimmer circuit automatically adjusts the brightness of the display accordingly.

The control heads are designed to fit the interior of a modern car or truck and can be mounted in several ways, for example on top of the dashboard, or under.

Storno

Storno

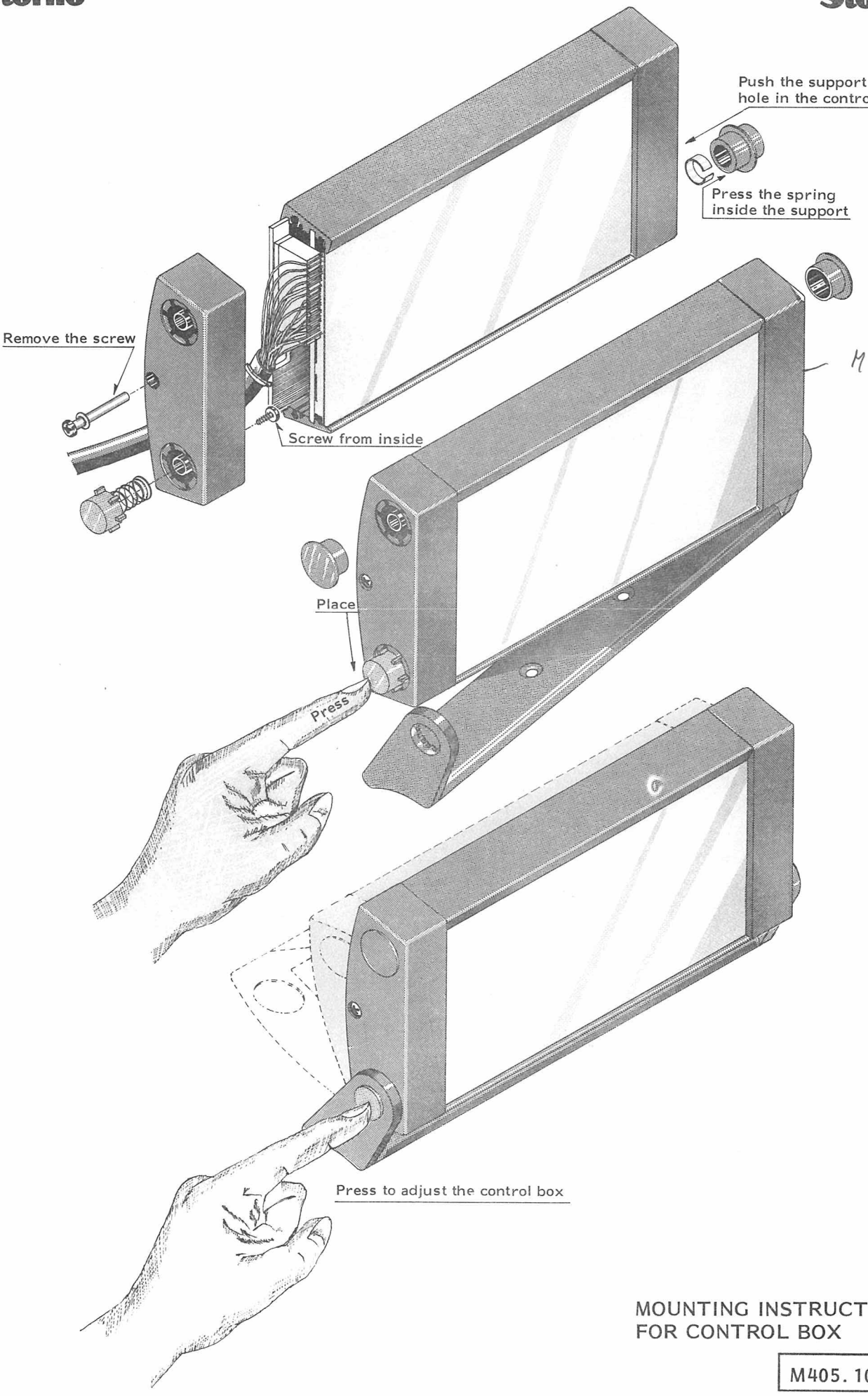

M 905 008 P2

MOUNTING INSTRUCTIONS
FOR CONTROL BOX

M405. 109

Storno

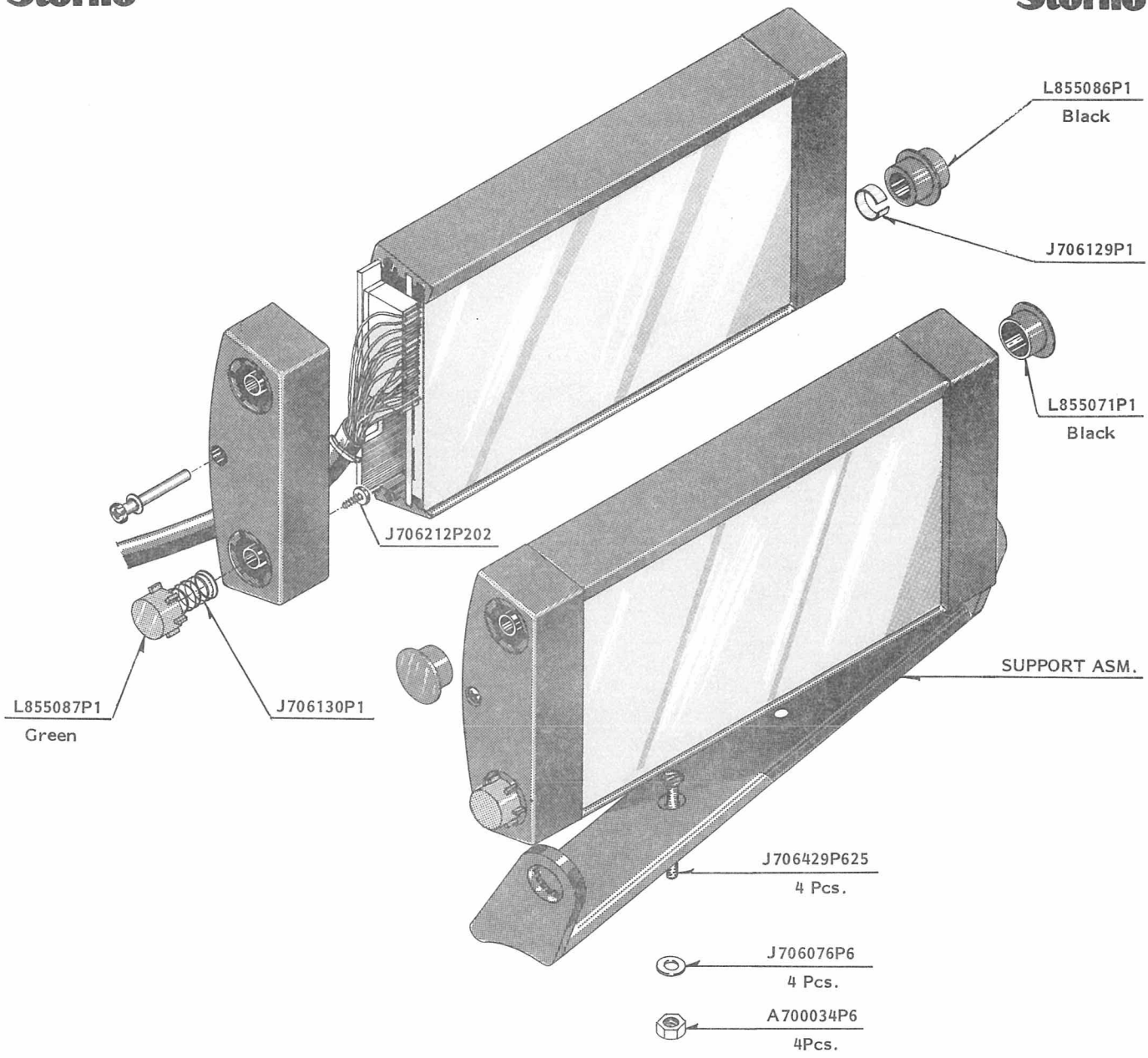

CONTROL HEAD TYPE	SUPPORT KIT CODE No.	SUPPORT ASM.
C91S0xxx0	J706428G2	K805064G2
C91S1xxx0 C91S2xxx0	J706428G5	K805064G5
C92S0xxx0 C92S1xxx0 C92S2xxx0 C99S23P00	J706428G1	K805064G1
SC91Sxxxx0	J706428G4	K805064G4
SC92Sxxxx0	J706428G3	K805064G3

SUPPORT KIT FOR CONTROL BOXES

Storno

Storno

NOTE 1:
WITH SELECT KEYPADS FOR DK AND N,
WITHOUT W1 SELECT KEYPADS FOR S AND SF

NOTE 2:
IF IGNITION SWITCH FUNCTION IS USED DISCONNECT R62

NOTE 3:
LOGIC LOW IGNITION SWITCH INPUT (< 0,5 V):
ENABLES 10-HOUR TIME OUT FUNCTION AND
HORN ALARM FUNCTION.
LOGIC HIGH IGNITION SWITCH INPUT (>2 V):
DISABLES 10-HOUR TIME OUT FUNCTION AND
HORN ALARM FUNCTION.
FLOATING IGNITION SWITCH INPUT (NOT CONNECTED):
DISABLES 10-HOUR TIME OUT FUNCTION AND
HORN ALARM FUNCTION (Q28)

CONTROL HEAD SC91P0X

REV. D | D 403.748

Storno

Storno

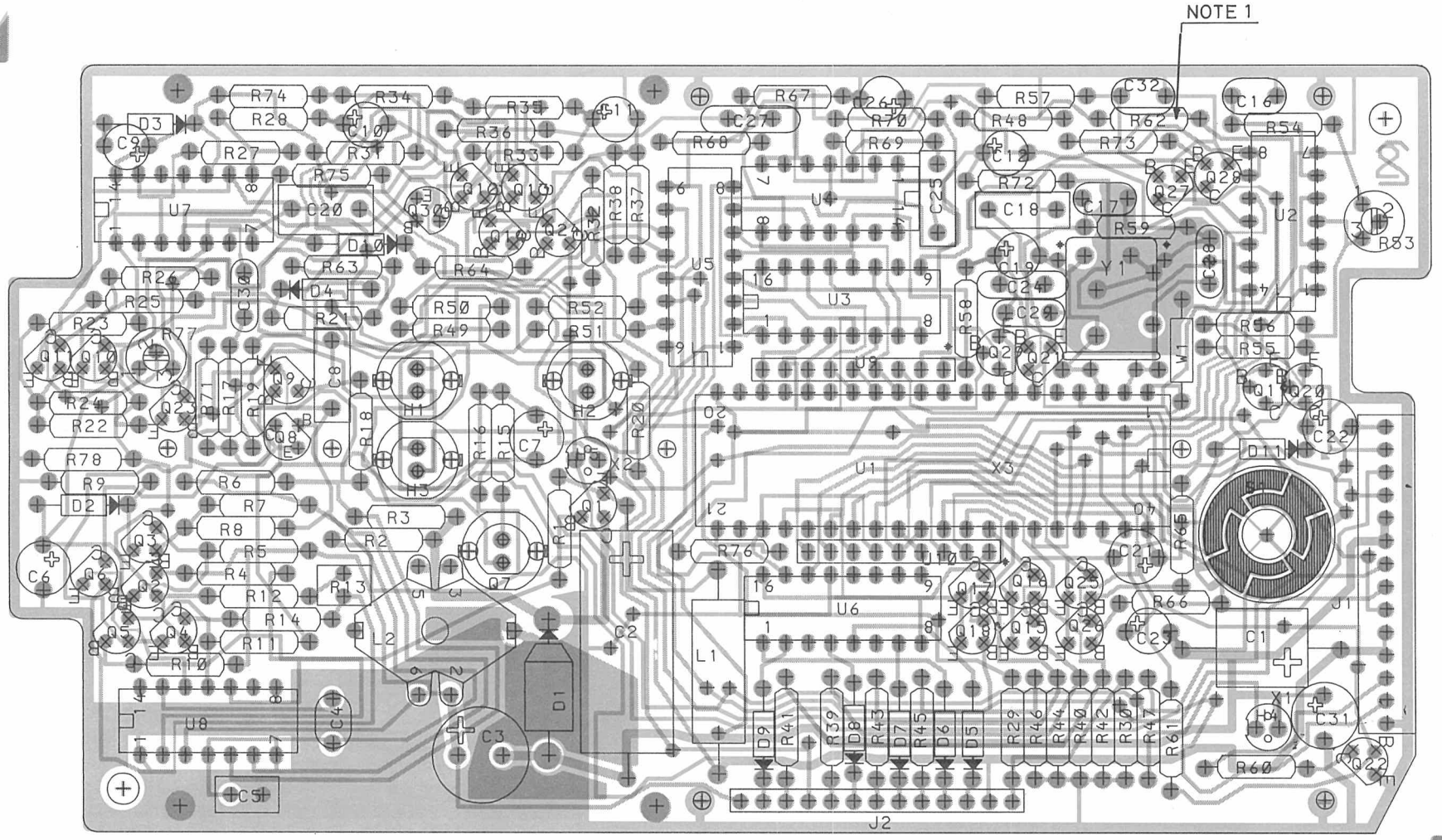

Storno

Storno

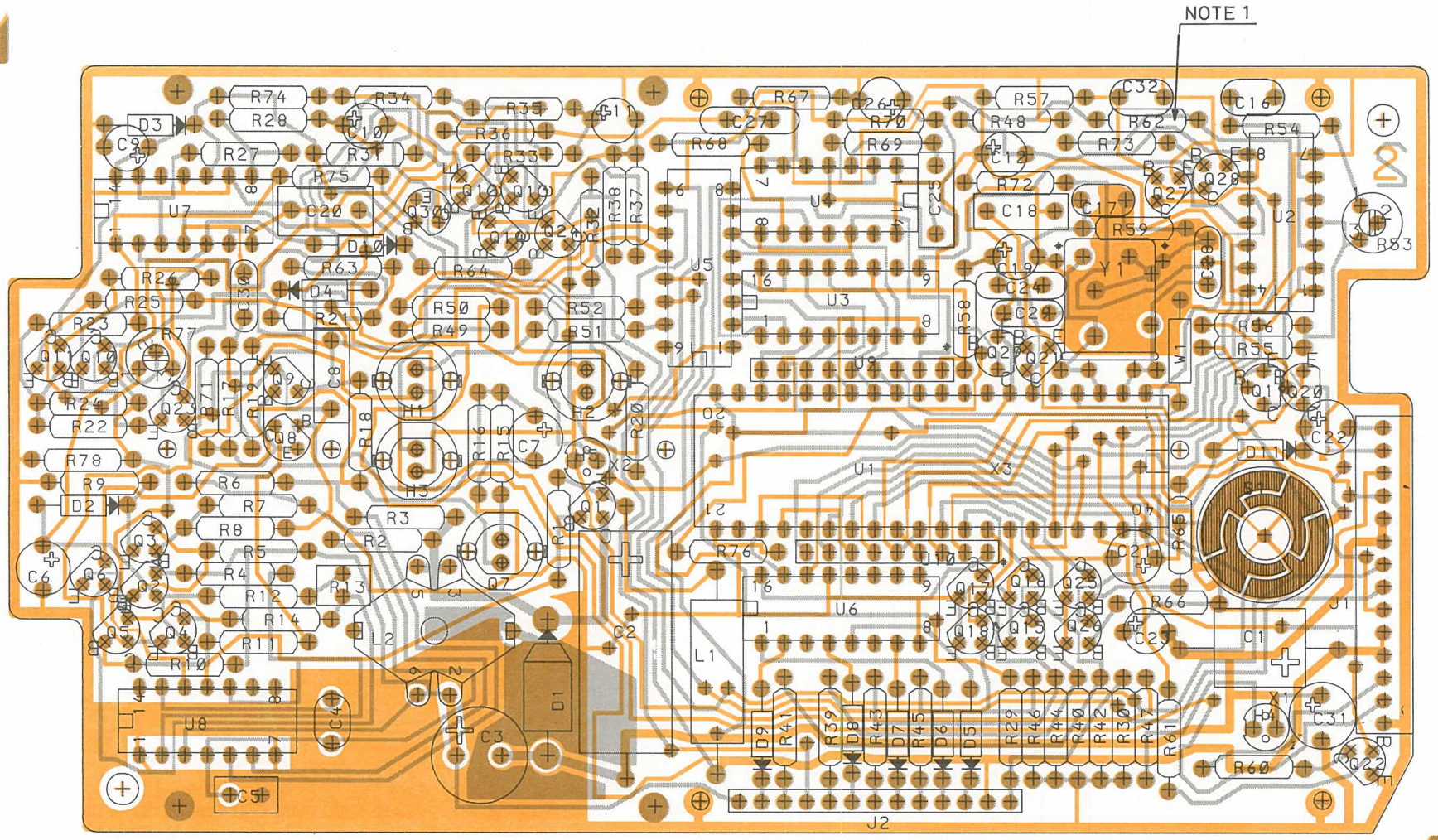

NOTE 1:
DISCONNECT R62 IF IGNITION SWITCH FUNCTION IS USED

CONTROL HEAD NMT SC91P0X
COMPONENT LAYOUT

REV. D | D403.747

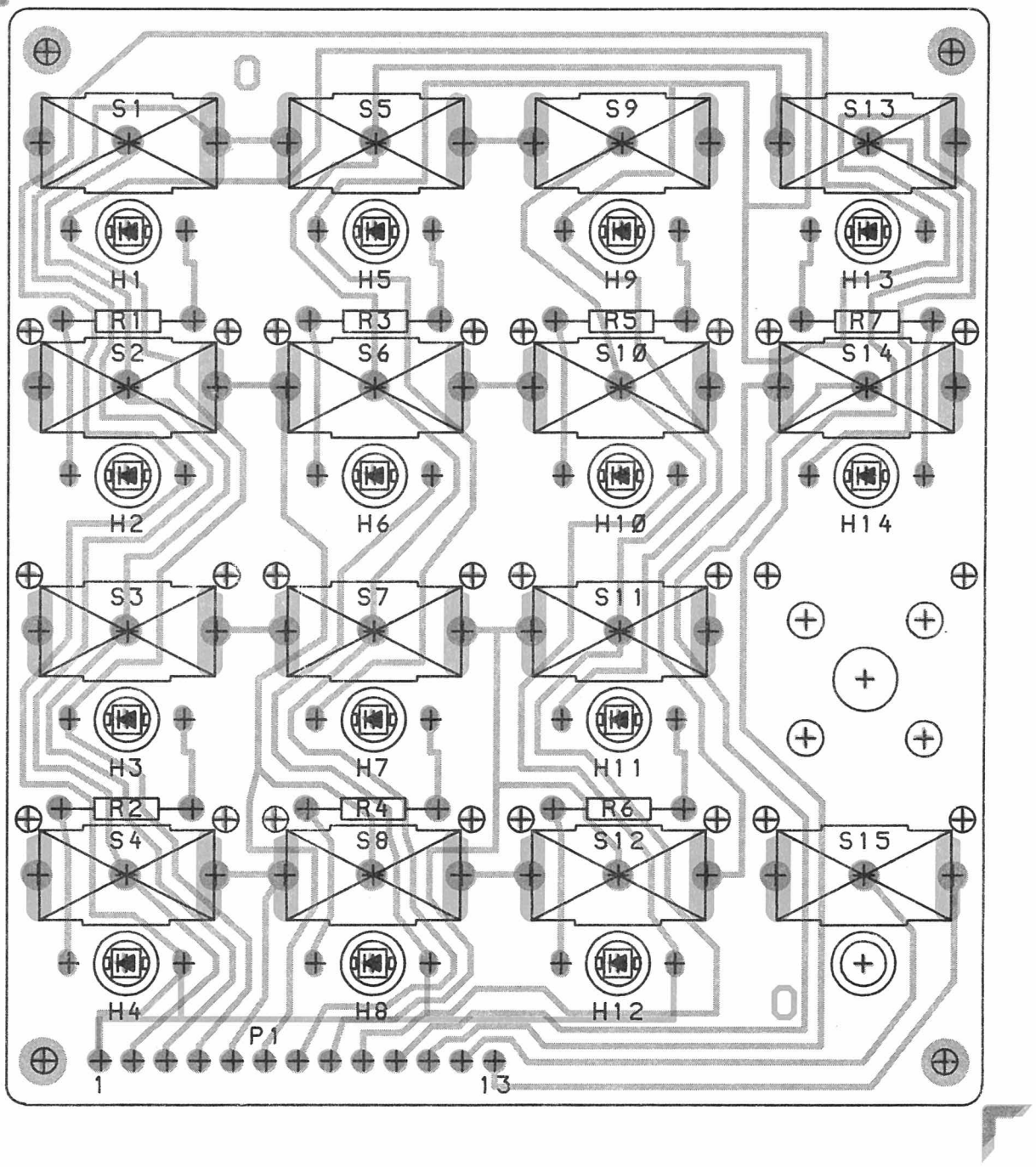

CONTROL HEAD SC91P
COMPONENT LAYOUT

19M905231 D403.167

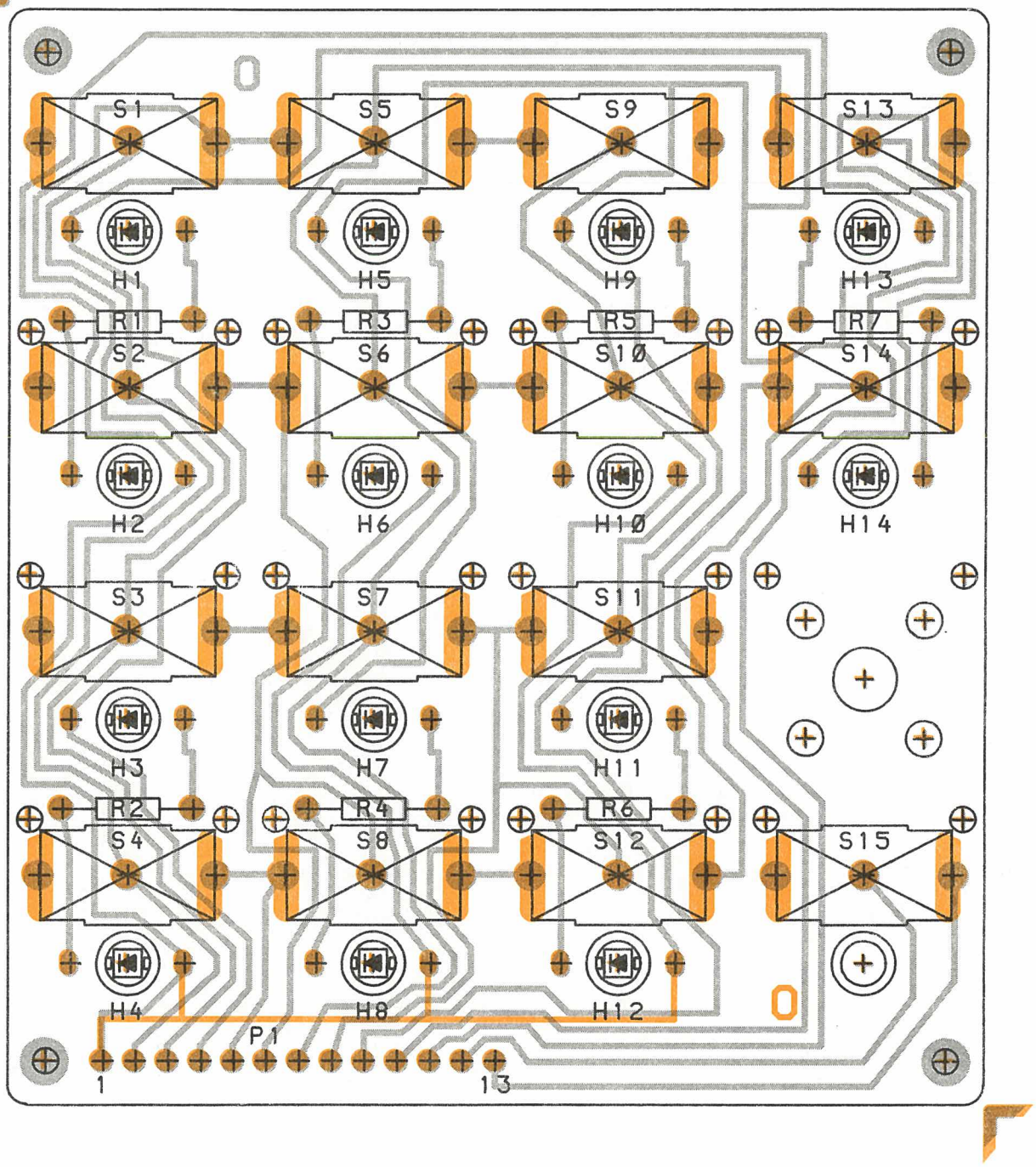

CONTROL HEAD SC91P
COMPONENT LAYOUT

19M905231 D403.167

Storno

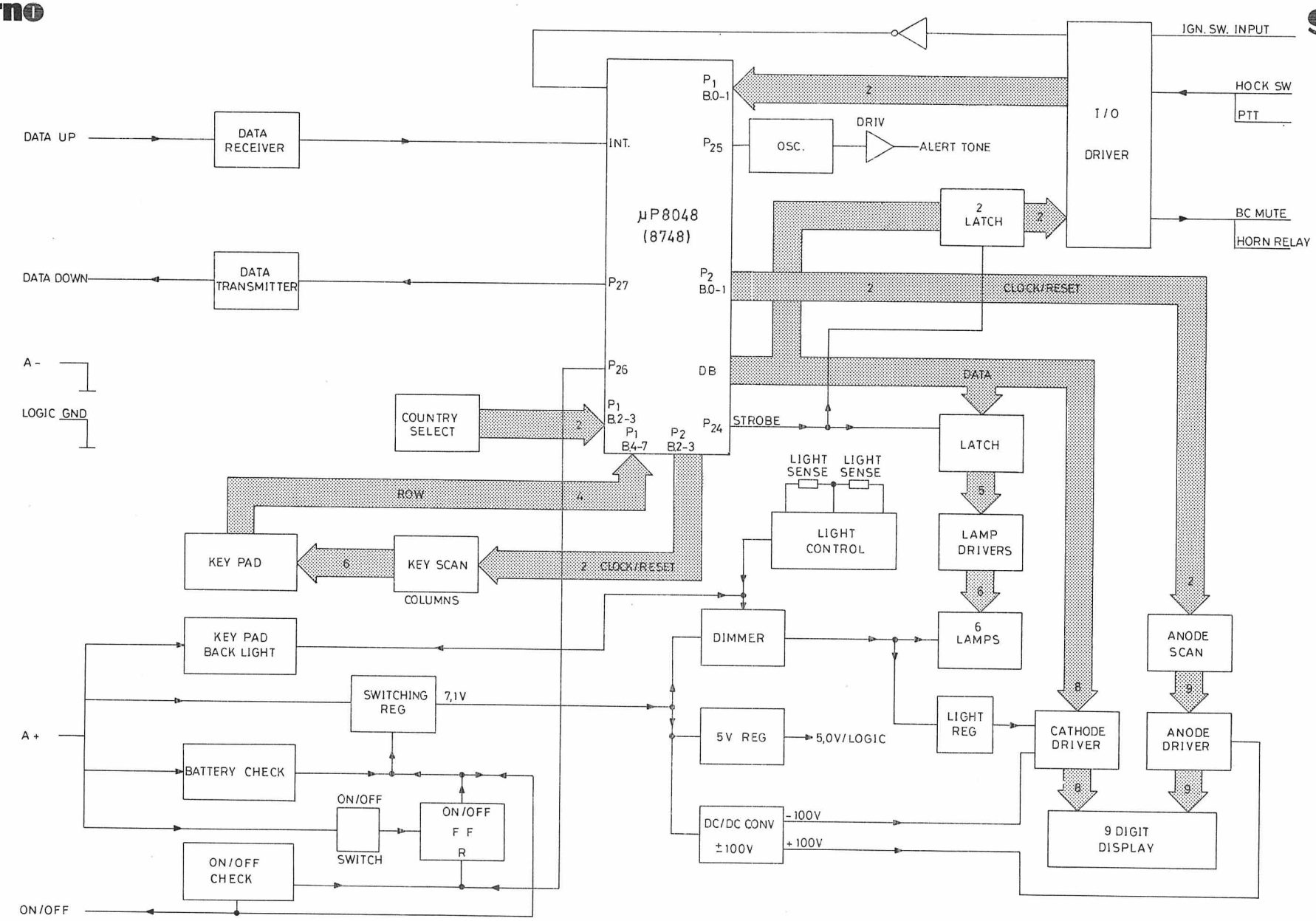

FUNCTIONAL DIAGRAM SC92P00

D403.067/2

ITEM NUMBER	DESCRIPTION
SC92P00D1	900 STORNO CONTROLBOX SC92 F. DENMARK
SC92P00N1	900 STORNO CONTROLBOX SC92 F. NORWAY
SC92P00S1	900 STORNO CONTROLBOX SC92 F. SWEDEN
SC92P00Y1	900 STORNO CONTROLBOX SC92 F. FINLAND

C O N T R O L B O X S U R V E Y :

M A I N M O D U L E S A N D P A R T S

SPECIAL REFERENCES	COMPONENT ITEM NUMBER	COMPONENT DESCRIPTION	QUANTITY TOTAL
	A700031P206	SCREW PAN HD M 2.0 X 6.0	6
	J706076P3	WASHER SPG 2.0 X 4.9	6
	J708276P1	WARRANTY CERTIFICATE	1
	J708277P1	COVER PLASTIC	1
SEE:X403.727/2	L855197G1	ASM DIS BD CB 90X	1
SEE:X403.726/3	M905165G3	ASM MAIN BOARD	1
	A700031P425	SCREW PAN HD M 3.0 X 25.0	2
	J706076P5	WASHER SPG 3.0 X 6.4	2
	J706241P1	NAME PLT	1
	J706427P2	PAPER	1
	J706436P1	LOCKING RING	2
	K805061G3	ASM SPT CB 9XX	1
SEE: BELOW	K805145G1	SCREEN DISPLAY F. N M T	1
SEE: BELOW	K805168G1	ASM CA CB 90X	1
	M905008P1	COV	1
	M905008P2	COV	1
SEE: BELOW	J706428G3	KIT SPT CB 90X	1
SEE:X403.878	L855176G1	ASM KEY BD CB90X=4X4 MATRIX	1
SEE:X403.728	L855177G6	KEY BD ASM CB90X=5X2 MATRIX	1

K805145G1	SCREEN DISPLAY ASM. N M T	
K805145P1	SCREEN DISPLAY	
L855150P1	CHASSIS	1
K805134P1	SCREEN DISPLAY, - N M T	1

K805168G1 :	ASM CABLE F. CB 90X :	
J706152P5	STRAP RET W BDL D19 NYL	2
J706156P5	CA 14 CORED	2
J706418P114	CONN PWB FEM 14 CKT	1
J706418P14	CONN PWB FEM 14 CKT	1
J707094P113	COV	1

SPECIAL REFERENCES	COMPONENT ITEM NUMBER	COMPONENT DESCRIPTION	QUANTITY TOTAL
	J706428G3 :	KIT, -SUPPORT F. CB 90X :	
	A700034P6	NUT HEX M-4.0X0.70	4
	J706076P6	WASHER SPG 4.0X8.5	4
	J706129P1	SPG	1
	J706130P1	SPG	1
	J706212P202	SCREW PAN HD SZ 4.0X6.4	1
	J706429P625	SCR	4
	K805064G3	ASM SPT	1
	L855071P1	COV	2
	L855086P1	SPT	1
	L855087P1	BRG	1

Storno

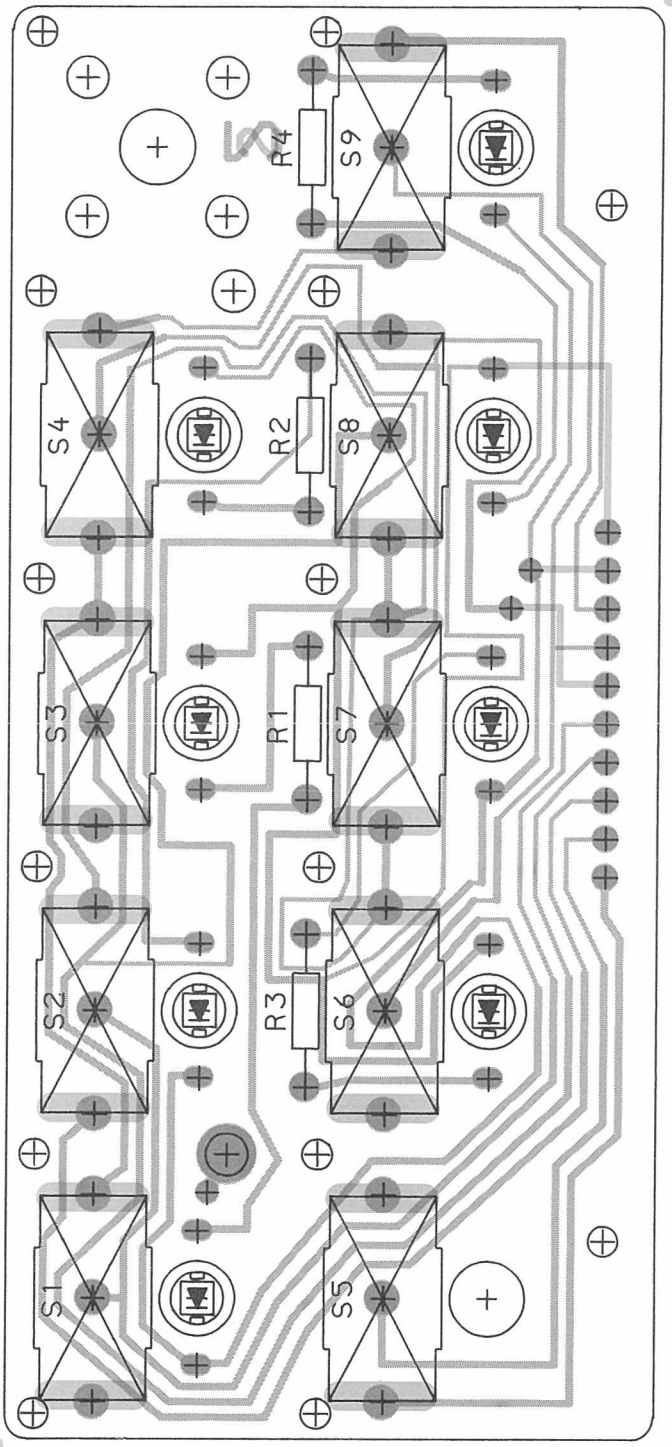

CONTROL HEAD SC92P
COMPONENT LAYOUT

19L855177 G1 | D403.168

Storno

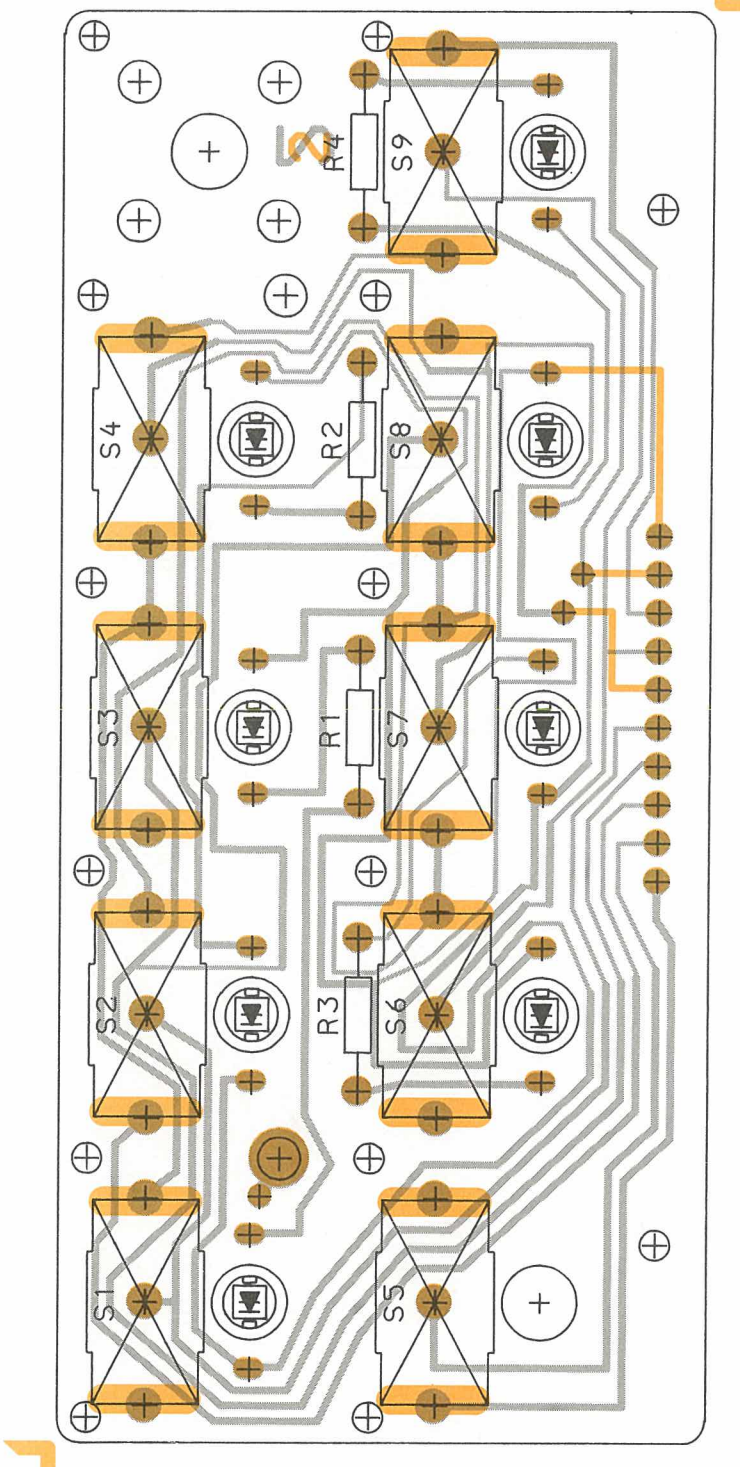

CONTROL HEAD SC92P
COMPONENT LAYOUT

19L855177 G1 | D403.168

ITEM NUMBER	DESCRIPTION
L855177G6	ASM KEY BD., 5 X 2 MATRIX, - F. N M T - 2ND. VERSION
M905162G1	A001 : ASM CONT BD

P A R T S L I S T :

CIRCUIT POSITION	COMPONENT ITEM NUMBER	COMPONENT DESCRIPTION	QUANTITY TOTAL
A001	M905162G1	ASM CONT BD	1
0002	M905126P1	COVER-FRAME F. BUTT.'S	1
0003 :	L855084G33 :	ASM BUTN : "V+" (VOL. UP) :	(1)
	K805049P1	SPG	1
	K805060P1	NAME PLT : SIGN.= "V+"	1
	K805177P4	CAP, BUTT. LENS : YELLOW	1
	L855184P1	BUTN	1
0004 :	L855084G34 :	ASM BUTN : "V-" (VOL. DWN) :	(1)
	K805049P1	SPG	1
	K805060P2	NAME PLT : SIGN.= "V-"	1
	K805177P4	CAP, BUTT. LENS : YELLOW	1
	L855184P1	BUTN	1
0005 :	L855084G35 :	ASM BUTN : "00" (ON/OFF) :	(1)
	K805049P1	SPG	1
	J706572P1	NAME PLT : SIGN.= "00"	1
	K805177P2	CAP, BUTT. LENS : CLEAR	1
	L855184P1	BUTN	1
0006 :	L855084G27 :	ASM BUTN: "S1" (PRS. BARCOD):	(1)
	K805049P1	SPG	1
	K805060P27	NAME PLT : SIGN.= "S1"	1
	K805177P3	CAP, BUTT. LENS : RED	1
	L855184P1	BUTN	1
0008 :	L855084G29 :	ASM BUTN : "🔊" (LS IN/0UT) :	(1)
	K805049P1	SPG	1
	K805060P29	NAME PLT : SIGN.= "🔊"	1
	K805177P4	CAP, BUTT. LENS : YELLOW	1
	L855184P1	BUTN	1
0009 :	L855084G30 :	ASM BUTN : "◀▶" (DISPL. SW.):	(1)
	K805049P1	SPG	1
	K805060P30	NAME PLT : SIGN.= "◀▶"	1
	K805177P3	CAP, BUTT. LENS : RED	1
	L855184P1	BUTN	1
0010 :	L855084G31 :	ASM BUTN : "▶" (DATA-TRANS):	(1)
	K805049P1	SPG	1
	K805060P31	NAME PLT : SIGN.= "▶"	1
	K805177P3	CAP, BUTT. LENS : RED	1
	L855184P1	BUTN	1

CIRCUIT POSITION	COMPONENT ITEM NUMBER	COMPONENT DESCRIPTION	QUANTITY TOTAL
0011 :	L855084G53 :	ASM BUTN : "⊏" (HORN-ALARM):	(1)
	K805049P1	SPG	1
	K805060P44	NAME PLT : SIGN.= "⊏"	1
	K805177P3	CAP, BUTT. LENS : RED	1
	L855184P1	BUTN	1
0012 :	L855180G1 :	ASM BUTN : "DK , S , N , SF":	(1)
	J706588P1	NAME PLT : SIGN.= "DK,S,N,SF"	1
	L855401P1	CAP, BUTT. LENS : RED	1
	K805118P1	BUTN	1
0013	J706498P1	SPRING	1
0014	A701488P3	RING RETAINING	1
0017	K805242P1	GUIDE PLATE	1
0022 :	L855084G79 :	ASM BUTN : "CL" (CLEAR LAST):	(1)
	K805049P1	SPG	1
	K805060P74	NAME PLT : SIGN.= "CL"	1
	K805177P3	CAP, BUTT. LENS : RED	1
	L855184P1	BUTN	1
A001 :	M905162G1 :	ASM CONT BD :	
H001	J706022P2	DIO, LED - YELL., HLMP 6400	1
H002	J706022P2	DIO, LED - YELL., HLMP 6400	1
H003	J706022P2	DIO, LED - YELL., HLMP 6400	1
H004	J706022P3	DIO, LED - RED , HLMP 6300	1
H005	J706022P3	DIO, LED - RED , HLMP 6300	1
H006	J706022P3	DIO, LED - RED , HLMP 6300	1
H007	J706022P3	DIO, LED - RED , HLMP 6300	1
H008	J706022P3	DIO, LED - RED , HLMP 6300	1
P001	J706789P10	CONN	1
R00?	J706035P22	RES DEPC 390R 5% 1/10W	1
R00?	J706035P22	RES DEPC 390R 5% 1/10W	1
R00?	J706035P22	RES DEPC 390R 5% 1/10W	1
R00?	J706035P22	RES DEPC 390R 5% 1/10W	1
0004	J706347P1	LAMP SOC	1
0005	J706612P1	SW	9
0006	J706612P2	CONTACT	9
0007	K805163P1	LAMP SOC	8
0008	J706315P2	SPACER	2

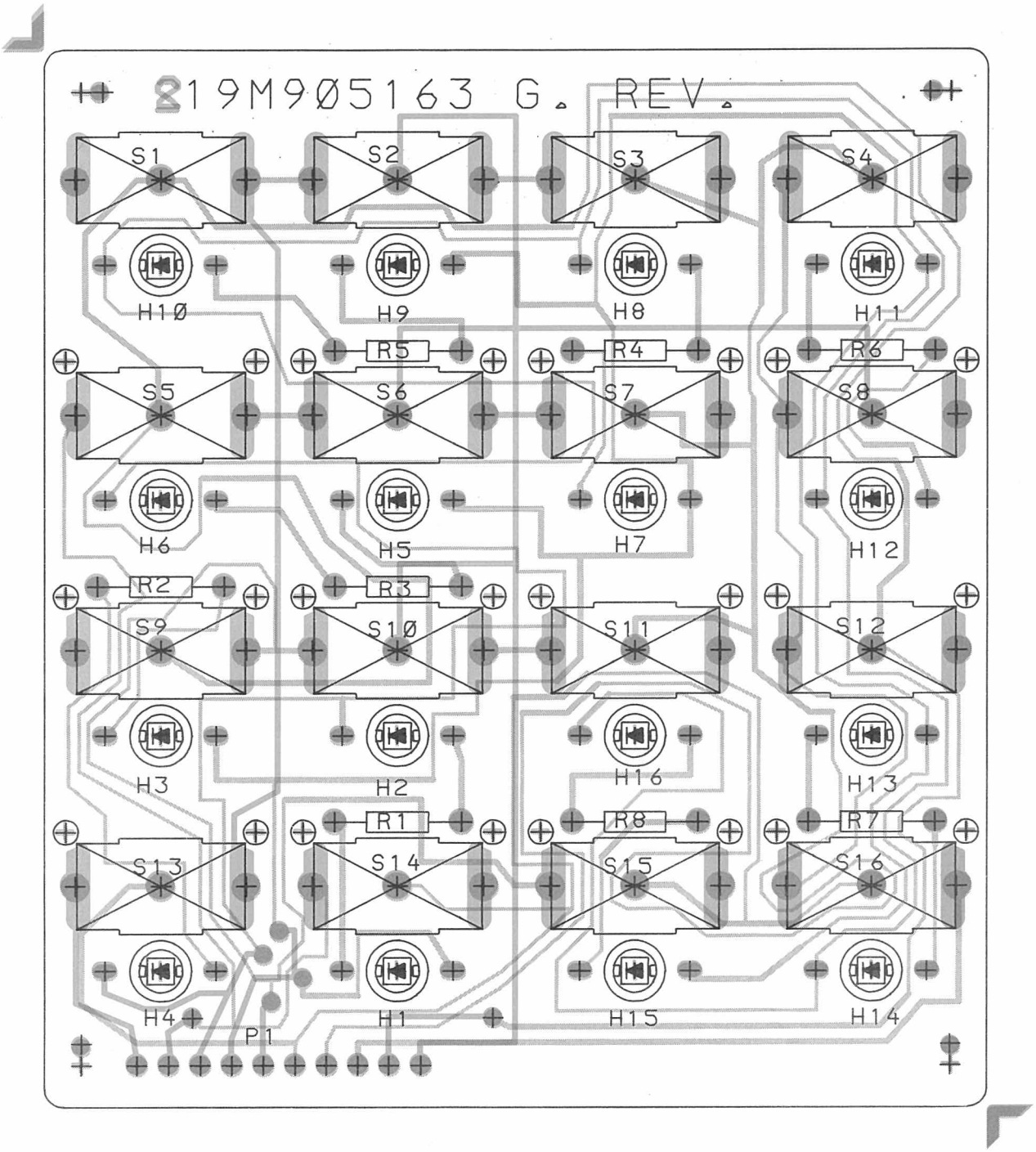

CONTROL HEAD SC92 P
COMPONENT LAYOUT

19M905163G1 D403.169

Storno

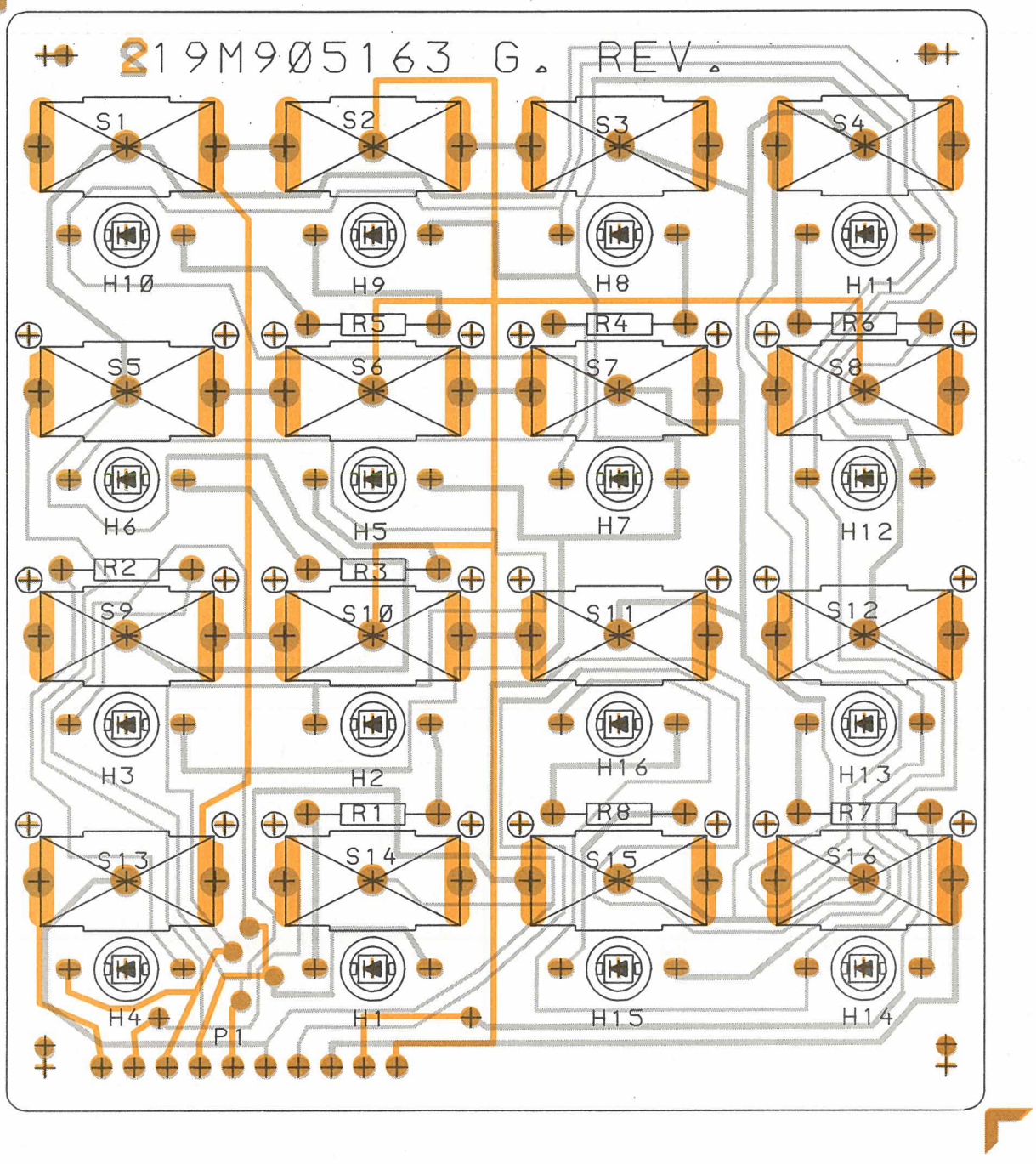

CONTROL HEAD SC92P
COMPONENT LAYOUT

19M905163G1 D403.169

Storno

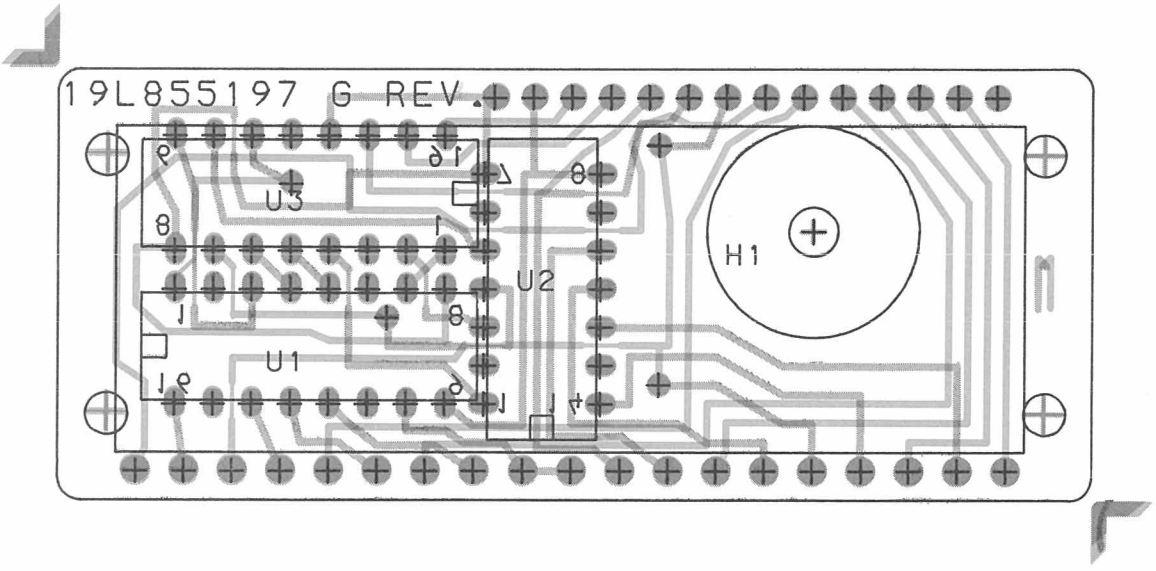

DISPLAY SC92P
COMPONENT LAYOUT

19L855197G1 D403.171

Storno

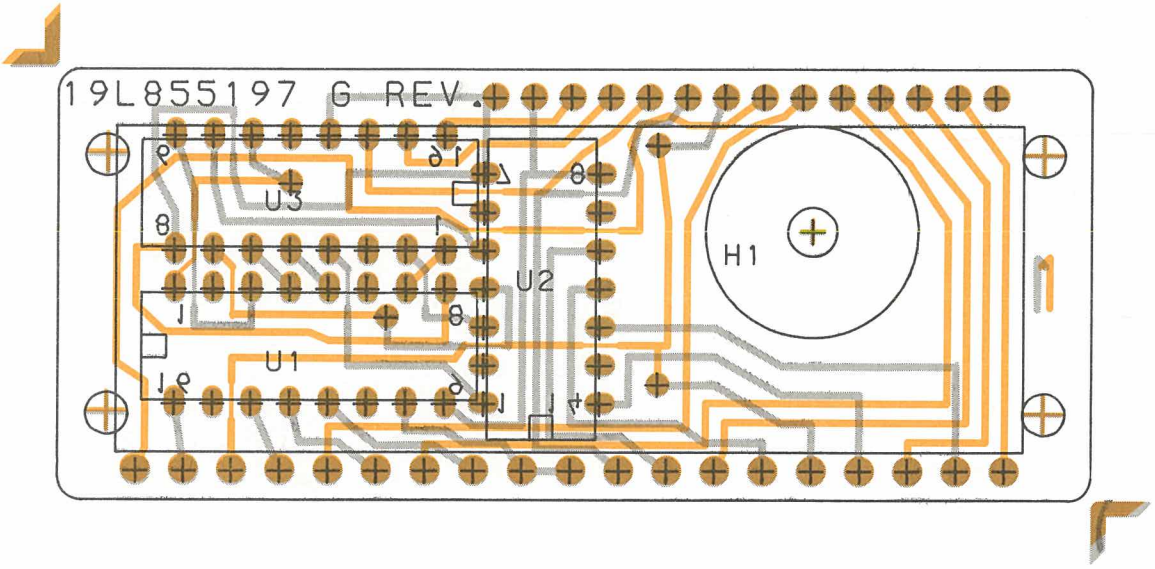

DISPLAY SC92P
COMPONENT LAYOUT

19L855197G1 D403.171

ITEM NUMBER	DESCRIPTION
L855197G1	ASM DIS BD F. SC92P0X

P A R T S L I S T :

CIRCUIT POSITION	COMPONENT ITEM NUMBER	COMPONENT DESCRIPTION	QUANTITY TOTAL
A001	K805203G1	ASM DISPL.(BURROUGHS BR09250M)	1
U001	J706227P2	INT CKT UDS6144A(SIX DR)	1
U002	J706227P1	INT CKT UDS6144(FOUR DR)	1
U003	A700029P12	IC DIG CNTR 4017B	1
0002	M905195P1	BD PW	1
0008	J706315P3	SPACER	4
0009	J706359G4	LEAD FRAME MODF	1

Storno

Storno

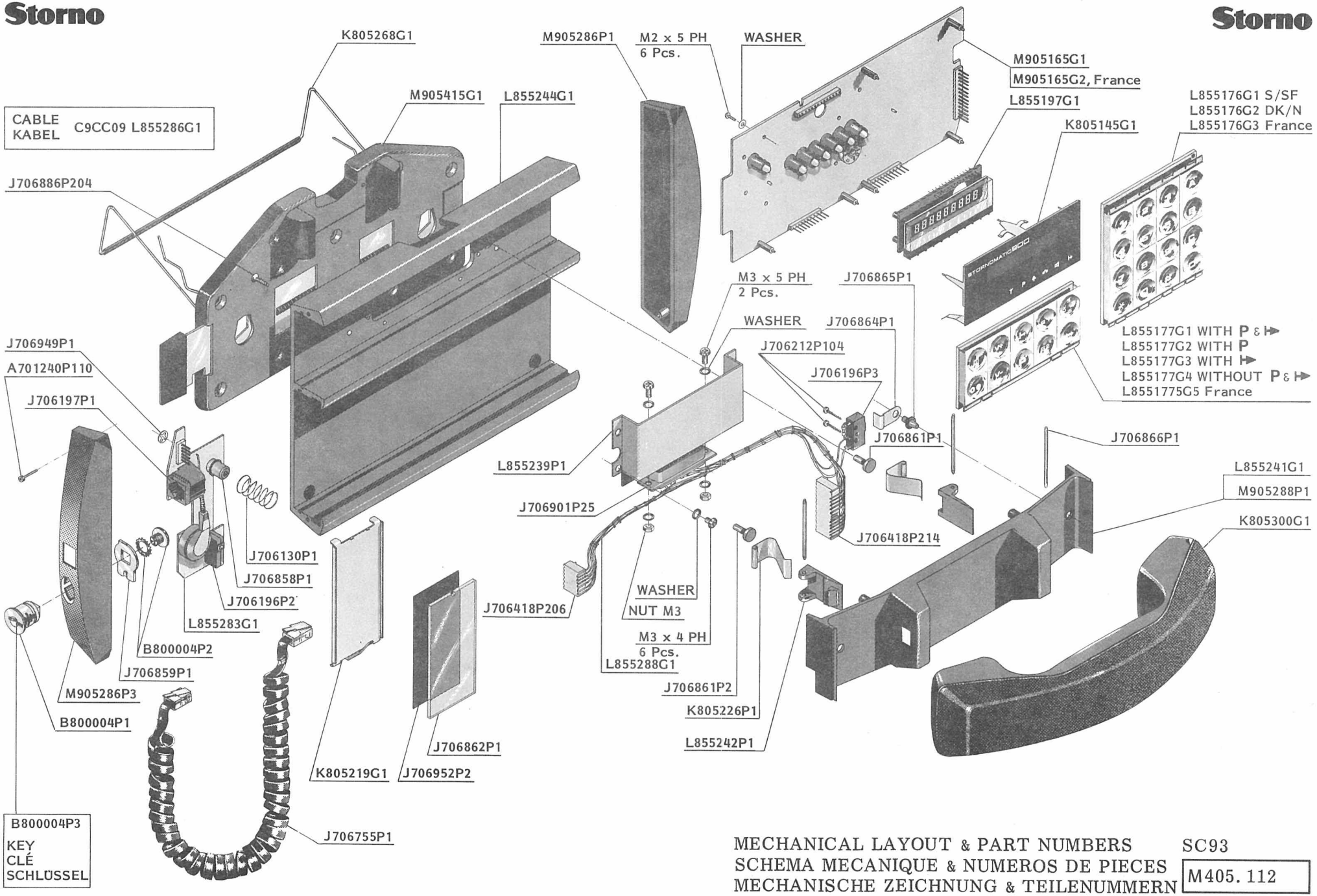

MECHANICAL LAYOUT & PART NUMBERS
SCHEMA MECANIQUE & NUMEROS DE PIECES
MECHANISCHE ZEICHNUNG & TEILENUMMERN

SC93

M405. 112

ITEM NUMBER	DESCRIPTION
SC93P00D1	900 STORNO CONTROLBOX SC93 F. DENMARK
SC93P00N1	900 STORNO CONTROLBOX SC93 F. NORWAY
SC93P00S1	900 STORNO CONTROLBOX SC93 F. SWEDEN
SC93P00Y1	900 STORNO CONTROLBOX SC93 F. FINLAND

C O N T R O L B O X S U R V E Y :

M A I N M O D U L E S A N D P A R T S

SPECIAL REFERENCES	COMPONENT ITEM NUMBER	COMPONENT DESCRIPTION	QUANTITY TOTAL
SEE:M405.112/2	A700031P206	SCREW PAN HD M-2.0 X 6.0	6
SEE:M405.112/2	J706076P3	WASHER SPG 2.0 X 4.9	6
	J708276P1	WARRANTY CERTIFICATE	1
SEE:M405.112/2	J708277P1	COVER PLASTIC	1
SEE:X403.727/2	L855197G1	ASM DIS BD CB 90X	1
SEE: BELOW	L855283G1	TB 901	1
SEE:X403.726/3	M905165G3	ASM MAIN BOARD	1
	J708804P1	INSTRUCTION	1
SEE:M405.112/2	A701240P110	SCREW SOC HD M-2.0 X 10.0	4
SEE:M405.112/2	B800004P3	KEY	2
SEE:M405.112/2	J706241P1	NAME PLT	1
SEE:M405.112/2	J706427P2	PAPER	1
SEE:M405.112/2	J706562P1	LABEL,ADH	1
SEE:M405.112/2	J706861P1	PIN	1
SEE:M405.112/2	J706861P2	PIN	1
SEE:M405.112/2	J706862P1	PLATE	1
SEE:M405.112/2	J706886P204	SCR	4
SEE:M405.112/2	J706952P2	PAPER	1
SEE:M405.112/2	K805145G1	SCREEN DISPLAY F. N M T	1
SEE: BELOW	K805219G1	CHASSIS ASM	1
SEE: BELOW	K805225G1	COV ASM SC93	1
SEE:X403.552/2	K805300G1	C9MT04	1
SEE:M405.112/2	L855239P1	SHIELD	1
SEE: BELOW	L855241G1	ASM HOLDER SC93	1
SEE: BELOW	L855244G1	CABINET ASM	1
SEE: BELOW	L855288G1	CABLE ASM	1
SEE:M405.112/2	M905286P1	COVER	1
SEE: BELOW	M905415G1	ASM FRAME	1
SEE:X403.878	L855176G1	ASM KEY BD CB90X=4X4 MATRIX	1
SEE:X403.728	L855177G6	KEY BD ASM CB90X=5X2 MATRIX	1

SEE:M405.112/2 L855283G1 : TB 901 :

A700072P59	CONN PWB MALE 06 CKT	1

SPECIAL REFERENCES	COMPONENT ITEM NUMBER	COMPONENT DESCRIPTION	QUANTITY TOTAL
	J706130P1	SPG	1
	J706196P2	SWITCH PUSH E61-20A	1
	J706197P1	CONN PWB 6 CKT	1
	J706594P1	EARPHO	1
	J706629G2	ASM CA SC93	1
	J706858P1	PIN	1
	J706949P1	WASH LOCK	1
	M905359P1	BD PW	1
	K805221P1	SPRING	1
	L855233P1	CHASSIS	1
SEE:M405.112/2	K805225G1 :	COVER ASM SC93 :	
	B800004P1	LOCK	1
	B800004P2	CAM SCR WASH	1
	J706859P1	CAM	1
	M905286P3	COVER	1
SEE:M405.112/2	L855241G1 :	ASM HOLDER F. SC93 :	
	A700019P23	RES DEPC 68R 5% 1/4W	1
	J706196P3	SWITCH PUSH E61-10A	1
	J706212P104	SCREW PAN HD SZ 2.0X9.5	2
	J706864P1	SPRING	1
	J706865P1	PIN	1
	J706866P1	PIN	3
	K805226P1	SPRING	2
	L855242P1	BRACKET	2
	M905288P1	HOLDER	1
SEE:M405.112/2	L855244G1 :	CABINET ASM.:	
	J707145P1	BUMPER	4
	M905290G1	ASM EXTRUSION	1
SEE:M405.112/2	L855288G1 :	CABLE ASM.:	
	J706418P206	CONN PWB FEM 06 CKT	1
	J706418P214	CONN PWB FEM 14 CKT	1
	J706901P25	CONN 25-POL	1
	J707210P1	WIRE 0.220 SQ BR	
	J707210P100	WIRE 0.220 SQ BK	
	J707210P2	WIRE 0.220 SQ RED	
	J707210P3	WIRE 0.220 SQ OR	
	J707210P4	WIRE 0.220 SQ Y	
	J707210P5	WIRE 0.220 SQ G	
	J707210P58	WIRE GRAY/GREEN	
	J707210P6	WIRE 0.220 SQ BL	
	J707210P7	WIRE 0.220 SQ VI	
	J707210P8	WIRE 0.220 SQ GR	
	J707210P82	WIRE GRAY/RED	
	J707210P89	WIRE 0.220 SQ GR/WHT	

SPECIAL REFERENCES	COMPONENT ITEM NUMBER	COMPONENT DESCRIPTION	QUANTITY TOTAL
	J707210P9	WIRE 0.220 SQ WHT	
	J707210P90	WIRE 0.220 SQ WHT/BK	
	J707210P91	WIRE 0.220 SQ WHT/BR	
	J707210P95	WIRE 0.220 SQ WHT/G	
	J707210P96	WIRE 0.220 SQ WHT/BL	
SEE:M405.112/2	M905415G1 :	ASM FRAME :	
	J707188P1	SPRING	2
	J707218G1	KIT	1
	K805289P1	PLATE	1
	K805289P2	PLATE	1
	K805290P1	BUTTON	1
	M905414P2	FRAME	1

Storno

WIRING CONNECTIONS

IN SC93

INTERNAL CABLE CONNECTIONS

The internal cable interconnects the control signals to the radio from the external cable to CB mainboard and the handset. The internal cable is built-up by single wires connected to 3 different connectors and one Hook Switch.

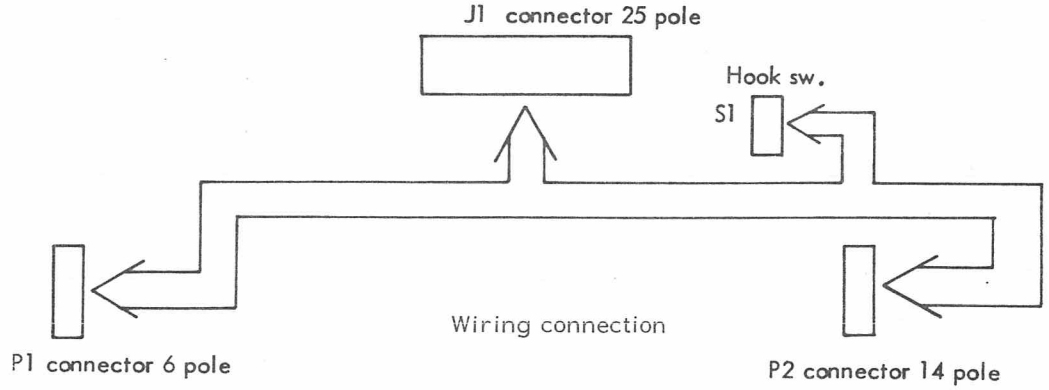

Function	J 1 pin	P1 pin	P2 pin	S1 pin
Mc low	1 to 2			
Mc low	3	3		
Tlf	4	4		
Logic gnd	5			N·C
Logic gnd	6		14	
	7			
A -	8	6		
A-	9		6	
A-	10		5	
	11			
LS low	12 to 13			
Mc Hi	14 to 15			
	16			
HS mic	17	2		
on/off	18		13	
Data down	19		12	
A +	20		11	
A +	21		10	
Data up	22		9	
Horn	23		7	
LS Hi	24 to 25			
Alert		5	1	
PTT		1	4	
Hook			3	NO

all cable wire size
0.22 mm^2 AWG 24

MULTICABLE CONNECTIONS

Function	P1 pin	P2 pin	P2 pin	wire size Sq.mm/ AWG	
HS mic	18	17		0,35/22	twisted
MC HI	19	15		0,35/22	
TLF	20	4		0,35/22	twisted
Logic gnd	14	5		0,35/22	
A -	15	9		0,35/22	twisted
A +	17	20		0,35/22	
LS low	6	12		0,35/22	twisted
LS HI	10	24		o,35/22	
MC low	21	2		0,35/22	twisted
on/off	16	18		0,32/22	
Data up	7	22		0,35/22	twisted
Data down	11	19		0,35/22	
A -	13 NC	8 NC	NC	0,35/22 shield	
A +		20	21	0,2/32	tinned
Logic gnd		5	6	0,2/32	tinned
A -		9	10	0,2/32	tinned
MC low		2	3	0,2/32	tinned

NC = No connections.

BATTERY CABLE

Function	P1 pin	wire size
A - (12V and 24V neg gnd)	38	4 Sq.mm
A + 12V	37	4 sq.mm
or		
A + 24V	40.	

Storno

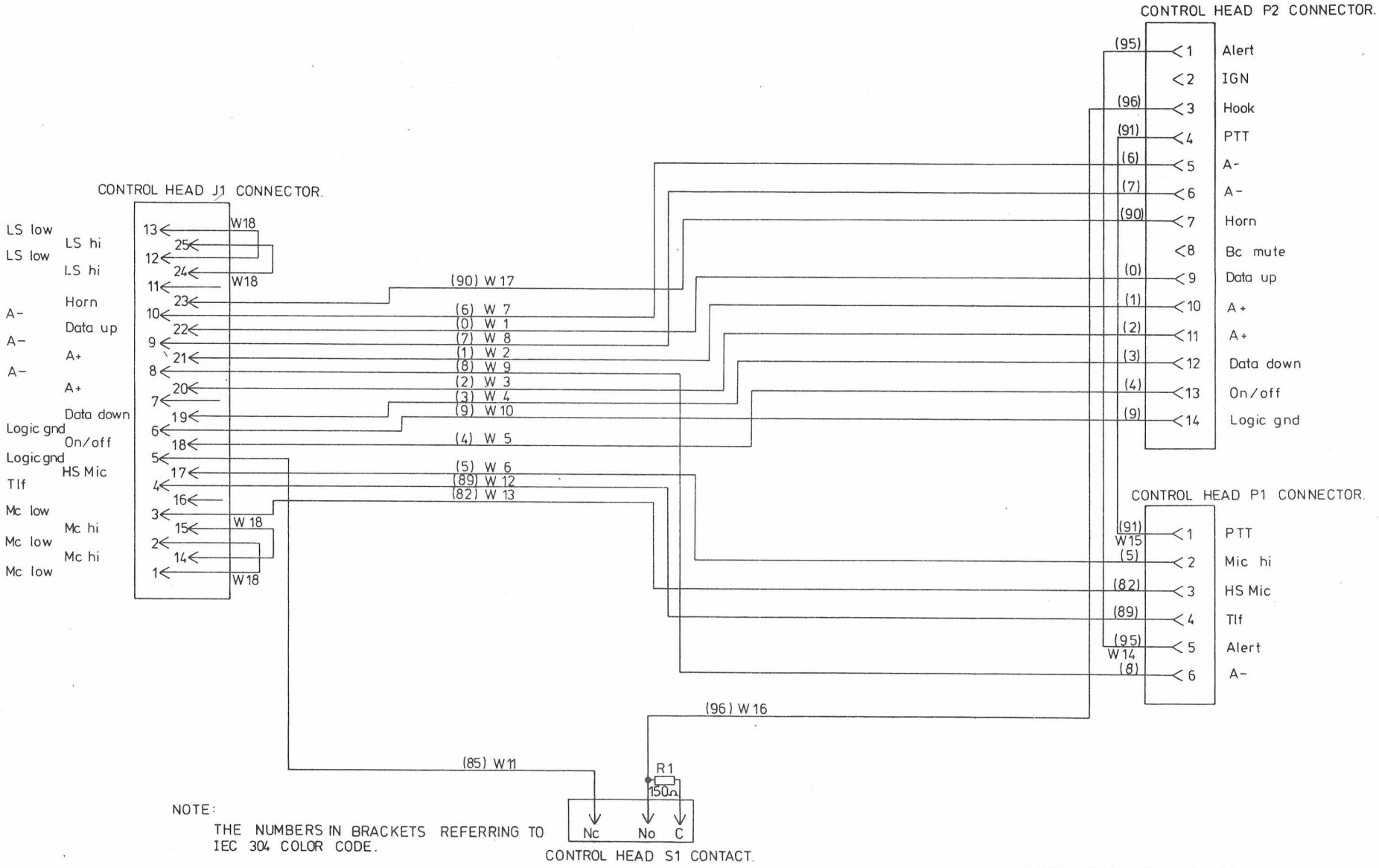

NOTE:
THE NUMBERS IN BRACKETS REFERRING TO IEC 304 COLOR CODE.

CABLE INTERCONNECTIONS IN SC93

D403.792

Storno

CABLE KITS

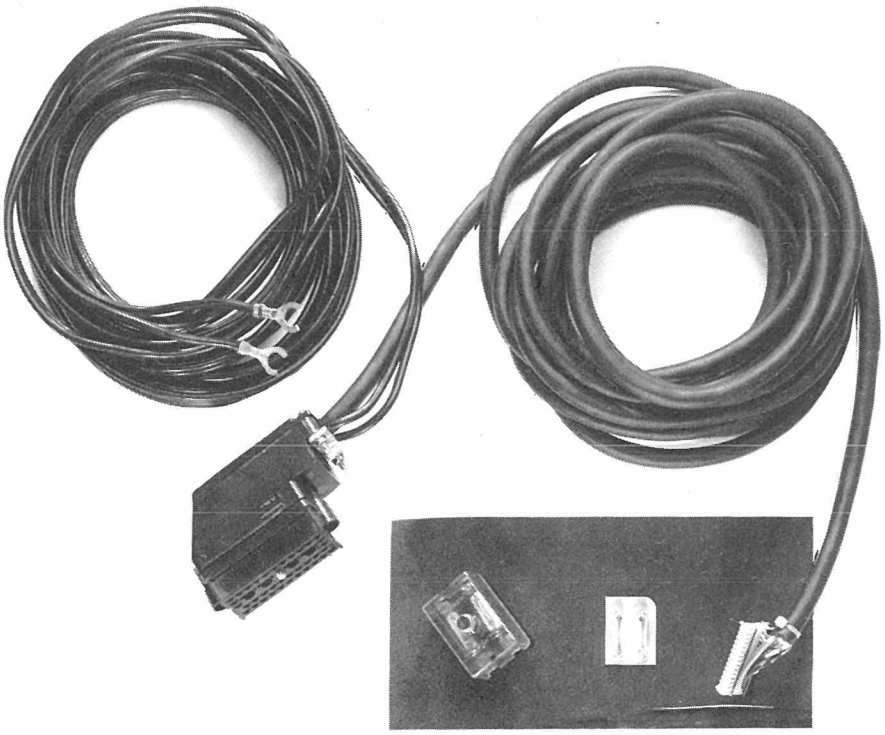

C9CC05: 12 V, 10 W duplex
C9CC06: 24 V

The cable kit consists of a control cable, a battery cable and a fuse box. The control cable between the radio and the junction box has 13 conductors of which 6 are for medium current (2 for speaker and 4 for power control) and the rest for small signals. The radio uses 36 male round pins as signal contacts. Four heavy, round pins are used for high current connections, and the other part of the contact is a female split contact which fit over the appropriate male pins to complete the connection.
The radio will not be weatherproof when the cable is disconnected from the front panel.

Storno

Storno

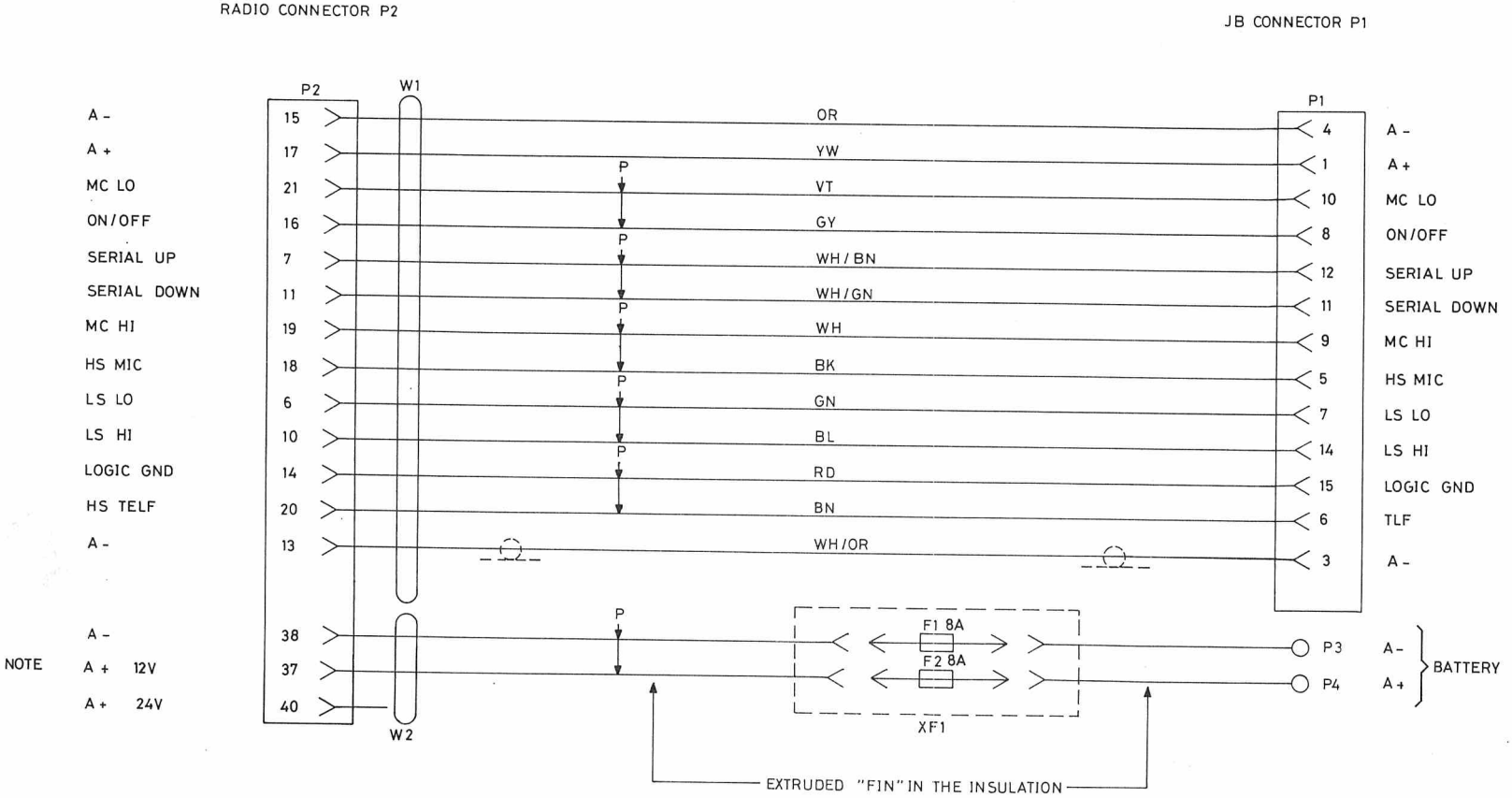

NOTE:
C9CC05 - 12V CONNECT TO PIN 37 AS SHOWN
C9CC06 - 24V CONNECT TO PIN 40

CABLE C9CC05,C9CC06

D403.137

Storno

C9JB04

JUNCTION BOX

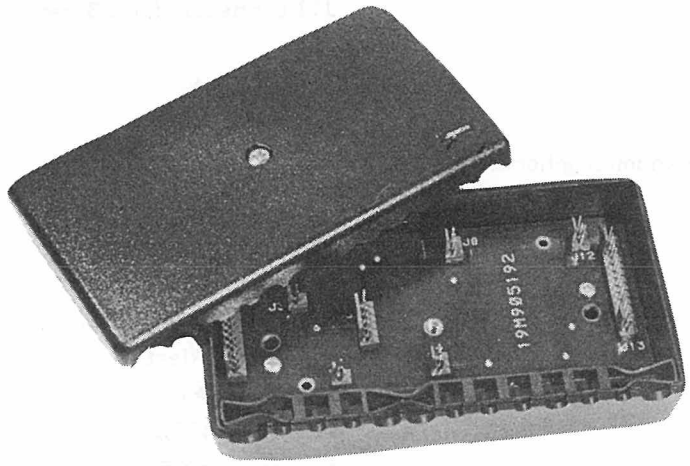

C9JB04 is a junction box interconnecting the radio, the CB and the assessories. The C9JB04 is always used in connection with CB's (control head). The C9JB04 consists of a PWB with a number of connectors, J1 - J13, a housing and a relay.
The connectors are as follows:

J1	Cable to radio (CC90x)
J2	Loudspeaker (LS)
J3	Fixed microphone (MC)
J4	External PTT
J5	Handset or handmicrophone (MT/MC)
J7	Ignition switch
J8	Broadcast (BC) radio mute
J12	Horn relay
J13	Cable to CB

TECHNICAL SPECIFICATIONS

J1 connector: cable to radio (CC90x):

Pin 1	A+
Pin 2	A+
Pin 3	A-
Pin 4	A-
Pin 5	HS MIC
Pin 6	Tlf.
Pin 7	LS low
Pin 8	ON/OFF
Pin 9	MC high
Pin 10	MC low
Pin 11	Serial down
Pin 12	Serial up
Pin 13	Not connected
Pin 14	LS high
Pin 15	Logic gnd

J2 connector for LS (loudspeaker):

Pin 1	LS low
Pin 2	LS high

J3 connector for fixed microphone (MC):

Pin	1	MC low
Pin	2	MC high

J4 connector for external PTT key:

Pin	1	Logic gnd
Pin	2	$\overline{\text{PTT}}$

J5 connector for handset or handmicrophone:

Pin	1	TIf.
Pin	2	HS MIC
Pin	3	MC low
Pin	4	$\overline{\text{Hook switch}}$
Pin	5	Alert
Pin	6	Logic gnd.

J7 connector for ignition switch input:

Pin	1	Not connected
Pin	2	Ign. sw.
Pin	3	Not connected

J8 connector for broadcast (BC) radio mute:

Pin	1	Not connected
Pin	2	$\overline{\text{Mute out}}$
Pin	3	A+

J12 connector for horn relay:

Pin	1	N.C.
Pin	2	Horn relay
Pin	3	A+

J13 connector for CB cable:

Pin	1	A+
Pin	2	A-
Pin	3	ON/OFF
Pin	4	Ign. sw.
Pin	5	Serial down
Pin	6	Serial up
Pin	7	Logic gnd.
Pin	8	Alert
Pin	9	A+
Pin	10	$\overline{\text{Hook switch}}$
Pin	11	$\overline{\text{PTT}}$
Pin	12	$\overline{\text{Horn relay}}$
Pin	13	A-
Pin	14	$\overline{\text{BC radio mute}}$

Temperature range

-40° C to $+70^{o}$ C

Dimensions:

L x W x H (mm): 141 x 77 x 41

Storno

Storno

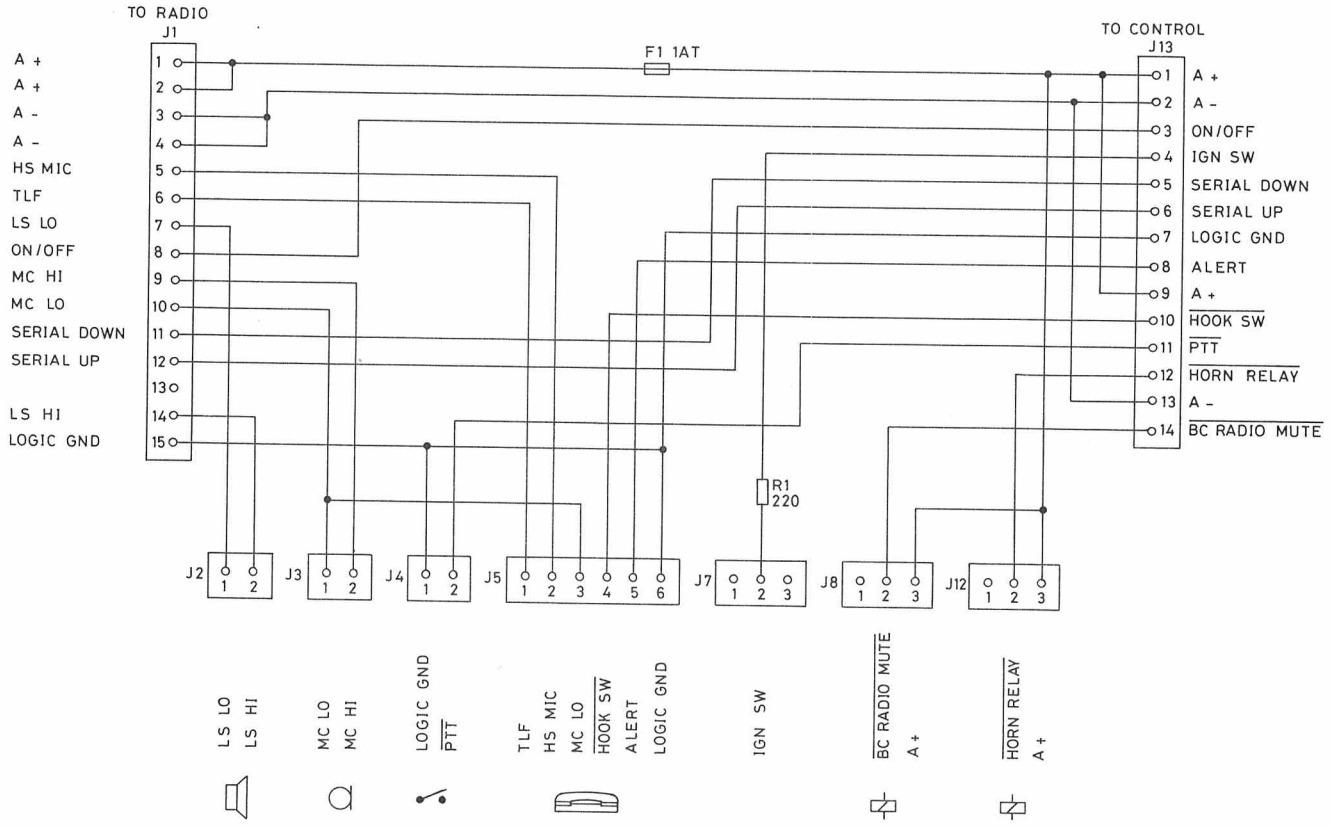

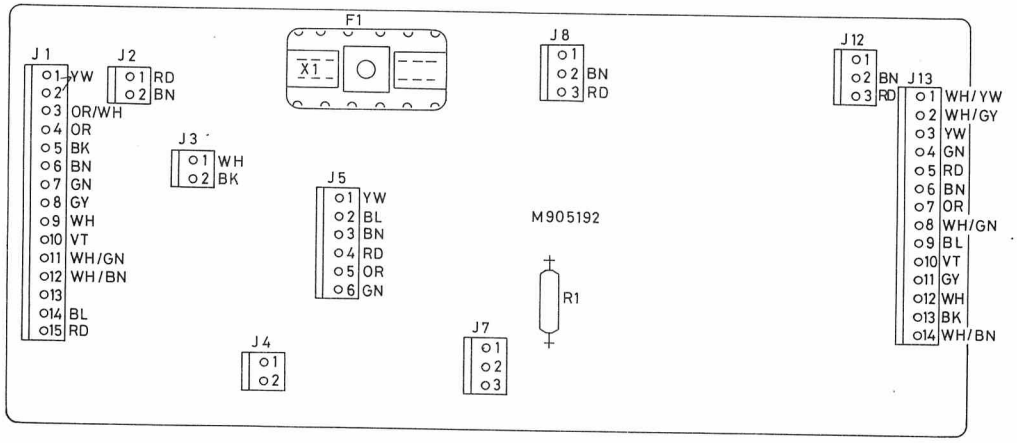

JUNCTION BOX C9JB04

REV. A

D403.083/3

Storno

LOUDSPEAKERS



LOUDSPEAKER C9LS01, C9LS03

C9LS01	5 W max., 8 ohm impedance
C9LS03	18 W max., 4 ohm impedance

The ball shaped loudspeaker enclosure consists of two halves that snap together. The base part has a flat side with holes for the mounting screws and is normally attached directly to the mounting surface. The loudspeaker part has a grill, ultrasonic welded to the enclosure, and holds the speaker. After installation this part can be rotated for adjustment of the sound direction.

Storno

MICROPHONES

FIXED MICROPHONE C9MC03

The microphone housing is made of plastic and consists of two parts snapped together. Inside is a directional microphone cartridge and an amplifier. A cable connects the unit to the junction box. The microphone housing may be attached directly to the mounting surface, or may be attached by means of a small bracket with rubber suspensions.

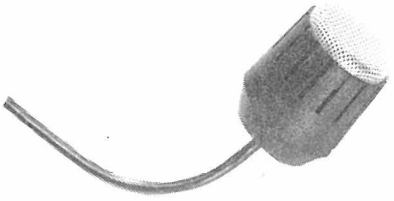

HANDSET MT903

The handset consists of a microtelephone and retainer. The microtelephone has a dynamic microphone with amplifier and a telephone cartridge. A PTT (Push-to-Talk) button is placed in the handle and a coiled cable connects to the retainer. The standard version of the retainer has two change-over switches, but can, optionally, be fitted with an extra switch.



HANDSET MT907

The handset consists of a microtelephone, earphone and a transmit button. The audio amplifier for microphone is also placed in the handset. Two microswitches, one for detection of on/off hook and one for switch between speaker and earphone are placed in the retainer. One extra microswitch can be placed in the retainer for optional use. Handset and retainer is connected through a coiled cord.
A dynamic microphone is used. The audio signal from the microphone is amplified in a two stage amplifier. The sound level from the earphone can be adjusted with a potentiometer in serie with the earphone. The hook switch informs the control logic in the radio, when the handset is in the retainer.



The alert tone loudspeaker with adjustable sound level is placed in MT907.

Storno

Storno

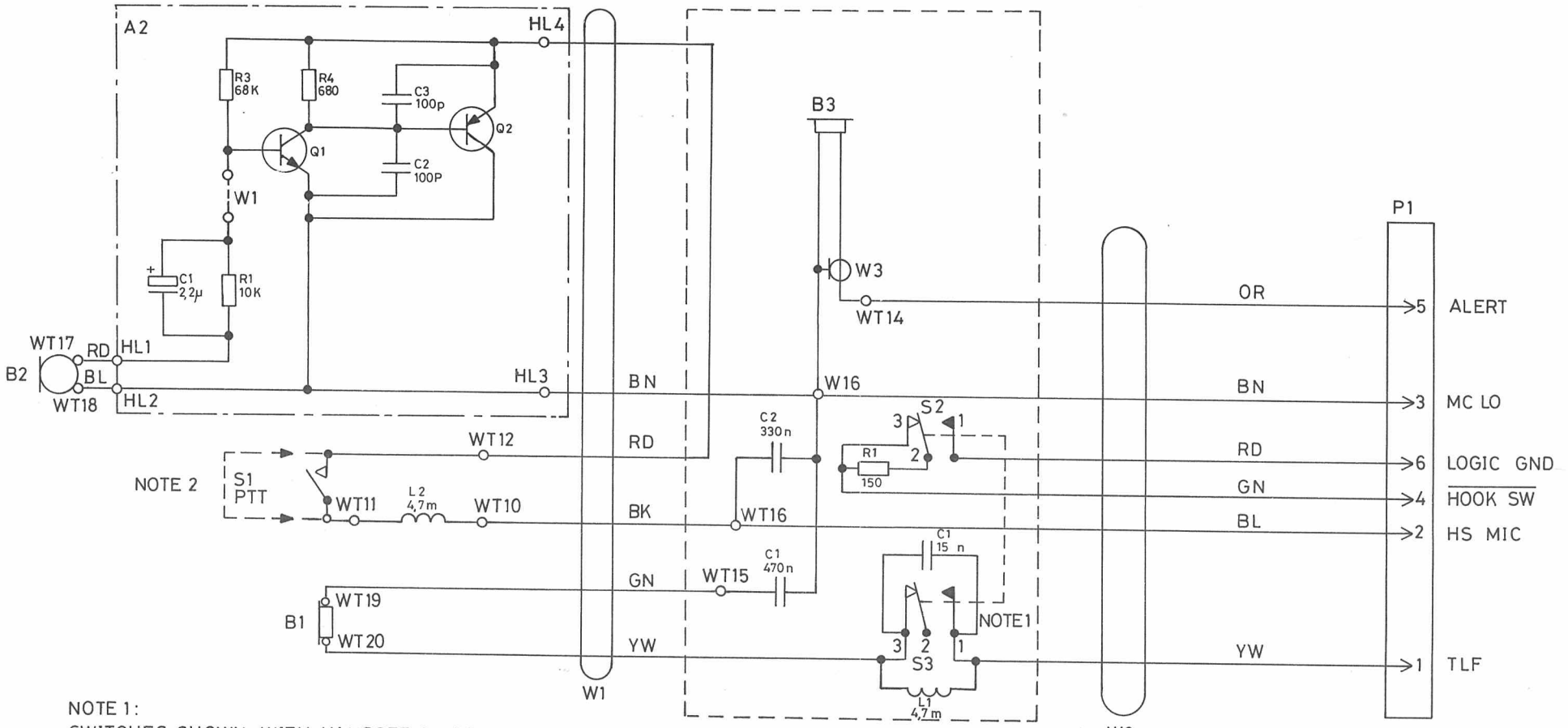

NOTE 1:
SWITCHES SHOWN WITH HANDSET IN RETAINER
NOTE 2:
G1 = NMT
G2 = PRT. S4 (REMOVE S1 AND SHORT WT11-WT12)

HANDHELD MICROPHONE C9MT03

19M905191 REV. C D403.082/3

ITEM NUMBER	DESCRIPTION
M905191G1	C9MT03, MICROTELEPHONE W. SWITCH
K805070G1	SUB ASM.: AF-AMP.,CPNT. BD.C9MT03/-01

P A R T S L I S T :

CIRCUIT POSITION	COMPONENT ITEM NUMBER	COMPONENT DESCRIPTION	QTY TOTAL
A01	K805070G1	ASM BD PW C9MT03/-01	SEE BELOW !
B01	J706194P1	MIC CTG	1
B02	J706194P1	MIC CTG	1
B03	J706594P1	EARPHONE	1
C01	A700004P6	CAP PYES 470 NF 63V	1
C02	A700004P5	CAP PYES O,33MF 63V	1
C03	A700005P8	CAP PYES 15N 10% 50V	1
L01	J707174P1	COIL RF FIX 4700UH 10%	1
L02	J707174P1	COIL RF FIX 4700UH 10%	1
R01	A700019P27	RES DEPC 150R 5% 1/4W	1
W01	J706182P1	SPIRAL WIRE	1
W02	K805167G1	ASM CA	1
W03	J706629G1	ASM CA MT903	1
002	J706073P1	NETTING	2
003	L855026P1	HOLDER	2
004	J706074P1	PLATE	1
005	J706195P1	HND SET SW	1
008	J706195P2	RET SW	1
009	A701268P2	WIRE RED	
010	A701268P6	WIRE BLUE	
011	A701863P5	CLAMPLOOP	1
014	A701268P2	WIRE RED	
019	J706075P1	GROMMET	1
020	K805023P1	GROMMET	1
021	J706313P1	TUBULAR RIVET	2
022	J706433P1	TAPE ACET WDH 12.7	
	J706202P2	NAME PLT	1

	K805070G1 :	AF-AMP, CPNT. BD. F. C9MT03/-01 :	
C01	B800650P21	CAP TA 2U2 20% 15V	1
C02	A700233P1	CAP CER 100P 10% 50V	1
C03	A700233P1	CAP CER 100P 10% 50V	1
Q01	A700017P1	TSTR NPN SI BC 548A/B	1
Q02	A700020P1	TSTR PNP SI BC 558A/B	1
R01	A700019P49	RES DEPC 10K 5% 1/4W	1
R03	A700019P57	RES DEPC 47K 5% 1/4W	1
R04	A700019P35	RES DEPC 680R 5% 1/4W	1
W01	A700184P1	WIRE JUMPER, (ZERO OHM)	1

Storno

Storno

J706 755 P1

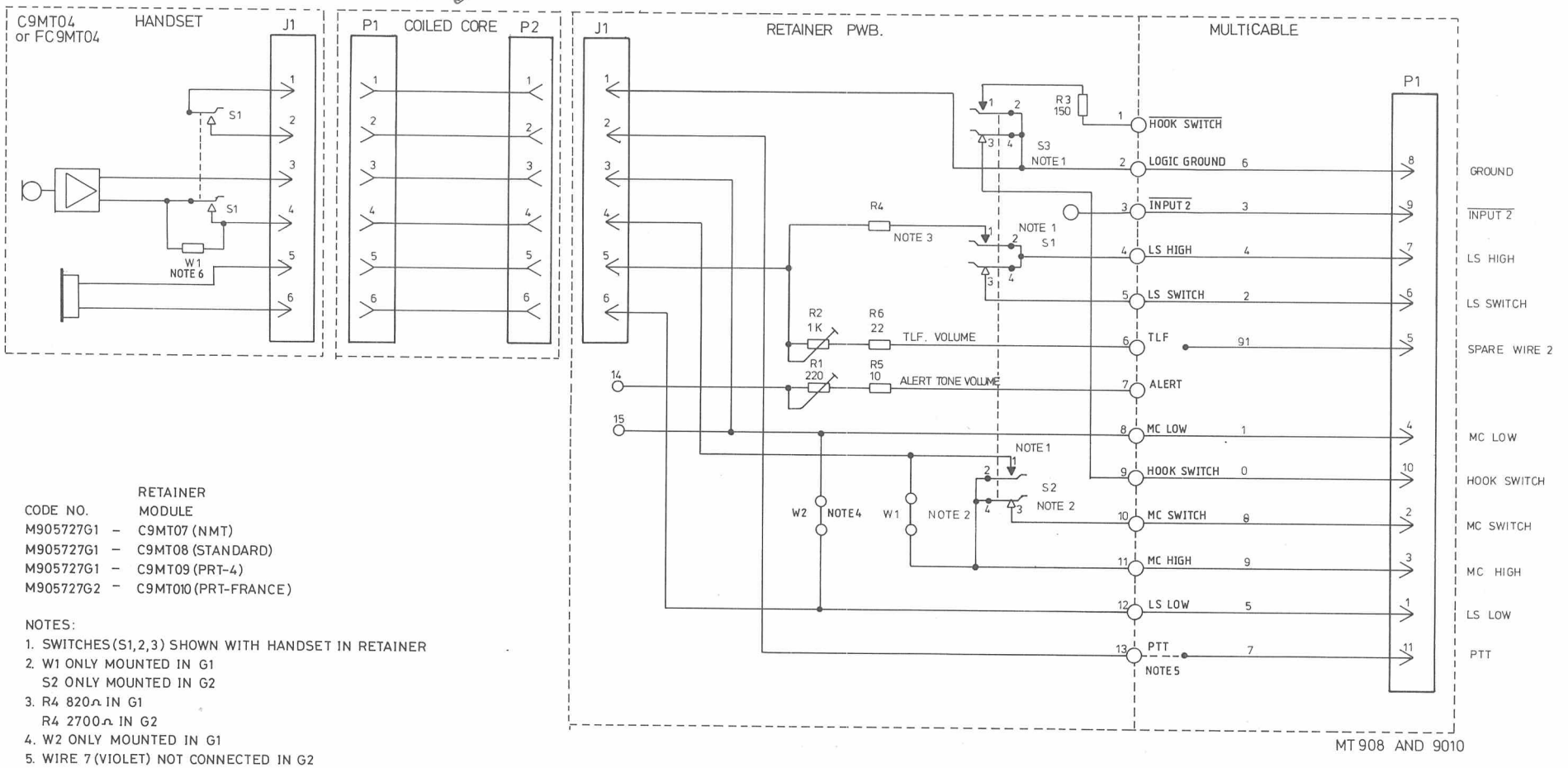

MT 908 AND 9010

CODE NO.	RETAINER MODULE
M905727G1 –	C9MT07 (NMT)
M905727G1 –	C9MT08 (STANDARD)
M905727G1 –	C9MT09 (PRT-4)
M905727G2 –	C9MT010 (PRT-FRANCE)

NOTES:

1. SWITCHES (S1,2,3) SHOWN WITH HANDSET IN RETAINER
2. W1 ONLY MOUNTED IN G1
   S2 ONLY MOUNTED IN G2
3. R4 820Ω IN G1
   R4 2700Ω IN G2
4. W2 ONLY MOUNTED IN G1
5. WIRE 7 (VIOLET) NOT CONNECTED IN G2
6. W1 ONLY MOUNTED IN C9MT010 (HANDSET FC9MT04)

CODE NO. L855524G1 - C9MT07 (NMT)
" – " G2 - C9MT08 (STANDARD)
" – " G3 - C9MT09 (PRT-4)
" – " G4 - C9MT010 (PRT-FRANCE)

MT907

HANDSET C9MT0XX

D403.668

Storno

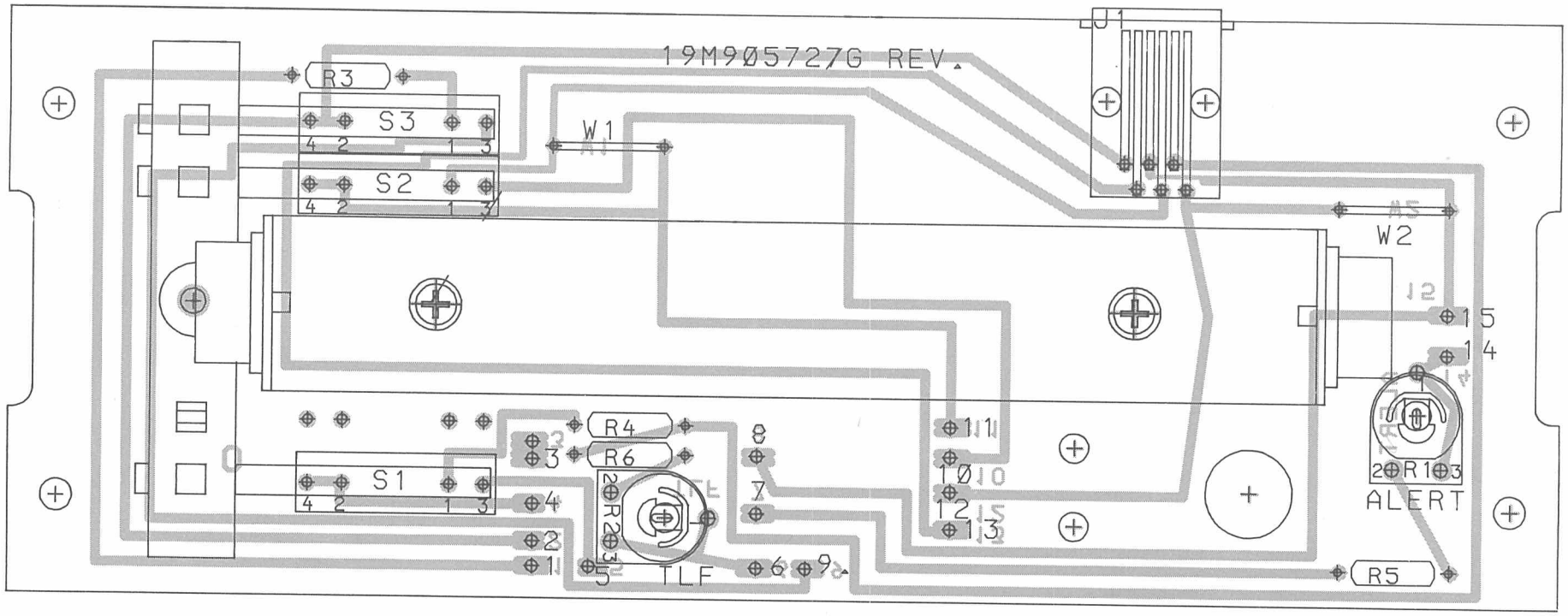

MT 907

HANDSET C9MT0XX
COMPONENT LAYOUT

D403.669

ITEM NUMBER	DESCRIPTION
L855524G1	MT 907 (NMT)
K805300G1	SUB ASM.: C9MT04
M905392G1	SUB SUB ASM.: AA907
M905727G1	SUB ASM.: RETAINER-CPNT BD PW

P A R T S L I S T :

CIRCUIT POSITION	COMPONENT ITEM NUMBER	COMPONENT DESCRIPTION	QUANTITY TOTAL
0003	M905727G1	CPNT BD PW , F. RETAINER - N O T E ! - FOR PARTS SEE BELOW:	1
0004	J708192G1	PLATE ASM	1
0006	K805167G1	ASM CA	1
0007	K805300G1	C9MT04 - N O T E ! - SEE BELOW FOR MODULES AND PARTS:	1
0008	J708240P1	NAMEPLATE MT907	1
0011	J706152P5	STRAP RET W BDL D19 NYL	1
0012	L855530G1	HSG ASM	1
0013	A700143P1	CATCH FRICTION	2
0014	J706212P302	SCREW	4
0015	J708297P1	LOUDSPEAKER 40 OHM	1
0016	J707713P1	NUT SPEED	3
0017	A700157P3	WIRE 0.220 SQ OR	
0018	J706163P1	NAME PLT	1
0019	J708205P1	NAMEPLATE	1
0020	J708204P1	COV PLT	1
0021	J708300P506	SCREW PAN HD 4.2 X 12 BZ	4
0003 :	M905727G1 :	CPNT BD PW , F. RETAINER :	
J001	J706197P1	CONNECTOR 6 CKT	1
R001	J706008P2	RES VAR CERM 220R 20%, 1/2W	1
R002	J706008P1	RES VAR CERM 1K 20%, 1/2W	1
R003	A700019P27	RES DEPC 150R 5%, 1/4W	1
R004	A700019P36	RES DEPC 820R 5%, 1/4W	1
R005	A700019P13	RES DEPC 10R 5%, 1/4W	1
R006	A700019P17	RES DEPC 22R 5%, 1/4W	1
S001	J708163P1	SWITCH	1
S003	J708163P1	SWITCH	1
W001	A700184P1	JUMPER, WIRE	1
W002	A700184P1	JUMPER, WIRE	1

CIRCUIT POSITION	COMPONENT ITEM NUMBER	COMPONENT DESCRIPTION	QUANTITY TOTAL
0006	K805484G1	SPRING ASM	1
0007	A700031P606	SCREW PAN HD M4 X 6 MM	2
0008	A700034P6	NUT M4	2
0009	J706076P6	WASHER, SPRING D 4.0 X 8.5MM	2
0010	J708156P1	SPLICE	1
0011	J708200G1	BUTTON ASM	1
0012	A701488P2	RING, RETAINING	1
0007 :	K805300G1 :	C9MT04 :	
A001	M905392G1	AA 907 - N O T E ! - FOR PARTS SEE BELOW:	1
B001	J707246G1	LS 905	1
W001	J706755P1	CA ASM MICROPHONE	1
0002	D900169P1	HNDSET TOP	1
0003	D900170P1	HNDSET BOT	1
0004	B800609P1	PB	1
0005	A701476P1	SPT BD	1
0006	J706212P203	SCR	3
0007	A701847P305	SCR THR FGRM	2
0008	A701485P1	WASH RUB	1
0009	J706212P202	SCR	2
A001 :	M905392G1 :	AA 907 :	
	L855296G1 :	SUB ASM.: CPNT BD PW :	
B001	J706041P1	MIKE EM60	1
A001 :	L855296G1 :	CPNT BD PW :	
C001	A700005P11	CAP POLY 47NF 10% , 50V	1
C002	A700235P17	CAP CER 22PF 5% , 50V	1
C003	A700234P1	CAP POLY 1NF 10% , 50V	1
C004	A700005P9	CAP PYES 22NF 10% , 50V	1
C005	A700233P1	CAP CER 100PF 10% , 50V	1
C006	A700004P5	CAP PYES 0,33MF 63V	1
C007	A700005P10	CAP PYES 33NF 10% , 63V	1
J001	J706197P1	JACK MODULAR , 6 CKT	1
J002	A700072P28	CONN MOLEX , 2 CKT	1
L001	J707174P1	COIL 4,7MH 10%	1
Q001	J706133P1	TSTR MPS-A13	1

CIRCUIT POSITION	COMPONENT ITEM NUMBER	COMPONENT DESCRIPTION	QUANTITY TOTAL
R001	A700019P60	RES DEPOS 82K OHM 0,25W	1
R002	A700019P66	RES DEPOS 270K OHM 0,25W	1
R003	A700019P47	RES DEPOS 6.8K 0.25W	1
S001	K805302G1	SW ADJ	1
0007	J706424P3	WASH	1

Storno

POWER SUPPLY UNIT

C9PS04



The C9PS04 is a mains operated power supply for the Stornophone 900 radiotelephone. The unit consists of a mains transformer, a rectifier, a smothing filter, a switching regulator, and an output filter. The unit will supply 13.6 V stabilized DC when connected to a 220 V/240 V AC outlet.

CIRCUIT DESCRIPTION

POWER TRANSFORMER

The power transformer is wound on a toroide core and has three windings, a 220/240 V primary and two 24 V secondary.
The 2 secondary windings are connected in parallel to the rectifier (D5) which gives the DC to the switching circuit.

SWITCHING REGULATOR

The switching circuit is built as a normal switching mode regulator with constant switching frequency, approximately 32 kHz, and variable duty cycle. The actual switching function is performed by the transistor configuration Q2, Q3, Q4 and the fly-back diode D4, which clamps the input of L-C filter L2-C8 to ground potential in that portion of the cycle where the switching transistors are off and D4 is forced to conduct by the energy from the collapsing field of L2.

The output voltage across C8 is sensed by IC1a and compared to the reference voltage across D2-D3. The resulting signal is amplified by IC1b which is driving Q2 and in turn Q3 and Q4.

Output current limiting is achieved by monitoring the voltage drop across R17 and feed this voltage to IC1d. The IC1d output is 'OR-ed' with the voltage control signal at the IC1a output and therefore overrides the control voltage when the output current goes excessively high.

The two filters, C2-L1-C3, and C8-L3-C9, are ripple-transient filters on the input and output and their function is to ensure that the inherent switching noise does not exceed acceptable limits on the input and output terminals, and the cables as well.

STRAPPING BOARD

The strapping board contains the output connector and is assembled to the cabinet and a printed board with soldered and riveted terminals:

-3 terminals connecting the mains transformer primary windings and the mains connection.
-1 terminal connecting the screen for the mains transformer.
-1 terminal connecting the mains transformer screen to cabinet.
-2 terminals connecting the output from the switching circuit to the output connector assembled to the cabinet.

TECHNICAL SPECIFICATIONS

Mains Voltage
220/240 V AC +12/-12%; 50-60 Hz

Power Consumption
Approx. 15 mA, 0 Amp load
Approx. 500 mA, 7 Amp load

Output Voltage
13,6 V DC ±2,0 V

Output Current
Maximum 7 A (short circuit protected)

Output Voltage Ripple
Less than 100 mV pp (peak to peak)

Switching Frequency
Approx. 32 kHz

Temperature Range
$-25^{o}C$ to $+55^{o}C$

Dimensions
L = 240 mm, W = 185 mm, H = 85 mm

Weight
4,5 kg

Storno

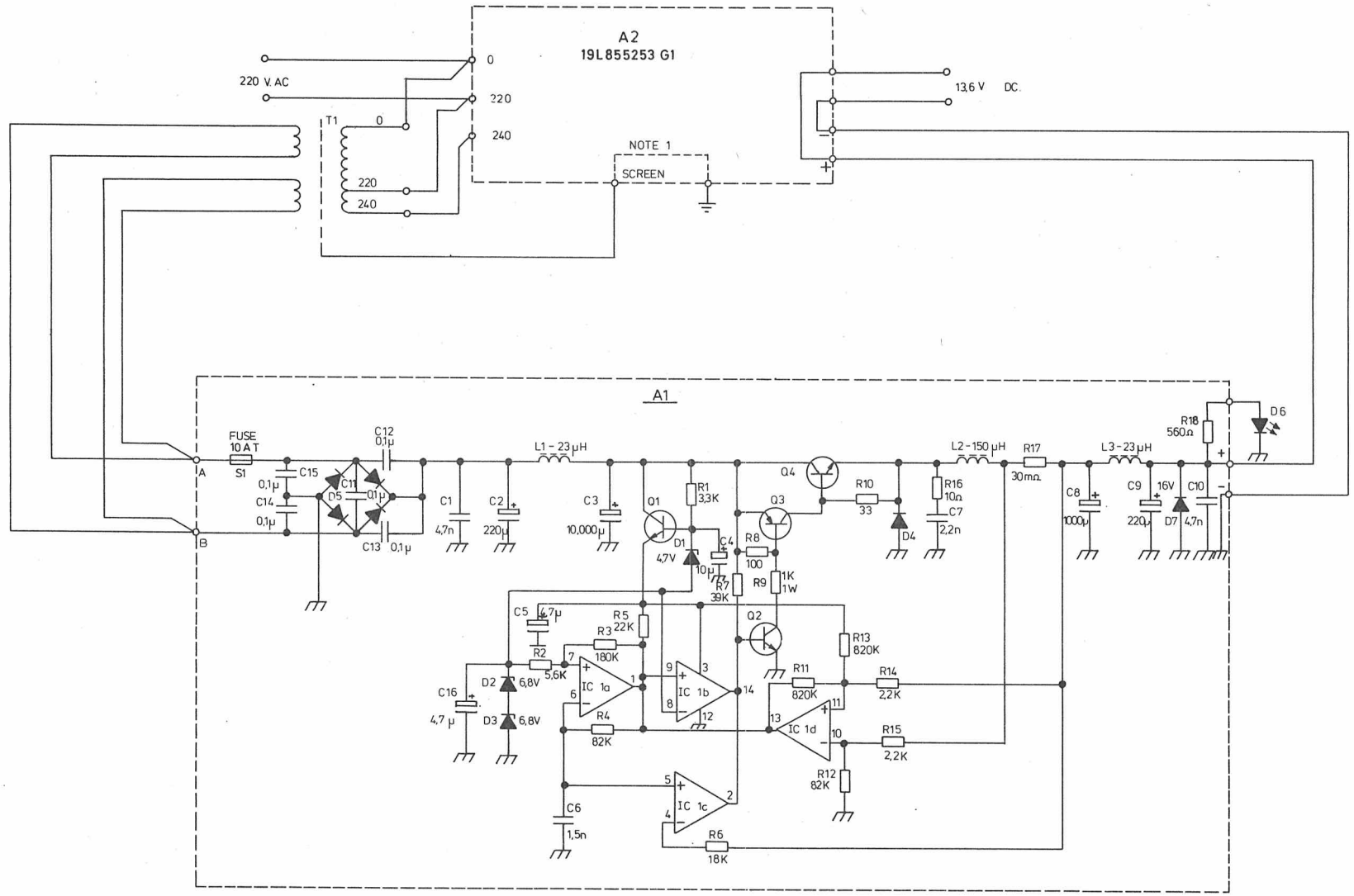

NOTE 1.
CONNECTION IN G2 ONLY.

MOUNTED BOARD
CODE NO.
A1 19M905312 G1
A1 19M905312 G2

POWER SUPPLY C9PS04

D403.261

Storno

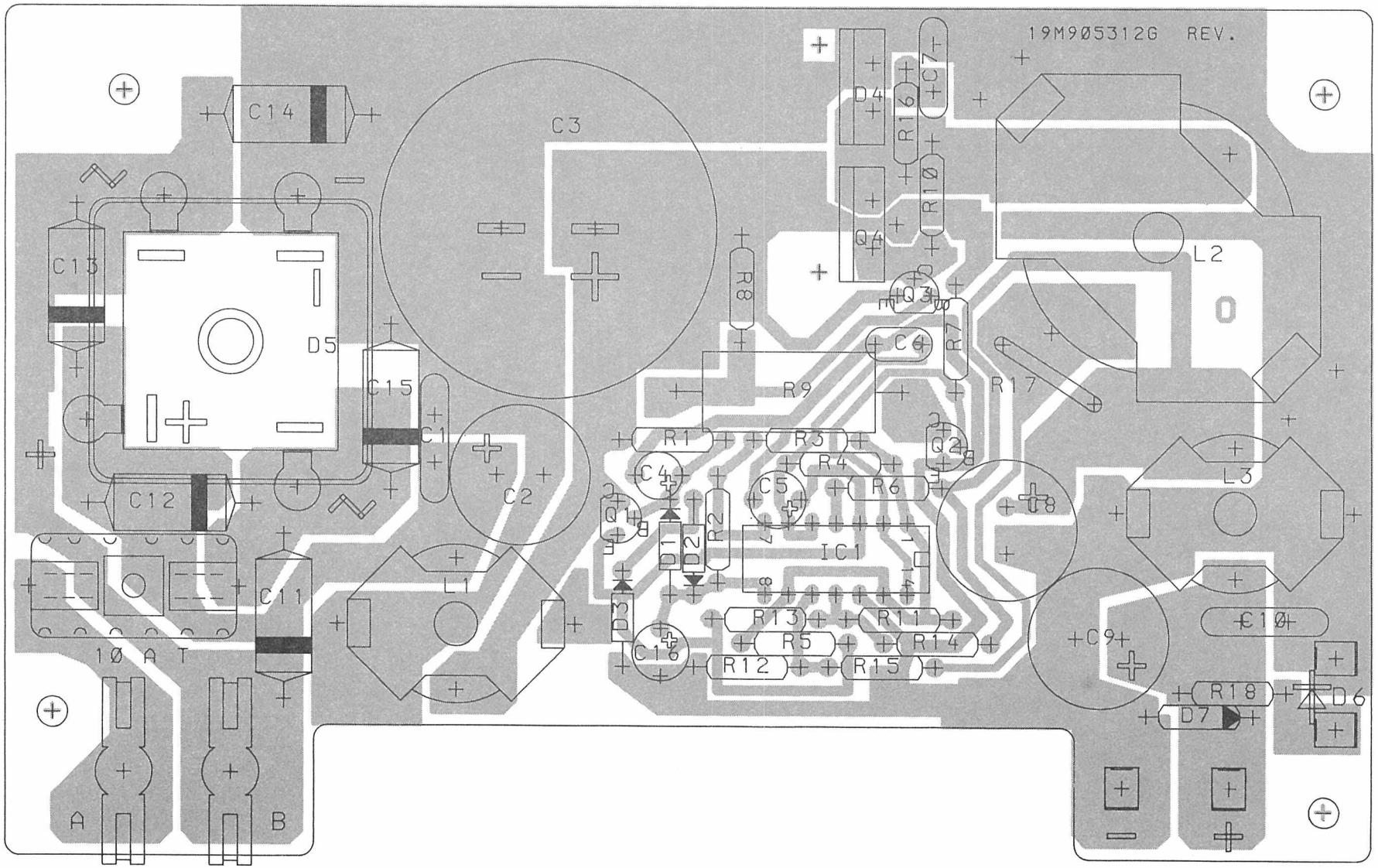

POWER SUPPLY C9PS04
COMPONENT LAYOUT

D403.262

ITEM NUMBER	DESCRIPTION
M905344G1	C9PS04
M905312G1	A1 : SUB ASM., CPNT BD PW PS 904
L855253G1	A2 : SUB ASM., CPNT BD PW

P A R T S L I S T :

	CIRCUIT POSITION	COMPONENT ITEM NUMBER	COMPONENT DESCRIPTION	QUANTITY TOTAL
	A1	M905312G1	ASM BD PW PS 904	1
*	A2	L855253G1	ASM BD PW	1
	D6	J706136P2	DIO OPTO	1
	T1	J706961P1	TRANSFORMER MAINS 270VA	1
	002	L855258G1	CHASSIS ASM	1
	003	J707114G1	CA PWR	1
	004	J707114G2	CA PWR	1
	006	L855270P1	COVER	1
*	007	J707001G1	KIT	1
	008	K805244G1	HT SK	1
	009	J706982P1	WASHER	2
	010	J706961P2	MTG DISC J706961P1	1
	011	J706992P1	SPACER	4
	013	J706999P1	INS PLT	1
	015	J706921P1	RETAINER	1
	016	J707000P1	NP	1
	017	J706961P3	MTG WASHER, RUBB.	2
	018	K805023P1	GROMMET	1
	019	J706968P1	CABLE ASSY POWER 2-COND	1
	021	J706902P1	CLAMP, CA	1
	022	J706902P2	CLAMP, CA	1

	ITEM NUMBER	DESCRIPTION	
A01 :	M905312G1 :	ASM BD PW., PS 904 :	
C01	A700001P11	CAP CER 4,7NF 50V	1
C02	J706005P14	CAP ELEC 220U 40V	1
C03	J706957P2	CAP ELECT 10.000MF 40V	1
C04	A701534P4	CAP TA SOL 1U 20% 35V	1
C05	A701534P6	CAP TA SOL 4U7 20% 35V	1
C06	A700234P2	CAP PYES 1N5 10% 50V	1
C07	A700233P9	CAP CER 2N2 10% 50V	1
C08	J706005P7	CAP ELEC 1000U 16V	1
C09	J706005P10	CAP ELEC 220U 25V	1
C10	A700001P11	CAP CER 4,7NF 50V	1

CIRCUIT POSITION	COMPONENT ITEM NUMBER	COMPONENT DESCRIPTION	QUANTITY TOTAL
C11	J706959P1	CAP PYES 0.1UF 100V	1
C12	J706959P1	CAP PYES 0.1UF 100V	1
C13	J706959P1	CAP PYES 0.1UF 100V	1
C14	J706959P1	CAP PYES 0.1UF 100V	1
C15	J706959P1	CAP PYES 0.1UF 100V	1
C16	A701534P6	CAP TA SOL 4U7 20% 35V	1
D1	A700025P5	DIO SI ZENR 4V7 5% 0,4W	1
D2	A700025P8	DIO SI ZENR 6V8 5% 0,4W	1
D3	A700025P8	DIO SI ZENR 6V8 5% 0,4W	1
D4	J706023P1	DIO SI PWR BYW 29-50	1
D5	J707044P1	DIO	1
D7	J706030P4	DIO SI ZENR 16V 5% 1W	1
L1	K805252G1	ASM COIL, 23 UH	1
L2	K805253G1	ASM COIL, 150 UH	1
L3	K805252G1	ASM COIL, 23 UH	1
Q1	A700017P1	TSTR NPN SI BC 548A/B	1
Q2	A700017P1	TSTR NPN SI BC 548A/B	1
Q3	A700026P1	TSTR PNP SI BC 369	1
Q4	J706015P1	TSTR NPN SI D44H8	1
R01	A700019P43	RES DEPC 3K3 5% 1/4W	1
R02	A700019P46	RES DEPC 5K6 5% 1/4W	1
R03	A700019P64	RES DEPC 180K 5% 1/4W	1
R04	A700019P60	RES DEPC 82K 5% 1/4W	1
R05	A700019P53	RES DEPC 22K 5% 1/4W	1
R06	A700019P52	RES DEPC 18K 5% 1/4W	1
R07	A700019P56	RES DEPC 39K 5% 1/4W	1
R08	A700019P25	RES DEPC 100R 5% 1/4W	1
R09	J706251P37	RES DEPC 1K0 5% 1/1W	1
R10	A700019P19	RES DEPC 33R 5% 1/4W	1
R11	A700019P72	RES DEPC 820K 5% 1/4W	1
R12	A700019P60	RES DEPC 82K 5% 1/4W	1
R13	A700019P72	RES DEPC 820K 5% 1/4W	1
R14	A700019P41	RES DEPC 2K2 5% 1/4W	1
R15	A700019P41	RES DEPC 2K2 5% 1/4W	1
R16	A700019P13	RES DEPC 10R 5% 1/4W	1
R17	J706891P1	RES CONST 0.030 OHM	1
R18	A700019P34	RES DEPC 560R 5% 1/4W	1
S1	J706998P13	FUSE CTG 10.0A	1
U1	J706018P1	IC LIN CMPAR 3302	1
008	J706903P1	FZ HLR	1
009	J706904P1	TERM SLD RLN 2689002	2
010	J706973P1	TERM,SLD 2.3 SQ HOLE	4
011	J706977P1	TERM SLD D 5 BEND	4
012	A700068P1	INS BUSH	2
013	A700115P3	INSULATOR PLATE	2
014	K805245P1	HOLDER	1

CIRCUIT POSITION	COMPONENT ITEM NUMBER	COMPONENT DESCRIPTION	QUANTITY TOTAL
		MECHANICAL PARTS:	
	A700031P305	SCREW PAN HD M 2.5X5.0	2
	A700031P310	SCREW PAN HD M 2.5X10.0	2
	A700031P406	SCREW PAN HD M 3.0X6.0	0
	A700031P413	SCREW PAN HD M 3.0X13.0	2
	A700032P5	WASHER LOK TOH D 3.0	3
	A700033P7	WASHER LOK TOH D 4.0	1
	A700034P6	NUT	1
	A700034P7	NUT	1
	A700036P406	SCREW PAN HD M 3.0X6.0	0
	A701502P1	BMPR	4
	A701847P205	SCREW THR FORM	2
	J706076P5	WASHER SPG 3.0X6.4	4

Storno

C9SU02

SWITCHING UNIT

C9SU02 is a switching unit containing a relay with one change-over switch. C9SU02 can be used either as horn alarm or broadcast radio mute. The unit is supplied with a cable for connection to the junction box.

SPECIFICATIONS

INTERFACE

The connection between C9SU02 and the junction box is provided with a 2-wired cable.

Connector P1	Function
Pin 1	N.C.
Pin 2 +(J8)	mute out
Pin 2 +(J12)	out 1
Pin 3 +(J8/J12)	A+

+ J8 and J12 in the junction box

J3, J4	Horn alarm
J4, J5	Broadcast radio mute

PERFORMANCE

A+
nom. 13.6 (10.5 - 16V)

Out 1/mute out
High: Vmax. ≤ A+
Low: < 1.2V, Imax. 50 mA.

Change-over switch
Imax. 15A < 4 sec.
I cont. 8A

Temperature range
-40° to 70° C

Mechanical dimensions
Heigth x diameter: 60 x 40 Ø mm
Length of cable: 5 mm

Storno

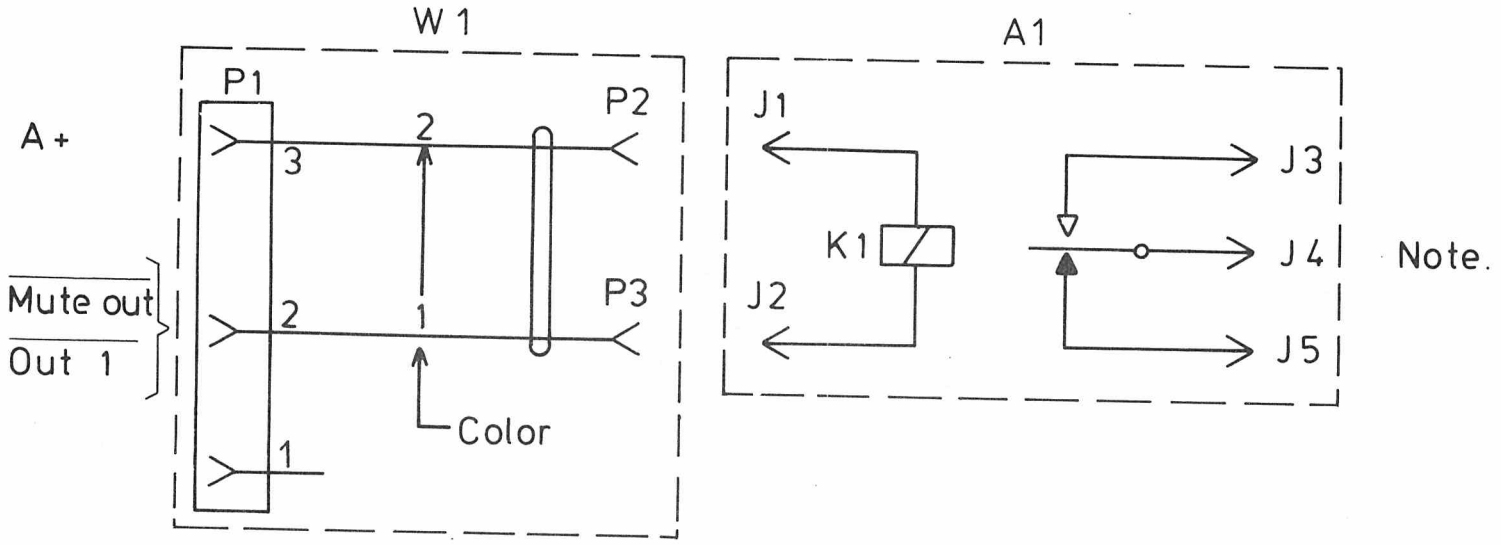

NOTE: Horn alarm, J3 - J4.

Disconnecting broadcast radio, J4 - J5.

Storno

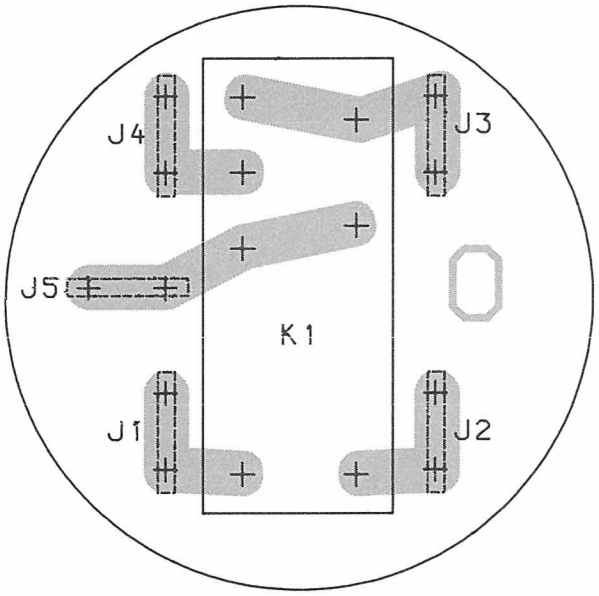

SWITCHING UNIT C9SU02

COMPONENT LAYOUT

CODE NO. K805205G1

D403. 734

CHAPTER
CHAPITRE
KAPITEL

7

Storno

ADJUSTMENT PROCEDURE

STORNOMATIC 900

This adjustment procedure covers a UHF Stornomatic 900 radio for the NMT system operating in the 450 MHz frequency band. The procedure comprises the following:

Service mode operation
Test setup, RX-TX
Measuring instruments
Cables, connectors
Adjustment tools
Central metering connectors, CM
Voltage regulator check
Receiver adjustments
Transmitter adjustments

SERVICE MODE OPERATION

During all tests and alignment procedures it is necessary to use a controlhead with a special test-program. When turned on the radio will enter NMT mode.
To enter service mode pres . thereby the automatic NMT program is disabled and the radio can be completely controlled from the controlhead.
Default values in Service mode are:

Frequency channel 091
Handfree mode, LS/MIC on
FFSK modelation off
Volume control level 2
TX high level selected

Service mode control procedures are as follows:

FREQUENCY SETTING

Press channel number (always 3 digits) followed by .

TRANSMITTER

Press a number key followed by .

0 15 W power
1 Reduction 10 dB
2 Reduction 20 dB

Activate PTT to key the transmitter.
Note: It is only possible to key the transmitter in 30 sec. due to the autonom timer, to overrule the timer it is necessary to have carrier on the receiver.

FFSK MODULATOR

Press a number key followed by

0 FFSK modulator off
1 FFSK modulator on

VOLUME CONTROL

Press for level up
Press for level down

AUDIO CONTROLS

Press a number key followed by

0 mute all
1 handfree mode
2 handset mode

LOUDSPEAKER/MIC CONTROLS

Press a number key followed by

0 loudspeaker off/fixed mic on
1 loudspeaker on/fixed mic off

PILOT TONE CONTROL

Press a number key followed by

0 4 kHz pilot tone off
1 4 kHz pilot tone on

INDICATORS

In Service mode the indicators show the status in the radio/control logic.

RX data	-1550 Hz	
Carrier detector,	10 dB/uV	(3.2 uV)
Transmitter activ	(FLASHING)	
Fast squelch,	-2 dB/uV	(0.8 uV)
Carrier detector	20 dB/uV	(10 uV)
Data detector	800 Hz-	

DIGIT SELECT	FUNCTION SELECT	DESCRIPTION
		SERVICE MODE
MOBILE TLF. N°		MOB. TLF. N° IS WRITTEN INTO RAM
MOBILE TLF. N°		MOB. TLF. N° IS PROGRAMMED INTO PROM (SERVICE MODE)
001 - 180		CHANNEL SELECT
0 1 2		TX POWER SELECT 15 W TX POWER SELECT 1.5 W TX POWER SELECT 0.15 W
0 1		FFSK MODULATOR ON FFSK MODULATOR OFF
		LS VOLUME UP LS VOLUME DOWN
0 1 2		MUTE ALL HANDSFREE HANDSET
0 1		LS OFF/FIXED MIC. ON LS ON/FIXED MIC. OFF
0 1		4 kHz PILOT OFF 4 kHz PILOT ON

MEASURING INSTRUMENTS

RF signal generator	10-512 MHz
Multimeter	Ri= 20 Kohm/V
AC Voltmeter	Zi= >20 Kohm/V
Distortion meter with psophometric filter	
Deviation meter	406-512 MHz
Frequency counter	10-512 MHz
AF signal generator	0-5 kHz
RF Power meter	0-25 W
DC Power supply	10-20 V/10 A
	Current limiter
	Adjustable 0.1-10 A
DC Amperemeter	0-0.1 A
DC Ampere meter	0-10 A
AF Dummy load	8 ohm/5 W (4 ohm/10 W)
Signal Sampler	95.2001-00

Control head with test program
Junction box
Cable kit

Central metering box

ADJUSTMENT TOOLS

Adjustment kitl	Code. no. J707383G1
Phono plug	Code. no. A700171P1
BNC-plug	Code. no. 41.0145-00
RG196/U Cable	Code. no. 175. 5021-00

CENTRAL METERING CONNECTORS

RX JP909-J8 Function	Connect meter to - +
1. A-	
2. A-	
3. Discriminator	1 - 3
4. IF amplifier	1 - 4
5. RX mixer	1 - 5
6. RX PLL tune	1 - 6
7. RX lock detector	1 - 7
8. RX filter	1 - 8
9. RX tripler	1 - 9
10. RX oscillator	1 - 10

TX JP909-J7 Function	Connect meter to - +
1. A-	
2. A-	
3. FS VCO tune V	1 - 3
4. FS oscillator CM	1 - 4
5. TX level	1 - 5
6. TX PLL tune	1 - 6
7. TX status	1 - 7
8. TX filter	1 - 8
9. TX tripler	1 - 9
10. TX oscillator	1 - 10

PA9613/14-J4 Function	Connect meter to - +
1. A-	
2. A+	1 - 2
3. Not used	
4. Final current	4 - 2
5. Drive current	5 - 2
6. Not used	
7. Ground	
8. Power control	1 - 8
9. Forward power	1 - 9
10. Input drive	1 - 10

SYSTEM JP909-J6 Function	Connect meter to - +
1. A-	
2. A+	1 - 2
3. +9 V	1 - 3
4. +5 V	1 - 4
5. Not used	
6. Not used	
7. Not used	
8. Not used	
9. Not used	
10. Not used	

When the microcomputer executes the service mode program the entire function of the control head is changed and the functions of the keys and the indicators are quite different to normal. When the microcomputer accepts a service mode command the response is that the digits on the display disappear.

Specified voltage readings are measured with a 20 Kohm/V meter and for reference only; readings may vary for different sets.

The correct type of control head and accessories must necessarily be used to control the radio during the alignment and test procedures. Refer to test setup.

When using the central metering (CM) it is convenient to use a 20 Kohm/V meter and a central metering test box for testing.

ADJUSTMENT AND CHECKING

POLARITY AND OVERVOLTAGE CHECK

Set the power supply voltage to 13.6 V (V_{BATT}).
Set the current limiter to 0.1 A.
Connect the power supply with reverse polarity to the equipment.
Measure the voltage across the power leads with a voltmeter. The meter should read less than 1.5 V.
Connect the power supply with correct polarity to the equipment and set the current limiter to 3 A.

CHECKING THE INTERNAL VOLTAGES

Connect a voltmeter to pin 4 (J6) on JP909.
The meter should read 5 V ±0.2 V.
Connect a voltmeter to pin 3 (J6) on JP909.
The meter should read 9 V ±0.04 V.

NB. These measurements are not accurate enough for adjusting the voltage to be within the 0.5 % tolerance. To do that it's necessary to use a digital voltmeter and adjust the voltages by means of R5 on VR901.

FREQUENCY SYNTHESIZER ADJUSTMENT

Put the RX/TX plug in the TX connector and connect a voltmeter to 1-3.

Select channel 128.

Adjust the trimmer of L1 (FS9011) for 1.80 V ± 10 mV.
Connect the voltmeter to P2 pin 9 (TX enable)
Check for proper synthesizer locking which exist when the voltage is at least 8 V.

Connect a frequency counter to the FS9011 output J1.

Select channel 001.
Measure the frequency.
Requirement: 12.800000 MHz ± 10 Hz.
Select channel 180.
Measure the frequency.
Requirement: 17.275000 MHz ± 10 Hz

If the frequency is not within tolerance adjust C5 on FS9011 until it is.

RECEIVER ALIGNMENT

RECEIVER INJECTION SIGNAL ADJUSTMENT
PL961

Put the RX/TX plug on the test box in the RX CM connector and connect a voltmeter to 1 and 10.

a) Tune L3 (PWR XO905) and L12 (PL961) for maximum voltmeter reading (1.5 V)

b) Connect the voltmeter to 1 and 9.
Adjust L12 (PL961) for maximum voltmeter reading.
Readjust L3 (PWR XO905), L12 and L13 (PL961) for maximum voltmeter reading.
The voltage shall be approximately 0.9 V (0.7 - 1.0 V).

c) Connect the voltmeter to 1 and 8.
Detune outwards L14 and L15 (PL961) as much as possible.
Adjust L14 for maximum voltmeter reading and after this adjust L15 slowly for minimum voltage (0.9 V).

CAUTION
The maximum of L14 and the minimum of L15 shall be well defined and easy to find.
Do not readjust L14 to find the minimum of L15.

d) Use two voltmeters M1 and M2.
Select channel 090: 465.225 MHz
Connect voltmeter M1 to 1 and 7.
Adjust C1 (PL961) slowly until voltmeter M1 reading goes high, approx. 0,85 V.
The PLL is in lock.

e) Connect voltmeter M2 to 1 and 6.
To adjust C1 with PLL in lock, measure the highest and lowest RX PLL tune voltage.

$$V_{RX}\ \text{PLL tune} = \frac{V_{high} + V_{low}}{2}$$

Adjust C1 until the calculated RX PLL tune voltage is read on voltmeter M2.

f) Connect the voltmeter to 1 and 5.
Adjust C9, C8 and C2 (RC963) for maximum voltmeter reading, approximately 0.4 V.

INJECTION FREQUENCY ADJUSTMENT
PL961

Before adjusting the injection frequency the synthesizer frequency should be checked.
Connect a frequency counter to the FS9011 output, J1/P2.
The synthesizer output level is 0 dBM and the frequency should be:
12.800000 MHz on channel 001
17.275000 MHz on channel 180
Refer to Frequency Synthesizer Adjustment.

Connect FS9011 to PL961, J2.

Connect the frequency counter to the PL961 output, J2/P1.
The PL961 output frequency should be:
441.600000 MHz on channel 001.
The frequency is adjusted with L2 (FREQ-XO905).

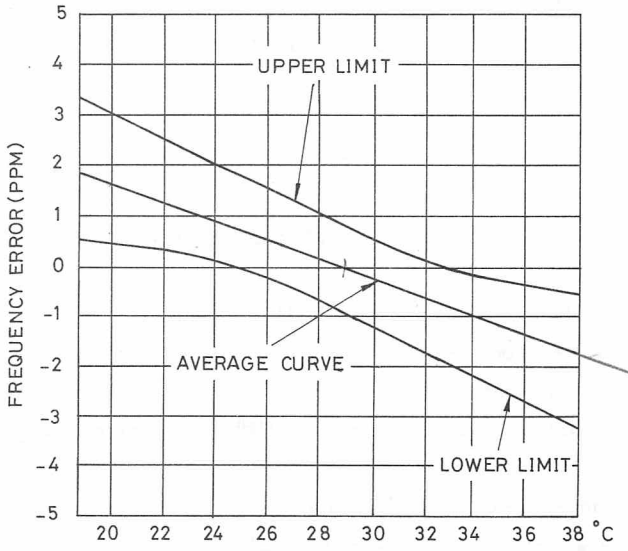

XO900 FREQUENCY ERROR CURVE
D403.172

FINAL FREQUENCY ADJUSTMENT XO905

Because of power supply and load variations the oscillator must be adjusted to the correct frequency after being installed. The graph shows the frequency error in setting the frequency as the ambient temperature varies about the reference, approx 28.6°C.

All oscillators fall within the upper and lower limit but since each oscillator's characteristic is unknown the average curve should be used.
The metal can must be in place when adjusting.

Example:
The frequency is adjusted at 23°C (equipment's temperature).
Adjust the oscillator for f_{nom} +1 ppm=
441.6000 MHz + 441 Hz= 441.600441 MHz

RECEIVER FRONT-END
RC963

The receiver front-end factory adjusted to the NMT specifications and need not be readjusted.

WARNING
Any attempt to readjust the front-end will result in maladjustment and the module must be taken out and returned to the factory for adjustment of the bandpass filter characteristic and its dependance on temperature be checked to be within tolerance.

DUPLEX FILTER ALIGNMENT

The duplex filter BF964 is factory adjusted to the NMT frequency band and need not readjustment.

IF AMPLIFIER ADJUSTMENT

For coarse adjustment see separate procedure.
Select channel 001.

Connect a signal generator to the antenna connector.
Set the signal generator output to 1 mVEMF.
Modulate the signal generator with 1 kHz to ±3 kHz frequency deviation.
Connect the voltmeter to 1 and 4.
Adjust L1, L2 and L3 in IA907 for maximum voltmeter reading.
Connect a distortion meter and psophometricfilter to central metering (CM) pin 3 (hot) and pin 1 (ground).

Adjust L3 and L4 in IA907 and L2 in RC963 for minimum distortion. Repeat the adjustments until no further improvement is possible.
Read the distortion.
Requirement: less than 3%.

AUDIO SIGNAL ADJUSTMENT

Connect an 8-ohm/5 W load between LS HI-LS LO.

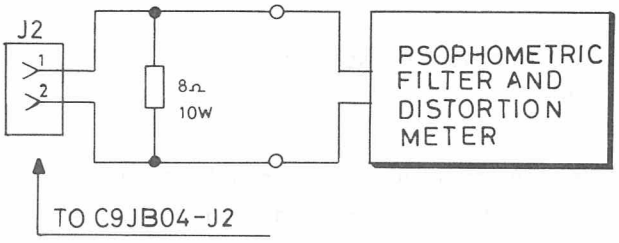

Connect an AF voltmeter across the load.

Set the RF level from the signal generator to 1 mV EMF on the signal frequency. The signal shall be modulated with 1 kHz and the deviation set to ±3.0 kHz.

The squelch control shall be unactivated and the LS function activated.
Refer to Service Mode Operation.

Set the volume on the controlbox to level 7.
With potentiometer R11 (R_{VOLUME}) adjust the output level for 5 W in a 8-ohm load corresponding to 6.3 V RMS across the load.

Note: LS LO must not be connected to radio ground.

RECEIVER SENSITIVITY CHECK

Select channel 90. (465.225 MHz)
Set the signal generator to f_{ant} and 1 mV EMF.
Connect a distortion meter with psophometricfilter across the 8-ohm AF load.
Set the volume to level 6.
Reduce the signal generator output to obtain 20 dB SINAD.
Requirement: 20 dB psophometric SINAD (CEPT) for $V_{input} \leq 1$ uV EMF.

Measure the sensitivity on channel 01 and 180. Compared with the measurement on channel 90 the sensitivity degradation shall be less than 1 dB.

SQUELCH ADJUSTMENT

Connect the signal generator to the antenna connector.
Set the generator output to 0.8 uV EMF.
Set the modulation to 1 kHz and ±3 kHz frequency deviation.
Select the squelched mode, refer to service mode operation.
Adjust R10 (Rsq-AA9017) until the roaming indicator on the control head flashes with a duty cycle of approximately 50%.
Check the squelch hysteresis by increasing and decreasing the signal generator output.

The indicator shall be constantly on at 1 uV EMF imput and constantly off at 0.6 uV EMF.

3.2 uV and 10 uV DETECTOR ADJUSTMENT

Connect the signal generator to the antenna connector.
Set the generator output to 10 uV EMF.
Set the modulation to 1 kHz and ±3 kHz frequency deviation.
Adjust R66 (CL908) until the indicator on the control head just turns on.
Check the detector hysteresis.
indicator off for 9.0 uV EMF input.
indicator on for 11.0 uV EMF input.

If the cetector hysteresis is not within tolerance repeat the adjustment R66 (CL908).

Set the generator output to 3.2 uV EMF.
Adjust R80 (CL908) the P indicator on the control head turns on.
Check the detector hysteresis.
P indicator off for 2.8 uV EMF input.
indicator on for 3.6 uV EMF input.

If the detector hysteresis is not within tolerance repeat the adjustment R80 (CL908).

TELEPHONE LEVEL ADJUSTMENT

Connect the signal generator to the antenna connector.
Set the generator output to 1 mV EMF.
Set the generator modulation to 1 kHz and ±3 kHz frequency deviation.
Press [2] [μ] on the control head.
Connect a telephone dummy network to J5 in C9JB05.

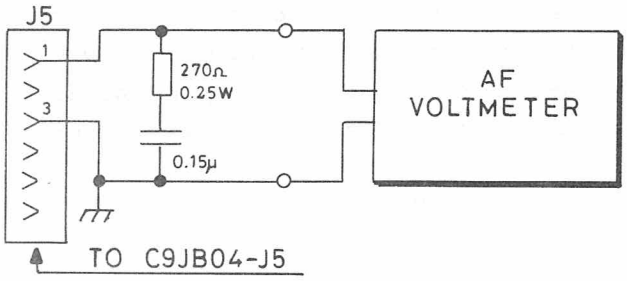

Connect an AF voltmeter across the dummy network.
Adjust R26 (FN907) for 0.4 V on the AF voltmeter.

4 kHz NOTCH FILTER CHECK

Change the generator modulation to 4 kHz ±10 Hz.
Check that the output falls at least 30 dB.

DATA MODEM CHECK

Connect the signal generator to the antenna connector.
Select channel 90. (465.225 MHz).
Set the signal generator to the receiver frequency and the output to 1 mV EMF.
Modulate the signal generator with 1 kHz and ±3 kHz frequency deviation.
Tune the modulation frequency from 100 Hz and upwards and watch the control head indicators.
At approximately 800 Hz the "data squelch" goes high and the [I→] indicator goes ON. The hysteresis is approximately 100 Hz.
At approximately 1550 Hz the RX data indicator on the control head [Y] turns off without hysteresis.

MEASURING THE RECEIVER CURRENT DRAIN

Measure receiver current drain at V_{BAT} = 13.6 V

Off condition:	less than 75 mA
Standby:	less than 1.0 A
Receive 5 W AF:	less than 2.4 A

TRANSMITTER ALIGNMENT

Connect a UHF power meter, 25 W, to the antenna connector.
Set the power supply voltage to 13.6 V.
Set the current limiter to 10 A.
Select channel 90. (465.225 MHz)
Key the transmitter when adjusting.

Note: Before keying, set R9 in PA9613 to minimum (counter clockwise).

EXCITER ALIGNMENT

Put the RX/TX plug on the test box in the TX CM connector and connect a voltmeter to 1 and 10.
Key the transmitter.
Adjust L3 (XO906 - PWR) for maximum voltmeter reading.
Adjust L16 (PL962) for maximum voltmeter reading (approximately 0.85 V).

Connect the voltmeter to 1 and 9.

Adjust L3 (XO906), L15 and L16 (PL962) for maximum voltmeter reading, 0.7 V - 1.0 V.

Connect the voltmeter to 1 and 8.

Detune L11 and L12 (PL962) outwards as much as possible. Then adjust L12 for maximum voltmeter reading, and after this adjust L11 for minimum reading (2.8 V).

CAUTION

The maximum of L12 and minimum of L11 shall be well defined and easy to find.
Do not readjust L12 to find the minimum of L11.

PL962 ALIGNMENT

Use two voltmeters M1 and M2.
Connect the voltmeter to 1 and 7.
Adjust C2 (PL962) slowly until the voltmeter reading goes high, approx. 0.7 V.
The PLL is inlock.
Select channel 001. (453.000 MHz).
Connect the voltmeter M2 to 1 and 6.
To adjust C2 with PLL in lock, measure the highest and lowest TX PLL tune voltage on M2 and calculate the center TX PLL tune voltage.

$$V_{TX\ PLL\ tune} = \frac{V_{high} + V_{low}}{2}$$

Adjust C2 until the calculated TX PLL tune voltage is read on voltmeter M2.

TRANSMITTER FREQUENCY ADJUSTMENT

Before adjusting the exciter frequency the synthesizer frequency should be checked, refer to Frequency Synthesizer Adjustment.

Connect the frequency counter to the PL962 output (J1) through an attenuator (output level 0.5 W).
Select channel 001. (453.000 MHz).

The frequency is adjusted with L2 (XO906)-FREQ.
Requirement: 453.000000 MHz ± 100 Hz.

NOTE.
The transmitter shall be unmodulated when adjusting the frequency.

FINAL FREQUENCY ADJUSTMENT XO906

Because of power supply and load variations the oscillator must be adjusted to the correct frequency after being installed. The graph shows the frequency error in setting the frequency as the ambient temperature varies about the reference, approx 28.6°C.
All oscillators fall within the upper and lower limit but since each oscillator's characteristic is unknown the average curve should be used.
The metal can must be in place when adjusting.

Example:
The frequency is adjusted at 23°C (equipment's temperature).
453.00000 MHz + 453 Hz= 453.000453 MHz
Refer to frequency error curve page 5.

TRANSMITTER POWER OUTPUT ADJUSTMENT

Connect a UHF power meter to the antenna connector.
Select channel 90. (465.225 MHz).
Key the transmitter with power reduction 1.5 W, refer to service mode operation.
Adjust R9 (Power-PA962) for 1.5 W ± 0.5 dB.

Key the transmitter without power reduction, refer to service mode operation.
Adjust R70 (CL908) for 15 W ± 0.5 dB.

TRANSMITTER MODULATION ADJUSTMENT

Connect the deviation meter through an attenuator and a signal sampler to the antenna connector.
Select channel 001. (453.000 MHz).
Connect a signal generator to the signal sampler.

Set the generator frequency to the receiver frequency.
Set the generator output to 1 mV EMF, unmodulated.
Connect an AF generator to the microphone input J5 on C9JB04.

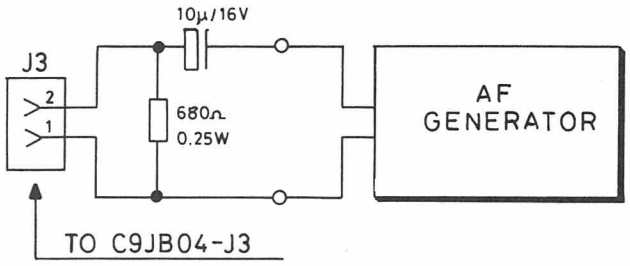

Select 'Hands free' mode by pushing 1 - 🔈, and ▢ - ▭ .
Set the AF generator frequency to 1 kHz and the output to 1 V.

Set R51 on FN907 to its middle position.
Adjust R24 on PL962 for Δf= 5.5 kHz ±200 Hz.
Adjust R51 on FN907 for Δf= 4.2 kHz ±50 Hz.

Set the AF frequency to 1000 Hz.
Reduce the AF generator output until the deviation is Δf= 3.0 kHz.

The AF generator level for ±3.0 kHz deviation at 1000 Hz should be 100 mV ±5 dB.

PILOT TONE ADJUSTMENT

Connect the deviation meter through an attenuator and a signal sampler to the antenna connector.
Connect an AF generator to the microphone input J5 on C9JB04.
Select channel 001. (453.000 MHz).
Connect a signal generator to the signal sampler.

Set the signal generator frequency to the receiver frequency and set the output to 1 mV EMF.
Modulate the signal generator with 4000 Hz ±10 Hz and frequency deviation ±300 Hz ±10 Hz.

Disable the microphone input by pressing 1 - ▭, and enable 4 kHz (φ signal) by pressing 1 - S1.
Adjust R14 (FN907) for a frequency deviation, of ±300 Hz ±10 Hz as measured with the deviation meter.

Increase the frequency deviation on the signal generator slowly to ±1 kHz and check for equal frequency deviation as measured with the deviation meter.
Increase the frequency deviation further up to ±3 kHz and check for the transmitter frequency deviation being limited to approximately ±1.5 kHz.
Disable the 4 kHz (φ signal) by pressing ▢ - S1.

DATA MODULATION ADJUSTMENT

Use the same test setup as described for Pilot Tone Adjustment.
Turn the signal generator modulation off.
Turn the FFSK telegram on, push 1 - ↦ on the control head.
Adjust R5 on CL908 for Δf= 4.2 kHz peak (1800 Hz signal) frequency deviation as measured with the deviation meter.

MEASURING THE TRANSMITTER CURRENT DRAIN

Measure the current drain at V_{BAT}= 13.6 V.

RF output	15 W	1.5 W	0.15 W
Mobile	<7.5 A	<3.5 A.	<3.5 A
Transportable	<10 A	<6 A	<6 A

This must be checked for channel 001, 090 and 180.

Storno

IA907, IA908, IA909

ADJUSTMENT PROCEDURE

The normal adjustment procedure only describes how to fine tune the IF module.
If however, the module is badly misaligned or has been repaired it must be tuned as follows:

Disconnect the cable from connector J1 on IA90x.
Connect a signal generator to J1 with a cable terminated with a matching pad.

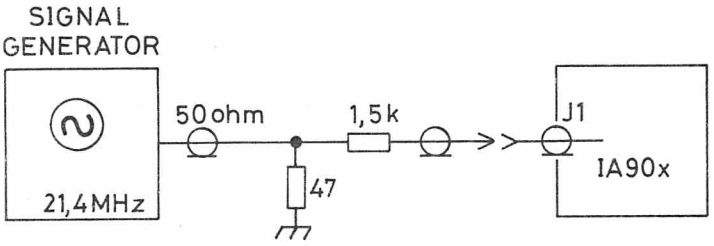

IA907, IA908, IA909
ADJUSTMENT PROCEDURE
D403.721

Connect a voltmeter to central RX metering connector 1 and 3.
Adjust the signal generator output to a level (low) which gives a deflection on the voltmeter but below the limiting point.
Adjust L1, L2 and L3 for maximum voltmeter deflection.
If necessary reduce the signal output level as to reach absolute maximum.

Set the signal generator output to 3 mV output.
Set the modulation to:

- ±3 kHz for IA907
- ±1.5 kHz for IA908 and IA909

Connect an AF voltmeter to pin 1 on P1 (IA90x).

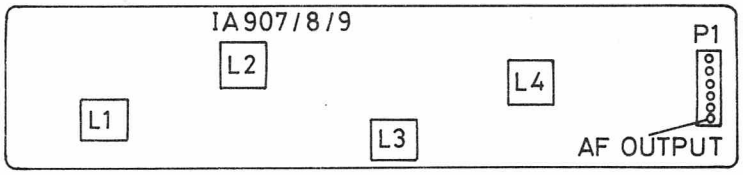

D403.721

Adjust L4 for maximum AF signal output.

Remove the signal generator and re-establish the input cable connection.
Perform the fine tuning as described in the adjustment procedure.

FRONT END AND DUPLEX FILTER ADJUSTMENT

STORNOMATIC 900

ADJUSTMENT OF RC963 FRONT-END AND BF964 DUPLEX FILTER

The RC963 and BF964 helical filter resonators have been factory adjusted and reajustment should not be attempted unless the necessary test and measuring equipment is available and it has definitely been established that the filter is maladjusted and not defective.

TEST AND MEASURING EQUIPMENT

Signal generator	400-470 MHz
	1 uV-1 V output
Tracking generator	
Spectrum analyzer	400-470 MHz

BF964 shorting devices for W1-W9
Test cables with phono connectors 50 ohm
Dummy load.

ADJUSTMENT OF RC963 FILTER

Adjust the injection signal, refer to RC963 adjustment procedure.

Remove the injection signal to RC963 by disconnecting plug P1 on PL961.
Connect the tracking generator to the antenna connector.
Connect the spectrum analyzer to RX CM1 and 5 (Q1 source).
Preadjust the tuning slugs TS1-TS5 according to the following diagram:

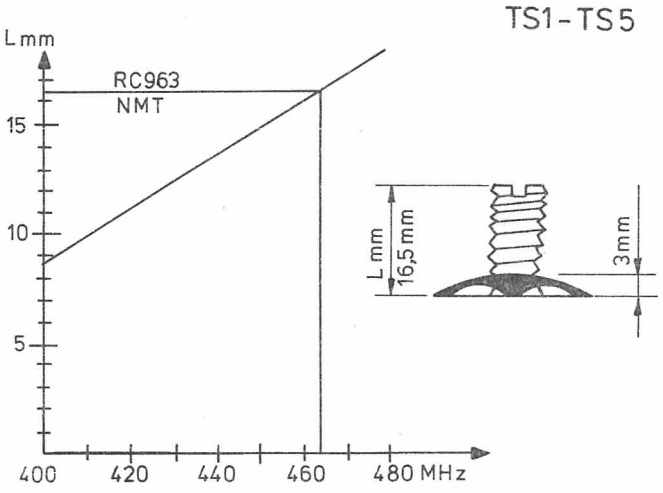

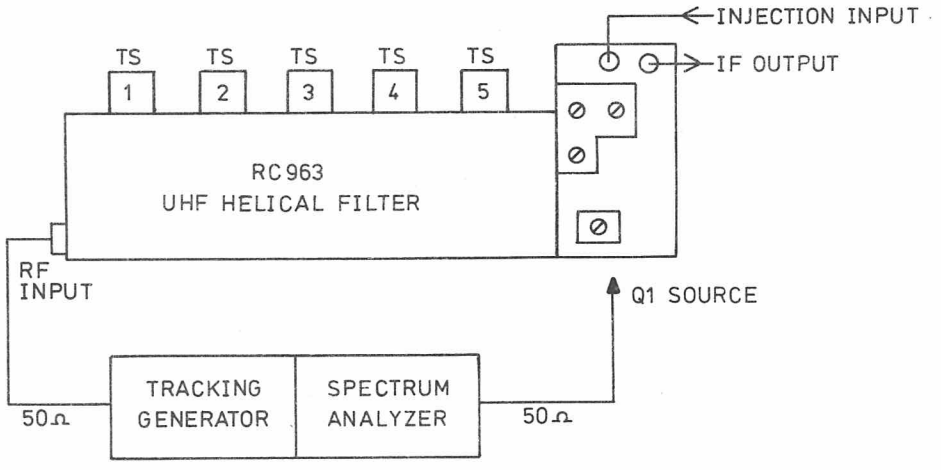

RC963 TEST SET- UP

Adjust TS1, TS2, TS3, TS4 and TS5 for maximum signal as seen on the spectrum analyzer. The -1 dB points shall be above 468.1 MHz and below 462.7 MHz.

Restore the injection signal connection, P1 on PL961.
Check the receiver sensitivity on channel 01 and channel 180, refer to technical specifications.

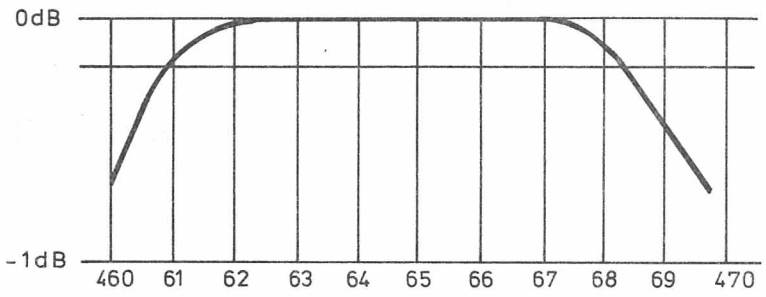

RC963 HELICAL FILTER CHARACTERISTIC

ADJUSTMENT OF DUPLEX FILTER BF964

The BF964 duplex filter is designed for the NMT frequency bands, TX 453.0 - 457.5 MHz and RX 463.0 - 467.5 MHz, with five resonators in the TX branch and two resonators in the RX branch.
The filter must be removed from the radio for access to the adjustable components.

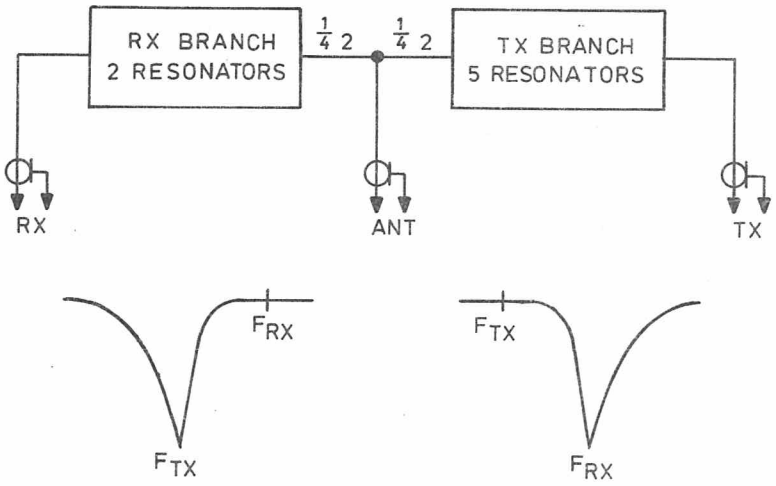

ALIGNMENT PROCEDURE

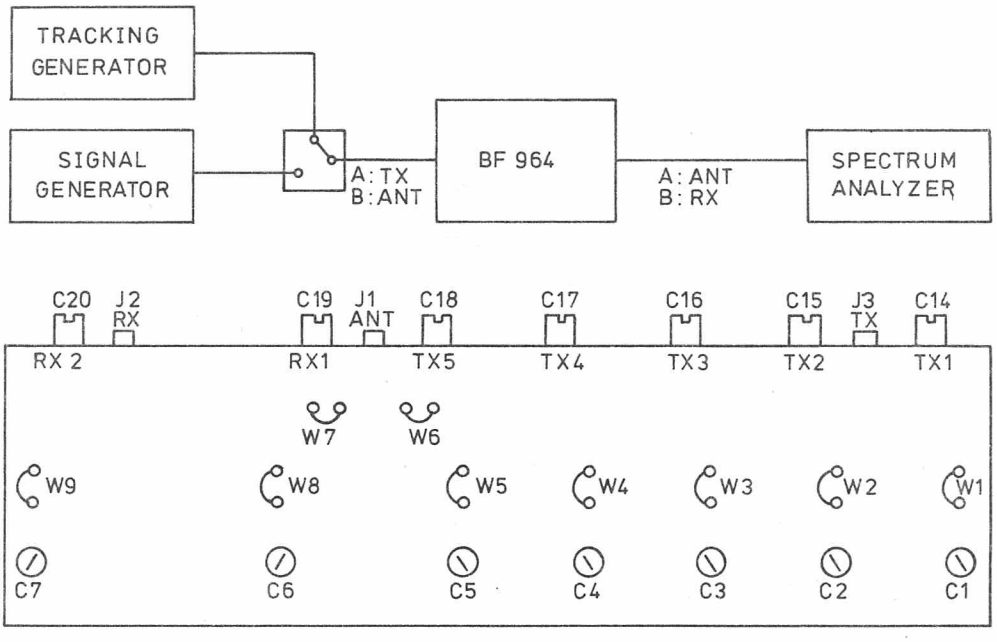

BF964 TEST SET-UP AND ADJUSTABLE COMPONENTS

Disconnect all straps W1 to W9.
Preset all tuning slugs according to the following table:

C (Slug)	L mm	F (-2 dB) MHz	F-notch F series MHz	Notch depth. dB	Resonator
14	12.4	458.7	467.85	32	TX_1
15	12.4	458.9	463.1	27	TX_2
16	12.4	457.9	465.45	30	TX_3
17	12.0	460.0	463.0	23	TX_4
18	12.9	459.8	462.6	23	TX_5
19	14.0	460.6	457.8	24	RX_1
20	14.8	458.7	453.8	27	RX_2

Table 1

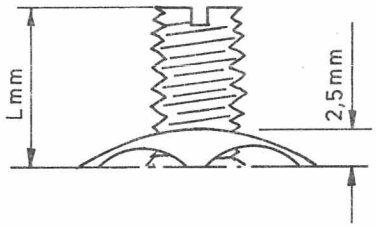

Adjustment of TX-branch resonators TX1-TX5
Connect the signal generator to the TX connector J3 and set its frequency to the notch frequency (F series) stated in table 1.
Connect the spectrum analyzer to the ANT connector J1.
Short W1 and W6.

Adjust C1 for maximum notch depth.
Use C1 and C14 simultaneously to tune for a notch depth as stated in table 1.

If the notch is too small turn C14 clockwise while tuning C1 for series resonance. On the other hand, if the notch is too deep turn C14 counterclockwise while tuning C1 for series resonance.

When the notch has the correct depth set the signal generator to F (-2 dB), table 1, and fine tune the 2 dB point by means of C14.

Set the generator to the notch frequency and fine tune C1 for maximum notch depth.
Remove the short from W1 and short W2.
Repeat the above adjustment procedure for resonator TX_2 using C2 and C15.
Remove the short from W2 and short W3.
Repeat the above adjustment procedure for resonator TX_3 using C3 and C16.
Remove the short from W3 and short W4.
Repeat the above adjustment procedure for resonator TX_4 using C4 and C16.
Remove the short from W4 and short W5.
Repeat the above adjustment procedure for resonator TX_5 using C5 and C17.
When all TX resonators have been properly adjusted disconnect W6 and connect W1, W2, W3, W4 and W5.

Adjustment of RX-branch resonators RX1 and RX2
Connect the signal generator to the RX connector J2 and set its frequency to the notch frequency (F series) stated in table 1.
Connect the spectrum analyzer to antenna connector J1.
Short W7 and W8.
Adjust C6 for maximum notch depth.
Use C6 and C19 simultaneously to tune for a notch depth as stated in table 1.

If the notch is too small turn C19 counterclockwise while tuning C6 for series resonance.
On the other hand, if the notch is too deep turn C19 clockwise while tuning C6 for series resonance.

When the notch has the correct depth set the signal generator to F (-2 dB) and fine tune the 2 dB point by means of C19.
Set the signal generator to the notch frequency.
Fine tune C6 for maximum notch depth.
Remove the short from W8 and short W9.
Repeat the above adjustment procedure for resonator RX_2 using C7 and C20.
When the RX resonators have been properly adjusted short W8 and W9.
Measure the insertion loss and attenuation of RX and TX branches (at room temperature 25°C).

Insertion Loss

RX-branch: 1.3 dB (453.0 - 457.5 MHz)

TX-branch: 1.0 dB (463.0 - 467.5 MHz)

Attenuation of TX frequency in RX-branch

24 dB (453.0 - 457.5 MHz)

Attenuation of RX frequency in TX-branch

60 dB (463.0 - 467.5 MHz)

RX-BRANCH

Connect the tracking generator to antenna connector J1.

Connect the spectrum analyzer to RX connector J2.

Connect the 50 ohm dummy load to TX connector J3.

TX-BRANCH

Connect the tracking generator to antenna connector J1.

Connect the spectrum analyzer to TX connector J3.

Connect the 50 ohm dummy load to RX connector J2.

NOTE

The specified insertion loss does not include loss in cables and attenuators, etc.

The spectrum analyzer input must be 50 ohm (ohmic input attenuator).

Storno

Storno

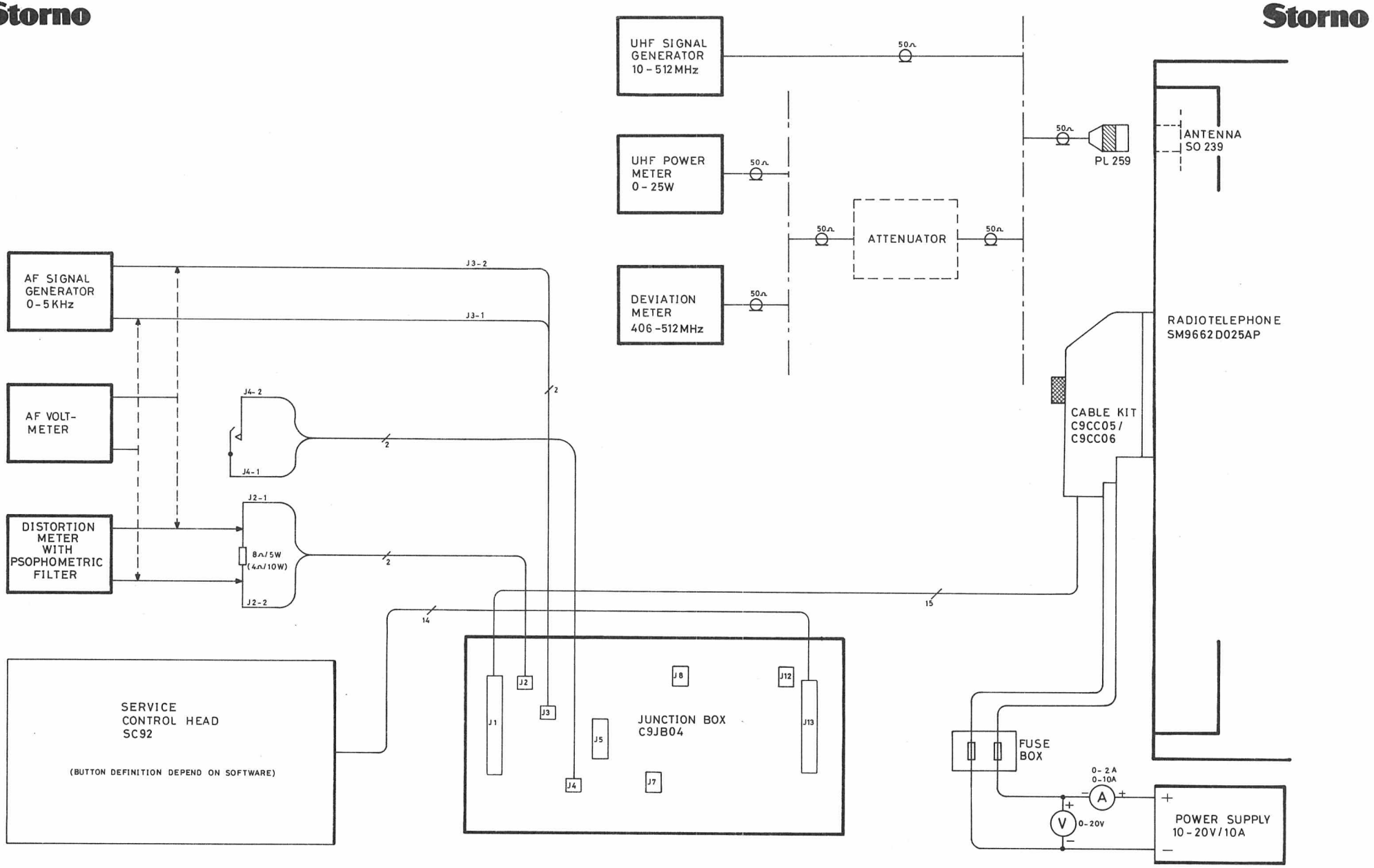

TEST SETUP SM9662D025AP

D 403.739

CHAPTER
CHAPITRE
KAPITEL

9

Storno

ITEM NUMBER 2.0001-01

DESCRIPTION SM9662D025APS00000, - STORNOMATIC 900 - - MOBILE N M T - RADIO, VERSION 2.

S T A T I O N S U R V E Y :

M A I N M O D U L E S A N D P A R T S

SPECIAL REFERENCES	COMPONENT ITEM NUMBER	COMPONENT DESCRIPTION	QUANTITY TOTAL
	A701248G2	SIDE RAIL R	1
	A701248G6	SIDE RAIL L	1
SEE: PAGE 2	A701273G1	RF-CABLE KIT, F. DUPLEX B	(1)
SEE:X403.880	A701453G11	XO 906 TX PLL 5PPM	1
SEE:X403.881	A701453G5	XO 905 RX LS 5PPM	1
	B800004P3	KEY	1
	C850544G2	PLT MTG EXT DUPL	1
	C850573G2	CAN, F. FS9011	1
	C850573G3	CAN, F. PL962	1
	C850573G4	CAN, F. PL961	1
	C850585G1	CHAS MOD DUPLEX "B"	1
	C850592G1	POWER CABLE-VR 902	1
	D900057P1	COVER, F. FS9011	1
	D900057P2	COVER, F. PL961	1
	D900057P3	COVER, F. PL962	1
	D900058P2	COVER, F. IA907	1
SEE: PAGE 2	D900073G1	ASM FRONT	1
	J707417P1	IC, PERS.-PROM,FUS.-LK. 256X4,	1
	J706449P5	NAME PLATE COMB	1
SEE: PAGE 2	J706615G1	HARDWARE KIT	1
	J707566P10	X-TAL, TX, 48.91111 MHZ	1
	J707566P8	X-TAL, RX, 47.64444 MHZ	1
	J707758G1	ANT SW 903 ASM B	1
	J707886P3	LABEL PATENT	1
	K805384G1	COV ASM PA9XX	1
	K805500G1	CA TX PWR	1
	K805500G2	CA TX PWR	1
	K805501G1	CA PWR CONT	1
SEE:X403.691	L855013G2	VR 901 5.6 V	1
SEE:X403.352/2	L855055G1	RC 963	1
SEE:X403.700	L855111G1	BF 964	1
	L855155P2	NAME PLATE	1
	L855337G1	CAN ASM IA907/908/909	1
SEE:X403.698/2	L855358G1	AA 908	1
SEE:X403.692/2	L855536G6	CPNT BD PW FS 9011	1
SEE:X403.725/2	L855541G1	COMP BD PW TR 903	1
SEE:X403.699/3	L855545G1	CPNT BD PW FN 907	1
SEE:X403.348/2	M905002G1	PL 961	1
SEE:X403.349/2	M905003G1	PL 962	1
SEE:X403.693/2	M905348G1	IA 907 25KHZ	1
	M905472G2	COVER BOTTOM B DUPLEX	1
	M905473G2	COVER TOP B DUPLEX	1
SEE:X403.716	M905490G2	PA 9613	1
SEE:X403.697/3	M905753G2	CPNT BD PW AA 9017	1
SEE:X403.724/4	M905757G1	CPNT BD PW CL 908	1
SEE:X403.707	M905772G1	JP 909	1

SPECIAL REMARKS	COMPONENT ITEM NUMBER	COMPONENT DESCRIPTION	QUANTITY TOTAL
	A701273G1 :	CC904, RF-CABLE KIT :	
W17	A701632G2	RF-CABLE, F. FS9011 // PL961,	1
W20	A701633G2	RF-CABLE, F. FS9011 // PL962,	1
W9/W18	A701634G2	RF-CABLE,: PL961 // RC963 AND RC963 // IA907,	1
W22	A702384G1	RF-CABLE, F. PL962 // PA9613,	1
W27	B800566P29	RF-CABLE, F. BF964 // RC963,	1
W28	B800566P33	RF-CABLE, F. PA9613 // BF964,	1
	J706615G1 :	HARDWARE KIT :	
0001	A700036P425	SCREW PAN HD M-3.0 X 25.0	1
0002	A700036P408	SCREW PAN HD M-3.0 X 8.0	16 *
0003	A700036P410	SCREW PAN HD M-3.0 X 10.0	11 *
0004	A700031P406	SCREW PAN HD M-3.0 X 6.0	9 *
0005	A700036P410	SCREW PAN HD M-3.0 X 10.0	12 *
0006	A700031P410	SCREW PAN HD M-3.0 X 10.0	6
0007	A700031P405	SCREW PAN HD M-3.0 X 5.0	4
0008	A700035P408	SCREW FLAT HD M-3.0 X 8.0	4
0009	A700035P410	SCREW FLAT HD M-3.0 X 10.0	6
0010	A700031P610	SCREW PAN HD M-4.0 X 10.0	3
0011	A701240P414	SCREW MACH SOCK HD 4X16	8
0012	A701243G1	SUPPORT	2
0013	A701035P1	GASKET	4
0014	J706617P1	SPACER	3 *
0015	A701108P1	CLAMP	2
0016	B800511P2	GASKET	1
0017	J706616P1	SPACER	1
0018	A701289P1	RING RETAINING	4
0019	A700034P4	NUT HEX M-3.0 X 0.50	2
0020	A700032P5	WASHER LOK TOH D-3.0	2
0021	A700127P1	O-RING	1
0022	B800557P1	CONTACT	1
0023	J706617P2	SPACER	1
0024	A700035P410 *	SCREW FLAT HD M-3.0 X 10.0 *	2
0025	J707443P1	TERMINAL SLD D6.0X28.6	1
0026	A700031P413 *	SCREW PAN HD M-3.0 X 13.0 *	1
0027	* A701023P1	* FOOT *	4
	D900073G1 :	ASM FRONT M900 / SM900 :	
	A700036P410	SCREW PAN HD M-3.0 X 10.0	8
	A700132P814	PIN	2
	A700140P1	SPRING	1
	A700143P1	CATCH FRICTION	2
	A701010P1	CAM	1
	A701013P1	GASKET	1
	B800004P4	LOCK	1
	B800506P1	COVER	1
	C850501P1	PAWL LOCK	1
	C850513P1	GUIDE LOCK	1
	K805424G1	HANDLE	1
	M905676G1	FR PAINT ASM	1

Storno

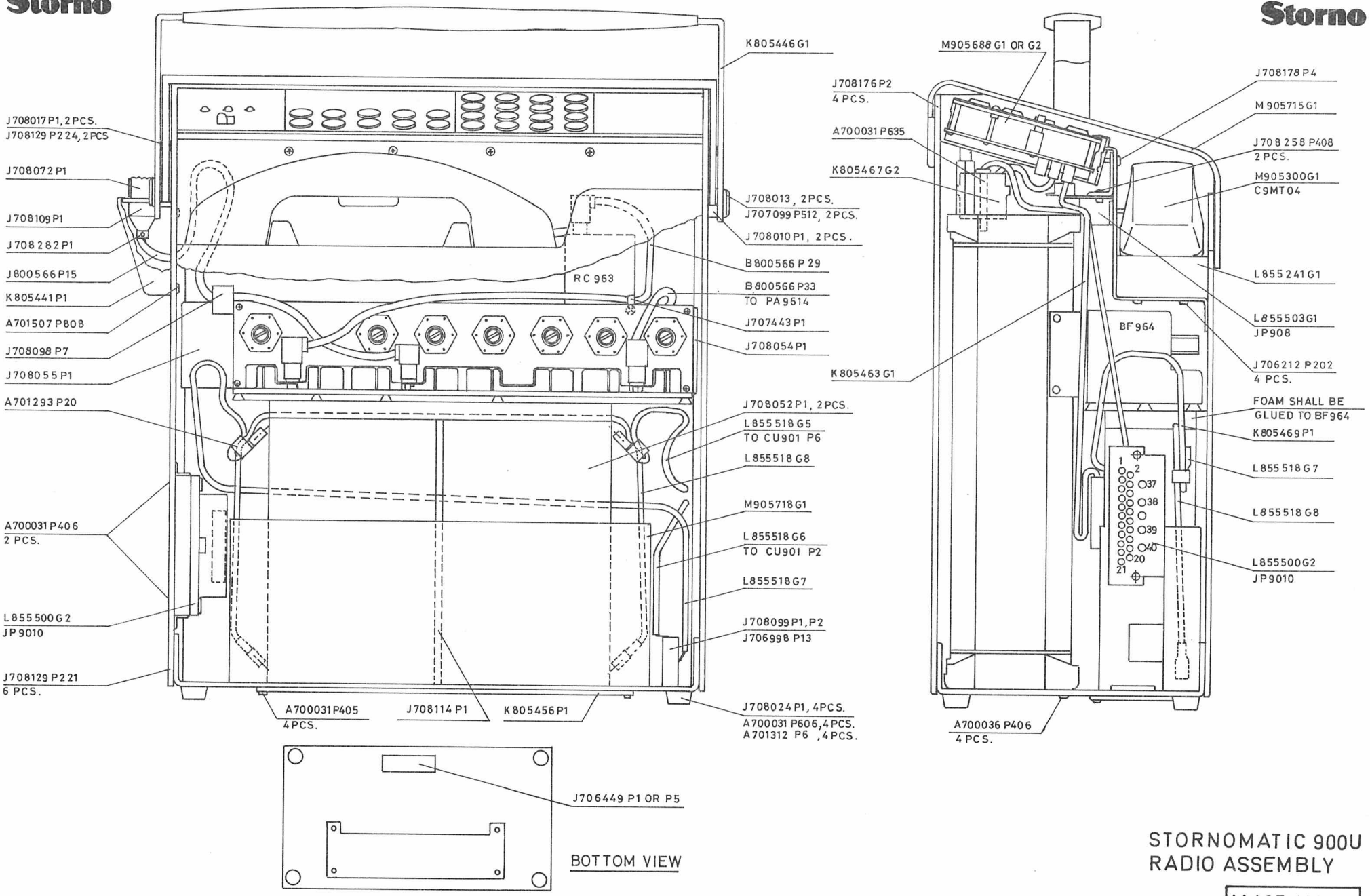

Storno

STORNOMATIC 900U
RADIO ASSEMBLY

M405.131

ITEM NUMBER	DESCRIPTION
M905690G5	PORTABLE NMT RADIO - DENMARK
M905690G7	PORTABLE NMT RADIO - NORWAY

S T A T I O N S U R V E Y :

M A I N M O D U L E S A N D P A R T S

CIRCUIT POSITION	COMPONENT ITEM NUMBER	COMPONENT DESCRIPTION	QUANTITY TOTAL
		MAIN MODULES:	
A001	M905753G2	CPNT BD PW AA 9017	1
A002	L855358G1	AA 908	1
A003	L855111G1	BF 964	1
A004	M905757G1	CPNT BD PW CL 908	1
A005	M905711G1	CPNT BD PW CU 901	1
A006	L855545G1	CPNT BD PW FN 907	1
A007	L855536G6	CPNT BD PW FS 9011	1
A008	M905772G1	JP 909	1
A009	L855541G1	CPNT BD PW TR 903	1
A010	M905490G3	PA 9614	1
A011	M905002G1	PL 961	1
A012	M905003G1	PL 962	1
A013	L855055G1	RC 963	1
A014	L855013G2	VR 901 5.6 V	1
A016	A701453G5	XO 905 RX LS 5PPM	1
Y001	J707566P8	X-TAL, 47.64444 MHZ, +4.5PPM	1
A017	A701453G11	XO 906 TX PLL 5PPM	1
Y002	J707566P10	X-TAL, 48.91111 MHZ, +4.5PPM	1
A018	M905688G3	CONTROL UNIT D AND N -N O T E !:- -SEE BELOW FOR ASSY'S AND PARTS-	1
A020	L855503G1	JP 908	1
A021	L855500G2	JP 9010	1
A022	K805300G1	C9MT04	1
A023	M905348G1	IA 907 25KHZ	1
B001	J708052P1	BATTERY STOR LEAD 6V	2
E001	J708084P1	AN 961	1
F001	J706998P13	FUSE CTG 10.0A	1
		MECHANICAL PARTS:	
W001	A701633G2	CABLE COAX	1

CIRCUIT POSITION	COMPONENT ITEM NUMBER	COMPONENT DESCRIPTION	QUANTITY TOTAL
W002	A701632G2	CABLE COAX	1
W003	A702384G2	CABLE COAX	1
W004	A701634G2	CABLE COAX	1
W005	B800566P29	CABLE ASSY RF COAX 50R	1
W006	B800566P33	CABLE ASSY RF COAX 50R	1
W007	L855518G1	CABLE ASM	1
W008	L855518G2	CABLE ASM	1
W009	L855518G3	CABLE ASM	1
W010	L855518G4	CABLE ASM	1
W011	L855518G5	CABLE ASM	1
W012	L855518G6	CABLE ASM	1
W013	K805474G2	CA ASM	1
W014	K805475G1	CA ASM	1
W015	L855518G7	CABLE ASM	1
W016	L855518G8	CABLE ASM	1
W017	K805463G1	CABLE ASM	1
W018	B800566P15	CABLE ASSY RF COAX 50R	1
W020	J708111G2	CABLE ASM	1
XF01	J708099P1	HOLDER FUSE	1
XF02	J708099P2	HOLDER FUSE	1
0002	L855337G1	CAN ASM IA907/908/909	1
0003	C850573G2	CAN	1
0004	C850573G3	CAN	1
0005	C850573G4	CAN	1
0006	D900058P2	COVER	1
0008	D900057P2	COVER	1
0009	D900057P3	COVER	1
0010	K805384G1	COV ASM PA9XX	1
0011	M905715G1	COVER ASM	1
0012	M905718G1	COVER ASM	1
0013	M905716G1	CABINET ASM	1
0014	L855519P1	FRONT DRILLED	1
0015	C850585G1	CHAS MOD DUPLEX "B"	1
0016	L855241G1	ASM HOLDER SC93	1
0017	J708054P1	HOLDER DUPLEX	1
0018	J708055P1	HOLDER DUPLEX	1
0019	K805441P1	PROTECT	1
0020	K805461G1	FRAME SIDE R SP9	1
0021	K805461G2	FRAME SIDE L SP9	1
0022	J708010P1	BUSHING	2
0023	J708013P1	BUSHING	2
0024	J708017P1	BUSHING	2
0025	K805446G1	HANDLE ASM	1
0026	K805124G1	ASM CAN	1
0027	M905044P1	COVER	1
0028	L855153P1	INS SHEET	1
0029	A700031P404	SCREW PAN HD M 3.0 X 4.0 MM	3
0030	A700115P3	INSULATOR PLATE	1
0031	A701983P2	WASH NON MET 3.1 X 6.0 MM	1
0032	A700036P310	SCREW PAN HD M2.5 X 10.0 MM	1
0033	A700036P408	SCREW PAN HD M3.0 X 8.0 MM	7
0034	J708258P408	SCREW	2
0035	A701312P3	WASHER M2,2	1

CIRCUIT POSITION	COMPONENT ITEM NUMBER	COMPONENT DESCRIPTION	QUANTITY TOTAL
0038	A700036P425	SCREW PAN HD M3.0 X 25.0 MM	1
0039	A700036P410	SCREW PAN HD M3.0 X 10.0 MM	4
0040	A700031P406	SCREW PAN HD M3.0 X 6.0 MM	5
0041	A700031P410	SCREW PAN HD M3.0 X 10.0 MM	7
0042	A700031P405	SCREW PAN HD M3.0 X 5.0 MM	4
0043	J707443P1	TERMINAL SLD D6.0 X 28.6 MM	1
0044	A700035P410	SCREW FLAT HD M3.0 X 10.0 MM	6
0045	A700031P610	SCREW PAN HD M4.0 X 10.0 MM	3
0046	A701240P414	SCREW MACH SOCK HD 4 X 16 MM	8
0047	A701293P20	SLEEVING GREEN	
0048	A701035P1	GASKET	4
0049	J706617P1	SPACER	3
0050	A701108P1	CLAMP	2
0051	B800511P2	GASKET	2
0052	J706616P1	SPACER	4
0053	A701289P1	RING RETAINING	3
0054	J708113P1	PIN	2
0055	J708282P1	BUSH	1
0056	A700031P635	SCREW PAN HD M4.0 X 35.0 MM	1
0058	J706617P2	SPACER	1
0061	J708098P7	CLAMP	1
0062	J708072P1	CONN COAX UHF	1
0063	A700031P606	SCREW PAN HD M4.0 X 6.0 MM	4
0064	J707099P512	SCREW	2
0065	J708129P224	SCREW	2
0066	J708129P221	SCREW	6
0067	J706212P202	SCREW PAN HD SZ 4.0 X 6.4 MM	4
0068	J708109P1	NUT	1
0069	A701507P808	SCREW PAN HD SZ4.2X12.7AB	3
0070	J708024P1	BMPR	4
0071	J708176P2	SCREW	4
0075	J706449P1	NAME PLATE COMB	1
0077	K805456P1	COVER BATTERY	1
0080	J708178P4	SCREW	4
0081	A701312P6	WASH	4
0084	J708275P1	INSTRUCTION OPR 900U	1
A018 :	M905688G3 :	CONTROL UNIT D AND N :	
A001	M905165G3	ASM MAIN BOARD , 2.ND VERSION	1
A002	L855197G1	ASM DIS BD SC92/3P0X	1
A003	L855176G2	ASM KEY BD SC92/3P0X = DK-N	1
A004	L855177G6	ASM KEY BD SC92/3P0X, 5 X 2	1
A005	L855497G2	AC 902	1
C001	A700007P41	CAP CER NPO 39P 5% 50V	1
C002	A700007P41	CAP CER NPO 39P 5% 50V	1
C003	A700007P41	CAP CER NPO 39P 5% 50V	1
C004	A700007P41	CAP CER NPO 39P 5% 50V	1

CIRCUIT POSITION	COMPONENT ITEM NUMBER	COMPONENT DESCRIPTION	QUANTITY TOTAL
C005	A700007P41	CAP CER NPO 39P 5% 50V	1
C006	A700007P41	CAP CER NPO 39P 5% 50V	1
C007	A700007P41	CAP CER NPO 39P 5% 50V	1
C008	A700007P41	CAP CER NPO 39P 5% 50V	1
C009	A700007P41	CAP CER NPO 39P 5% 50V	1
C010	A700007P41	CAP CER NPO 39P 5% 50V	1
0003	J707712P4 *	LS PERM MAG, 3 OHMS, 3W	1
0004	J708078P1	HOLDER LOADSPEAKER	1
0005	J708077P1	GRILL LS	1
0006	L855492G1	EXTRUSION MACHINED	1
0008	J706427P2	PAPER	1
0009	K805145G1	ASM DIS SCRN CB 90X	1
0010	J706594P1	EARPHO	1
0011	K805465G1	CABLE ASM	1
0012	J708178P1	SCREW PAN HD M3.0 X 5 MM	4
0013	J708105P1	SCREEN	1
0014	K805451P1	COVER	1
0015	J706629G1	ASM CA MT903	1
0016	K805472G1	SHIELD	1
0017	K805473G1	SHIELD	1
0018	J708122P1	SPRING	2
0020	J706076P3	WASHER SPG 2.0 X 4.9 MM	6
0021	A700031P205	SCREW PAN HD M2.0 X 5.0 MM	6
0022	A700133P17	WIRE 0,500 DIA	
0023	J706997P2	TAPE PYES WDH 9.53	
0024	A701278P12	SLEEVING	

ITEM NUMBER	DESCRIPTION
M905690G6	PORTABLE NMT RADIO - SUOMI , FINLAND
M905690G8	PORTABLE NMT RADIO - SWEDEN

S T A T I O N S U R V E Y :

M A I N M O D U L E S A N D P A R T S

CIRCUIT POSITION	COMPONENT ITEM NUMBER	COMPONENT DESCRIPTION	QUANTITY TOTAL
		MAIN MODULES:	
A001	M905753G2	CPNT BD PW AA 9017	1
A002	L855358G1	AA 908	1
A003	L855111G1	BF 964	1
A004	M905757G1	CPNT BD PW CL 908	1
A005	M905711G1	CPNT BD PW CU 901	1
A006	L855545G1	CPNT BD PW FN 907	1
A007	L855536G6	CPNT BD PW FS 9011	1
A008	M905772G1	JP 909	1
A009	L855541G1	CPNT BD PW TR 903	1
A010	M905490G3	PA 9614	1
A011	M905002G1	PL 961	1
A012	M905003G1	PL 962	1
A013	L855055G1	RC 963	1
A014	L855013G2	VR 901 5.6 V	1
A016	A701453G5	XO 905 RX LS 5PPM	1
Y001	J707566P8	X-TAL, 47.64444 MHZ, +4.5PPM	1
A017	A701453G11	XO 906 TX PLL 5PPM	1
Y002	J707566P10	X-TAL, 48.91111 MHZ, +4.5PPM	1
A019	M905688G4	CONTROL UNIT F AND S -N O T E !:- -SEE BELOW FOR ASSY'S AND PARTS-	1
A020	L855503G1	JP 908	1
A021	L855500G2	JP 9010	1
A022	K805300G1	C9MT04	1
A023	M905348G1	IA 907 25KHZ	1
B001	J708052P1	BATTERY STOR LEAD 6V	2
E001	J708084P1	AN 961	1
F001	J706998P13	FUSE CTG 10.0A	1
		MECHANICAL PARTS:	
W001	A701633G2	CABLE COAX	1

CIRCUIT POSITION	COMPONENT ITEM NUMBER	COMPONENT DESCRIPTION	QUANTITY TOTAL
W002	A701632G2	CABLE COAX	1
W003	A702384G2	CABLE COAX	1
W004	A701634G2	CABLE COAX	1
W005	B800566P29	CABLE ASSY RF COAX 50R	1
W006	B800566P33	CABLE ASSY RF COAX 50R	1
W007	L855518G1	CABLE ASM	1
W008	L855518G2	CABLE ASM	1
W009	L855518G3	CABLE ASM	1
W010	L855518G4	CABLE ASM	1
W011	L855518G5	CABLE ASM	1
W012	L855518G6	CABLE ASM	1
W013	K805474G2	CA ASM	1
W014	K805475G1	CA ASM	1
W015	L855518G7	CABLE ASM	1
W016	L855518G8	CABLE ASM	1
W017	K805463G1	CABLE ASM	1
W018	B800566P15	CABLE ASSY RF COAX 50R	1
W020	J708111G2	CABLE ASM	1
XF01	J708099P1	HOLDER FUSE	1
XF02	J708099P2	HOLDER FUSE	1
0002	L855337G1	CAN ASM IA907/908/909	1
0003	C850573G2	CAN	1
0004	C850573G3	CAN	1
0005	C850573G4	CAN	1
0006	D900058P2	COVER	1
0008	D900057P2	COVER	1
0009	D900057P3	COVER	1
0010	K805384G1	COV ASM PA9XX	1
0011	M905715G1	COVER ASM	1
0012	M905718G1	COVER ASM	1
0013	M905716G1	CABINET ASM	1
0014	L855519P1	FRONT DRILLED	1
0015	C850585G1	CHAS MOD DUPLEX "B"	1
0016	L855241G1	ASM HOLDER SC93	1
0017	J708054P1	HOLDER DUPLEX	1
0018	J708055P1	HOLDER DUPLEX	1
0019	K805441P1	PROTECT	1
0020	K805461G1	FRAME SIDE R SP9	1
0021	K805461G2	FRAME SIDE L SP9	1
0022	J708010P1	BUSHING	2
0023	J708013P1	BUSHING	2
0024	J708017P1	BUSHING	2
0025	K805446G1	HANDLE ASM	1
0026	K805124G1	ASM CAN	1
0027	M905044P1	COVER	1
0028	L855153P1	INS SHEET	1
0029	A700031P404	SCREW PAN HD M 3.0 X 4.0 MM	3
0030	A700115P3	INSULATOR PLATE	1
0031	A701983P2	WASH NON MET 3.1 X 6.0 MM	1
0032	A700036P310	SCREW PAN HD M2.5 X 10.0 MM	1
0033	A700036P408	SCREW PAN HD M3.0 X 8.0 MM	7
0034	J708258P408	SCREW	2
0035	A701312P3	WASHER M2,2	1

CIRCUIT POSITION	COMPONENT ITEM NUMBER	COMPONENT DESCRIPTION	QUANTITY TOTAL
0038	A700036P425	SCREW PAN HD M3.0 X 25.0 MM	1
0039	A700036P410	SCREW PAN HD M3.0 X 10.0 MM	4
0040	A700031P406	SCREW PAN HD M3.0 X 6.0 MM	5
0041	A700031P410	SCREW PAN HD M3.0 X 10.0 MM	7
0042	A700031P405	SCREW PAN HD M3.0 X 5.0 MM	4
0043	J707443P1	TERMINAL SLD D6.0 X 28.6 MM	1
0044	A700035P410	SCREW FLAT HD M3.0 X 10.0 MM	6
0045	A700031P610	SCREW PAN HD M4.0 X 10.0 MM	3
0046	A701240P414	SCREW MACH SOCK HD 4 X 16 MM	8
0047	A701293P20	SLEEVING GREEN	
0048	A701035P1	GASKET	4
0049	J706617P1	SPACER	3
0050	A701108P1	CLAMP	2
0051	B800511P2	GASKET	2
0052	J706616P1	SPACER	4
0053	A701289P1	RING RETAINING	3
0054	J708113P1	PIN	2
0055	J708282P1	BUSH	1
0056	A700031P635	SCREW PAN HD M4.0 X 35.0 MM	1
0058	J706617P2	SPACER	1
0061	J708098P7	CLAMP	1
0062	J708072P1	CONN COAX UHF	1
0063	A700031P606	SCREW PAN HD M4.0 X 6.0 MM	4
0064	J707099P512	SCREW	2
0065	J708129P224	SCREW	2
0066	J708129P221	SCREW	6
0067	J706212P202	SCREW PAN HD SZ 4.0 X 6.4 MM	4
0068	J708109P1	NUT	1
0069	A701507P808	SCREW PAN HD SZ4.2X12.7AB	3
0070	J708024P1	BMPR	4
0071	J708176P2	SCREW	4
0075	J706449P1	NAME PLATE COMB	1
0077	K805456P1	COVER BATTERY	1
0080	J708178P4	SCREW	4
0081	A701312P6	WASH	4
0084	J708275P1	INSTRUCTION OPR 900U	1
A019 :	M905688G4 :	CONTROL UNIT F AND S :	
A001	M905165G3	ASM MAIN BOARD , 2.ND VERSION	1
A002	L855197G1	ASM DIS BD SC92/3P0X	1
A004	L855177G6	ASM KEY BD SC92/3P0X, 5 X 2	1
A005	L855497G2	AC 902	1
A006	L855176G1	ASM KEY BD SC92/3P0X = SF-S	1
C001	A700007P41	CAP CER NPO 39P 5% 50V	1
C002	A700007P41	CAP CER NPO 39P 5% 50V	1
C003	A700007P41	CAP CER NPO 39P 5% 50V	1
C004	A700007P41	CAP CER NPO 39P 5% 50V	1

CIRCUIT POSITION	COMPONENT ITEM NUMBER	COMPONENT DESCRIPTION	QUANTITY TOTAL
C005	A700007P41	CAP CER NPO 39P 5% 50V	1
C006	A700007P41	CAP CER NPO 39P 5% 50V	1
C007	A700007P41	CAP CER NPO 39P 5% 50V	1
C008	A700007P41	CAP CER NPO 39P 5% 50V	1
C009	A700007P41	CAP CER NPO 39P 5% 50V	1
C010	A700007P41	CAP CER NPO 39P 5% 50V	1
0003	J707712P4 *	LS PERM MAG, 3 OHMS, 3W	1
0004	J708078P1	HOLDER LOADSPEAKER	1
0005	J708077P1	GRILL LS	1
0006	L855492G1	EXTRUSION MACHINED	1
0008	J706427P2	PAPER	1
0009	K805145G1	ASM DIS SCRN CB 90X	1
0010	J706594P1	EARPHO	1
0011	K805465G1	CABLE ASM	1
0012	J708178P1	SCREW PAN HD M3.0 X 5 MM	4
0013	J708105P1	SCREEN	1
0014	K805451P1	COVER	1
0015	J706629G1	ASM CA MT903	1
0016	K805472G1	SHIELD	1
0017	K805473G1	SHIELD	1
0018	J708122P1	SPRING	2
0020	J706076P3	WASHER SPG 2.0 X 4.9 MM	6
0021	A700031P205	SCREW PAN HD M2.0 X 5.0 MM	6
0022	A700133P17	WIRE 0,500 DIA	
0023	J706997P2	TAPE PYES WDH 9.53	
0024	A701278P12	SLEEVING	

Storno

CHAPTER
CHAPITRE
KAPITEL

10

Storno

Storno

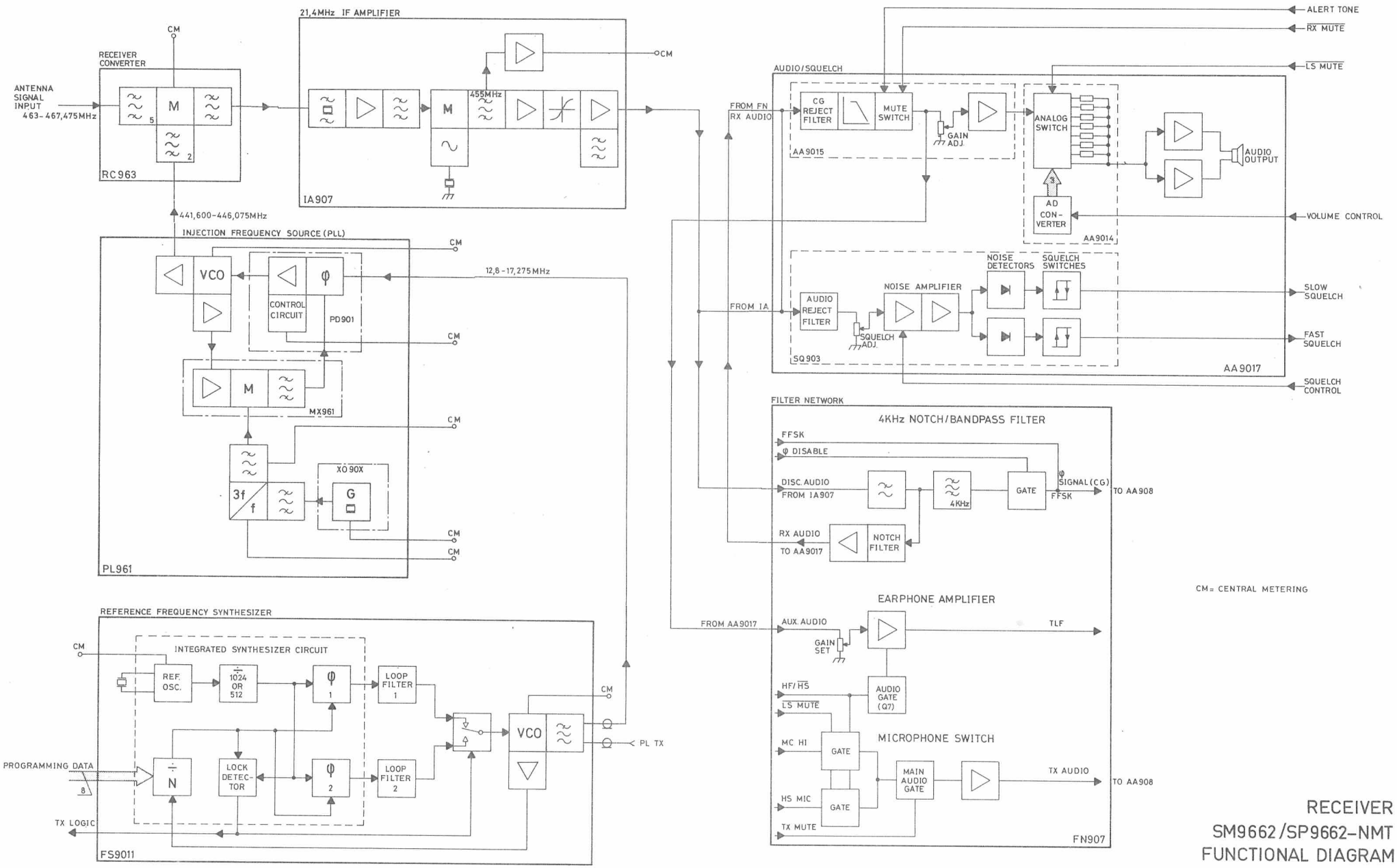

CM= CENTRAL METERING

RECEIVER SM9662/SP9662-NMT FUNCTIONAL DIAGRAM

D403.732/2

Storno

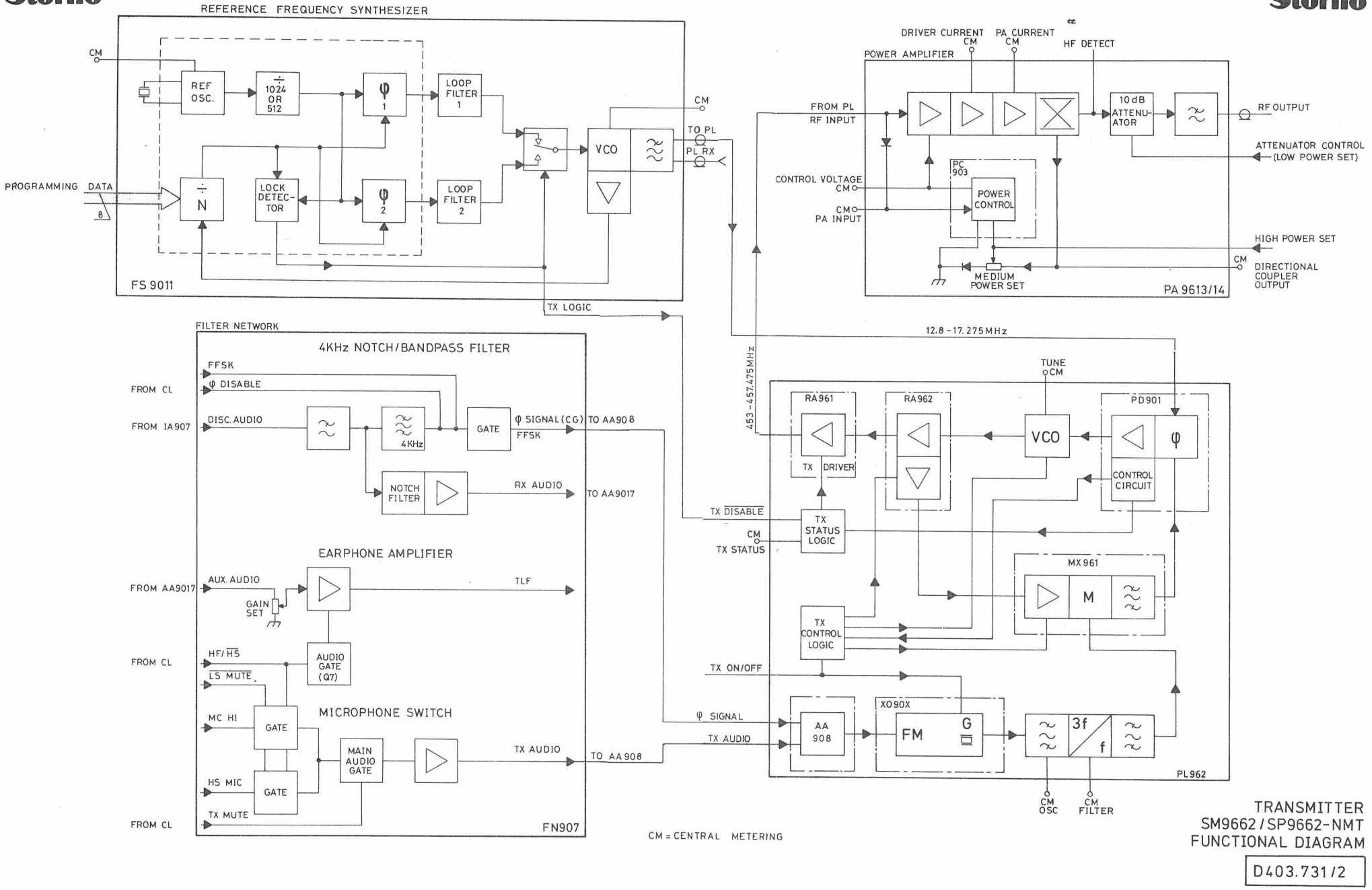

Storno

TRANSMITTER
SM9662 / SP9662-NMT
FUNCTIONAL DIAGRAM

D403.731/2

Storno

Storno

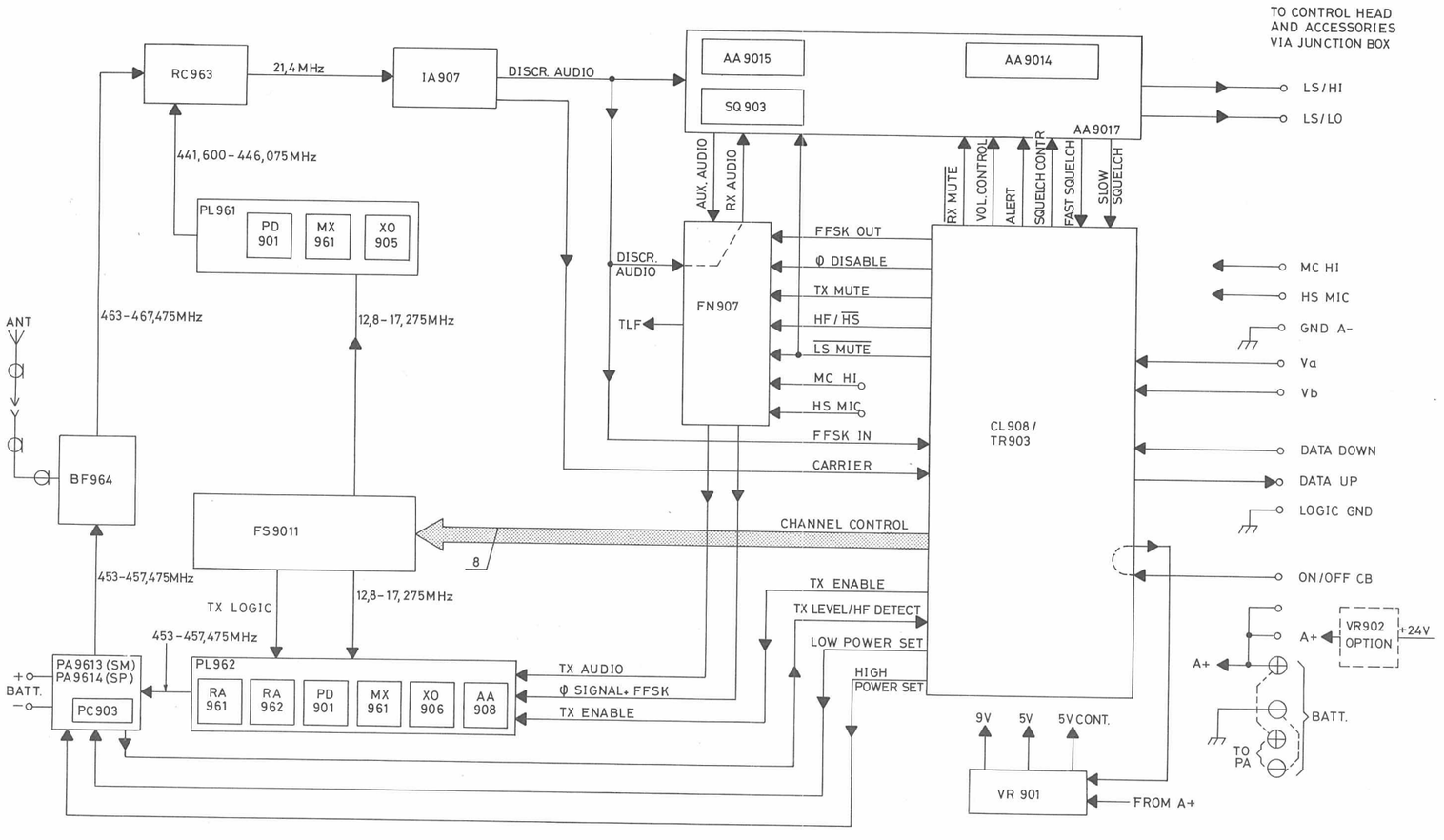

BLOCK DIAGRAM
SM9662/SP9662-NMT

D403.733/2

Storno

Storno

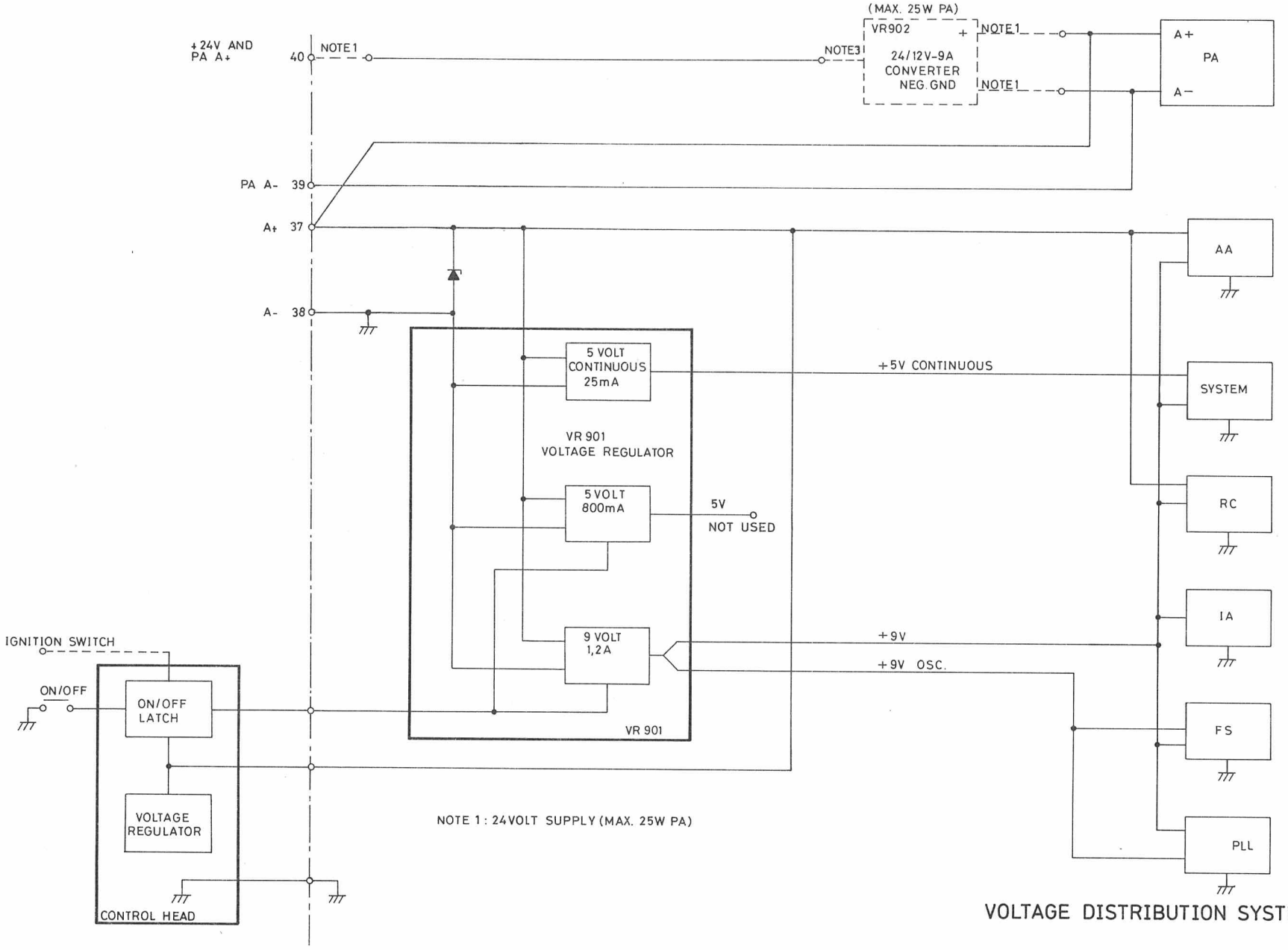

NOTE 1 : 24VOLT SUPPLY (MAX. 25W PA)

VOLTAGE DISTRIBUTION SYSTEM SM9662D025AP

D403.740

Storno

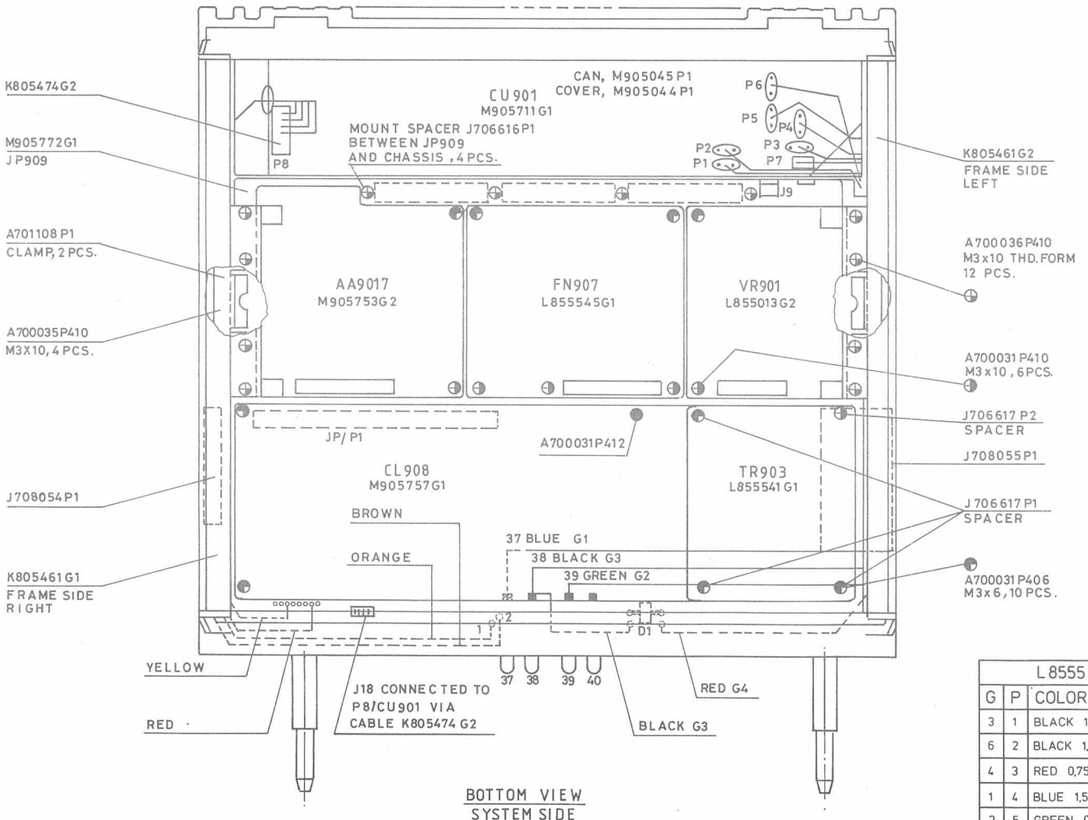

BOTTOM VIEW
SYSTEM SIDE

L855518			
G	P	COLOR □	PIN.
3	1	BLACK 1,5□	38
6	2	BLACK 1,5□	FUSE - BATTERY
4	3	RED 0,75□	D1 CATODE
1	4	BLUE 1,5□	37
2	5	GREEN 0,75□	39
5	6	RED 1,5□	BATTERY +

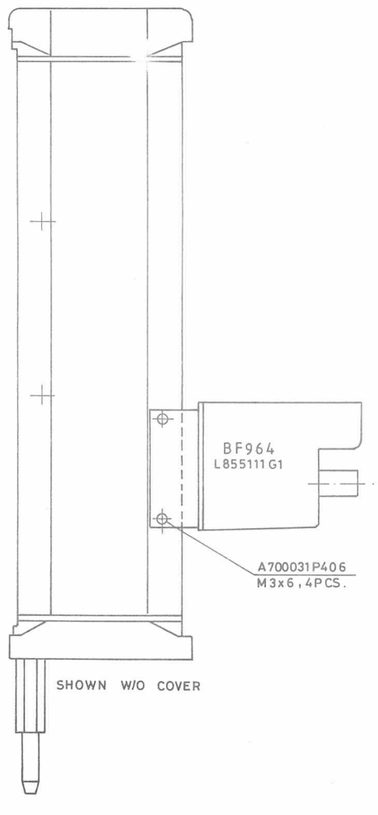

SHOWN W/O COVER

STORNOMATIC 900U
SYSTEM SIDE ASSEMBLY

M405.130

Storno

Storno

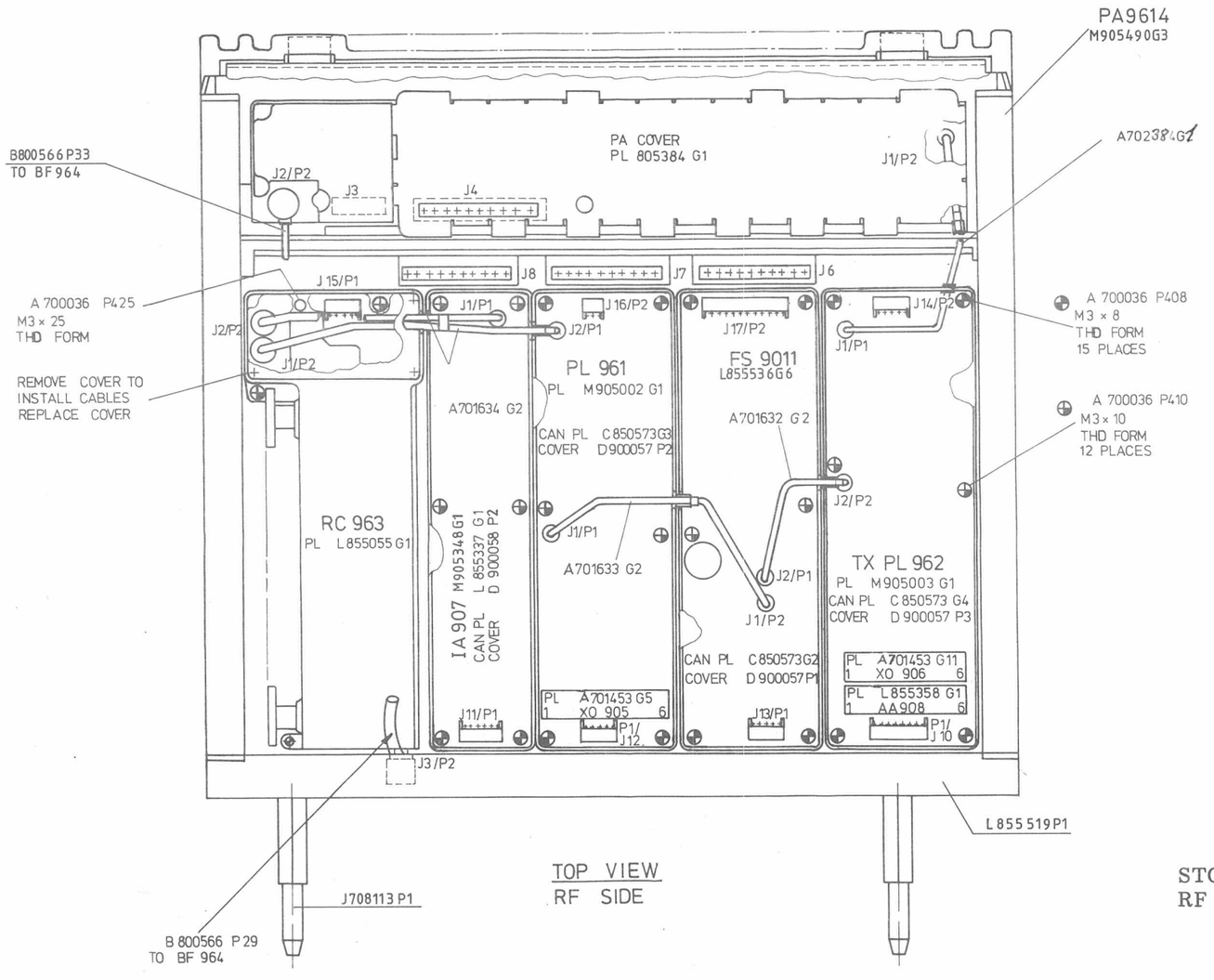

TOP VIEW
RF SIDE

STORNOMATIC 900U
RF SIDE ASSEMBLY

M405.129

Storno

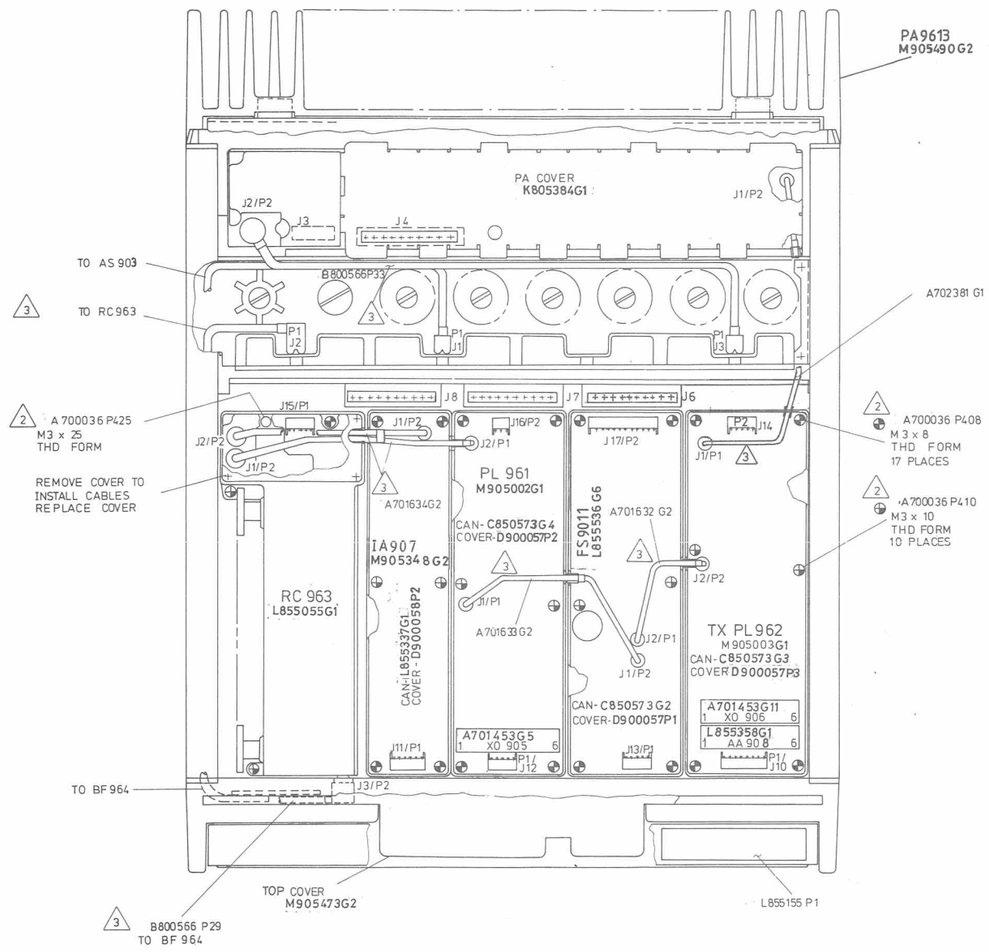

NOTES:

2 Part of hardware kit/part list J706615 G1

3 Part of RF cable kit/part list A701273 G1

RADIO ASSEMBLY NMT
RF SIDE

M405.132

Storno

Storno

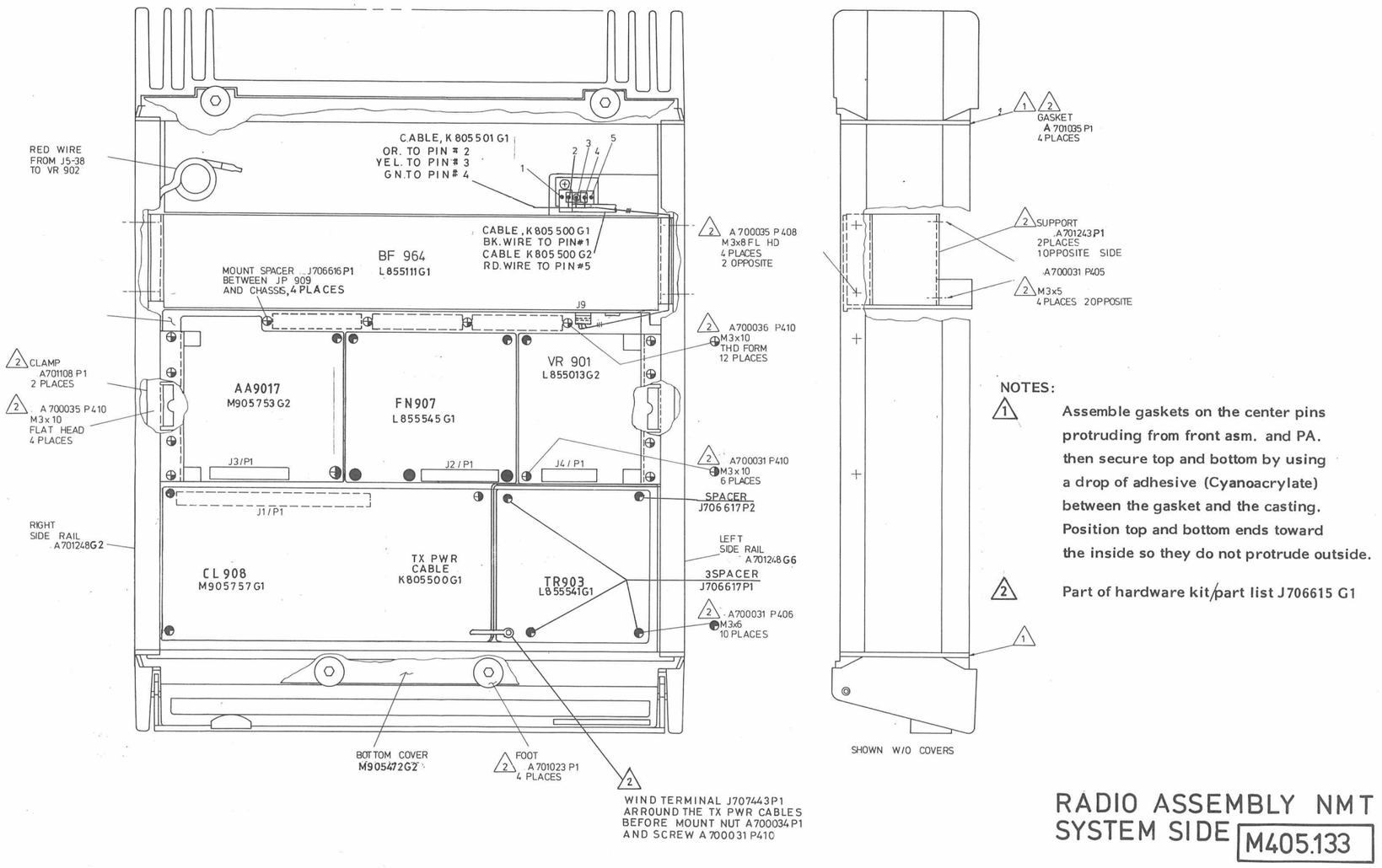

NOTES:

1. Assemble gaskets on the center pins protruding from front asm. and PA. then secure top and bottom by using a drop of adhesive (Cyanoacrylate) between the gasket and the casting. Position top and bottom ends toward the inside so they do not protrude outside.

2. Part of hardware kit/part list J706615 G1

RADIO ASSEMBLY NMT SYSTEM SIDE M405.133

Storno

Storno

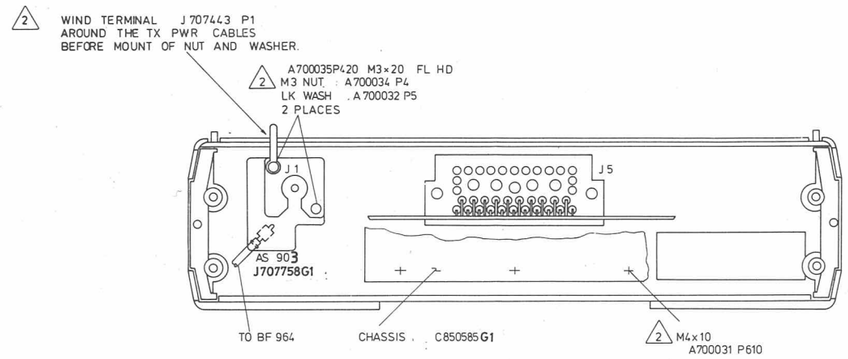

VIEW "D"

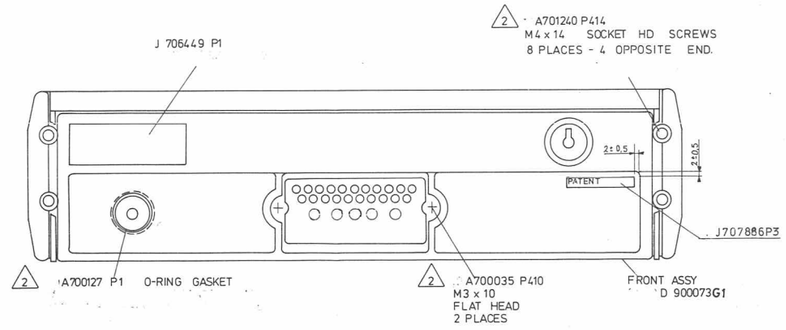

FRONT VIEW

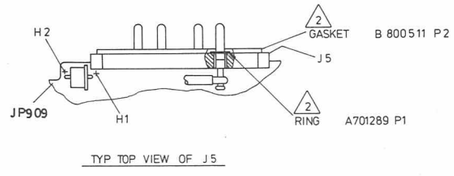

TYP TOP VIEW OF J5

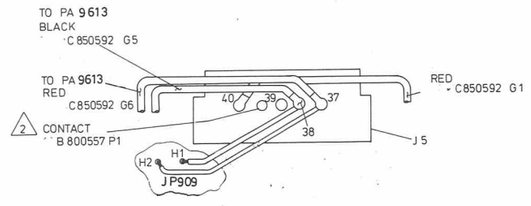

CONNECTION VIEW OF J5

2 **Part of hardware kit/part list J706615 G1**

FRONT ASSEMBLY NMT

M405.134

Storno

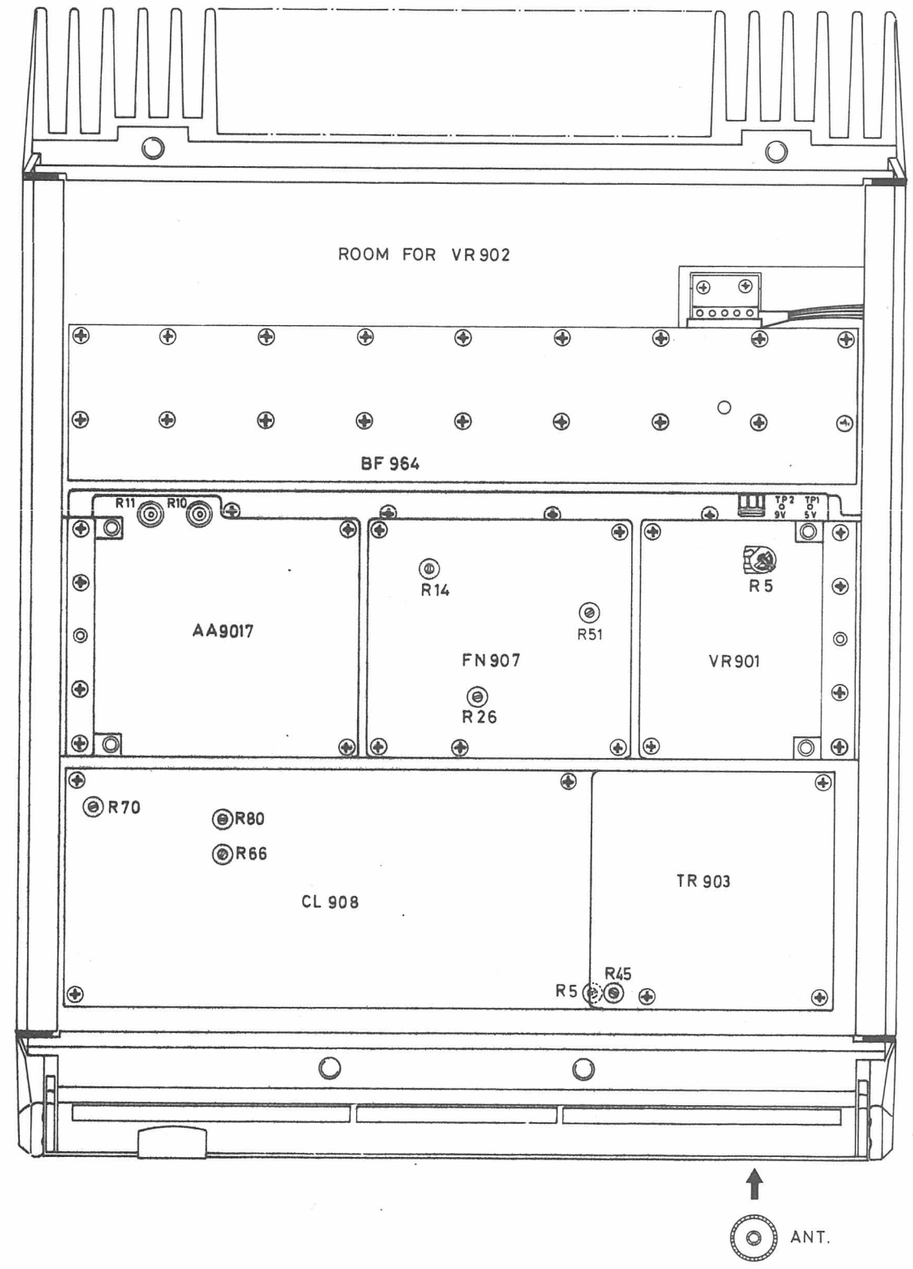

ADJUSTABLE COMPONENTS AND MODULE LAYOUT
SYSTEM SIDE STORNOMATIC 900 NMT

D403.719/2

Storno

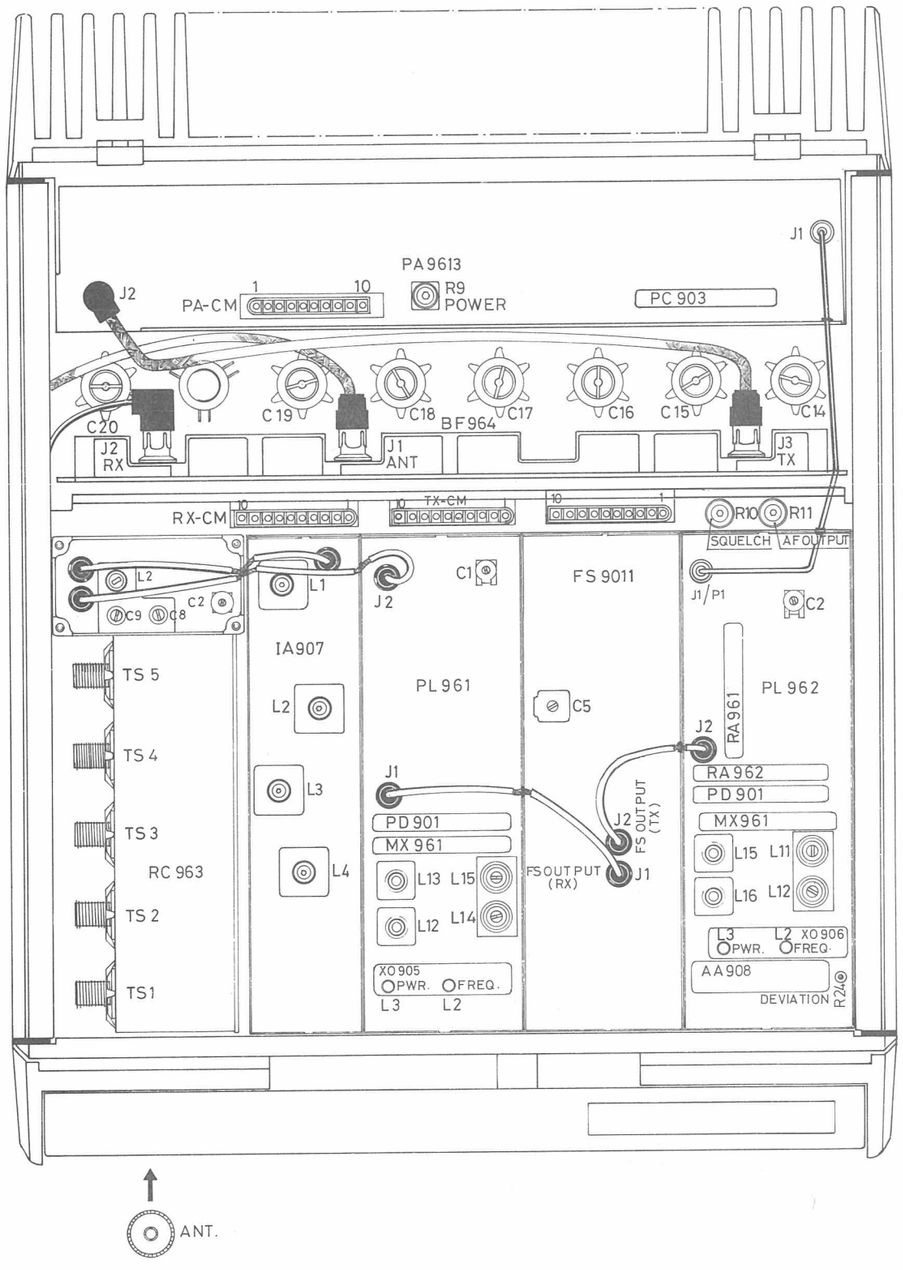

ADJUSTABLE COMPONENTS AND CENTRAL METERING
RF - SIDE

STORNOMATIC 900 NMT

D403.718

PARTLIST AND DIAGRAM ABBREVIATION

ABBREV.	DESCRIPTION	ABBREV.	DESCRIPTION
A	Ampere	DIO	Diode
AC	Alternating Current	DIPLX	Diplexer
ADPT	Adaptor	DIS	Display
AF	Audio Frequency	DISCR	Discriminator
ALIGN	Adjust, -able, -ment	DISTR	Distributor, -ion
ALK	Alkaline	DLY	Delay
AM	Ammeter	DPLX	Duplex, -er
AMPL	Amplifier	EARPHO	Earphone
ANALZ	Analyzer	ELEC	Electrolytic
ANT	Antenna	ENCO	Encoder
ARRS	Arrester	EQ	Equalizer
ASM	Assembly	EXC	Exciter
ATTEN	Attenuater, -tion	EYLT	Eyelet
AXFMR	Audio transformer	FD THRU	Feed Through
BAL	Balance, -d, -ing	FERR	Ferrite, -ous
BILAT	Bilateral	FIX	Fixed
BKR	Breaker	FLD EFF	Field Effect
BLO	Blower	FM	Frequency Modulation
BLOK	Block, -ing	FR	Frame
BP	Bandpass	FR END	Front End
BR	Branching	FREQ	Frequency
BRDG	Bridge, -d, ing	FZ	Fuse, -ed
BRDG-T	Bridged-T	FZBOX	Fuse Box
BSTOP	Bandstop	GD	Guard
BTRY	Battery	GE	Germanium
BUFR	Buffer	GEN	Generator
BUTN	Button	GR	Group
BUZ	Buzzer	GRD	Ground, -ing
C	Carbon	GRL	Grill
CA	Cable	HAR	Harmonic
CAB	Cabinet	HB	High Band
CAP	Capacitor, -ive	HDW	Hardware
CER	Ceramic	HEL	Helical
CG	Channel Guard	HGR	Hanger
CHAN	Channel	HLR	Holder
CHAS	Chassis	HN	Horn
CHGR	Charger	HNDSET	Handset
CKT	Circuit	HP	High Pass
CLP	Clamp	HSET	Headset
CND	Conduit	HSG	Housing
COAX	Coaxial	HT SK	Heat Sink
COMP	Compensate	IF	Intermediate-Frequency
COMPTR	Comparator	INP	Input
COND	Conductor, -ire	INSR	Insert
CONN	Connector	INST	Instruction
CONT	Contact	INST	Instrument
CONV	Conversion, -ter	INSTL	Installation
CPLR	Coupler, -ing	INVTR	Inverter
CTG	Cartridge	ISO	Isolator
CTR	Counter	JCTBOX	Junction Box
CURR	Current	JMPR	Jumper
DC	Direct Current	kHz	Kilohertz
DEM	Demodulator	LAM	Laminated
DEPOS	Deposited	LB	Low Band
DET	Detector	LIN	Linear
DEV	Device	LK	Link
DIEL	Dielectric	LMP	Lamp
DIG	Digital	LMTR	Limiter

Storno

PARTLIST AND DIAGRAM ABBREVIATION

ABBREV.	DESCRIPTION	ABBREV.	DESCRIPTION
LOG	Logic	SHLD	Shield, -ed, -ing
LS	Loudspeaker	SHT	Shorting
LT	Light	SI	Silicon
LTH	Latch	SM	Small
MEMY	Memory	SMLTR	Simulator
MIKE	Microphone	SOC	Socket
MISC	Miscellaneous	SPC	Spacer
MIX	Mixer	SPG	Spring
MO	Modem	SPKR	Speaker
MOB	Mobile	SPR	Spare
MOD	Modulator	SPT	Bracket
MODF	Modification, -er	SPT	Support
MON	Monitor	SQL	Squelch
MOS	Metal Oxide Semi Conductor	SR	Slow Release
MOT	Motor	STD	Standard
MTCH	Matching	STR	Starter
MTG	Mounting	SUPP	Supply
MTR	Meter	SUPPR	Suppressor
MULTMRT	Multimeter	SYS	System
MUX	Multiplex, -er	TA	Tantalum
MYL	Mylar	TD	Tune Delay
NB	Normal Blow	TEL	Telephone
NET	Network	TEST PT	Test Point
PA	Power Amplifier	TFL	Teflon
PB	Push Button	TGL	Toggle
PLG	Plug	THERMO	Thermostat
PNL	Panel	THERMSTR	Thermistor
POLYC	Polycarbonate	THK FILM	Thick Film
PORT	Portable	TIMR	Timer
PREAMP	Preamplifier	TNSLR	Translator
PREC	Precision	TRIG	Trigger
PROG	Program, -mable	TRM	Trim, -mer
PUL	Pulse	TSTR	Transistor
PW	Printed Wire	TYITR	Thyristor
PWB	Printed Wiring Board	UN	Unit
PYES	Polyester	UNIJCT	Unijunction
PYST	Polystyrene	VAR	Variable
QB	Quick Blow	VAR	Varactor
QTZ	Quarz	VENTLR	Ventilator
RC	Remote Control	VIBR	Vibrator
RCVR	Receiver	VLTG	Voltage
REAC	Reactor	VM	Voltmeter
RECHGR	Rechargeable	VR	Voltage regulator
RECTF	Rectifier	W	Watt
REG	Regulate, -d, or	WASH	Washer
REL	Relay	WB	Wide Band
REP	Repeater	WIND	Winding
RES	Resistor	WM	Wattmeter
RF	Radio Frequency	WW	Wire Wound
RHEO	Rheostat	XFMR	Transformer
ROT	Rotary	XMIT	Transmit
SAF	Safety	XMSN	Transmission
SB	Slow Blow	XMTR	Transmitter
SBSTRT	Substrate	XTAL	Crystal
SEL	Select, -or, -ion	ZENR	Zener
SEPR	Separator	ZN	Zinc
SEQ	Sequential		
SH	Shunt		