CHAPTER 5
PROGRAMMING

- GENERAL PROGRAMMING DESCRIPTION
- CONVERSION TABLES
- PROGRAMMING THE PERSONALITY PROM
- PROGRAMMING 2 CHANNELS VERSION
- PROGRAMMING 10 CHANNELS VERSION
- CHANNEL FREQUENCY PROGRAMMING
- PROGRAMMING 10 CHANNELS VERSION WITH TONE SIGNALLING
- MEMORY MAPPING
- WORKSHEETS

GENERAL PROGRAMMING DESCRIPTION

MEMORY DEVICES

Storno radiotelephones with microcomputer control logic use memory devices which are programmed for each specific radio with the customer data such as channel frequencies, tone signalling system, tone format, tone tables and optional software functions. Memory devices containing these data are referred to as Personality PROMS. Two types of PROMS (Programmable Read Only Memory) are used, fusible link PROMS and erasable PROMS. Both types are electrically programmed by means of programming equipment.

BITS AND BYTES AND NIBBLES

A memory device is arranged as an array of elements each capable of containing one BIT of information. Each bit can be either logic 0 or 1. The bits are arranged in a matrix network of rows and columns.
All rows have numbers which are referred to as addresses and define the memory location of a data word.
The columns form the data words and are referred to as BYTES. Each byte can be divided into two NIBBLES each consisting of four bits.

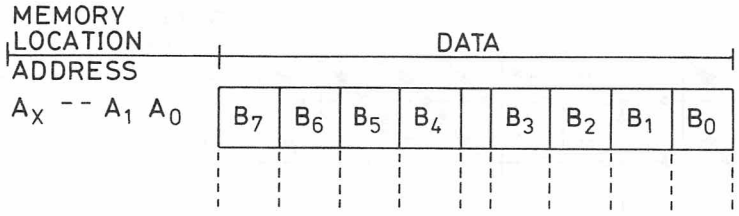

FIG.1

B_x = Bit_x

B_0 - B_7 = 1. Byte

B_0 - B_3 = Low nibble
B_4 - B_7 = High nibble

A_0 - A_x = Address

THE HEXADECIMAL CODE

Binary numbers containing many bits are difficult to handle and are therefore often converted to hexadecimal code, abbreviated HEX.
The code is formed on a base of 16 and consists of sixteen different symbols.

HEX SYMBOL	BINARY CODE	DECIMAL VALUE
0	0000	0
1	0001	1
2	0010	2
3	0011	3
4	0100	4
5	0101	5
6	0110	6
7	0111	7
8	1000	8
9	1001	9
A	1010	10
B	1011	11
C	1100	12
D	1101	13
E	1110	14
F	1111	15

Converting a binary number to hexcode is accomplished by splitting a byte in groups each with four bits and then substitute the equivalent HEX digit for each group. To avoid ambiguity when dealing with different number systems all hexadecimal numbers will be followed by H, e.g. 10 H, decimal numbers will be followed by a decimal point, e.g. 10., and binary numbers have no special notation, e.g. 10 or 1011.

FUSIBLE LINK PROMS

Fusible link PROMS are diode arrays which are programmed by sending a current pulse through each link that should not be used. The current pulse blows the link and the bit is permanently programmed to either a logic 0 or logic 1. When the memory location is addressed the bit pattern can be read off the output pins.

The memory contents of a fusible link PROM is permanent when it once has been programmed and cannot be altered later.

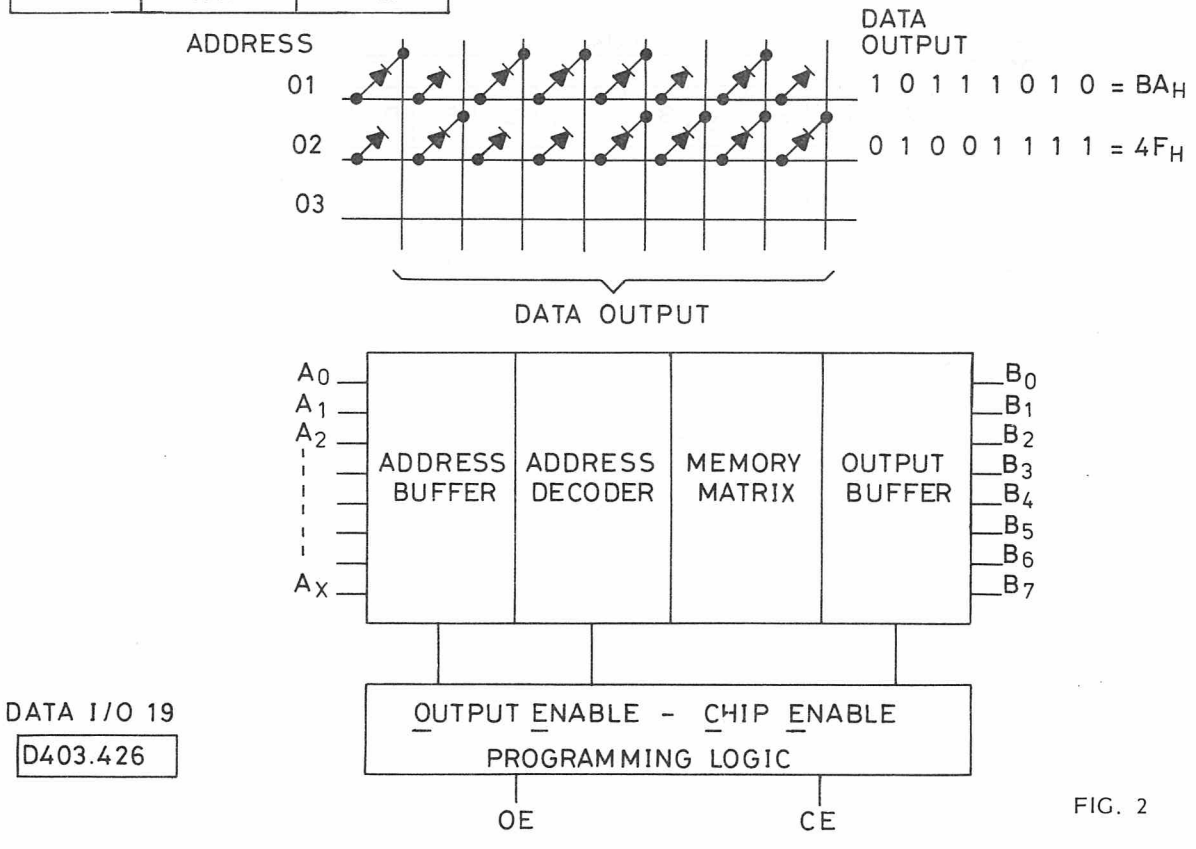

DATA I/O 19
D403.426

FIG. 2

ERASEABLE PROMS

Eraseable PROMS can be reprogrammed when the contents of the memory has been erased. Each memory location consists of a MOS-transistor (MOS-FET) with a floating gate which is charged during programming if the bit has to be programmed.
The PROM contents can be erased by exposing the chip to ultra-violet light for a certain period for which reason the package has a glass window at the top. When a device is programmed the window must be covered by a nontransparent piece of tape to avoid unintentional erasure.
The erasure time depends on the type of eraser and where the prom is placed with respect to the UV-source. The middle of the UV-tube is radiating more light than near its inds. Also the aging of the tube must be taken into consideration.
When a prom has been through the erasing procedure it should be checked for complete erasure by loading its contents into the programmer and compase its sumcheck value to that of a fresh prom of the same type to asertain that the erasure has been successful.

HANDLING OF PROMS

MOS memory devices are sensitive to static electricity and incorrect insertion in sockets. The following precautions should be observed when handling MOS devices:

1. Ensure you are statically discharged before touching the component, for instance by rubbing your hands on conductive material.

2. Ensure that measuring instruments and soldering equipment are properly connected to earth before testing or servicing equipment containing MOS circuits.

3. Avoid touching the pins of MOS devices.

4. Avoid pin contact with any material likely to be static charged, e.g. nylon clothing.

5. Mount MOS devices on conductive foam if they have to be transported outside their natural environment.

6. Ensure proper insertion and orientation of socket mounted devices.

PROM PROGRAMMING EQUIPMENT

Storno radiotelephones with microcomputer control logic which utilize fusible link PROMs or EPROMs have to be programmed with the software data. Storno recommends DATA I/O SYSTEM 19 be used for this purpose.
If another type of equipment is used it must be approved both by Storno and the PROM manufacturer.

DATA I/O SYSTEM 19 consists of:
- a Programmer
- a Programming Pak, interchangeable
- a Socket adaptor or universal programming pack.

DATA I/O UNIPAK is adaptable for more than 200 types of PROM devices.

INTERFACING

The programmer may be interfaced to a microcomputer TYPE ABC80 with a display unit, a printer, and a storage facility, e.g. tape recorder. The interface used is the V24 standard.

Data read out from a prom can then be transfered to the microcomputer and viewed on the display or printed out.
A software program can be used to calculate data which are transferred to the Data I/O RAM and then programmed into the PROM device.

DATA I/O SOFTWARE DESCRIPTION

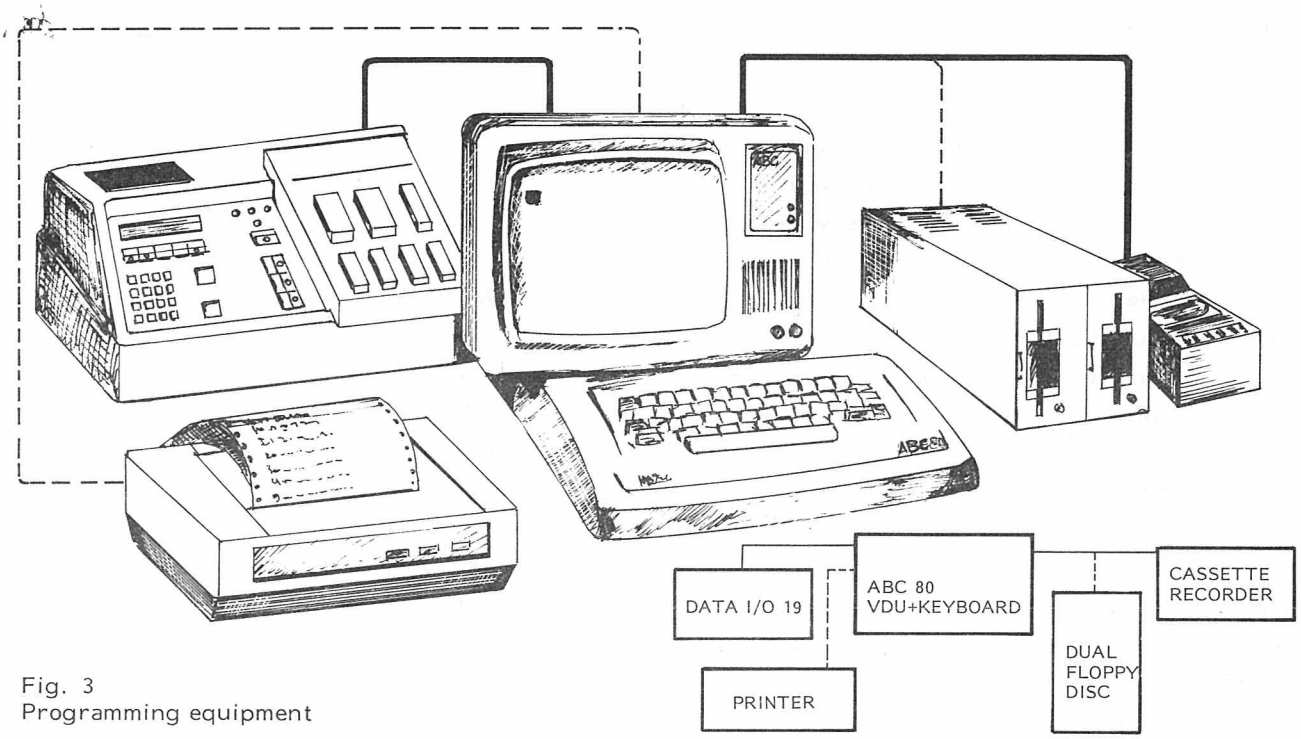

Fig. 3
Programming equipment

The DATA I/O 19 system has the following basic functions:

EDIT FUNCTION

The DATA I/O SYSTEM 19 contains an editor enabling the user to edit data stored in the RAM.

Data can be deleted, altered or inserted on each address using the edit function.

VERIFY FUNCTION

Data stored in the programmers RAM can be compared to the contents of a prom using the verify function.

LOAD FUNCTION

Data contained in a prom can be loaded into the RAM using the load function.

PROGRAM FUNCTION

When the data stored in the RAM have been edited or loaded either from the keyboard or from a master prom the program function is used to program a new prom.

Operating instructions for the programmer are supplied by the vendor.

COMPARE FUNCTION

Input data on the serial port can be compared with the RAM contents.

INPUT OPERATION

Data can be transfered from the serial port to the RAM using the INPUT operation.

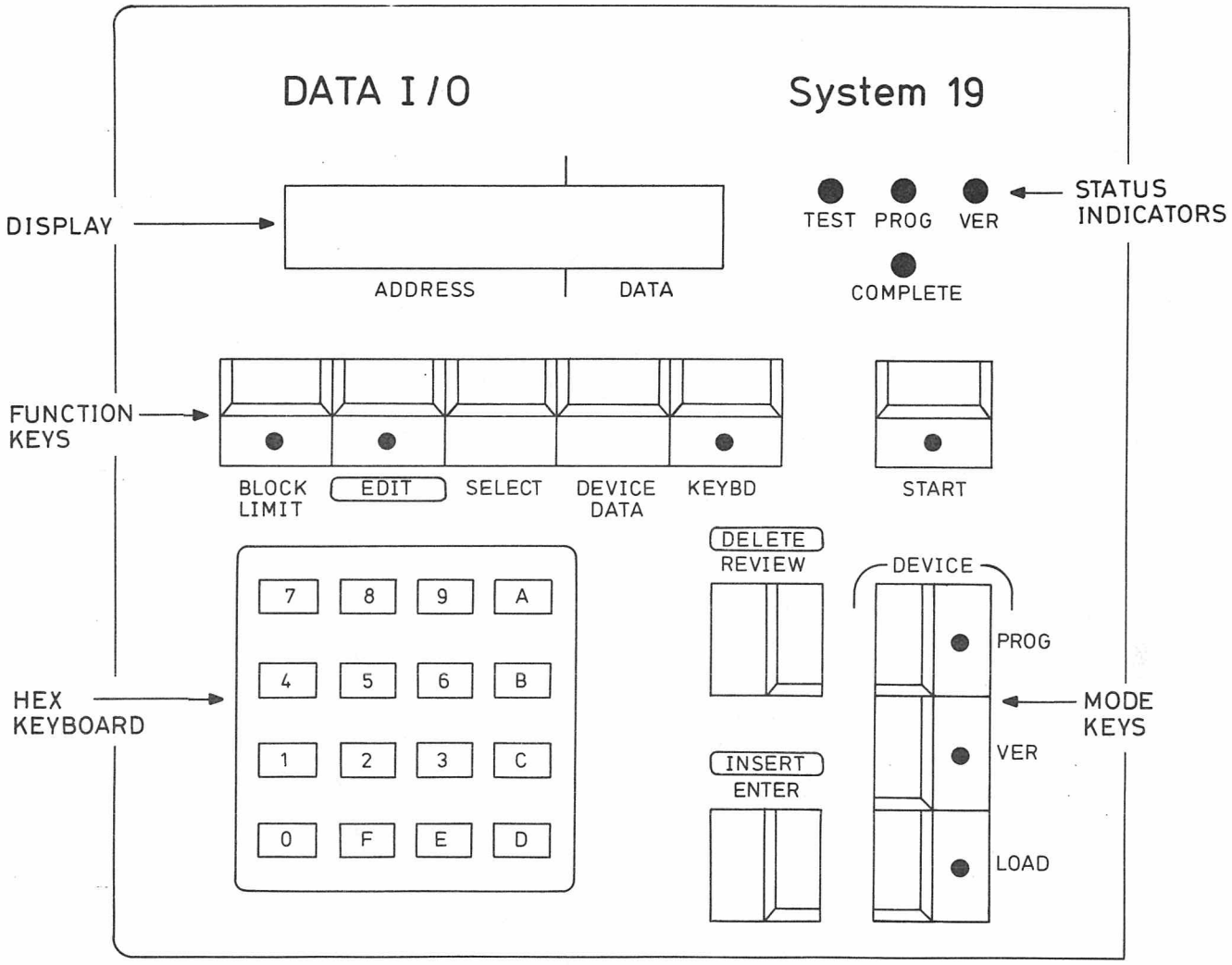

DATA I/O 19
FRONT PANEL
D403.427

FIG.4

OUTPUT OPERATION

Data can be transfered from the RAM to the serial port using the output function.

The DATA I/O SYSTEM 19 standard mainframe includes 4 Kbyte RAM, hexadecimal keyboard, hexadecimal address and data display, serial IN/OUt port (RS232 and 20 mA) V24, ASCIL-Hex space format, software for self-test, device and operation check and sum-check calculations.

ABC80 MICROCOMPUTER

The ABC80 microcomputer consists of the following:

- a Video Display Unit
- a Keyboard and CPU unit with 32 Kbytes RAM
- a Storage unit, Floppy disc or Cassette

and optional a printer.

For further details refer to the ABC80 manual.

ABC80 - DATA I/O 19 INTERFACE

The ABC80 and DATA I/O 19 both have V24 ports for interfacing external units and hence are linked with a simple cable. The diagram below shows the input/output details:

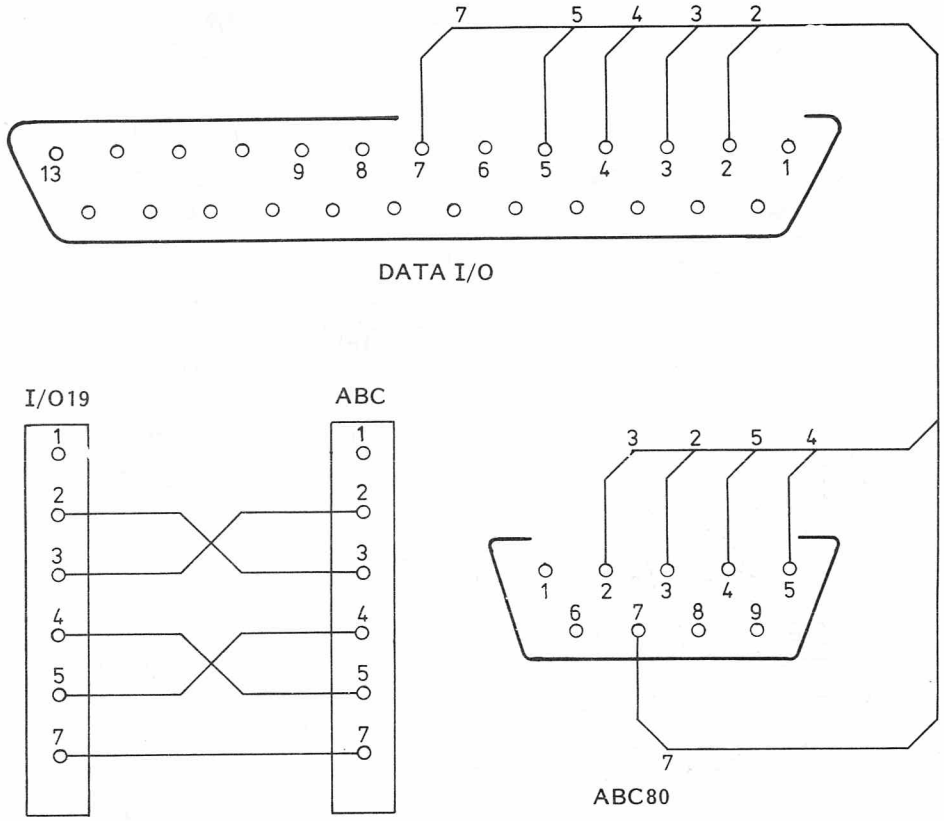

PIN ASSIGNMENT

1:
2: SEND DATA (TXD)
3: RECEIVE DATA (RXD)
4: REQUEST TO SEND (RTS)
5: CLEAR TO SEND (CTS)
7: SIGNAL GROUND

Fig. 5.
Interface cable

BAUD RATE SELECTOR
SET TO 10 = 2400 BAUD

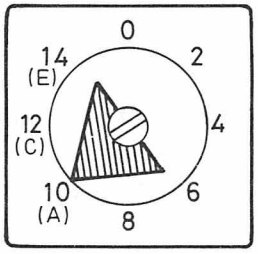

0	: 50	9	: 2000
1	: 75	10	: 2400 ◀
2	: 110	11	: 3600
3	: 134,5	12	: 4800
4	: 150	13	: 7200
5	: 300	14	: 9600
6	: 600	15	: 19200
7	: 1200		
8	: 1800		

Fig. 6.
Baud Rate Selector

Data transmit speed is 2400 Baud to which the Baud rate selector on the rear of the DATA I/O shall be set (position 10).
The data transmit format is 1 start bit + 7 data bits + 2 stop bit and no parity bit.

The format selector should be set as follows:

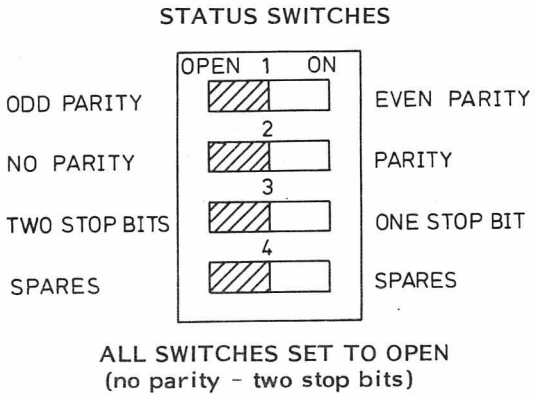

Fig. 7.
Status switches

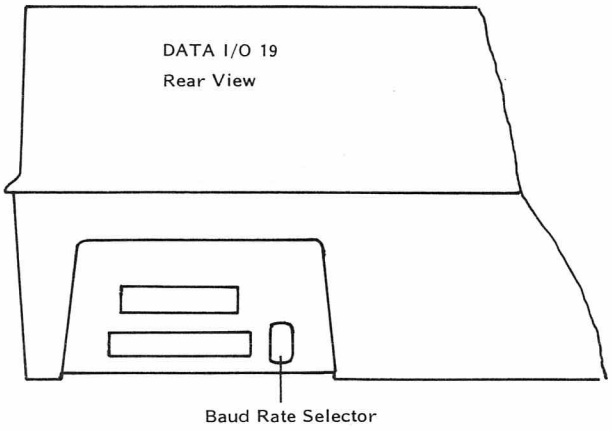

Fig. 8.
Data I/O Rear

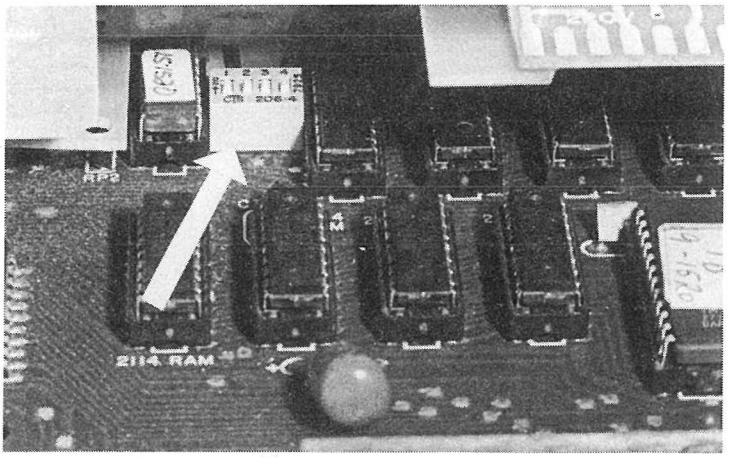

Fig. 9.
Data I/O Status switches

SOFTWARE PACKAGES

Storno software packages for programming of memory devices, proms, are delivered either on recording cassettes or floppy discs. The program has been write and list protected and cannot be lost except when exposed to a strong magnetic field or heat. Ordinary precautions for handling these devices should be observed, dust, fingerprints, etc.

When the program is loaded into the computer's ram it is automatically executed.

The procedure is as follows:

Turn the equipment on.
Load the cassette or floppy disc unit.
Run the program.

The program is a dialoque with the machine displaying questions on the VDU to which the operator enters his answers on the keyboard. Answers should be typed exactly as specified on the screen.

When the program is finished the calculated data can be transfered to DATA I/O using the software program TRANSFER. Instructions displayed on the screen should be followed strictly.

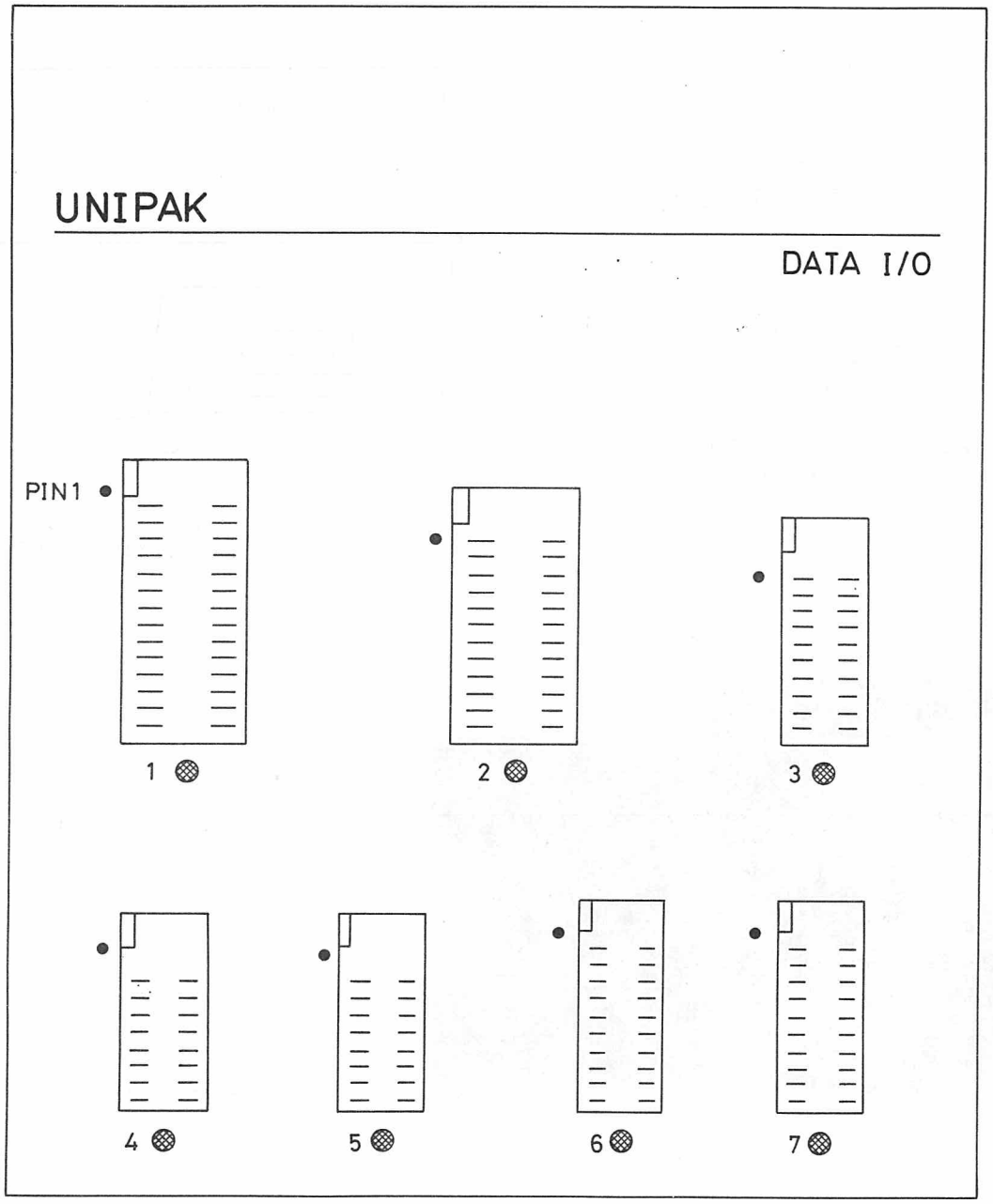

FIG. 10.

DATA I/O 19
UNIPAK
D403.425

OPERATING INSTRUCTIONS

DATA TRANSFER ABC80 TO DATA I/O

When data transfer is requested answer yes and the transfer menu is displayed on the screen.

Menu:

SEND.....	S
REC.....	R
PRINT.....	P
READ DATA (CAS)...	E
STORE DATA (CAS)..	ü

Type R and follow the instructions on the screen; after each entry on the ABC hit the ENTER KEY.

Example:
Data have been calculated and stored by the ABC80.
Type R - ENTER
ON DATA I/O:
Press SELECT
Key in D1
Press ENTER
Press START

When the COMPLETE indicator comes on the procedure has been successful.
To program a device proceed as follows:
Press PROGRAM ; an F will show on the display along with the previous pin code or with the rest of the of the digits blanked.
Key in device family code; the DATA I/O response is a displayed P.
Key in pin code; the DATA I/O response is a socket indicator being on.
Insert the device in the socket.
Press START
When the COMPLETE indicator comes on the procedure has been succesful.

DATA TRANSFER DATA I/O TO ABC80

The data transfer program is used to send data from the programmers RAM to ABC and, optionally, to a printer. First the prom divice data must be loaded into the RAM and then transfered.

Example:
A prom's data is wanted to be viewed on the ABC80 screen.
ON DATA I/O:
Press LOAD ; an F will show on the display along with the previous pin code or with the rest of the digits blanked.
Key in device family code; the DATA I/O response is a socket indicator being on.
Insert prom device in the socket.
Press START

When the COMPLETE indicator comes on the prom data have been successfully loaded into the RAM. On ABC80 answer YES to data transfer and the transfer menu is displayed.

Type R - ENTER

ON DATA I/O:
Press SELECT
Key in D5
Press ENTER
Press START

When the COMPLETE indicator comes on the data have been successfully transmitted to the ABC80.

DATA I/O SYSTEM 19 OPERATING

Notes on handling the equipment:

- to retain data in the programmer RAM, programming paks and socket adaptors may be exchanged with power ON.

- do not switch power or exchange packs with a device in the socket.

- do not insert or remove a device while the START LIGHT is on.

Notes on key operations

- press the function key to clear a miskeyed value.

- press KEYBD to reset the programmer.

- refer to the system 19 manual for complete information on all operations.

LOAD, PROGRAM and VERIFY

Press LOAD, PROG or VER

Key in Family code (xx).
Key in Pinout code.
Insert device in socket where indicator is on.
Press START
Observe displayed sum-check when COMPLETE light comes ON.

KEYBOARD DATA ENTRY AND EDITING

All data and addresses shall be entered in hexa-decimal notation.

Change data:
Press KEYB
Key in address
Press ENTER
Key in data
Press ENTER
New data replaces old data which is lost.

Insert data:
Press KEYB
Key in address
Press ENTER
Press EDIT
Key in data
Press ENTER
Data at the displayed address and each higher address moves one location higher. Data that was at the highest absolute address is lost.

Delete data:
Press KEYB
Key in address
Press ENTER
Press EDIT
Press DELETE
Data at the selected address is lost. All data at each higher address move one location lower and the highest absolute RAM address clears to 0.

CONVERSION TABLE BINARY TO HEX

BINARY CODE				HEX CODE
0	0	0	0	0
0	0	0	1	1
0	0	1	0	2
0	0	1	1	3
0	1	0	0	4
0	1	0	1	5
0	1	1	0	6
0	1	1	1	7
1	0	0	0	8
1	0	0	1	9
1	0	1	0	A
1	0	1	1	B
1	1	0	0	C
1	1	0	1	D
1	1	1	0	E
1	1	1	1	F

TABLE 1.

HEX CODE CONVERSION TABLE

ADDRESS LSD / MSDs	DECIMAL TO HEX-CODE CONVERSION TABLE 0-511															
	0	1	2	3	4	5	6	7	8	9	A	B	C	D	E	F
00	00	01	02	03	04	05	06	07	08	09	10	11	12	13	14	15
01	16	17	18	19	20	21	22	23	24	25	26	27	28	29	30	31
02	32	33	34	35	36	37	38	39	40	41	42	43	44	45	46	47
03	48	49	50	51	52	53	54	55	56	57	58	59	60	61	62	63
04	64	65	66	67	68	69	70	71	72	73	74	75	76	77	78	79
05	80	81	82	83	84	85	86	87	88	89	90	91	92	93	94	95
06	96	97	98	99	100	101	102	103	104	105	106	107	108	109	110	111
07	112	113	114	115	116	117	118	119	120	121	122	123	124	125	126	127
08	128	129	130	131	132	133	134	135	136	137	138	139	140	141	142	143
09	144	145	146	147	148	149	150	151	152	153	154	155	156	157	158	159
0A	160	161	162	163	164	165	166	167	168	169	170	171	172	173	174	175
0B	176	177	178	179	180	181	182	183	184	185	186	187	188	189	190	191
0C	192	193	194	195	196	197	198	199	200	201	202	203	204	205	206	207
0D	208	209	210	211	212	213	214	215	216	217	218	219	220	221	222	223
0E	224	225	226	227	228	229	230	231	232	233	234	235	236	237	238	239
0F	240	241	242	243	244	245	246	247	248	249	250	251	252	253	254	255
10	256	257	258	259	260	261	262	263	264	265	266	267	268	269	270	271
11	272	273	274	275	276	277	278	279	280	281	282	283	284	285	286	287
12	288	289	290	291	292	293	294	295	296	297	298	299	300	301	302	303
13	304	305	306	307	308	309	310	311	312	313	314	315	316	317	318	319
14	320	321	322	323	324	325	326	327	328	329	330	331	332	333	334	335
15	336	337	338	339	340	341	342	343	344	345	346	347	348	349	350	351
16	352	353	354	355	356	357	358	359	360	361	362	363	364	365	366	367
17	368	369	370	371	372	373	374	375	376	377	378	379	380	381	382	383
18	384	385	386	387	388	389	390	391	392	393	394	395	396	397	398	399
19	400	401	402	403	404	405	406	407	408	409	410	411	412	413	414	415
1A	416	417	418	419	420	421	422	423	424	425	426	427	428	429	430	431
1B	432	433	434	435	436	437	438	439	440	441	442	443	444	445	446	447
1C	448	449	450	451	452	453	454	455	456	457	458	459	460	461	462	463
1D	464	465	466	467	468	469	470	471	472	473	474	475	476	477	478	479
1E	480	481	482	483	484	485	486	487	488	489	490	491	492	493	494	495
1F	496	497	498	499	500	501	502	503	504	505	506	507	508	509	510	511

HEX CODE CONVERSION TABLE

ADDRESS LSD / MSDs	DECIMAL TO HEX-CODE CONVERSION TABLE 512-1023															
	0	1	2	3	4	5	6	7	8	9	A	B	C	D	E	F
20	512	513	514	515	516	517	518	519	520	521	522	523	524	525	526	527
21	528	529	530	531	532	533	534	535	536	537	538	539	540	541	542	543
22	544	545	546	547	548	549	550	551	552	553	554	555	556	557	558	559
23	560	561	562	563	564	565	566	567	568	569	570	571	572	573	574	575
24	576	577	578	579	580	581	582	583	584	585	586	587	588	589	590	591
25	592	593	594	595	596	597	598	599	600	601	602	603	604	605	606	607
26	608	609	610	611	612	613	614	615	616	617	618	619	620	621	622	623
27	624	625	626	627	628	629	630	631	632	633	634	635	636	637	638	639
28	640	641	642	643	644	645	646	647	648	649	650	651	652	653	654	655
29	656	657	658	659	660	661	662	663	664	665	666	667	668	669	670	671
2A	672	673	674	675	676	677	678	679	680	681	682	683	684	685	686	687
2B	688	689	690	691	692	693	694	695	696	697	698	699	700	701	702	703
2C	704	705	706	707	708	709	710	711	712	713	714	715	716	717	718	719
2D	720	721	722	723	724	725	726	727	728	729	730	731	732	733	734	735
2E	736	737	738	739	740	741	742	743	744	745	746	747	748	749	750	751
2F	752	753	754	755	756	757	758	759	760	761	762	763	764	765	766	767
30	768	769	770	771	772	773	774	775	776	777	778	779	780	781	782	783
31	784	785	786	787	788	789	790	791	792	793	794	795	796	797	798	799
32	800	801	802	803	804	805	806	807	808	809	810	811	812	813	814	815
33	816	817	818	819	820	821	822	823	824	825	826	827	828	829	830	831
34	832	833	834	835	836	837	838	839	840	841	842	843	844	845	846	847
35	848	849	850	851	852	853	854	855	856	857	858	859	860	861	862	863
36	864	865	866	867	868	869	870	871	872	873	874	875	876	877	878	879
37	880	881	882	883	884	885	886	887	888	889	890	891	892	893	894	895
38	896	897	898	899	900	901	902	903	904	905	906	907	908	909	910	911
39	912	913	914	915	916	917	918	919	920	921	922	923	924	925	926	927
3A	928	929	930	931	932	933	934	935	936	937	938	939	940	941	942	943
3B	944	945	946	947	948	949	950	951	952	953	954	955	956	957	958	959
3C	960	961	962	963	964	965	966	967	968	969	970	971	972	973	974	975
3D	976	977	978	979	980	981	982	983	984	985	986	987	988	989	990	991
3E	992	993	994	995	996	997	998	999	000	001	002	003	004	005	006	007
3F	008	009	010	011	012	013	014	015	016	017	018	019	020	021	022	023

TABLE 1		TABLE 2		TABLE 3		TABLE 4	
DECIMAL	HEX	DECIMAL	HEX	DECIMAL	HEX	DECIMAL	HEX
4096	1000	256	0100	16	0010	1	0001
8192	2000	512	0200	32	0020	2	0002
12288	3000	768	0300	48	0030	3	0003
16384	4000	1024	0400	64	0040	4	0004
20480	5000	1280	0500	80	0050	5	0005
25576	6000	1536	0600	96	0060	6	0006
28672	7000	1792	0700	112	0070	7	0007
32768	8000	2048	0800	128	0080	8	0008
36864	9000	2304	0900	144	0090	9	0009
40960	A000	2560	0A00	160	00A0	10	000A
45056	B000	2816	0B00	176	00B0	11	000B
49152	C000	3072	0C00	192	00C0	12	000C
53248	D000	3328	0D00	208	00D0	13	000D
57344	E000	3584	0E00	224	00E0	14	000E
61440	F000	3840	0F00	240	00F0	15	000F

HEXADECIMAL - DECIMAL - CONVERSION 0 - 65535
0 - FFFF

Example: DEC TO HEX

DEC = 64888

```
_  64888
   61440    F000 (1)
_   3448  +
   3328     0D00 (2)
_    120  +
    112     0070 (3)
_      8  +
      8     0008 (4)
      0
```

Result: HEX = FD78

Example: HEX TO DEC

HEX = FD78

```
F000      61440 (1)
      +
0D00       3328 (2)
      +
0070        112 (3)
      +
0008          8 (4)
```

Result: DEC = 64888

Storno

PROGRAMMING THE PERSONALITY PROM

STORNOPHONE 4000

The personality PROM contains the data for channel frequencies and tones as specified by the customer. It also contains certain specific data pertaining to the radio options.
The personality PROM is a 256x4 bit device, STORNO part number J707417P1.
For programming the device STORNO recommends to use DATA I/O SYSTEM 19 or 22.

SOFTWARE NOMENCLATURE CQP4000 WITH STRUCTURED OPTION EA

	Function descriptor Main	Sub.	Function	Valid Function data	Default value	Remarks
ONLY FOR 2 CH. VERSION	TON		Tonesystem	ZV1/ZV2/ZV3/CCI/EEA/X	N	Demands structured option D- or CC
	PRE		Preambletime	From 0.3 sec. to 4.5 sec. in 0.3 sec. steps/X eg. PRE= 0.9	0.3	Preamble time equals time of prolonged 1st tone
	ENC		Encoder code	Tone code in accordance with tone table/X (next page) Max. 7 digits eg. ENC= 1,R,2V,4,3	N	ENC= N only if TON= N Selectable tones: 2V, 1V 2V= x10, 1V= x1 on keyboard
		DUR	Duration (Prolonged 1. tone)	Y/X	N	Duration= Preamble time if DUR= Y
		FOL	Following telegram	STF/X	N	
	STF		Second telegramformat	Tonecode in accordance with table/X	N	Selectable tones: 2V= x10, 1V= x1 on keyboard
	DEC		Decoder code	Tonecode in accordance with table/X	N	DEC= N only if TON= N or if CTCSS decoder selected.
	GRP		Group tone	ZVEI/CCIR: 885-970-2400-2800 EEA: 1055 X	N	885 and 970 demands struc. option DB or DE 2400 and 2800 demands struc. option DC or DF 1055 demands struc. option DD or DG
	POS		Position of group tone	1/2/3/4/5/6/7/X POS= 1 indicates All call	N	POS= N only if GRP= N POS= 1 demands hardware modification tonemodule
FOR 2 CH. AND 10 CH. VERSIONS	ACK		Acknowledge telegram	Tonecode in accordance with tabel/X Max. 5 digits eg. ACK = 1, 2, 4, 3, 5	N	Selectable tones: 2V, 1V 2V= x10, 1V= x1 on keypad
		FOL	Following telegram	STF/X	N	
	CGD		CTCSS Decoder code	CTCSS frequency in Hz with max. 1 decimal/X eg. CGD= 131.8	N	Demands structured option C- CTCSS range 67-210 Hz; step = 0.1 Hz
	CGE		CTCSS Encoder code	CTCSS frequency in Hz with max. 1 decimal/X eg. CGD= 130.2	N	Demands structured option C- or DE/DF/DG CTCSS range 67-210 Hz; step = 0.1 Hz
	CHF		Channel Number	01A02 eg. CHF= 01	None	CHF to be repeated in two channel radio's
		RXF	Receiver frequency	Frequency in MHz with max. 4 decimals/X	None	Coherence with combination number digit 5+6 and structured option B-
		TXF	Transmitter frequency	Frequency in MHz with max. 4 decimals/X	None	Coherence with combination number digit 4+6 and structured option A-
	NAF		No Acoustic feedback	Y	N	N= radio with acoustic feedback.

TONE SYSTEM TABLE
ZVEI - CCIR - EEA

TONE-NUMBER	ZVEI 1 (Hz)	ZVEI 2 (Hz)	ZVEI 3 (Hz)	CCIR (Hz)	EEA (Hz)
1	1060	1060	970	1124	1124
2	1160	1160	1060	1197	1197
3	1270	1270	1160	1275	1275
4	1400	1400	1270	1358	1358
5	1530	1530	1400	1446	1446
6	1670	1670	1530	1540	1540
7	1830	1830	1670	1640	1640
8	2000	2000	1830	1747	1747
9	2200	2200	2000	1860	1860
0	2400	2400	2200	1981	1981
R/Y	2600	970	2400	2110	2110
A/X	2800	885	885	2247	1055
TONE-LENGHT (nom)	70 ms			100 ms	40 ms

R = Repeat A = Alarm

X/Y are special tones used in 12.5 kHz channel spacing equipment for R and A.

TONE MODULES

TYPE	TONE SYSTEM	CODE	ENC	DEC	GRP+	CG
TQ4001	ZVEI/CCIR	M905368G1	X	X		
TQ4002	ZVEI/CCIR	M905368G2	X	X	X	
TQ4003	ZVEI/CCIR	M905368G3	X	X	X	
TQ4004	EEA	M905368G4	X	X	X	
TQ4005	ZVEI/CCIR	M905368G5	X	X	X	X
TQ4006	ZVEI/CCIR	M905368G6	X	X	X	X
TQ4007	EEA	M905368G7	X	X	X	X
TG4008	ZVEI/CCIR	M905768G8	X	X	X	

The selected tone system requires the tones be properly programmed and that the correct TQ400x module is installed.

+ The grouptone can be 885/970 Hz, 2400/2800 Hz, 1055 Hz or 1981 Hz.

TQ4002 - 885/970 Hz
TQ4003 - 2400/2800 Hz
TQ4004 - 1055 Hz
TQ4005 - 885/970 Hz
TQ4006 - 2400/2800 Hz
TQ4007 - 1055 Hz
TQ4008 - 1981 Hz

In modules for which two tones are optional, the tone is selected by connecting, or disconnecting a pin on the thick film substrate.
When pin 7 is bent and not inserted in the socket the lower tone is generated.
This is only a coarse adjustment and a fine adjustment must be done by a potentiometer on the CL4001 board, refer to adjustment procedure of tone equipment.

PROGRAMMING 2 CHANNELS VERSION

CL4001

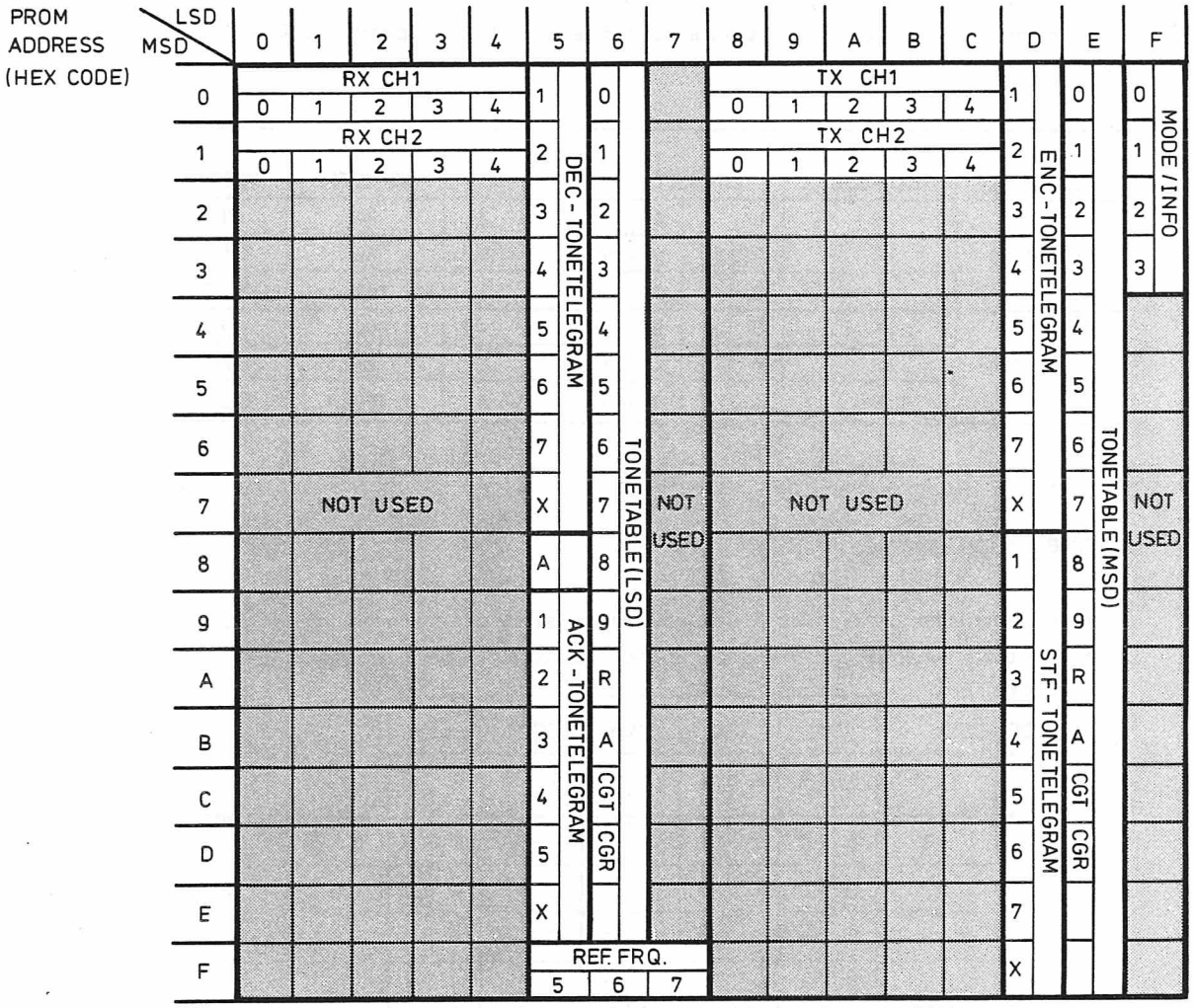

PERSONALITY PROM
256x4 ON CL4001

D403.284/2

MODE WORD

The mode word indicates the system and tone definition. Address 0F

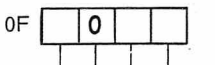

0 No TQ module
1 TQ installed
0 Normal tone length
1 Prolonged 1st tone (only encoder)= duration of preambletime programmed in addr. 2F.
– fixed bit value, always 0
0 No CG decoder
1 CG decoder (possible only with decoder)

see conversion table 1, binary code to hex code.

TONE SYSTEM

TONE LENGTH

The tone length depends on the tone system used and is programmed in address 3F. Two different micro controllers are used and require different programming. Before programming verification of the type must be ensured by inspection of CL400x.

μ-controller	ADDRESS	BINARY				HEX	m.sec. LENGTH	SYSTEM
COP320	3F	0	0	0	1	2	40	EEA
	3F	0	1	0	0	4	80	ZVEI
	3F	0	1	0	1	5	100	CCIR
COP324	3F	0	1	0	0	4	40	EEA
	3F	0	1	1	1	7	70	ZVEI
	3F	1	0	1	0	A	100	CCIR

TONE PROGRAMMING

The different frequencies for the tonesystem must by programmed in the PROM in hexadecimal code in the MSD addr. from 0 to B and the LSD addr. 6 and E as shown in the following chart.

TONE SYSTEM

ADDRESS	ZV1		ZV2		ZV3		CCIR		EEA		
LSD / MSD	6	E	6	E	6	E	6	E	6	E	corresponding DIGIT (tone)
0	7	3	7	3	C	3	3	4	3	4	0
1	D	7	D	7	8	8	6	7	6	7	1
2	2	7	2	7	D	7	E	6	E	6	2
3	8	6	8	6	2	7	8	6	8	6	3
4	E	5	E	5	8	6	1	6	1	6	4
5	6	5	6	5	E	5	B	5	B	5	5
6	F	4	F	4	6	5	6	5	6	5	6
7	8	4	8	5	F	4	1	5	1	5	7
8	2	4	2	4	8	4	C	4	C	4	8
9	C	3	C	3	2	4	7	4	7	4	9
A	3	3	8	8	7	3	F	3	F	3	R/Y repeat
B	F	2	5	9	5	9	B	3	D	7	A/X alarm

DATA

Note: If alternative reference frequency (6.5 MHz) is used, the tone frequency must be readjusted on the TQ-board.

PREAMBLETIME

PRE can be selected between 0.3 and 4.5 sec. for processor type COP320 and between 0.15 and 2.25 sec. for type COP324.
The HEXADECIMAL value for PRE must be programmed in address 2F.

Address

2F | | | | |

COP320	COP324
0.3 sec. (minimum)	0.15 sec.
0.6 sec.	0.30 sec.
1.2 sec.	0.60 sec.
2.4 sec.	1.20 sec.
4.5 sec. (maximum)	2.25 sec.

example:
selected preambletime: 1.5 sec. - COP320
to be programmed:
2F | 0 | 1 | 0 | 1 | 1.5 sec. = 1.2 + 0.3

TONE TELEGRAMS

There are four tone telegrams:

ENC encoder code
STF second telegram format
DEC decoder code
ACK acknowledge telegram

Each telegram consists of up to 7 tones and a closing bit, C_H or F_H except for ACK which can have 5 tones only.

NOTE: If less than 7 tones are used in the tone telegram, the closing bits are programmed in the address following the last tone address.
Remaining addresses, if any are left unprogrammed.

CLOSING BITS

A tone telegram must always end by a closing bit. If the ENC or the ACK telegram has to be followed by the STF telegram, C_H must be programmed in the immediate following tone address.

If the DEC telegram has to be followed by the STF telegram, C_H must be programmed in the immediate following tone address.

If the ENC, STF, DEC, or ACK are not followed by any other telegram, F_H must be programmed in the immediate following tone address. The STF telegram cannot be followed by any other telegram.

TONE TELEGRAM	FOLLOWING TELEGRAM	CLOSING BITS/HEX
ENC	-	F
ENC	STF	C
STF	-	F
DEC	-	F
DEC	ACK	C
ACK	-	F
ACK	STF	C

PROGRAMMING THE TELEGRAMS

MSD \ LSD	5	TELEGRAMS	ADDRESS D
0	1st tone		1st tone
1	2nd tone		2nd tone
2	3rd tone		3rd tone
3	4th tone		4th tone
4	5th tone		5th tone
5	6th tone	DEC ENC	6th tone
6	7th tone		7th tone
7	CLOSING BITS		CLOSING BITS
8	A	← Fixed data	1st tone
9	1st tone		2nd tone
A	2nd tone		3rd tone
B	3rd tone	ACK STF	4th tone
C	4th tone		5th tone
D	5th tone		6th tone
E	CLOSING BITS		7th tone
F			CLOSING BITS

The data to be programmed are the data stated in the tone programming chart.

SELECTABLE TONES

The selectable tones can be used in any position in the tone telegrams except on the first position of the DEC telegram.

There can be two kinds of selectable tones in each telegram: 1 V and 2 V.

1 V corresponds to the key X1 on the keyboard

2 V corresponds to the key X10 on the keyboard

To obtain a selectable tone in a telegram, following hexadecimal values have to be programmed in the appropriate address:

for 1 V: D_H

for 2 V: E_H

PROGRAMMING 10 CHANNELS VERSION

CL4002

PROM ADDRESS (HEX CODE)

LSD / MSD	0	1	2	3	4	5	6	7	8	9	A	B	C	D	E	F
0	RX CH0 0 1 2 3 4							CHANNEL MODE WORD	TX CH0 0 1 2 3 4							
1	RX CH1 0 1 2 3 4								TX CH1 0 1 2 3 4							
2	RX CH2 0 1 2 3 4								TX CH2 0 1 2 3 4							
3	RX CH3 0 1 2 3 4								TX CH3 0 1 2 3 4							
4	RX CH4 0 1 2 3 4								TX CH4 0 1 2 3 4							
5	RX CH5 0 1 2 3 4								TX CH5 0 1 2 3 4							ACC. ALERT
6	RX CH6 0 1 2 3 4								TX CH6 0 1 2 3 4							
7	RX CH7 0 1 2 3 4								TX CH7 0 1 2 3 4							
8	RX CH8 0 1 2 3 4								TX CH8 0 1 2 3 4							
9	RX CH9 0 1 2 3 4								TX CH9 0 1 2 3 4							
A		CG.	DEC.							CG.	DEC.					
B																
C		CG.	ENC.				CGT.			CG.	ENC.				CGT.	
D							CGR.								CGR.	
E																
F						REF. FRQ. 5 6 7										

PERSONALITY PROM 256x4 ON CL4002

D403.632/2

The channels are numbered from 0 to 9.

MODE WORD

The mode word indicates channel informations. There is a mode word for each channel.

Address $x7_H$ (x= 0-9, channel number)

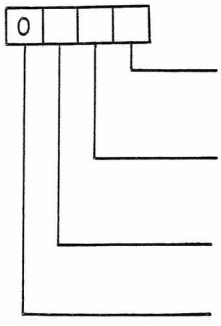

CGD - Channel guard decorder

CGE - Channel guard encorder

CHANNEL GUARD PROGRAMMING

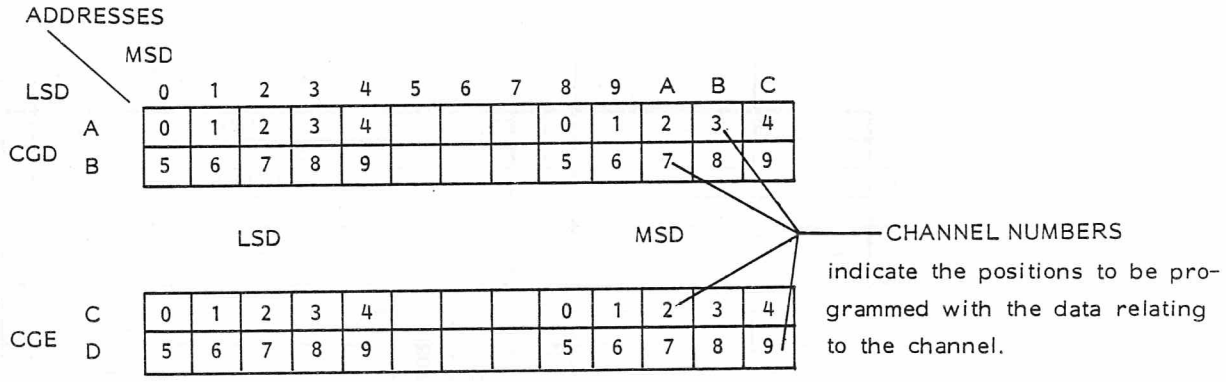

The channel guard decoder data include 2 data (Hex) from the channel guard for channel 1 are programmed on addresses:
address $A1_H$ for the LSD part and address $A9_H$ for the MSD part

for channel 7 on:
address $B2_H$ for the LSD part and address BA_H for the MSD part
as excamples.
Example: Channel 1, CGD = 91.5 Hz; data = $B3_H$
Address $A1_H = 3_H$ and address $A9_H = B_H$

CHANNEL GUARD DECODER DUMMY DATA

If channel guard decoder is not used, even if only on one channel, a dummy value must be programmed.

Address	Data (Hex)
C6	0
CE	1

CHANNEL GUARD ENCODER DUMMY DATA

If channel guard encoder is not used, even if only on one channel, a dummy value must be programmed.

Address	Data (Hex)
D6	D
DE	7

Storno

CHANNEL FREQUENCY PROGRAMMING

CQP4xxx

Calculation of the channel data, refer to the procedure on the work sheet, results in three hexadecimal numbers:

A	(two digits)	for RX and TX
N	(three digits)	for RX and TX
R	(three digits)	reference crystal data

CHANNEL PROGRAMMING RX/TX CL4001

2 CHANNELS VERSION

X_H addr. corresponds to channel number minus 1.

ex: addr. MSD 0_H channel 1
addr. MSD 1_H channel 2

Note: If only one channel is used, it is necessary in order to avoid misusing of the CQP4000, to program both channel 1 and channel 2 to the same frequency.

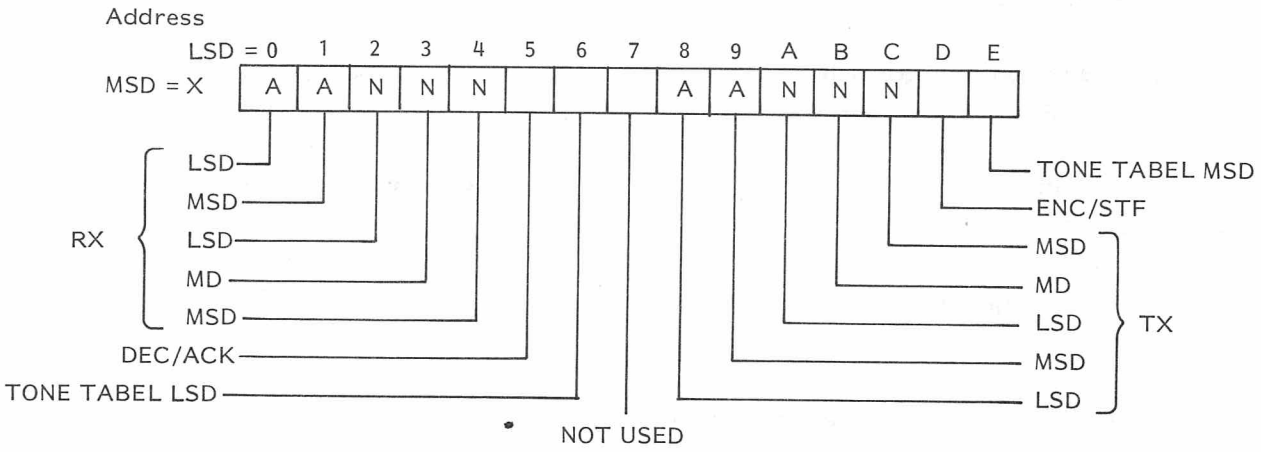

CHANNEL PROGRAMMING RX/TX CL4002

10 CHANNELS VERSION

X_H addr. corresponds to channel number The X value can be from 0_H to 9_H.

ex: addr MSD 0_H channel 0
addr MSD 8_H channel 8

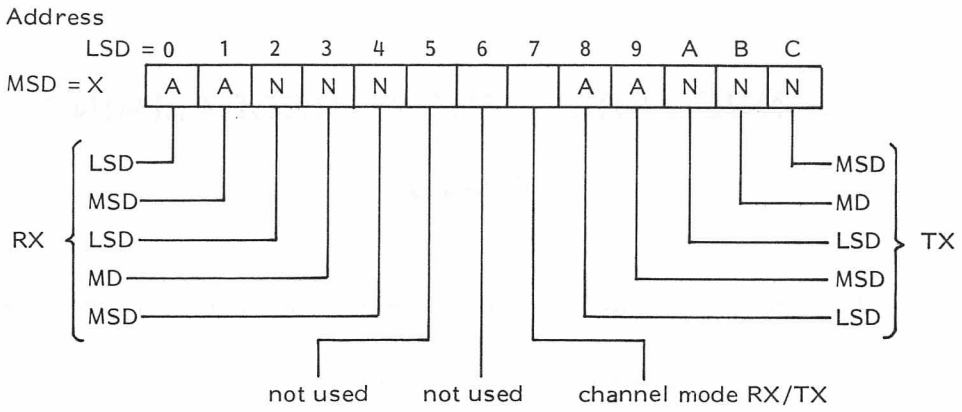

REFERENCE FREQUENCY

The reference frequency selected has to be programmed in addresses F5, F6, and F7.
The hex values to be programmed depends on:

- frequency band
- reference crystal
- channel spacing

See the following worksheet corresponding to the different frequency bands.

CALCULATION OF FREQUENCY INFORMATIONS

(refer to worksheet)

RECEIVER FREQUENCY

Depending upon SELFQUIETING result:

$F_{vco} = F_{ant}$ (in kHz) ±21400

TRANSMITTER FREQUENCY

$F_{vco} = F_{ant}$ (in kHz)

COMMON FOR RECEIVER/TRANSMITTER FREQUENCIES

$F_{ref.}$ = 10 kHz or 5 kHz for 20 kHz channel spacing

$F_{ref.}$ = 12.5 kHz or 6.25 kHz for 25 kHz channel spacing

$$N1 = \frac{F_{vco}}{(F_{ref.} \times 40 \text{ or } 64)}$$

40 for CQP411x and CQP433x
64 for CQP466x

N2= Round off N1 to nearest lower number without decimals.

A1= 40 or 64 x (N1-N2).

The calculation continues in one of two ways:

If A1 $\geq$4,	If A1 <4
then	then
N= N2	N= N2-1
A= A1	A= 40 or 64 x (N1-N)

Transform A and N to Hex by using the HEX CODE CONVERSION table, section 40.

See the following worksheets corresponding to the different frequency bands.

PROGRAMMING EXAMPLE CQP411x

RECEIVER	TRANSMITTER
$F_{vco} = f_{ant} \pm 21400^{+}$	$F_{vco} = f_{ant}$ kHz

A	$N1 = \frac{F_{vco}}{f_{ref} \times 40}$
B	N2= INT (N1)= N1, (xyz) Round down to nearest number without decimals
C	A1= 40 x (N1 - N2)

?

A1 $\geq$4 (4 - 39)		A1 <4 (0 - 3)	
D	N= N2	D	N= N2 - 1
E	A= A1	E	A= 40 x (N1 - N)
CONVERT N AND A TO HEX			

REFERENCE CRYSTAL	CHANNEL SPACING	F_{ref}	ADDRESS F5	F6	F7
6.4 MHz	10/20 kHz	10 kHz	0	8	2
	12.5/25 kHz	12.5 kHz	0	0	2
6.5 MHz	10/20 kHz	10 kHz	A	8	2
	12.5/25 kHz	12.5 kHz	8	0	2

+ Depends on selfquieting check

Ex.: CHANNEL 1

F_{ant} RX= F_{ant} TX= 158 MHz

- 25 kHz channel spacing
- standard reference crystal 6.4 MHz

RECEIVER	STEP	TRANSMITTER
F_{vco}= 158000 kHz RX - 21400 kHz = 136600 kHz	A	F_{vco}= 158000 kHz
N1= $\frac{F_{vco}}{F_{ref} \times 40}$		N1= $\frac{F_{vco}}{F_{ref} \times 40}$
$\frac{136600}{12.5 \times 40}$ =273.2		$\frac{158000}{12.5 \times 40}$ =316.0
N2= 273.0	B	N2= 316.0
		N= 316 - 1 = 315
A1= 0.2 x 40 = 8	C	A1= 0
		A= 40 x (316 - 315) = 40
N= 273 decimal equivalent 111_H	D	N= 315 decimal equivalent $13B_H$
A= 8 decimal equivalent 08_H	E	A= 40 decimal equivalent 28_H

ADDR. LSD / MSD	0	1	2	3	4
2 CH	0	8	0	1	1	1
10 CH	1					

ADDR. LSD / MSD	8	9	A	B	C
2 CH	0	8	2	B	3	1
10 CH	1					

The locations in the PROM, which are not used, should be left HEX 0 or HEX F.

TEST FOR SELFQUIETING

146.615 MHz: Note 2
147.200 MHz: Note 1
150.400 MHz: Note 1
153.600 MHz: Note 1
156.800 MHz: Note 1
160.000 MHz: Note 1
163.200 MHz: Note 1
164.000 to
164.1375 MHz: Note 4
166.400 MHz: Note 1
167.560 MHz: Note 2
165.5625 to
167.700 MHz: Note 4
169.600 MHz: Note 1
172.800 MHz: Note 1
176.000 MHz: Note 1

Note 1: Use alternative ref. crystal 6.5 MHz
Note 2: Use alternative 2nd IF crystal 21.855 MHz
Note 4: Altenative RX injection frequency, remove C548, C549 and C521 on RF board. (refer to Hardware Options)

PROGRAMMING EXAMPLE CQP433x

RECEIVER	TRANSMITTER
$F_{vco} = f_{ant} + 21400$	$F_{vco} = f_{ant}$ kHz

A	$N1 = \frac{F_{vco}}{f_{ref} \times 40}$
B	N2= INT (N1) = N1, (xyz) Round down to nearest number without decimals
C	A1= 40 x (N1 - N2)

?

A1 ≥4 (4 - 39)		A1 <4 (0 - 3)	
D	N= N2	**D**	N= N2 - 1
E	A= A1	**E**	A= 40 x (N1 - N)
CONVERT N AND A TO HEX			

REFERENCE CRYSTAL	CHANNEL SPACING	F_{ref}	ADDRESS F5	F6	F7
6.4 MHz	10/20 kHz	5 kHz	0	0	5
	12.5/25 kHz	6.25 kHz	0	0	4
6.5 MHz	10/20 kHz	5 kHz	4	1	5
	12.5/25 kHz	6.25 kHz	0	1	4

Ex.: CHANNEL 1

F_{ant} RX= F_{ant} TX= 80.5 MHz

- 20 kHz channel spacing
- standard reference crystal 6.4 MHz

RECEIVER	STEP	TRANSMITTER
F_{vco}= 80500 kHz RX + 21400 kHz = 101900 kHz	A	F_{vco}= 80500 kHz
$N1 = \frac{F_{vco}}{F_{ref} \times 40}$		$N1 = \frac{F_{vco}}{F_{ref} \times 40}$
$\frac{101900}{5 \times 40} = 509.5$		$\frac{80500}{5 \times 40} = 402.5$

STEP

B

C

D

E

N2= 509.0

A1= 0.5 x 40 = 20

N= 509 decimal equivalent $1FD_H$

A= 20 decimal equivalent 14_H

N2= 402.0

A1= 0.5 x 40 = 20

N= 402 decimal equivalent 192_H

A= 20 decimal equivalent 14_H

	ADDR. LSD / MSD	0	1	2	3	4
2 CH	0	4	1	D	F	1
10 CH	1					

	ADDR. LSD / MSD	8	9	A	B	C
2 CH	0	4	1	2	9	1
10 CH	1					

The locations in the PROM, which are not used, should be left HEX 0 or HEX F.

TEST FOR SELFQUIETING

70.400 MHz: Note 1
76.800 MHz: Note 1
83.200 MHz: Note 1
83.780 MHz: Note 2

Note 1: Use alternative ref. crystal 6.5 MHz
Note 2: Use alternative 2. IF crystal 21.855 MHz

(refer to Hardware Options)

PROGRAMMING EXAMPLE CQP466x

RECEIVER	TRANSMITTER
$F_{vco} = f_{ant} - 21400$	$F_{vco} = f_{ant}$ kHz

A	$N1 = \frac{F_{vco}}{f_{ref} \times 64}$
B	N2= INT (N1) = N1, (xyz) Round down to nearest number without decimals
C	A1= 64 x (N1 - N2)

?

A1 ≥4 (4 - 63)		A1 <4 (0 - 3)	
D	N= N2	**D**	N= N2 - 1
E	A= A1	**E**	A= 64 x (N1 - N)
CONVERT N AND A TO HEX			

REFERENCE CRYSTAL	CHANNEL SPACING	F_{ref}	ADDRESS F5	F6	F7
6.4 MHz	10/20 kHz	10 kHz	0	8	2
	12.5/25 kHz	12.5 kHz	0	0	2
6.5 MHz	10/20 kHz	10 kHz	A	8	2
	12.5/25 kHz	12.5 kHz	8	0	2

Ex.: CHANNEL 1

F_{ant} RX= F_{ant} TX= 450 MHz

With 25 kHz channel spacing

standard reference crystal 6.4 MHz

RECEIVER	STEP	TRANSMITTER
F_{vco}= 450000 kHz - 21400 kHz = 428600 kHz	**A**	F_{vco}= 450000 kHz
$N1 = \frac{F_{vco}}{F_{ref} \times 64}$		$N1 = \frac{F_{vco}}{F_{ref} \times 64}$
$\frac{428600}{12.5 \times 64} = 535.75$		$\frac{450000}{12.5 \times 64} = 562.5$

STEP

N2= 535.0

A1= 0.75 x 64 = 48

N= 535 decimal equivalent 217_H

A= 48 decimal equivalent 30_H

B → C → D → E

N2= 562.0

A1= 0.5 x 64 = 32

N= 562 decimal equivalent 232_H

A= 32 decimal equivalent 20_H

	ADDR. LSD / MSD	0	1	2	3	4
2 CH	0	0	3	7	1	2
10 CH	1					

	ADDR. LSD / MSD	8	9	A	B	C
2 CH	0	0	2	2	3	2
10 CH	1					

The locations in the PROM, which are not used, should be left HEX 0 or HEX F.

TEST FOR SELFQUIETING

418.900 MHz: Note 2
439.845 MHz: Note 2
460.790 MHz: Note 2

Note 2: Use alternative 2. IF crystal 21.855 MHz (refer to Hardware Options)

CRYSTAL LIST

19J707019P1	6.4 MHz crystal, 10 ppm
19J707019P3	6.4 MHz crystal, 5 ppm
19J707309P1	20.945 MHz crystal
19J707019P2	6.5 MHz crystal, 10 ppm
19J707019P4	6.5 MHz crystal, 5 ppm
19J707309P2	20.855 MHz

HARDWARE OPTIONS

1. 20.945 MHz or 21.855 MHz 2nd IF crystal and washer J707484P1, refer to selfquieting check (Note 2).

2. 6.4 MHz or 6.5 MHz reference crystal and washer J707484P1, refer to channel spacing and selfquieting check (Note 1).

3. 10 ppm stability, remove R522 on RF board.

4. Alternative RX-injection frequency, remove C548, C549 and C521 on RF board, refer to selfquieting check (Note 4).

5. NAF= Yes, cut resistor R906 on CL500x to disable attention tone and alarm tone.

6. 12.5 kHz and Swedish radios, cut resistor R818 on CL400x to change modulation response.

7. If channel guard decoder, remove strap on CL400x (line-filtered line).

PROGRAMMING 10 CHANNELS VERSION WITH TONE SIGNALLING

CL4002

The personality PROM contains the data for channel frequencies, tone telegrams and options as specified by the customer.

The software options are specified by the structured options shown in the table on page 2.

The nomenclature consists of FUNCTION DESCRIPTOR and FUNCTION DATA for each function.
Each function descriptor has a main mnemonic code and optional a number of subfunctions. If a function or subfunction is not specified the default value must be programmed.

In the description, the addresses are marked by enhanced print.

Example: Channel 01, RX frequency 151.4500, TX frequency 155.0000, Channel guard decoder frequency 130.2 Hz, Channel guard encoder frequency 131.8 Hz, 5-tone sequential telegram to be sent on first push-to-talk (PTT) only.

Nomenclature specification:

CHF = 01:	Main function Channel number
RXF = 151.4500:	Sub function RX frequency
TXF = 155.0000:	Sub function TX frequency
CGD = 130.2:	Sub function CG decoder frequency
CGE = 131.8:	Sub function CG encoder frequency
TOE = N:	Sub function No Tone transmission on each PTT.

The specified function data are used to program the personality prom. Each data set relates to specific addresses in the prom and should be written in binary notation for each bit, either 0 or 1. When all bits for an address are programmed the binary value is converted to hexadecimal notation and used as input to the programming equipment. Any unused bit of an address must be set to 0.

PERSONALITY PROM

The personality prom is a 256 x 4 bit device Storno part number J707417P1.
The prom contents is structured as shown in the prom layout. The function data specified require one or several addresses to be programmed. In the programming instruction each function and its subfunctions and options are specified.

Function-describer Main	Sub	Function	Valid Function Date	Default Value	Remarks
TON		Tone system	ZV1/ZV2/ZV3/CCI/EEA/N Eg. TON = ZV1	N	Demands structured option D or CC
PRE		Preambletime	From 0.15 to 2.4 s. in 0.15 s. steps Eg. PRE = 1.05	0.3	The presence of preamble to be chosen for each telegram
DUT		Durationtime	From 0.15 to 2.4 s. in 0.15 s. steps Eg. DUT = 0.9	1.05	The presence of duration to be chosen for each telegram
ENC		Encoder code	Tone code in accordance with tonetable or N. Max. 7 digits. Eg. ENC = 1.2.3.4.5.1V.2V	N	Selectable tones: 1V = x1 2V = x10
	PRR	Preamble release	Y = Yes/N = No, Eg. PRR = N	Y	Preambletime chosen under PRE
	DUR	Duration	Y = Yes/N = No, Eg. DUR = Y	N	Durationtime chosen under DUT
	FOL	Following telegram	STF/N = No, Eg. FOL = STF	N	
STF		Second telegramformat	Tone code in accordance with tonetable/ENC/DEC/TTF/N= No, Max. 7 digits. Eg. STF = DEC	N	Selectable tones: 1V = x1 2V = x10
	PRR	Preamble release	Y = Yes/N = No, Eg. PRR = N	Y	Preambletime chosen under PRE
	DUR	Duration	Y = Yes/N = No, Eg. DUR = Y	N	Durationtime chosen under DUT
	FOL	Following telegram	TTF/N = No, Eg. FOL = TTF	N	
TTF		Third telegramformat	Tone code in accordance with tonetable/ENC/DEC/STF/N= No, Max. 6 digits Eg. TTF 1.2.3.1V.2V.6	N	Selectable tones: 1V = x1 2V = x10
	PRR	Preamble release	Y = Yes/N = No, Eg. PRR = N	Y	Preambletime chosen under PRE
	DUR	Duration	Y = Yes/N = No, Eg. DUR = Y	N	Durationtime chosen under DUT
	FOL	Following telegram	DEC/N = No, Eg. FOL = DEC	N	
DEC		Decoder code	Tone code in accordance with tonetable or N. Max. 7 digits. Eg. DEC = 1.2.3.4.5.6.7	N	Demands structured option D
	PRR	Preamble release	Y = Yes/N = No, Eg. PRR = N	Y	Preambletime chosen under PRE
	DUR	Duration	Y = Yes/N = No, Eg. DUR = Y	N	Durationtime chosen under DUT
	ACK	Acknowledge telegram	ENC/STF/TTF/DEC/N = No	N	
	GRP	Group tone	ZVEI-CCIR: 885/970/1981/2400/2800 EEA: 1055 Eg. GRP = 1981	N	885 and 970 demands struc. option DB or DE. 2400 and 2800 demands struc. option DC or DF 1981 demands struc. option DH. 1055 demands struc. option DD or DG.
	POS	Position of group tone	1/2/3/4/5/6/7/N = Do not care, Eg. POS = 5	N	All call accept. in all versions with group call
	BDT	Break down time	From 0.15 to 2.4 s. in 0.15 s. steps. Eg. BDT = 2.1	0.6	
ALO		Address low limit	0/1/2/3/4/5/6/7/8/9	0	x10 minimum value
AHI		Address high limit	0/1/2/3/4/5/6/7/8/9	9	x10 maximum value
PTR		Push to talk release	ENC/STF/TTF/DEC/N = No,	N	Telegram to be released on PTT
TOF		Tone transmission on first PTT	Y = Yes/N = No	N	Released telegram defined under PTR
PTA		Push to talk admit	0 = LS open or channel free 1 = Channel free 2 = LS open 3 = No limitations. Eg. PTA = 3	0	Criteria of transmission with button
TKA		Tone key admit	0 = LS open or channel free 1 = Channel free 2 = LS open 3 = No limitations. Eg. TKA = 1	0	Criteria of transmission with button
PRI		Privacy	Y = Yes/N = No	N	Yes = No manual opening of LS
	BDT	Break down time	From 2.4 to 38.4 s. in 2.4 s. steps. Eg. BDT = 4.8	2.4	From carrier disappearance to automatic LS switch off
	MAT	Monitoring after tone transm.	Y = Yes/N = No, Eg. MAT = N	Y	
	MAC	Monitoring after channel shift	Y = Yes/N = No, Eg. MAC = Y	N	
CCT		Carrier control timer	From 10 s. to 160 s. in 10 s. steps or N = No, Eg. CCT = 20	N	
CHF		Channel number	01/02/03/04/05/06/07/08/09/10 Eg. CHF = 01		This function together with subfunctions must be repeated for each channel. Channel 10 shown in display as C0.
	RXF	Receiver frequency	Frequency in MHz with max. 4 decimals. Eg. RXF = 179.350		Coherence with combination number digit 5+6 and structured option B
	TXF	Transmitter frequency	Frequency in MHz with max. 4 decimals. Eg. TXF = 179.350		Coherence with combination num. digit 4+5 and structured option A
	CGD	CTCSS decoder code (Channel Guard)	CTCSS frequency in Hz with max. 1 decimal. CTCSS range 67 - 210 Hz, Eg. CGD = 131.8		Demands structured option C
	CGE	CTCSS encoder code (Channnel Guard)	CTCSS frequency in Hz with max. 1 decimal. CTCSS range 67 - 210 Hz, Eg. CGE = 130.2		Demands structured option C or DE/DF/DG
	TOE	Tone transmission on each PTT	Y = Yes/N = No, Eg. TOE = Y	N	Released telegram defined under PTR
NAF		No acoustic feedback	Y = Yes/N = No, Eg. NAF = Y	N	N = radio with acoustic feedback
	ALM	Alarm	0/1/2/3/4/5/6/7 Eg. ALM = 2 0 = low. 7 = high	4	Alarmtone for switch off and battery protection
	ACA	Acoustic attention level	0/1/2/3/4/5/6/7/ALM 0 = low. 7 = high Eg. ACA.= 6	ALM	Attention tone for call
	CAT	Continuous attention tone	Y = Yes/N = No, Eg. CAT = Y	N	When call received

PROM ADDRESS (HEX CODE)

LSD / MSD	0	1	2	3	4	5	6	7	8	9	A	B	C	D	E	F
0	RX CH 0					1 DEC TELEGRAM	0 TONE TABLE LSD	0 CHANNEL MODES	TX CH 0					1 ENC TELEGRAM	0 TONE TABLE MSD	MODE 1
1	RX CH 1					2	1	1	TX CH 1					2	1	GRP
2	RX CH 2					3	2	2	TX CH 2					3	2	PRE AMP
3	RX CH 3					4	3	3	TX CH 3					4	3	TON
4	RX CH 4					5	4	4	TX CH 4					5	4	BRD
5	RX CH 5					6	5	5	TX CH 5					6	5	OFF VOL
6	RX CH 6					7	6	6	TX CH 6					7	6	AL VOL
7	RX CH 7					X	7	7	TX CH 7					X	7	MOD PTT
8	RX CH 8					1 TF-TELEGRAM	8	8	TX CH 8					1 STF TELEGRAM	8	MOD TON
9	RX CH 9					2	9	9	TX CH 9					2	9	MODE 2
A	CG.DEC.(LSD)					3	R	PRE	CG.DEC.(MSD)					3	R	PRI TIM
B	CG.DEC.(LSD)					4	A	TOF	CG.DEC.(MSD)					4	A	X10 MAX
C	CG.ENC.(LSD)					5	CGE	ACK	CG.ENC.(MSD)					5	CGE	X10 MIN
D	CG.ENC.(LSD)					6	CGD	DUR	CG.ENC.(MSD)					6	CGD	CCT MOD
E						X		DUR TIM.						7		CCT TIM
F						REF FREQ 5 6 7								X		AL TIM

PERSONALITY PROM 256 x 4 ON CL4002
10 CH. TONE SIGNALLING

D403.744

MODEWORD 1

The address 0F is coded with information about built in tone equipment and its options as follows:

0F

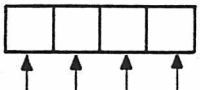

1 = Sequential Tone encoder present
0 = Sequential Tone encoder not active
1 = Sequential tone decoder present
0 = Sequential tone decoder not active
1 = Selectable display digit X1 active
0 = Selectable display digit X1 disabled
1 = Selectable display digit X10 active
0 = Selectable display digit X10 disabled

TONE SYSTEM (TON)

(ZV1, ZV2, ZV3, CCI, EAA, N)

IF TON = N (no tone telegrams) then don't program these addresses.

Addresses **xE** (X=0-B) : Most significant digits from the tone table data.

x6 (X=0-B) : Least significant digits from the tone table data.

3F : Tone length in steps of 10 m sec.

TONE SYSTEM		ZV1		ZV2		ZV3		CCIR		EEA		
ADDR. LSD / MSD		6	E	6	E	6	E	6	E	6	E	
0		7	3	7	3	C	3	3	4	3	4	0
1		D	7	D	7	8	8	6	7	6	7	1
2		2	7	2	7	D	7	E	6	E	6	2
3		8	6	8	6	2	7	8	6	8	6	3
4		E	5	E	5	8	6	1	6	1	6	4
5		6	5	6	5	E	5	B	5	B	5	5
6		F	4	F	4	6	5	6	5	6	5	6
7		8	4	8	5	F	4	1	5	1	5	7
8		2	4	2	4	8	4	C	4	C	4	8
9		C	3	C	3	2	4	7	4	7	4	9
A		3	3	8	8	7	3	F	3	F	3	R/Y repeat
B		F	2	5	9	5	9	B	3	D	7	A/X alarm
	DATA	↑		↑		↑		↑		↑		

corresponding DIGIT (tone)

The data as read from the table are programmed as a look-up table for the tone telegrams. Each tone telegram is later specified as tone telegram formats.

TONE LENGTH (Address 3F).

The selected tone system option requires the tone length to be programmed in address 3F.

TONE SYSTEM	ZV1	ZV2	ZV3	CCI	EEA
TONE LENGTH msec	70	70	70	100	40
DATA (HEX)	7	7	7	A	4

PREAMBLE TIME (PRE)

(0.15 - 2.40 sec)

The PREAMBLE time (i.e. the time before the first tone burst) is programmed in address 2F, whose base value is 0.15 sec.
The time is programmed in steps of 0.15 sec, minimum being 0.15 sec and maximum 2.40 sec (0 = 2.40 sec).

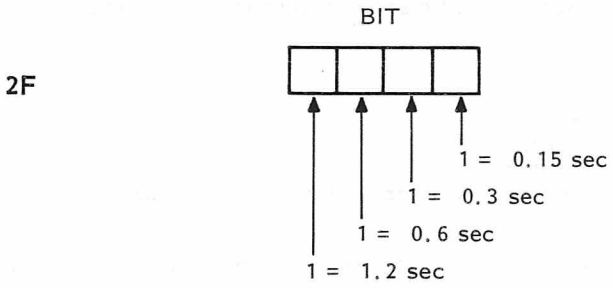

The resulting preamble time is the sum of the times programmed 1.+0.15 sec

Example: PRE = 2.1 sec

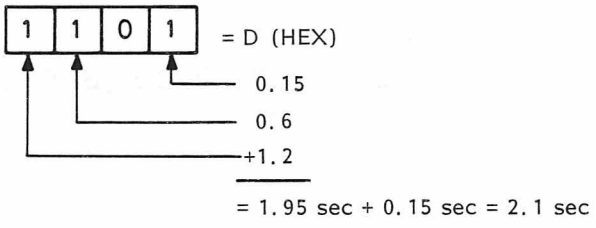

The selected preamble time will be valid for all tone telegrams for which the preamble is released.
Preamble release is programmed later (Subfunction PRR).

DURATION TIME (DUT)

(0.15 - 2.40)

The DURATION TIME (i.e. the length of the first tone in each telegram) is programmed in address E7.

The time is programmed in steps of 0.15 sec, minimum being 0.15 sec and maximum 2.40 sec (0 = 2.40 sec).

E7

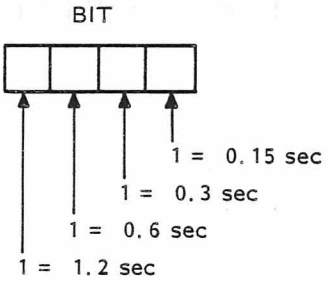

The resulting duration time is the sum of the times programmed 1.+0.15 sec.

Example: DUT = 1.65 sec

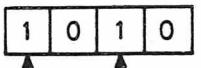

= A (HEX)

1.2 + 0.3 = 1.5 sec + 0.15 sec = 1.65 sec

The selected duration time will be valid for all telegrams for which the duration time is released.
Duration release is programmed later (subfunction DUR).

ENCODER CODE (ENC)

(Tone sequence)

The encoder telegram is programmed in addresses xD (x = 0-7) in accordance with the tone table. Selectable tones in the telegram are designated 1V and 2V. The maximum number of tones is 7 (including selectable tones).

The data programmed in each address are taken from the

TONE SYSTEM TABLE
ZVEI - CCIR - EEA

TONE-NUMBER	ZVEI 1 (Hz)	ZVEI 2 (Hz)	ZVEI 3 (Hz)	CCIR (Hz)	EEA (Hz)	DATA (HEX)
1	1060	1060	970	1124	1124	1
2	1160	1160	1060	1197	1197	2
3	1270	1270	1160	1275	1275	3
4	1400	1400	1270	1358	1358	4
5	1530	1530	1400	1446	1446	5
6	1670	1670	1530	1540	1540	6
7	1830	1830	1670	1640	1640	7
8	2000	2000	1830	1747	1747	8
9	2200	2200	2000	1860	1860	9
0	2400	2400	2200	1981	1981	0
R/Y	2600	970	2400	2110	2110	A
A/X	2800	885	885	2247	1055	B
1V	VARIABLE TONE (X1)					D
2V	VARIABLE TONE (X10)					E
TONE-LENGTH (nom)	70 ms			100 ms	40 ms	

R = Repeat A = Alarm
X/Y are special tones used in 12.5 kHz channel spacing equipment for R and A.

fig. nr. 1

- PREAMBLE RELEASE

(PRR) = (Y), (N)

The PREAMBLE RELEASE subfunction selects the preamble as specified by PRE.

The release is programmed in address A7.

A7

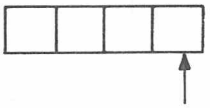

1 = Preamble on ENCodertelegram.
0 = No preamble on ENCoder telegram

Note: The remaining bits are programmed according to PRR specified under STF, TTF and DEC.

- DURATION

(DUR) = (Y), (N)

The DURATION RELEASE subfunction selects the length of the first tone to be prolonged as specified by DUT.

The duration is programmed in address D7

D7

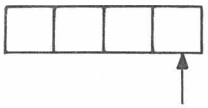

1 = Prolonged 1st tone on ENC telegram

0 = Not prolonged 1st tone on ENC telegram

Note: The remaining bits are programmed according to DUR specified under STF, TTF and DEC.

- FOLLOWING TELEGRAM

(FOL) = (STF), (N)

The subfunction FOLLOWING TELEGRAM specifies whether the ENC telegram is followed by another telegram or not.

The ENC telegram must always end with a closing digit, either C or F (HEX).

C = SEND NEXT TELEGRAM (FOL = STF)
F = NO MORE TELEGRAMS (FOL = N)

The closing digit is placed immediately after the tone digits.

SECOND TELEGRAM FORMAT (STF)

(Tone sequence)

The SECOND TELEGRAM FORMAT is programmed in addresses XD (X = 8-F) in accordance with the tone table under function ENC , fig. 1.

Selectable tones are designated 1V and 2V.

The maximum number of tones is 7 (including selectable tones).

• PREAMBLE RELEASE

(PRR) = (Y), (N)

The PREAMBLE RELEASE subfunction selects the preamble as specified by PRE.

The release is programmed in address A7.

A7

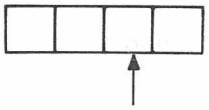

1 = Preamble on STF telegram
0 = No preamble on STF telegram

Note: The remaining bits are programmed according to PRR under ENC, TTF and DEC.

• DURATION

(DUR) = (Y), (N)

The DURATION RELEASE subfunction selects the length of the first tone to be prolonged as specified by DUT.

The release is programmed in address D7.

D7

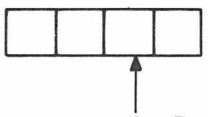

1 = Prolonged 1st tone on STF telegram
0 = not prolonged 1st tone on STF telegram

Note: The remaining bits are programmed according to PRR specified under ENC, TTF and DEC.

- FOLLOWING TELEGRAM

(FOL) = (TTF), (N)

The subfunction FOLLOWING TELEGRAM specifies whether the STF telegram is followed by another telegram or not.

The STF telegram must always end with a closing digit, either C or F (HEX).
C = SEND NEXT TELEGRAM (FOL = TTF)
F = NO MORE TELEGRAMS (FOL = N)
The closing digit is placed immediately after the tone digits.

THIRD TELEGRAM FORMAT (TTF)

(Tone sequence)

The THIRD TELEGRAM FORMAT is programmed in addresses x5 (x = 8-E) in accordance with the tone table under function ENC, fig. 1.

Selectable tones are designated 1V and 2V.

The maximum number of tones is 6 (including selectable tones).

- PREAMBLE RELEASE

(PRR) = (Y), (N)

The PREAMBLE RELEASE subfunction selects the preamble as specified by PRE.

The release is programmed in address A7.

A7

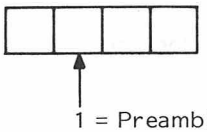

1 = Preamble release on TTF telegram
0 = No preamble release on TTF telegram

Note: The remaining bits are programmed according to PRR under ENC, STF and DEC.

- DURATION

(DUR) = (Y), (N)

The DURATION RELEASE subfunction selects the length of the first tone to be prolonged as specified by DUT.

The release is programmed in address D7.

D7

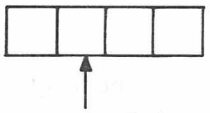

1 = Release of prolonged 1st tone on TTF telegram
0 = No release of prolonged 1st tone on TTF telegram

Note: The remaining bits are programmed according to DUR under ENC, STF and DEC.

- FOLLOWING TELEGRAM

(FOL) = (DEC), (N)

The subfunction FOLLOWING TELEGRAM specifies whether the TTF telegram is followed by another telegram or not.

The TTF telegram must always end with a closing digit, either C or F (HEX).
C = SEND NEXT TELEGRAM (FOL = DEC)
F = NO MORE TELEGRAMS (FOL = N)
The closing digit is placed immediately after the tone digits.

DECODER CODE (DEC)

(Tone sequence)

The Tone Decoder Telegram format (DEC) is programmed in addresses x5 (x = 0-7) in accordance with the tone table under function ENC, fig. 1.

The maximum number of tones is 7.

- PREAMBLE RELEASE

(PRR) = (Y), (N)

The PREAMBLE RELEASE subfunction selects the preamble as specified by PRE.
The release is programmed in address A7.

A7

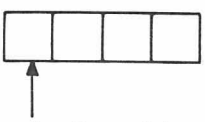

1 = Preamble on DEC telegram
0 = No preamble on DEC telegram

Note: The remaining bits are programmed according to PRR under ENC, STF and TTF.

- DURATION

(DUR) = (Y), (N)

The DURATION RELEASE subfunction selects the length of the first tone to be prolonged as specified by DUT if the DEC telegram is used as acknowledge telegram.

The release is programmed in address D7.

D7

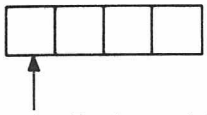

1 = Prolonged 1st tone on DEC telegram
0 = Not prolonged 1st tone on DEC telegram

Note: The remaining bits are programmed according to DUR under ENC, STF and TTF.

- ACKNOWLEDGE TELEGRAM

(ACK) = (ENC), (STF), (TTF), (DEC), (N)

The acknowledge subfunction selects the tone telegram to be transmitted as acknowledge to a tone call.

The acknowledge telegram is programmed in address C7.

C7

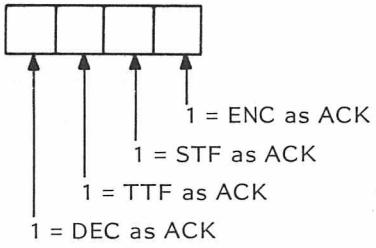

Note: Only one bit allowed to be programmed.

- GROUP TONE

(GRP) = (Group tone frequency, Hz), (N)

The GROUP TONE subfunction selects the group tone frequency.

Structured Option	Tone Module Type	Part Number	Tone System	Group Tone, Hz	Channel Guard
DA	TQ4001	M905368G1	ZVEI/CCIR	None	No
DB	TQ4002	M905368G2	ZVEI/CCIR	885/970	No
DC	TQ4003	M905368G3	ZVEI/CCIR	2400/2800	No
DD	TQ4004	M905368G4	EEA	1055	No
DE	TQ4005	M905368G5	ZVEI/CCIR	885/970	Yes
DF	TQ4006	M905368G6	ZVEI/CCIR	2400/2800	Yes
DG	TQ4007	M905368G7	EEA	1055	Yes
DH	TQ4008	M905368G8	ZVEI/CCIR	1981	No

In tone modules for which two group tones are optional, the tone is selected by disconnecting or connecting pin 7 on the thick film substrate. When pin 7 is bent and not connected the lower tone is selected. This is, however, only a coarse adjustment of the frequency and fine adjustment is performed by a potentiometer on the CL400x board, refer to adjustment procedure.

The specification of GRP itself requires no programming as it is a selection of hardware only.

• POSITION OF GROUP TONE

(POS) = (1), (2), (3), (4), (5), (6), (7), (N)

The POSITION OF GROUP TONE subfunction specifies on which position in the decoder sequence the group tone is accepted.

The POSITION is programmed in address 1F.

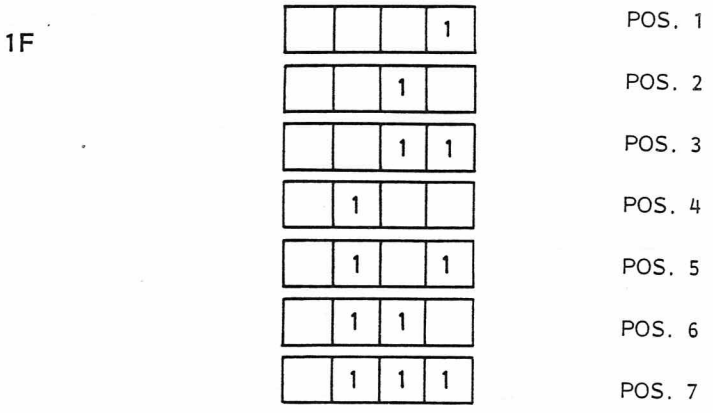

If all bits are programmed 0 (POS = N) the group tone will be accepted regardless of its position in the sequence.

- BREAK DOWN TIME

(BDT) = (0.15 - 2.25 sec)

The BREAK DOWN TIME subfunction selects the break down time after a group call. Default value is 0.6 sec.

The BDT is programmed in address 4F.

The time is programmed in steps of 0.15 sec, minimum being 0.15 sec and maximum 2.25 sec.

4F

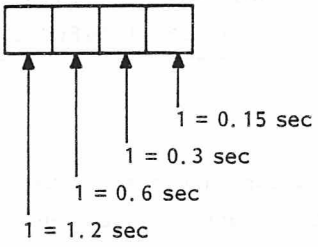

The resulting break down time is the sum of the times programmed 1.

Example: BDT = 0.6

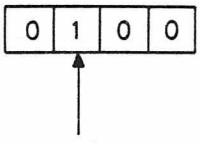

= 8 (HEX)

ADDRESS LOW LIMIT (ALO)

(0), (1), (2), (3), (4), (5), (6), (7), (8), (9)

The ADDRESS LOW LIMIT selects the minimum value for the X10 value of the selectable tones.

The ALO is programmed in address CF.

CF

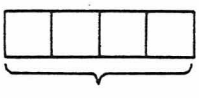

Value to be programmed 0-9 (HEX)

Example: ALO = 5

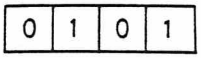

= 5(HEX)

The lowest value that can be selected with X10 and X1 is thus 50.

ADDRESS HIGH LIMIT (AHI)

(0), (1), (2), (3), (4), (5), (6), (7), (8), (9)

The ADDRESS HIGH LIMIT selects the highest value for the X10 value of the selectable tones.

The AHI is programmed in address BF.

BF

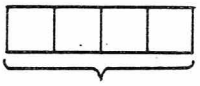

Value to be programmed 0-9 (HEX)

Example: AHI = 8

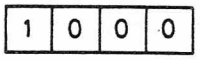

= 8(HEX)

The highest value that can be selected with X10 and X1 is thus 89.

PUSH TO TALK RELEASE (PTR)

(ENC), (STF), (TTF), (DEC), (N)

The PUSH TO TALK RELEASE specifies the telegram to be released upon PTT.
The PTR is programmed in address B7.

B7

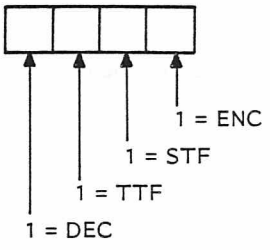

TONE TRANSMISSION ON FIRST PTT (TOF)

(Y), (N)

The function TONE TRANSMISSION ON FIRST PTT releases the telegram specified under function PTR.

The TOF function is programmed in addresses B7 and 9F.

B7

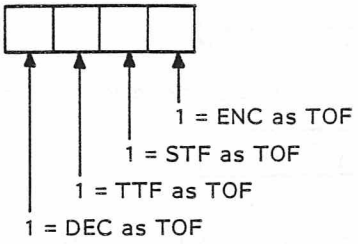

Note: Only one bit can be programmed as TOF.

9F

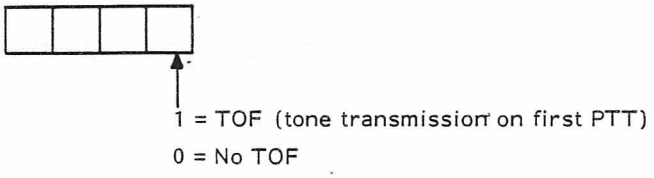

PUSH TO TALK ADMIT (PTA)

(0), (1), (2), (3)

The PUSH TO TALK ADMIT function specifies the criteria for push to talk:

0 = LS open or channel free
1 = Channel free
2 = LS open
3 = No limitations

The PTA is programmed in address 7F.

7F

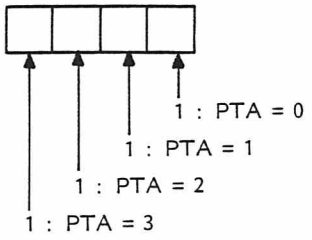

TONE KEY ADMIT (TKA)

(0), (1), (2), (3)

The TONE KEY ADMIT function specifies the criteria for Tone Key:

0 = LS open or channel free
1 = Channel free
2 = LS open
3 = No limitations

The TKA is programmed in address 8F.

8F

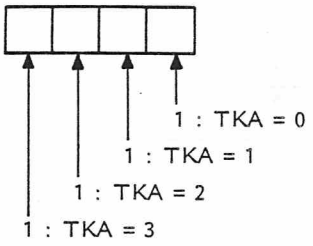

PRIVACY (PRI)

(Y), (N)

The PRIVACY function, if Y, specifies, that the loudspeaker cannot be manually opened.

The Privacy is programmed in address 9F and the privacy timer in address AF.

9F

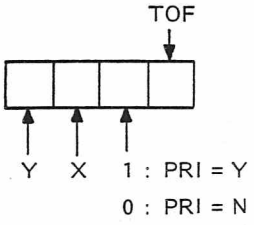

X: 1 = LS open after tone key activation
0 = LS not open after tone key activation
Refer to subfunction MAT

Y: 1 = LS off after channel shift
0 = LS status not changed after CH shift
Refer to subfunction MAC

Program the squelch function as described under function CCT.

• BREAK DOWN TIME

(BDT) = (2.4 - 38.4 sec.)

The BREAK DOWN TIME (Privacy timer) specifies the time from the RF carrier disappears and until automatic loudspeaker switch off.
The time is programmed in address AF in steps of 2.4 seconds, minimum being 2.4 seconds and maximum 38.4 seconds.

AF

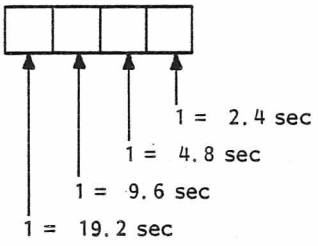

Example: BDT = 16.8

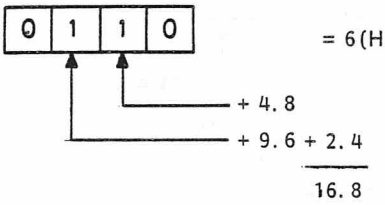

• MONITORING AFTER TONE TRANSMISSION

(MAT) = (Y), (N)

The MONITORING AFTER TONE TRANSMISSION subfunction, if Y, specifies that the loud-speaker is open after the tone key has been released.

The MAT subfunction is programmed in address 9F.

9F

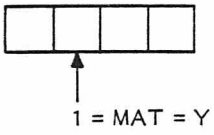

• MONITOR AFTER CHANNEL SHIFT

MAC = (Y), (N)

The MONITOR AFTER CHANNEL SHIFT subfunction specifies, if Y, that the channel is monitored for a period as specified for privacy.

The MAC subfunction is programmed in address 9F.

9F

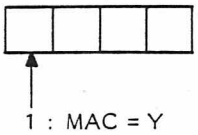

CARRIER CONTROL TIMER (CCT)

(10 - 160 sec), (N)

The CARRIER CONTROL TIMER specifies the maximum time of one transmission period.

The CCT function is programmed in address EF in steps of 10 seconds, minimum being 10 sec and maximum 160 seconds. (0 = 10 sec)

EF

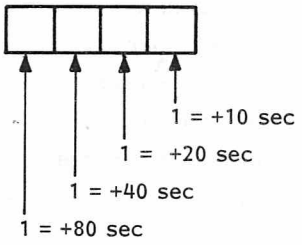

The resulting CCT time is the sum of the values programmed 1.+10 sec.

The CCT option is programmed in address DF, bit 0.

DF

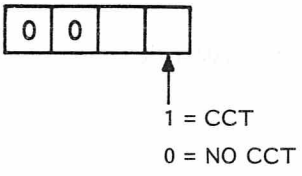

Bit 1 in address DF is programmed with the squelch function.

DF

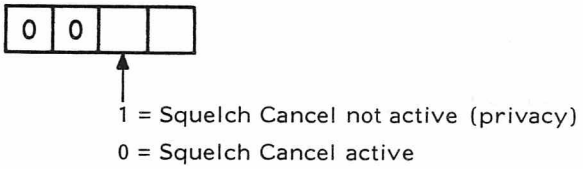

CHANNEL NUMBER (CHF)

(Channel number)

For each channel a channel MODE word must be programmed.

The channel mode words are programmed in addresses X7, (X = 0-9).

Channel	0	1	2	3	4	5	6	7	8	9
Address	07	17	27	37	47	57	67	77	87	97

x7

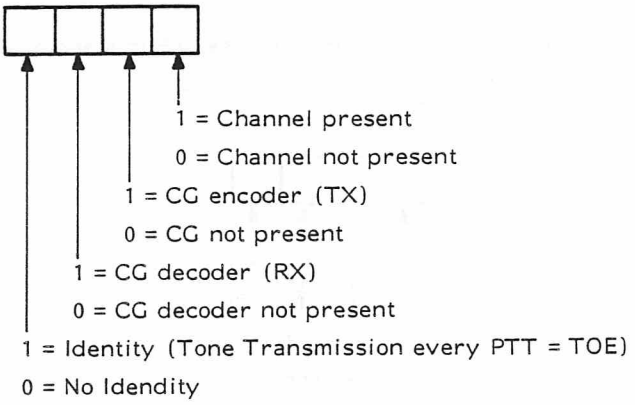

- **RECEIVER FREQUENCY**

(RXF) = (Receiver channel frequency)

Refer to: CHANNEL FREQUENCY PROGRAMMING

- **TRANSMITTER FREQUENCY**

(TXF) = (Transmitter channel frequency)

Refer to: CHANNEL FREQUENCY PROGRAMMING

- **CTCCS DECODER CODE**

(CGD) = (CG frequency in Hz)

The CHANNEL GUARD DECODER codes for all channels having channel guard are programmed in the addresses as follows:

Channel	0	1	2	3	4	5	6	7	8	9	DIVISION DATA
Address	A0	A1	A2	A3	A4	B0	B1	B2	B3	B4	LSD
Address	A8	A9	AA	AB	AC	B8	B9	BA	BB	BC	MSD

The channel guard data consists of two hexadecimal digits from the data table and are for channel 1 programmed in addresses:

A1 for the Least Significant Digit
and
A9 for the Most Significant Digit

Example: CGD = 91.5 (channel 1)

Addresses: A1 and A9
Divisor: 179
Data: B3 (Hex)

Address A1 = 3; A9 = B

CHANNEL GUARD DUMMY DATA

If the channel guard decoder is not used on all channels, a dummy value must be programmed as follows:

Address	Data
C6	0
CE	1

• CTCSS ENCODER CODE

(CGE) = (CG frequency in Hz)

The CHANNEL GUARD ENCODER CODE for all channels having channel guard are programmed in the addresses as follows:

Channel	0	1	2	3	4	5	6	7	8	9	DIVISION DATA
Address	C0	C1	C2	C3	C4	C8	C9	CA	CB	CC	LSD
Address	D0	D1	D2	D3	D4	D8	D9	DA	DB	DC	MSD

The channel guard data consist of two hexadecimal digits from the data table and are for channel 2 programmed in addresses.

C2 for the Least Significant Digit
D2 for the Most Significant Digit

Example: CGE = 131.8 (channel 2)

Addresses: C2 and D2
Divisor: 124
Data: 7C

Address C2 = C; D2 = 7

CHANNEL GUARD DUMMY DATA

If the channel guard encoder is not used on all channels a dummy value must be programmed as follows:

Address	Data
D6	D
DE	7

CHANNEL GUARD TONE DATA

CG TONE Hz	DIVISOR	DATA (HEX)
67.0	244	F4
71.9	227	E3
74.4	220	DC
77.0	212	D4
79.7	205	CD
82.5	198	C6
85.4	191	BF
88.5	185	B9
91.5	179	B3
94.8	172	AC
97.4	168	A8
100.0	163	A3
103.5	158	9E
107.2	152	98
110.9	147	93
114.8	142	8E
118.8	136	88

CG TONE Hz	DIVISOR	DATA (HEX)
123.0	133	85
127.3	128	80
131.8	124	7C
136.5	120	78
141.3	116	74
146.2	112	70
151.4	108	6C
156.7	104	68
162.2	101	65
167.9	97	61
173.8	94	5E
179.9	91	5B
186.2	88	58
192.8	85	55
203.5	80	50
210.7	78	4E

Formula: $$\frac{1600000\ \text{Hz}}{97.92 \times \text{CG Freq. in Hz}} = \text{Divisor}$$

Round up or down to nearest number without decimals.

The channel guard data consists of two hexadecimal digits from the data table and are for channel 1 programmed in addresses:

A1 for the Least Significant Digit
and
A9 for the Most Significant Digit

Example: CGD = 91.5 (channel 1)

Addresses: A1 and A9
Divisor: 179
Data: B3 (Hex)

Address A1 = 3; A9 = B

CHANNEL GUARD DUMMY DATA

If the channel guard decoder is not used on all channels, a dummy value must be programmed as follows:

Address	Data
C6	0
CE	1

• CTCSS ENCODER CODE

(CGE) = (CG frequency in Hz)

The CHANNEL GUARD ENCODER CODE for all channels having channel guard are programmed in the addresses as follows:

Channel	0	1	2	3	4	5	6	7	8	9	DIVISION DATA
Address	C0	C1	C2	C3	C4	D0	D1	D2	D3	D4	LSD
Address	C8	C9	CA	CB	CC	D8	D9	DA	DB	DC	MSD

The channel guard data consist of two hexadecimal digits from the data table and are for channel 2 programmed in addresses.

C2 for the Least Significant Digit
D2 for the Most Significant Digit

Example: CGE = 131.8 (channel 2)

Addresses: C2 and D2
Divisor: 124
Data: 7C

Address C2 = C; D2 = 7

CHANNEL GUARD DUMMY DATA

If the channel guard encoder is not used on all channels a dummy value must be programmed as follows:

Address	Data
D6	D
DE	7

CHANNEL GUARD TONE DATA

CG TONE Hz	DIVISOR	DATA (HEX)
67.0	244	F4
71.9	227	E3
74.4	220	DC
77.0	212	D4
79.7	205	CD
82.5	198	C6
85.4	191	BF
88.5	185	B9
91.5	179	B3
94.8	172	AC
97.4	168	A8
100.0	163	A3
103.5	158	9E
107.2	152	98
110.9	147	93
114.8	142	8E
118.8	136	88

CG TONE Hz	DIVISOR	DATA (HEX)
123.0	133	85
127.3	128	80
131.8	124	7C
136.5	120	78
141.3	116	74
146.2	112	70
151.4	108	6C
156.7	104	68
162.2	101	65
167.9	97	61
173.8	94	5E
179.9	91	5B
186.2	88	58
192.8	85	55
203.5	80	50
210.7	78	4E

Formula: $$\frac{1600000\ \text{Hz}}{97.92 \times \text{CG Freq. in Hz}} = \text{Divisor}$$

Round up or down to nearest number without decimals.

- TONE TRANSMISSION ON EVERY PTT

(TOE) = (Y), (N)

The subfunction TOE (Tone Transmission on every PTT) releases the telegram specified under PTR.

The TOE is programmed in address X7 (Channel mode)

x7

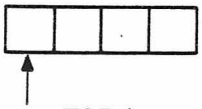

1 = TOE (tone transmission on every PTT)
0 = No TOE

NO ACOUSTIC FEEDBACK (NAF)

(Y), (N)

The NO ACOUSTIC FEEDBACK function specifies whether any entry on the keyboard is acknowledged by a loudspeaker beep or not.

If the Acoustic feedback is wanted (N) the loudspeaker beep is selected. If the beep has to be disabled the resistor R906 on the CL4002 is removed. Note that this also disables the alarm tone.

- ALARM

(ALM) = (0 - 7)

The ALM subfunction specifies the volume of the alarm tone for switch off and is programmed in address 5F.

The alarm tone volume can be programmed to one out of eight steps (0 - 7). Programming step 0 will not turn the alarm tone completely off.

5F

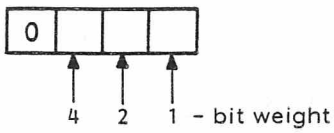

The selected alarm tone volume step is the sum of the bit weights programmed 1 (min. = 0:, max. = 7)

Example: ALM = 3

5F

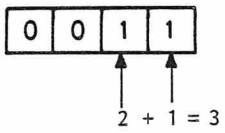

- ACOUSTIC ATTENTION LEVEL

(ACA) = (0 - 7)

The ACA subfunction specifies the volume of the ATTENTION AND CALL tone volume which can be programmed to one out of eight steps (0 - 7) in address 6F.

6F

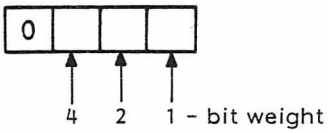

The selected attention tone volume step is the sum of the bit weights programmed 1 (min. = 0:, max. = 7).
Programming step 0 will not turn the attention tone completely off.

Example: ACA = 5

6F

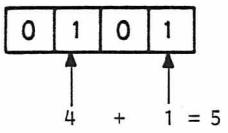

- CONTINUOUS ATTENTION TONE

(CAT) = (Y), (N)

The CAT subfunction specifies whether the CONTINUOUS ATTENTION TONE is selected or not.

The CAT subfunction is programmed in address FF.

FF

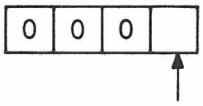

1 = CONTINUOUS ATTENTION TONE
0 = TIMED ATTENTION TONE

UNUSED ADDRESSES

The following addresses are not used and should be programmed 0 (HEX):

E0, E1, E2, E3, E4, E6, E8, E9, EA, EB, EC,
EE, F0, F1, F2, F3, F4, F8, F9, FA, FB, FC, FE.

MEMORY MAPPING

10 CHANNELS WITH TONE SIGNALLING

Address	Information	Binary Data	HEX
00	RX CH0 nibble 0		
01	RX CH0 nibble 1		
02	RX CH0 nibble 2		
03	RX CH0 nibble 3		
04	RX CH0 nibble 4		
05	Rec. telegram 1. tone		
06	Tone table tone 0 LSD		
07	Mode CH0		
08	TX CH0 nibble 0		
09	TX CH0 nibble 1		
0A	TX CH0 nibble 2		
0B	TX CH0 nibble 3		
0C	TX CH0 nibble 4		
0D	1. transm. telegr. 1. tone		
0E	Tone table tone 0 MSD		
0F	Mode 1		
10	RX CH1 nibble 0		
11	RX CH1 nibble 1		
12	RX CH1 nibble 2		
13	RX CH1 nibble 3		
14	RX CH1 nibble 4		
15	Rec. telegram 2. tone		
16	Tone table tone 1 LSD		
17	Mode CH1		
18	TX CH1 nibble 0		
19	TX CH1 nibble 1		
1A	TX CH1 nibble 2		
1B	TX CH1 nibble 3		
1C	TX CH1 nibble 4		
1D	1. transm. telegr. 2. tone		
1E	Tone table tone 1 MSD		
1F	Group tone position		
20	RX CH2 nibble 0		
21	RX CH2 nibble 1		
22	RX CH2 nibble 2		
23	RX CH2 nibble 3		
24	RX CH2 nibble 4		
25	Rec. telegram 3. tone		
26	Tone table tone 2 LSD		
27	Mode CH2		
28	TX CH2 nibble 0		
29	TX CH2 nibble 1		
2A	TX CH2 nibble 2		
2B	TX CH2 nibble 3		
2C	TX CH2 nibble 4		
2D	1. transm. telegr. 3. tone		
2E	Tone table tone 2 MSD		
2F	Preamble		

Address	Information	Binary Data	HEX
30	RX CH3 nibble 0		
31	RX CH3 nibble 1		
32	RX CH3 nibble 2		
33	RX CH3 nibble 3		
34	RX CH3 nibble 4		
35	Rec. telegram 4. tone		
36	Tone table tone 3 LSD		
37	Mode CH3		
38	TX CH3 nibble 0		
39	TX CH3 nibble 1		
3A	TX CH3 nibble 2		
3B	TX CH3 nibble 3		
3C	TX CH3 nibble 4		
3D	1. transm. telegr. 4. tone		
3E	Tone table tone 3 MSD		
3F	Tone timer		
40	RX CH4 nibble 0		
41	RX CH4 nibble 1		
42	RX CH4 nibble 2		
43	RX CH4 nibble 3		
44	RX CH4 nibble 4		
45	Rec. telegram 5. tone		
46	Tone table tone 4 LSD		
47	Mode CH4		
48	TX CH4 nibble 0		
49	TX CH4 nibble 1		
4A	TX CH4 nibble 2		
4B	TX CH4 nibble 3		
4C	TX CH4 nibble 4		
4D	1. transm. telegr. 5. tone		
4E	Tone table tone 4 MSD		
4F	Breakdown time		
50	RX CH5 nibble 0		
51	RX CH5 nibble 1		
52	RX CH5 nibble 2		
53	RX CH5 nibble 3		
54	RX CH5 nibble 4		
55	Rec. telegram 6. tone		
56	Tone table tone 5 LSD		
57	Mode CH5		
58	TX CH5 nibble 0		
59	TX CH5 nibble 1		
5A	TX CH5 nibble 2		
5B	TX CH5 nibble 3		
5C	TX CH5 nibble 4		
5D	1. transm. telegr. 6. tone		
5E	Tone table tone 5 MSD		
5F	Off volume level		

Address	Information	Binary Data	HEX
60	RX CH6 nibble 0		
61	RX CH6 nibble 1		
62	RX CH6 nibble 2		
63	RX CH6 nibble 3		
64	RX CH6 nibble 4		
65	Rec. telegram 7. tone		
66	Tone table tone 6 LSD		
67	Mode CH6		
68	TX CH6 nibble 0		
69	TX CH6 nibble 1		
6A	TX CH6 nibble 2		
6B	TX CH6 nibble 3		
6C	TX CH6 nibble 4		
6D	1. transm. telegr. 7. tone		
6E	Tone table tone 6 MSD		
6F	Alarm volume level		
70	RX CH7 nibble 0		
71	RX CH7 nibble 1		
72	RX CH7 nibble 2		
73	RX CH7 nibble 3		
74	RX CH7 nibble 4		
75	Rec. telegram (info)		
76	Tone table tone 7 LSD		
77	Mode CH7		
78	TX CH7 nibble 0		
79	TX CH7 nibble 1		
7A	TX CH7 nibble 2		
7B	TX CH7 nibble 3		
7C	TX CH7 nibble 4		
7D	1. transm. telegr. (info)		
7E	Tone table tone 7 MSD		
7F	Mode PTT		
80	RX CH8 nibble 0		
81	RX CH8 nibble 1		
82	RX CH8 nibble 2		
83	RX CH8 nibble 3		
84	RX CH8 nibble 4		
85	3. transm. telegr. 1. tone		
86	Tone table tone 8 LSD		
87	Mode CH8		
88	TX CH8 nibble 0		
89	TX CH8 nibble 1		
8A	TX CH8 nibble 2		
8B	TX CH8 nibble 3		
8C	TX CH8 nibble 4		
8D	2. transm. telegr. 1. tone		
8E	Tone table tone 8 MSD		
8F	Mode tonekey		

Address	Information	Binary Data	HEX
90	RX CH9 nibble 0		
91	RX CH9 nibble 1		
92	RX CH9 nibble 2		
93	RX CH9 nibble 3		
94	RX CH9 nibble 4		
95	3. transm. telegr. 2. tone		
96	Tone table tone 9 LSD		
97	Mode CH9		
98	TX CH9 nibble 0		
99	TX CH9 nibble 1		
9A	TX CH9 nibble 2		
9B	TX CH9 nibble 3		
9C	TX CH9 nibble 4		
9D	2. transm. telegr. 2. tone		
9E	Tone table tone 9 MSD		
9F	Mode 2		
A0	CGD CH0 (LSD)		
A1	CGD CH1 (LSD)		
A2	CGD CH2 (LSD)		
A3	CGD CH3 (LSD)		
A4	CGD CH4 (LSD)		
A5	3. transm. telegr. 3. tone		
A6	Tone table tone R LSD		
A7	Preamble definition		
A8	CGD CH0 (MSD)		
A9	CGD CH1 (MSD)		
AA	CGD CH2 (MSD)		
AB	CGD CH3 (MSD)		
AC	CGD CH4 (MSD)		
AD	2. transm. telegr. 3. tone		
AE	Tone table tone R MSD		
AF	Privacy timer		
B0	CGD CH5 (LSD)		
B1	CGD CH6 (LSD)		
B2	CGD CH7 (LSD)		
B3	CGD CH8 (LSD)		
B4	CGD CH9 (LSD)		
B5	3. transm. telegr. 4. tone		
B6	Tone table tone A LSD		
B7	TOF definition		
B8	CGD CH5 (MSD)		
B9	CGD CH6 (MSD)		
BA	CGD CH7 (MSD)		
BB	CGD CH8 (MSD)		
BC	CGD CH9 (MSD)		
BD	2. transm. telegr. 4. tone		
BE	Tone table tone A MSD		
BF	X10 max. value		

Address	Information	Binary Data	HEX
C0	CGE CH0 (LSD)		
C1	CGE CH1 (LSD)		
C2	CGE CH2 (LSD)		
C3	CGE CH3 (LSD)		
C4	CGE CH4 (LSD)		
C5	3. transm. telegr. 5. tone		
C6	Tonetable CG transm. LSD		
C7	Acknowledge definition		
C8	CGE CH0 (MSD)		
C9	CGE CH1 (MSD)		
CA	CGE CH2 (MSD)		
CB	CGE CH3 (MSD)		
CC	CGE CH4 (MSD)		
CD	2. transm. telegr. 5. tone		
CE	Tonetable CG transm. MSD		
CF	X10 min. value		
D0	CGE CH5 (LSD)		
D1	CGE CH6 (LSD)		
D2	CGE CH7 (LSD)		
D3	CGE CH8 (LSD)		
D4	CGE CH9 (LSD)		
D5	3. transm. telegr. 6. tone		
D6	Tone table CG rec. LSD		
D7	Prolonged definition		
D8	CGE CH5 (MSD)		
D9	CGE CH6 (MSD)		
DA	CGE CH7 (MSD)		
DB	CGE CH8 (MSD)		
DC	CGE CH9 (MSD)		
DD	2. transm. telegr. 6. tone		
DE	Tone table CG rec. MSD		
DF	CCT mode		

Address	Information	Binary Data	HEX
E0			0
E1			0
E2	Not used = 0		0
E3			0
E4			0
E5	3. transm. telegr. (info)		
E6	Not used		0
E7	Prolonged timer (dur)		
E8			0
E9			0
EA	Not used = 0		0
EB			0
EC			0
ED	2. transm. telegr. 7. tone		
EE	Not used = 0		0
EF	CCT timer		
F0			0
F1			0
F2	Not used = 0		0
F3			0
F4			0
F5	Ref. nibble 5		
F6	Ref. nibble 6		
F7	Ref. nibble 7		
F8			0
F9			0
FA	Not used = 0		0
FB			0
FC			0
FD	2. transm. telegr. (info)		
FE	Not used = 0		0
FF	Alarm time		

WORKSHEET CQP411X

RECEIVER	TRANSMITTER
f_{ant} : _____ KHz	f_{ant} : _____ KHz
$F_{vco} = f_{ant} \pm 21400$ kHz	$F_{vco} = f_{ant}$ kHz

A	$N1 = \frac{F_{vco}}{f_{ref} \times 40}$
B	N2= INT (N1) = N1, (xyz) Round down to nearest number without decimals
C	A1= 40 x (N1 - N2)

?

A1 ≥4 (4 - 39)		A1 <4 (0 - 3)	
D	N= N2	**D**	N= N2 - 1
E	A= A1	**E**	A= 40 x (N1 - N)
CONVERT N AND A TO HEX			

REFERENCE CRYSTAL	CHANNEL SPACING	F_{ref}	ADDRESS F5	F6	F7
6.4 MHz	10/20 kHz	10 kHz	0	8	2
	12.5/25 kHz	12.5 kHz	0	0	2
6.5 MHz	10/20 kHz	10 kHz	A	8	2
	12.5/25 kHz	12.5 kHz	8	0	2

		RECEIVER	TRANSMITTER
	f_{vco} =		
A	N1 =		
B	N2 =		
C	A1 =		

DECIMAL VALUES

D	N =		
E	A =		

CONVERT N TO HEX

N Address	x4	x3	x2	xC	xB	xA
N HEX	MSD	MD	LSD	MSD	MD	LSD

CONVERT A TO HEX

A Address	x1	x0	x9	x8
A HEX	MSD	LSD	MSD	LSD

"x" value is equivalent to the channel number minus 1 in 2 ch. version

"x" value is equivalent to the channel number in 10 ch. version.

60.786-E2

Storno

Storno

WORKSHEET CQP433X

RECEIVER	TRANSMITTER
f_{ant} : _____ KHz	f_{ant} : _____ KHz
$F_{vco} = f_{ant} \pm 21400$ kHz	$F_{vco} = f_{ant}$ kHz

A	$N1 = \frac{F_{vco}}{f_{ref} \times 40}$
B	N2= INT (N1) = N1, (xyz) Round down to nearest number without decimals
C	A1= 40 x (N1 - N2)

?

A1 ≥4 (4 - 39)		A1 <4 (0 - 3)	
D	N= N2	**D**	N= N2 - 1
E	A= A1	**E**	A= 40 x (N1 - N)
CONVERT N AND A TO HEX			

REFERENCE CRYSTAL	CHANNEL SPACING	F_{ref}	ADDRESS F5	F6	F7
6.4 MHz	10/20 kHz	5 kHz	0	0	5
	12.5/25 kHz	6.25 kHz	0	0	4
6.5 MHz	10/20 kHz	5 kHz	4	1	5
	12.5/25 kHz	6.25 kHz	0	1	4

		RECEIVER	TRANSMITTER
	f_{vco} =		
A	N1 =		
B	N2 =		
C	A1 =		

DECIMAL VALUES

D	N =		
E	A =		

CONVERT N TO HEX

N Address	x4	x3	x2	xC	xB	xA
N HEX	MSD	MD	LSD	MSD	MD	LSD

CONVERT A TO HEX

A Address	x1	x0	x9	x8
A HEX	MSD	LSD	MSD	LSD

"x" value is equivalent to the channel number minus 1 in 2 ch. version

"x" value is equivalent to the channel number in 10 ch. version.

60.787-E2

Storno

Storno

WORKSHEET CQP466X

RECEIVER	TRANSMITTER
f_{ant} : _____ KHz	f_{ant} : _____ KHz
$F_{vco} = f_{ant} \pm 21400$ kHz	$F_{vco} = f_{ant}$ kHz

A	$N1 = \frac{F_{vco}}{f_{ref} \times 64}$
B	N2= INT (N1) = N1, (xyz) Round down to nearest number without decimals
C	A1= 64 x (N1 - N2)

?

A1 ≥4 (4 - 63)		A1 <4 (0 - 3)	
D	N= N2	**D**	N= N2 - 1
E	A= A1	**E**	A= 64 x (N1 - N)
CONVERT N AND A TO HEX			

REFERENCE CRYSTAL	CHANNEL SPACING	F_{ref}	ADDRESS F5	F6	F7
6.4 MHz	10/20 kHz	10 kHz	0	8	2
	12.5/25 kHz	12.5 kHz	0	0	2
6.5 MHz	10/20 kHz	10 kHz	A	8	2
	12.5/25 kHz	12.5 kHz	8	0	2

		RECEIVER	TRANSMITTER
	f_{vco} =		
A	N1 =		
B	N2 =		
C	A1 =		

DECIMAL VALUES

D	N =		
E	A =		

CONVERT N TO HEX

N Address	x4	x3	x2	xC	xB	xA
N HEX	MSD	MD	LSD	MSD	MD	LSD

CONVERT A TO HEX

A Address	x1	x0	x9	x8
A HEX	MSD	LSD	MSD	LSD

"x" value is equivalent to the channel number minus 1 in 2 ch. version

"x" value is equivalent to the channel number in 10 ch. version.

60.788-E2

GROUP CALL/ALL CALL

The group/all call tone is determined by the TQ4000 module used in the radio, refer to tone system table 60.796-E1 p.2.

GROUP-CALL

When the TQ unit used has a group tone decoder, the position of the group tone in the DEC telegram is selected by programming the address 1F.

ex: group tone on 3rd tone

Address

1F | 0 | 0 | 1 | 1 | 3_H must be programmed

The hex value must never exceed the number of tones programmed in the DEC telegram.

group call hex values: from 2_H to 7_H

ALL-CALL

To obtain all-call facilities, the hex value 1_H has to be programmed in the address 1F.

Address

1F | 0 | 0 | 0 | 1 | means ALL CALL

Note: A hardware modification on the TQ unit is necessary to obtain all-call facilities. (see Adjustment of Tone Module).

CHANNEL GUARD

DUMMY DATA

If channel guard is not used, a dummy value must be programmed:

Address	Data (Hex)
C6	0
CE	1

CHANNEL GUARD PROGRAMMING

CG TONE Hz	DIVISOR	DATA (HEX)
67.0	244	F4
71.9	227	E3
74.4	220	DC
77.0	212	D4
79.7	205	CD
82.5	198	C6
85.4	191	BF
88.5	185	B9
91.5	179	B3
94.8	172	AC
97.4	168	A8
100.0	163	A3
103.5	158	9E
107.2	152	98
110.9	147	93
114.8	142	8E
118.8	136	88

CG TONE Hz	DIVISOR	DATA (HEX)
123.0	133	85
127.3	128	80
131.8	124	7C
136.5	120	78
141.3	116	74
146.2	112	70
151.4	108	6C
156.7	104	68
162.2	101	65
167.9	97	61
173.8	94	5E
179.9	91	5B
186.2	88	58
192.8	85	55
203.5	80	50
210.7	78	4E

Formula: $$\frac{1600000\ \text{Hz}}{97.92 \times \text{CG Freq. in Hz}} = \text{Divisor}$$

Round up or down to nearest number without decimals.

The data in hexadecimal code must be progaammed as follows:

CG ENCODER		CG DECODER	
Addr.	Data (Hex)	Addr	Data (Hex)
C6	LSD	D6	LSD
CE	MSD	DE	MSD

CHANNEL GUARD TONE DATA

CG TONE Hz	DIVISOR	DATA (HEX)
67.0	244	F4
71.9	227	E3
74.4	220	DC
77.0	212	D4
79.7	205	CD
82.5	198	C6
85.4	191	BF
88.5	185	B9
91.5	179	B3
94.8	172	AC
97.4	168	A8
100.0	163	A3
103.5	158	9E
107.2	152	98
110.9	147	93
114.8	142	8E
118.8	136	88

CG TONE Hz	DIVISOR	DATA (HEX)
123.0	133	85
127.3	128	80
131.8	124	7C
136.5	120	78
141.3	116	74
146.2	112	70
151.4	108	6C
156.7	104	68
162.2	101	65
167.9	97	61
173.8	94	5E
179.9	91	5B
186.2	88	58
192.8	85	55
203.5	80	50
210.7	78	4E

Formula: $\frac{1600000 \text{ Hz}}{97.92 \times \text{CG Freq. in Hz}} = \text{Divisor}$

Round up or down to nearest number without decimals.

ACOUSTIC ALERT LEVEL

The acoustic alert level represents the volume of the emitted tone when the battery tension is low, and the radio turns off automatically.

Address	Data	
5F	0	Low level
	1	Intermediate steps
	2	
	3	
	4	
	5	
	6	
	7	High level

If the volume of the acoustic alert tone is not specified (ACA= x) the default value is 6.

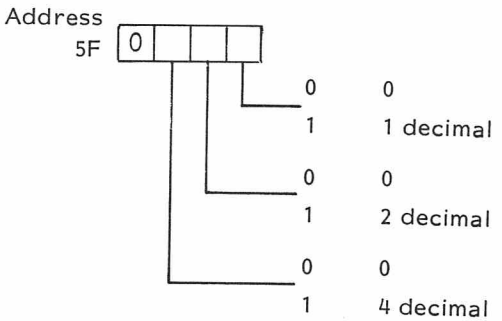

ex: programming step 5

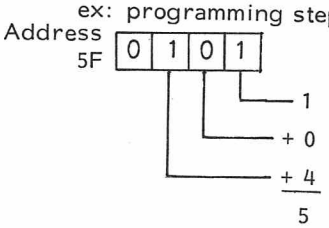

CHAPTER 6a

LOGIC CIRCUITS

CONTROL LOGIC BOARDS CL4001-2, 2/10 CHANNELS VERSION

- CIRCUIT DESCRIPTION
- FUNCTIONAL DIAGRAM
- CL4001, 2 CHANNELS VERSION
- CL4002, 10 CHANNELS VERSION

CL4001/CL4002

CONTROL LOGIC BOARD

The control board assume all the control functions of the radio. The different circuits are as follows:

- Central control functions
  - microcontroller
  - personality PROM
- Volume and RX/TX control
- Audio power amplifier
- TX audio processor
- Display control
- Tone control
- Other functions

CL4001 and CL4002 are nearly similar physically, there is one more latch driver to control the display in CL4002. But their functions are different due to the software programming.
(see programming manual).

CONTROL FUNCTIONS

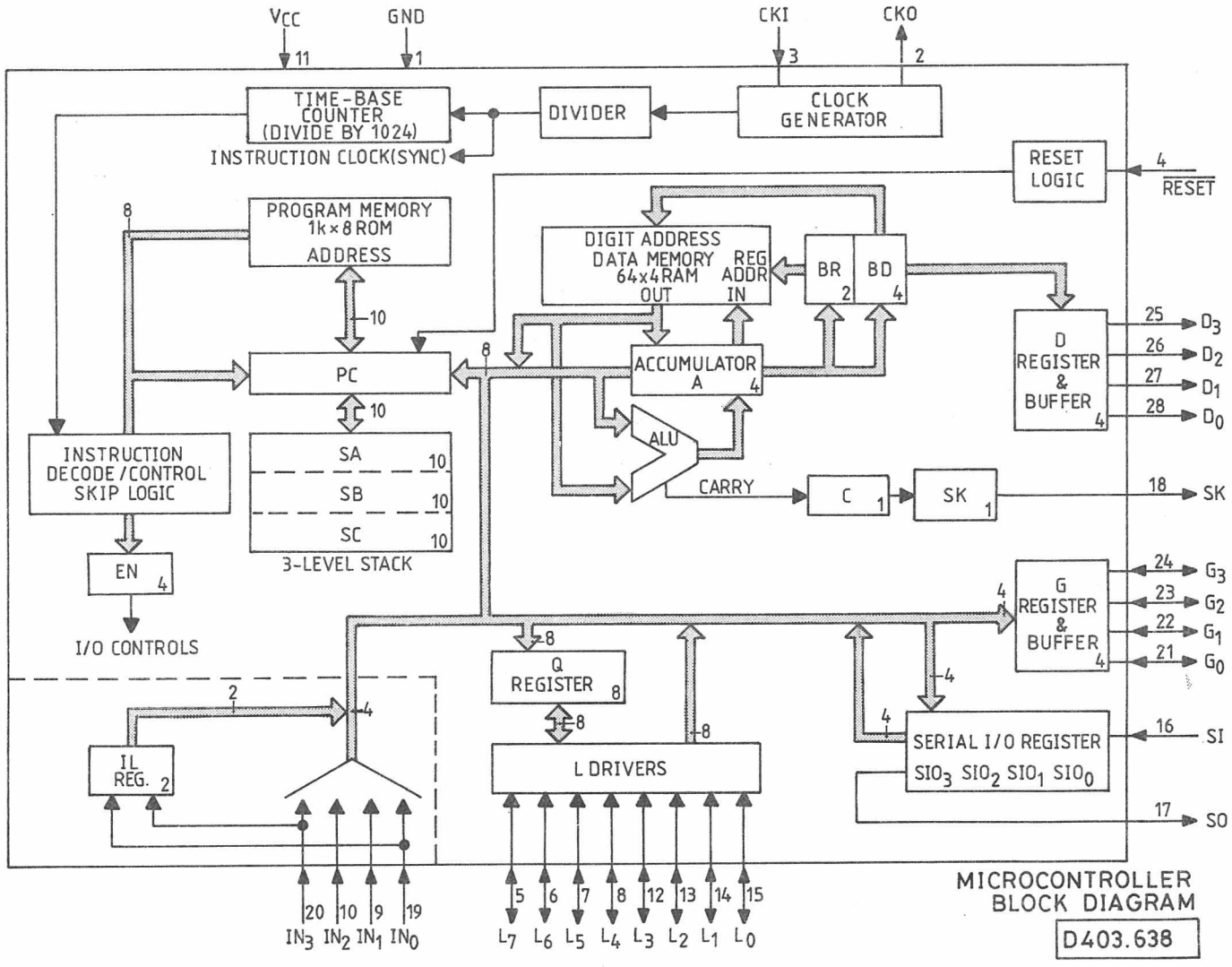

MICROCONTROLLER

The microcontroller is a mask programmed microprocessor containing an accumulator, several registers and a 1 K byte ROM. The controlling program is stored in the ROM.

Internally, the microcontroller has:

- a 64 x 4 bits RAM:
  containing informations on volume setting, RX/TX mode, tones (if TQ or CG are used). Diverse counters used for the CL board are contained in the RAM.

- 8 bidirectional lines L0 to L7:
  these are 8 outputs addressing the personality PROM, the synthesizer and the display circuits.
  4 of the lines are used for input informations.

- 4 bidirectional lines G0 to G3:
  these are only used as output control lines.

- 4 output lines D0 to D3:
  these are used for display scanning, radio ON/OFF and selection functions.

- serial input and output register:
  the output can be synchronized with the carry signal.

- 4 interrupt lines:
  which are build up in two interrupt levels.

PERSONALITY PROM

All informations related to the individual radio are programmed into a 256x4 bipolar PROM. These are informations such as: channel frequencies, channel spacing and tone options.

To reduce power consumption, the PROM is only turned on when addressed by the microcontroller.

For further details see the Programming manual.

VOLUME AND RX/TX CONTROL

OUTPUT EXPANDER/SIPO (U901)

The sipo is an 8 bits register. The informations are serially clocked in. By selecting the register, the information is transferred to the 8 serial lines.

Output lines:

- 1 line selecting volume control (D8)
- 3 lines addressing the volume control (D5, D6, D7).
- 1 line selecting audio amplifier (D3).
- 1 line selecting RX/$\overline{\text{TX}}$ mode (D4).
- 1 line selecting microphone (D2).
- 1 line for tone transmit (D1).

VOLUME CONTROL (U702)

The volume control circuit is built around an analog FET multiplexer. The volume control has 8 steps of 5 dB each.
When the radio is turned on, volume setting has the default value 4 which can be changed by activating the key-board.
The output of the multiplexer is fed to the audio amplifier.

RX/TX FUNCTIONS

The CL board switches from RX to TX mode by 3 informations coming from the SIPO.

By means of D4, Q901 is turned on delivering 5.5 V for the transmit part of the RF board. The transmit symbol on the display is turned on by the same process.

D2 turns on Q801 delivering +5.5 V to the electret microphone when the PTT key is depressed.

D1 is only active when the tone key is pressed. D1 delivers 5.5 V to the transmit part of the tone module (TQ or CG).

AUDIO POWER AMPLIFIER

(U701 with associated components)

The audio power amplifier is a 500 mW amplifier containing a deemphasis circuit, an amplifier and a band-pass filter avoiding low and high frequencies (300-3000 Hz) to pass through to the loudspeaker.
U701 is only under power when selected by the microcontroller via the SIPO.

TX AUDIO PROCESSOR

(U801, Q802, Q803, Q804 and associated components)

When the microcontroller switches the RF board from RX to TX mode, 5.5 V is delivered to the TX audio processor.
The audio processor contains the following circuits:

- a microphone amplifier with an input high-pass filter. The gain of the amplifier is fixed and can only be changed by replacing R805.

- an active deemphasis circuit:
  built around Q802, Q803 and Q804.
  The circuit output is delivered to the potentiometer R812, by which the maximum deviation can be adjusted.

- an active limiter combined with low-pass filter avoiding harmonics from microphone signals.
  The upper limit of the circuit, 3000 Hz, can be modified to 2550 Hz by cutting the resistor R818.
  The output of the limiter is fed to the TX VCO on the RF board.

DISPLAY, TONE AND OTHER FUNCTIONS

DISPLAY CONTROL

The LCD display contains 3 seven-segment digits and 5 separate symbols. It is illuminated by 4 green LED's.

Three IC's are used to latch the data and drive the LCD-display.
A clock generator gives approximately 40 Hz pulses for the display.
The display drivers are controlled directly by the microcontroller (4 lines).

TONE CONTROL

The tone sequence from the TQ module is delivered to the deemphasis circuit. The channel guard frequency is delivered directly to the limiter through a potentiometer, R824, for channel guard deviation adjustment. The deviation must be 500 Hz without microphone signal.

OTHER FUNCTIONS

These are:

- ON/OFF
- Transmit signal
- Frequency synthesizer control
- Lock detect function
- Tone detect
- Battery control

Storno

CL4001/CL4002

CONTROL LOGIC BOARD

The control board assume all the control functions of the radio. The different circuits are as follows:

- Central control functions
  - microcontroller
  - personality PROM
- Volume and RX/TX control
- Audio power amplifier
- TX audio processor
- Display control
- Tone control
- Other functions

CL4001 and CL4002 are nearly similar physically, there is one more latch driver to control the display in CL4002. But their functions are different due to the software programming.
(see programming manual).

CONTROL FUNCTIONS

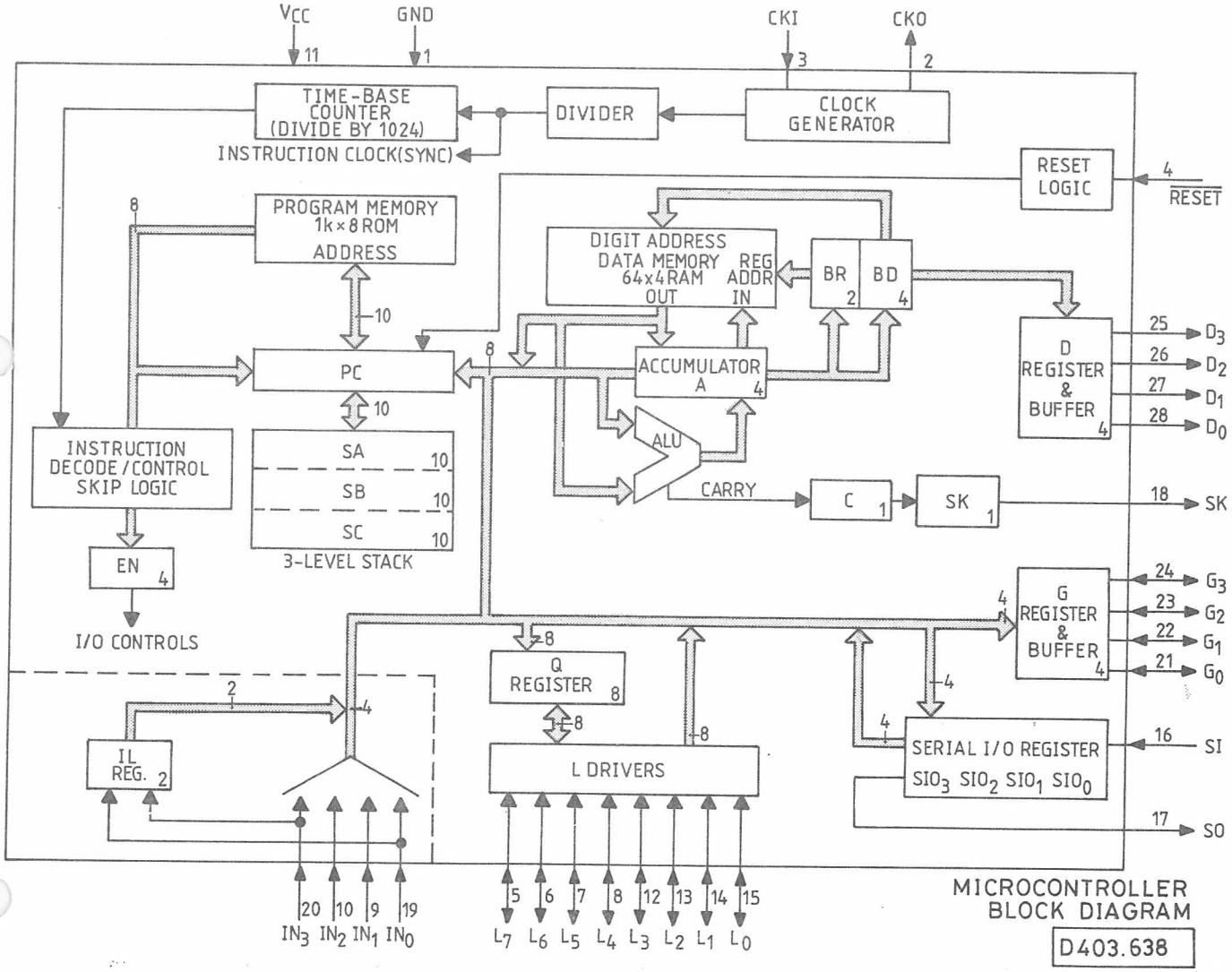

MICROCONTROLLER

The microcontroller is a mask programmed microprocessor containing an accumulator, several registers and a 1 K byte ROM. The controlling program is stored in the ROM.

Internally, the microcontroller has:

- a 64 x 4 bits RAM:
  containing informations on volume setting, RX/TX mode, tones (if TQ or CG are used). Diverse counters used for the CL board are contained in the RAM.

- 8 bidirectional lines L0 to L7:
  these are 8 outputs addressing the personality PROM, the synthesizer and the display circuits.
  4 of the lines are used for input informations.

- 4 bidirectional lines G0 to G3:
  these are only used as output control lines.

- 4 output lines D0 to D3:
  these are used for display scanning, radio ON/OFF and selection functions.

- serial input and output register:
  the output can be synchronized with the carry signal.

- 4 interrupt lines:
  which are build up in two interrupt levels.

PERSONALITY PROM

All informations related to the individual radio are programmed into a 256x4 bipolar PROM. These are informations such as: channel frequencies, channel spacing and tone options.

To reduce power consumption, the PROM is only turned on when addressed by the microcontroller.

For further details see the Programming manual.

VOLUME AND RX/TX CONTROL

OUTPUT EXPANDER/SIPO (U901)

The sipo is an 8 bits register. The informations are serially clocked in. By selecting the register, the information is transferred to the 8 serial lines.

Output lines:
- 1 line selecting volume control (O8)
- 3 lines addressing the volume control (O5, O6, O7)
- 1 line selecting audio amplifier (O3).
- 1 line selecting RX/$\overline{TX}$ mode (O4).
- 1 line selecting microphone (O2).
- 1 line for tone transmit (O1).

VOLUME CONTROL (U702)

The volume control circuit is built around an analog FET multiplexer. The volume control has 8 steps of 5 dB each.
When the radio is turned on, volume setting has the default value 4 which can be changed by activating the key-board.
The output of the multiplexer is fed to the audio amplifier.

RX/TX FUNCTIONS

The CL board switches from RX to TX mode by 3 informations coming from the SIPO.

By means of O4, Q901 is turned on delivering 5.5 V for the transmit part of the RF board. The transmit symbol on the display is turned on by the same process.

O1 turns on Q801 delivering +5.5 V to the electret microphone when the PTT key is depressed.

O2 is only active when the tone key is pressed. O2 delivers 5.5 V to the transmit part of the tone module (TQ or CG).

AUDIO POWER AMPLIFIER

(U701 with associated components)

The audio power amplifier is a 500 mW amplifier containing a deemphasis circuit, an amplifier and a band-pass filter avoiding low and high frequencies (300-3000 Hz) to pass through to the loudspeaker.
U701 is only under power when selected by the microcontroller via the SIPO.

TX AUDIO PROCESSOR

(U801, Q802, Q803, Q804 and associated components)

When the microcontroller switches the RF board from RX to TX mode, 5.5 V is delivered to the TX audio processor.
The audio processor contains the following circuits:

- a microphone amplifier with an input high-pass filter. The gain of the amplifier is fixed and can only be changed by replacing R805.

- an active deemphasis circuit:
  built around Q802, Q803 and Q804.
  The circuit output is delivered to the potentiometer R812, by which the maximum deviation can be adjusted.

- an active limiter combined with low-pass filter avoiding harmonics from microphone signals.
  The upper limit of the circuit, 3000 Hz, can be modified to 2550 Hz by cutting the resistor R818.
  The output of the limiter is fed to the TX VCO on the RF board.

DISPLAY, TONE AND OTHER FUNCTIONS

DISPLAY CONTROL

The LCD display contains 3 seven-segment digits and 5 separate symbols. It is illuminated by 4 green LED's.

Three IC's are used to latch the data and drive the LCD-display.
A clock generator gives approximately 40 Hz pulses for the display.
The display drivers are controlled directly by the microcontroller (4 lines).

TONE CONTROL

The tone sequence from the TQ module is delivered to the deemphasis circuit. The channel guard frequency is delivered directly to the limiter through a potentiometer, R824, for channel guard deviation adjustment. The deviation must be 500 Hz without microphone signal.

OTHER FUNCTIONS

These are:

- ON/OFF
- Transmit signal
- Frequency synthesizer control
- Lock detect function
- Tone detect
- Battery control

Storno

Storno

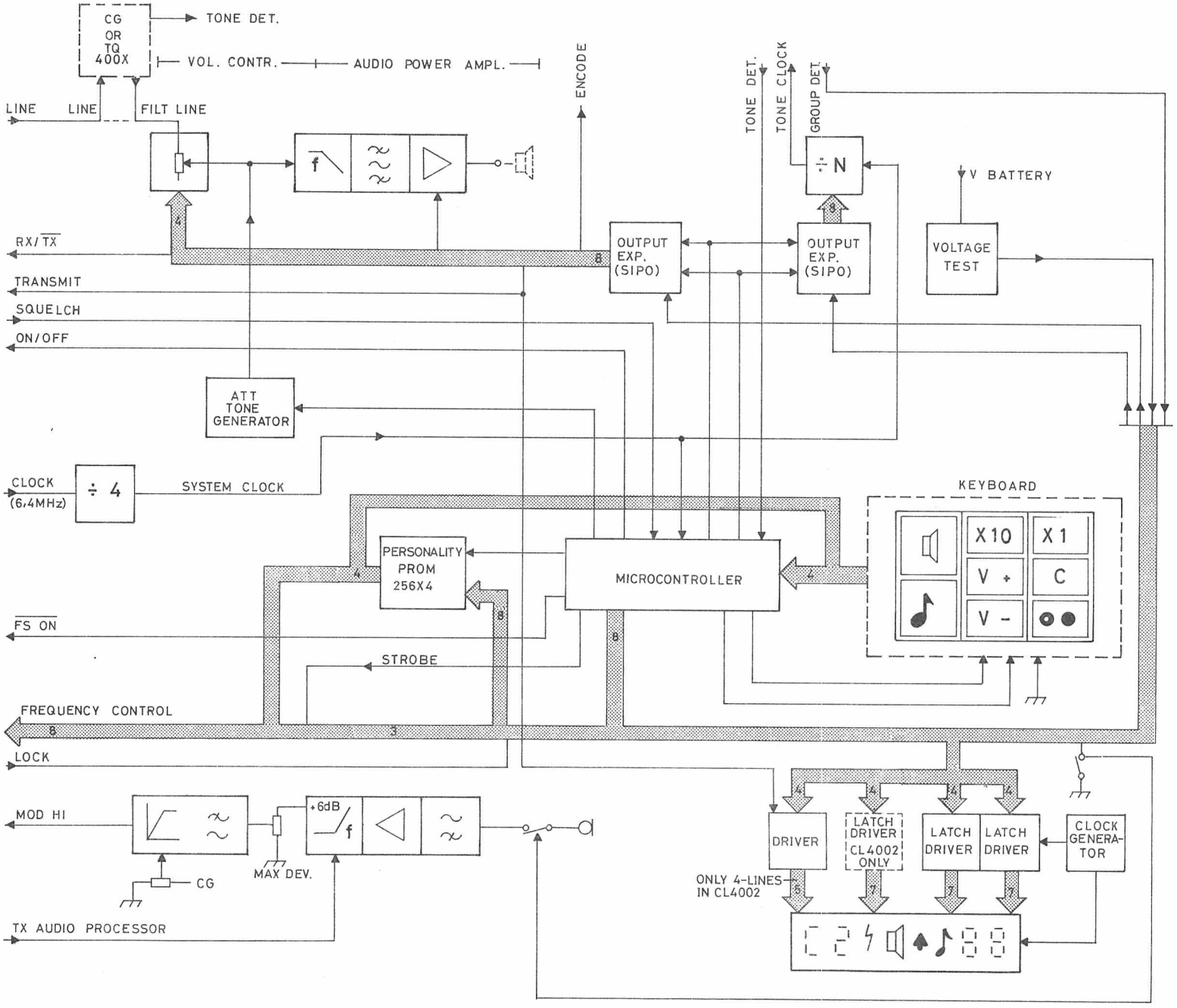

FUNCTIONAL DIAGRAM
CL4001/CL4002

D403.633

Storno

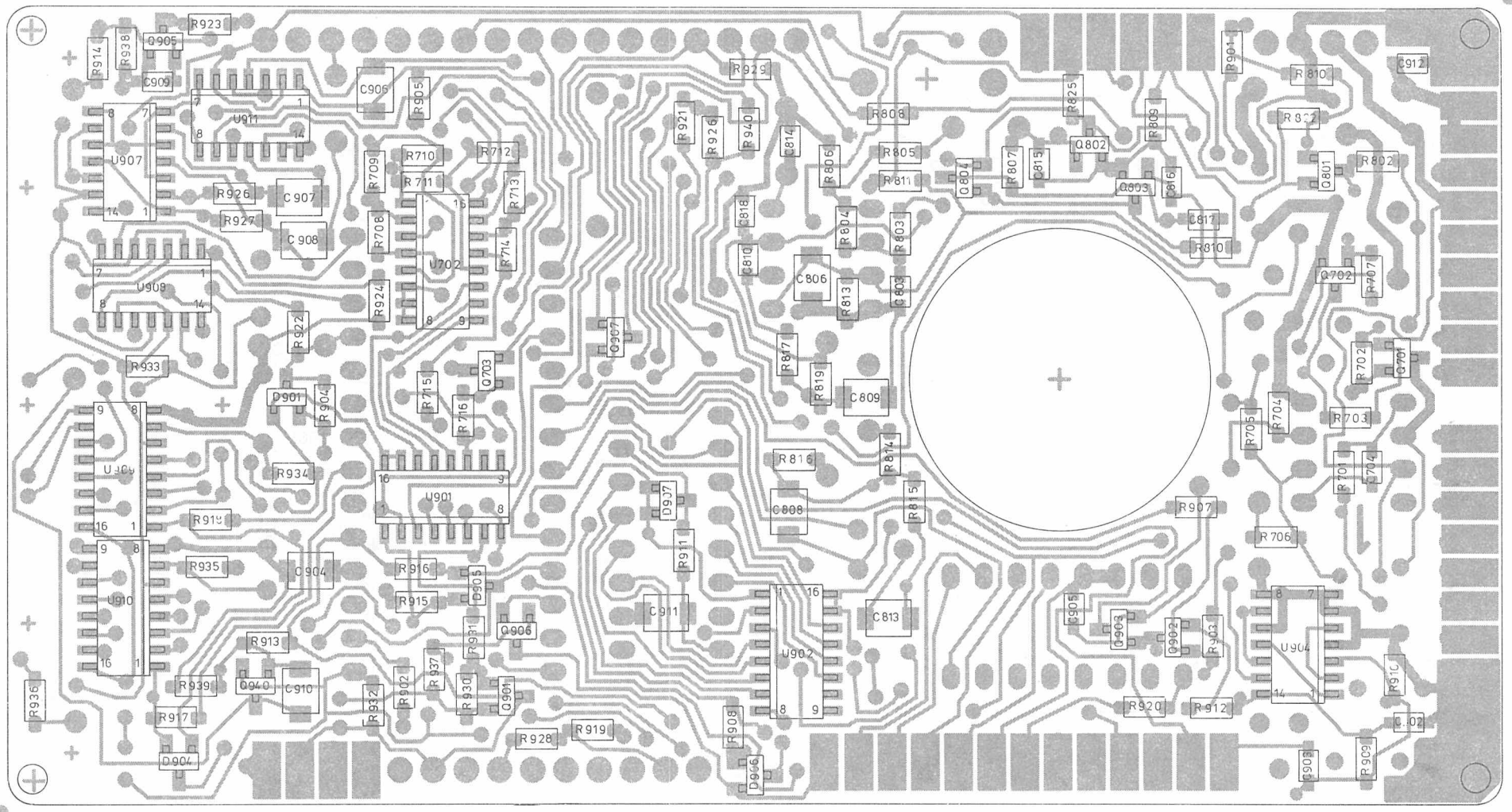

CONTROL LOGIC CL4001
COMPONENT LAYOUT

D403.312

Storno

Storno

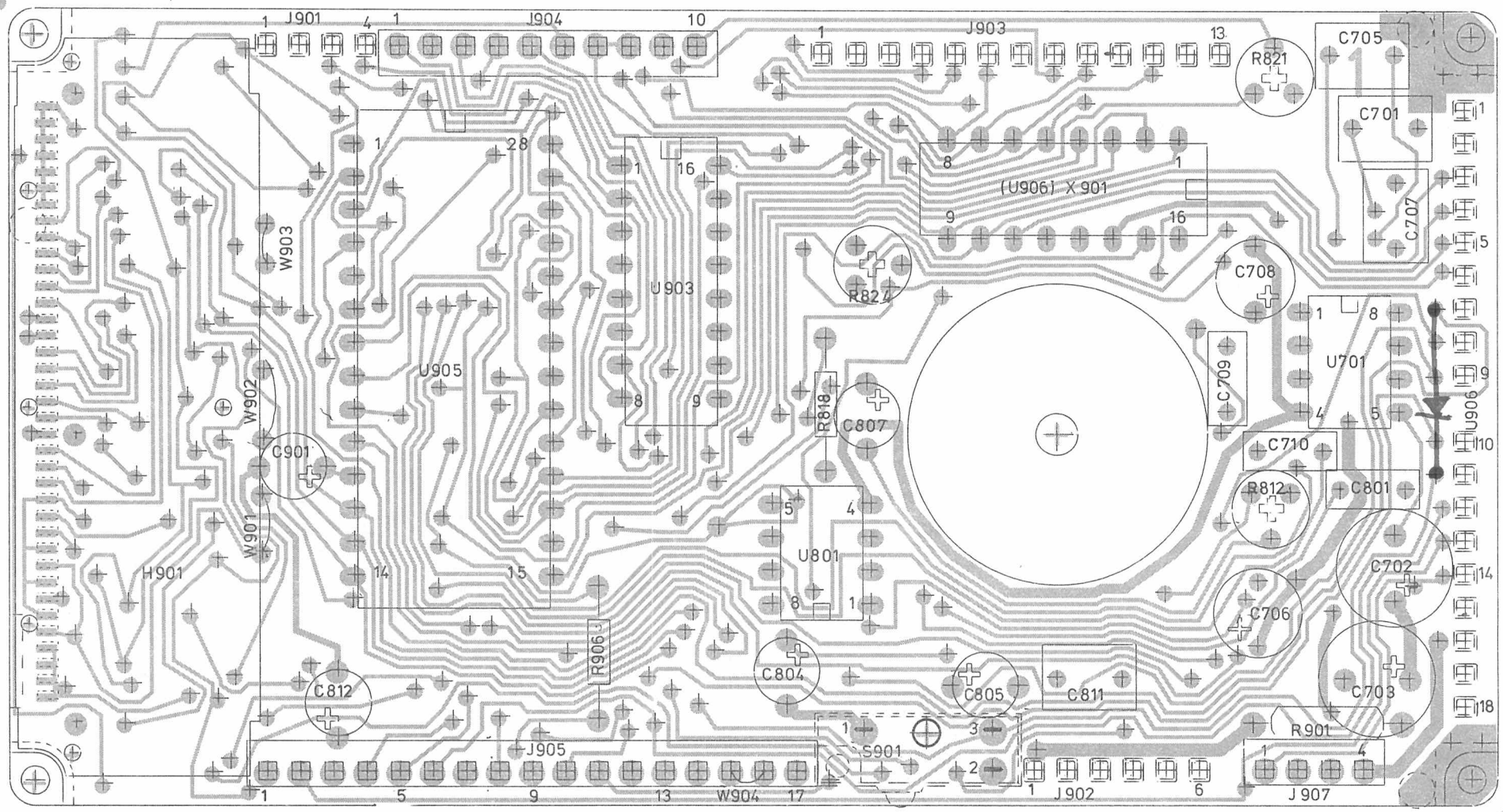

CONTROL LOGIC CL4001
COMPONENT LAYOUT

D403.311

Storno

Storno

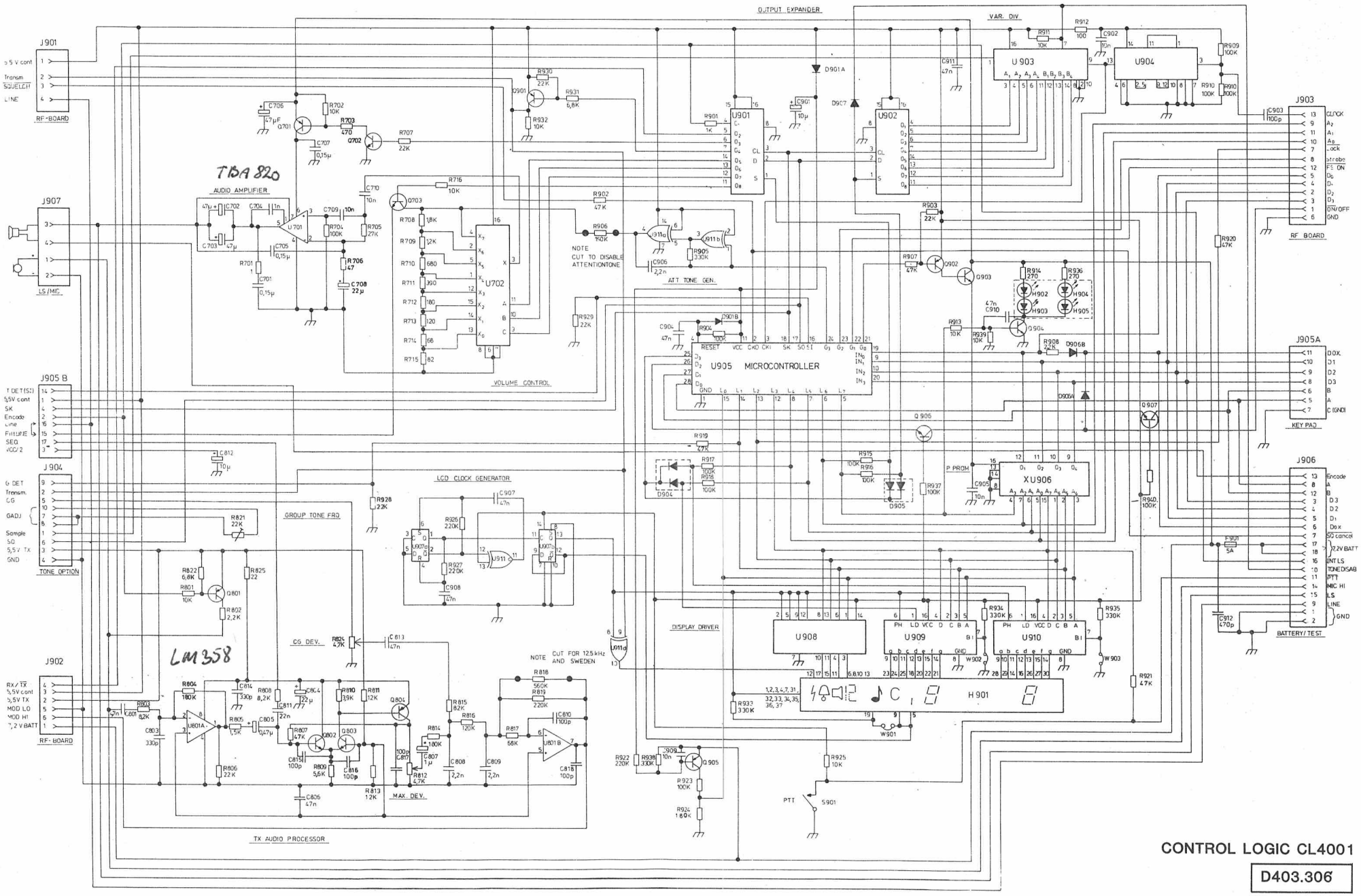

CONTROL LOGIC CL4001

D403.306

Storno

Nº	CODE	DATA		
C701	J707412P10	0.15 MF	POL	
C702	J707444P17	47 MF	TA	10 V
C703	J707444P17	47 MF	TA	10 V
C704	J707438P5	1 NF	CER	50 V
C705	J707412P10	0.15 MF	POL	
C706	J707353P9	47 MF	ELEC	16 V
C707	J707412P10	0.15 MF	POL	
C708	J707444P8	22 MF	TA	16 V
C709	J707412P3	10 NF	POL	
C710	J707412P3	10 NF	POL	
C801	J707412P1	4.7 NF	POL	
C803	J707436P73	330 PF	CER	
C804	J707444P8	22 MF	TA	16 V
C805	J707444P3	0.47 MF	TA	35 V
C806	J707438P22	47 NF	CER	50 V
C807	J707353P4	1 MF	ELEC	50 V
C808	J707436P93	2.2 NF	CER	50 V
C809	J707436P93	2.2 NF	CER	50 V
C810	J707436P61	100 PF	CER	50 V
C811	J707412P5	22 NF	POL	
C812	J707353P7	10 MF	ELEC	10 V
C813	J707438P22	47 NF	CER	50 V
C814	J707436P73	330 PF	CER	50 V
C815	J707436P61	100 PF	CER	50 V
C816	J707436P61	100 PF	CER	50 V
C817	J707436P61	100 PF	CER	50 V
C819	J707436P61	100 PF	CER	50 V
C901	J707353P7	10 MF	ELEC	10 V
C902	J707438P14	10 NF	CER	
C903	J707436P61	100 PF	CER	50 V
C904	J707438P22	47 NF	CER	50 V
C905	J707438P14	10 NF	CER	
C906	J707436P93	2.2 NF	CER	50 V
C907	J707438P22	47 NF	CER	50 V
C908	J707438P22	47 NF	CER	50 V
C909	J707438P14	10 NF	CER	50 V
C910	J707438P22	47 NF	CER	50 V
C911	J707438P22	47 NF	CER	50 V
C912	J707438P3	470 PF	CER	50 V
D901	J707390P1	BAV74	DIO SI	
D905	J707390P1	BAV74	DIO SI	
D906	J707390P1	BAV74	DIO SI	

Storno

Nº	CODE	DATA		
D907	J707390P1	BAV74	DIO SI	
F901	J707468P11	5 A	FUSE	
Q901	J707387P1	BCW30	TSTR	
Q902	J707387P1	BCW30	TSTR	
Q903	J707429P1	BCX29	TSTR	
Q904	J707386P1	BCW32	TSTR	
Q905	J707387P1	BCW30	TSTR	
Q906	J707386P1	BCW32	TSTR	
Q907	J707386P1	BCW32	TSTR	
R701	J707385P910	1 ohm	MFILM	0.125 W
R702	J707385P103	10 Kohm	MFILM	0.125 W
R703	J707385P471	470 ohm	MFILM	0.125 W
R704	J707385P104	100 Kohm	MFILM	0.125 W
R705	J707385P273	27 Kohm	MFILM	0.125 W
R706	J707385P470	47 ohm	MFILM	0.125 W
R707	J707385P223	22 Kohm	MFILM	0.125 W
R708	J707385P182	1.8 Kohm	MFILM	0.125 W
R709	J707385P122	1.2 Kohm	MFILM	0.125 W
R710	J707385P681	680 ohm	MFILM	0.125 W
R711	J707385P391	390 ohm	MFILM	0.125 W
R712	J707385P181	180 ohm	MFILM	0.125 W
R713	J707385P121	120 ohm	MFILM	0.125 W
R714	J707385P680	68 ohm	MFILM	0.125 W
R715	J707385P820	82 ohm	MFILM	0.125 W
R716	J707385P103	10 Kohm	MFILM	0.125 W
R801	J707385P103	10 Kohm	MFILM	0.125 W
R802	J707385P222	2.2 Kohm	MFILM	0.125 W
R803	J707385P822	8.2 Kohm	MFILM	0.125 W
R804	J707385P184	180 Kohm	MFILM	0.125 W
R805	J707385P152	1.5 Kohm	MFILM	0.125 W
R806	J707385P223	22 Kohm	MFILM	0.125 W
R807	J707385P473	47 Kohm	MFILM	0.125 W
R808	J707385P822	8.2 Kohm	MFILM	0.125 W
R809	J707385P562	5.6 Kohm	MFILM	0.125 W
R810	J707385P392	3.9 Kohm	MFILM	0.125 W
R811	J707385P123	12 Kohm	MFILM	0.125 W
R812	J707478P8	4.7 Kohm	VAR	0.05 W
R813	J707385P123	12 Kohm	MFILM	0.125 W
R814	J707385P184	180 Kohm	MFILM	0.125 W
R815	J707385P823	82 Kohm	MFILM	0.125 W
R816	J707385P124	120 Kohm	MFILM	0.125 W
R817	J707385P683	68 Kohm	MFILM	0.125 W

CONTROL LOGIC CL4001

X403.360

Nº	CODE	DATA		
R818	J707476P58	560 Kohm	DEPOS	0.1 W
R819	J707385P224	220 Kohm	MFILM	0.125 W
R821	J707478P12	22 Kohm	VAR	0.05 W
R822	J707385P682	6.8 Kohm	MFILM	0.125 W
R824	J707478P8	4.7 Kohm	VAR	0.05 W
R825	J707385P220	22 ohm	MFILM	0.125 W
R934	J707385P334	330 Kohm	MFILM	0.125 W
R935	J707385P334	330 Kohm	MFILM	0.125 W
R936	J707385P271	270 ohm	MFILM	0.125 W
R937	J707385P104	100 Kohm	MFILM	0.125 W
R938	J707385P334	330 Kohm	MFILM	0.125 W
R939	J707385P103	10 Kohm	MFILM	0.125 W
R940	J707385P104	100 Kohm	MFILM	0.125 W
U701	J707451P1	TBA 820M	IC	
U702	J707434P1	4051/S016	IC	
U801	J707450P1	LM358	IC	
U901	J707243P1	4094/S016	IC	
U902	J707243P1	4094/S016	IC	
U903	J707322P1	14569	IC	
U904	J707242P2	4013/S014	IC	
U905	19A701695P300	COP320C	IC	
U906	J707417P1	MM17611A-2	IC, PROM	256x4
U906	J707417P1	S82S129F	IC, PROM	256x4
U906	J707417P1	MM15301-13	IC, PROM	256x4
U907	J707242P1	4013/S014	IC	
U908	J707464P1	4070/S014	IC	
U909	J707264P1	4543/S016	IC	
U910	J707264P1	4543/S016	IC	
U911	J707464P1	4070/S014	IC	
X901	J706356P4		SOC	16 PIN

Storno

Nº	CODE	DATA

CONTROL LOGIC CL4001

X403.360

Storno

Storno

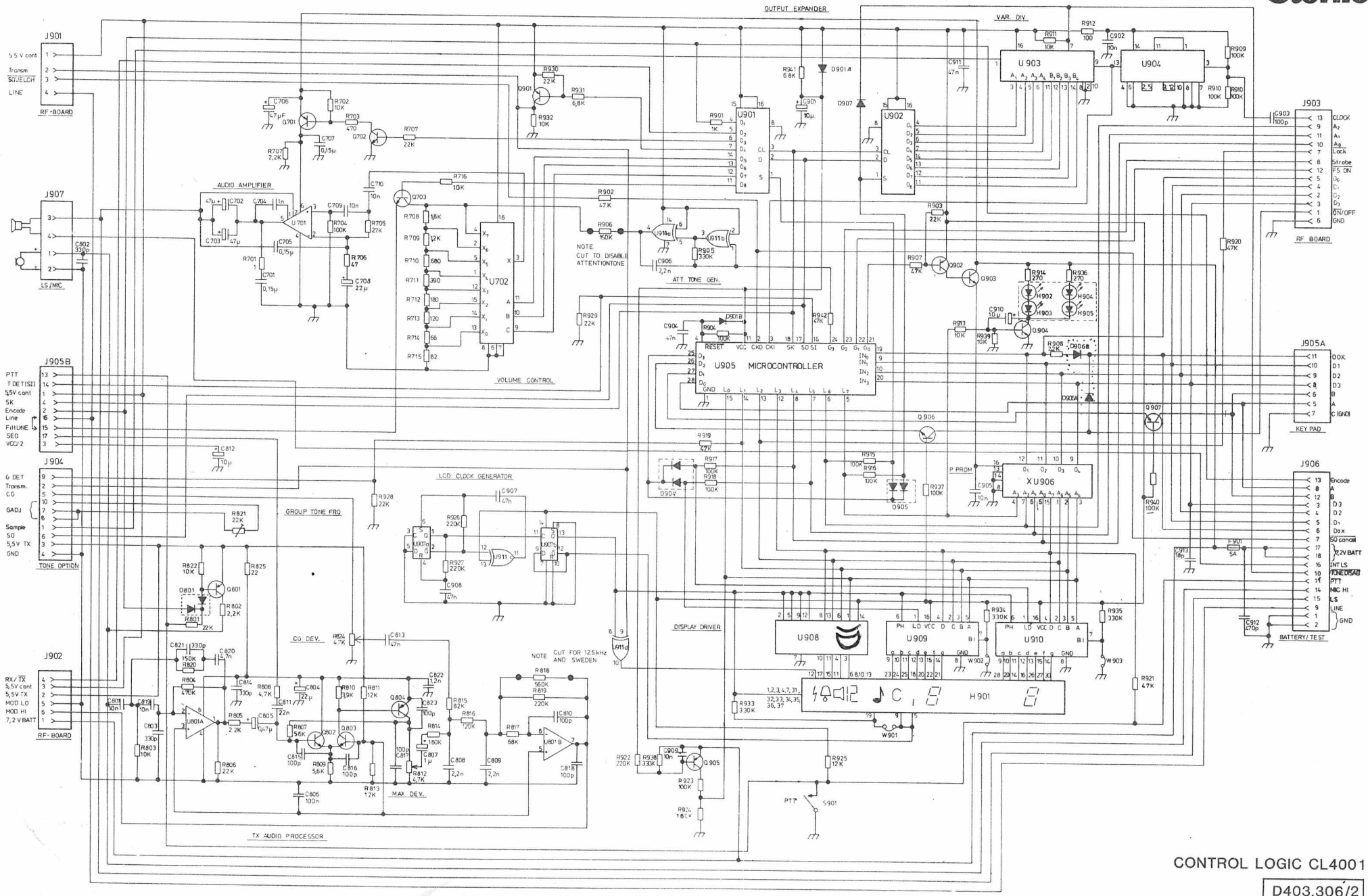

CONTROL LOGIC CL4001

D403.306/2

Storno

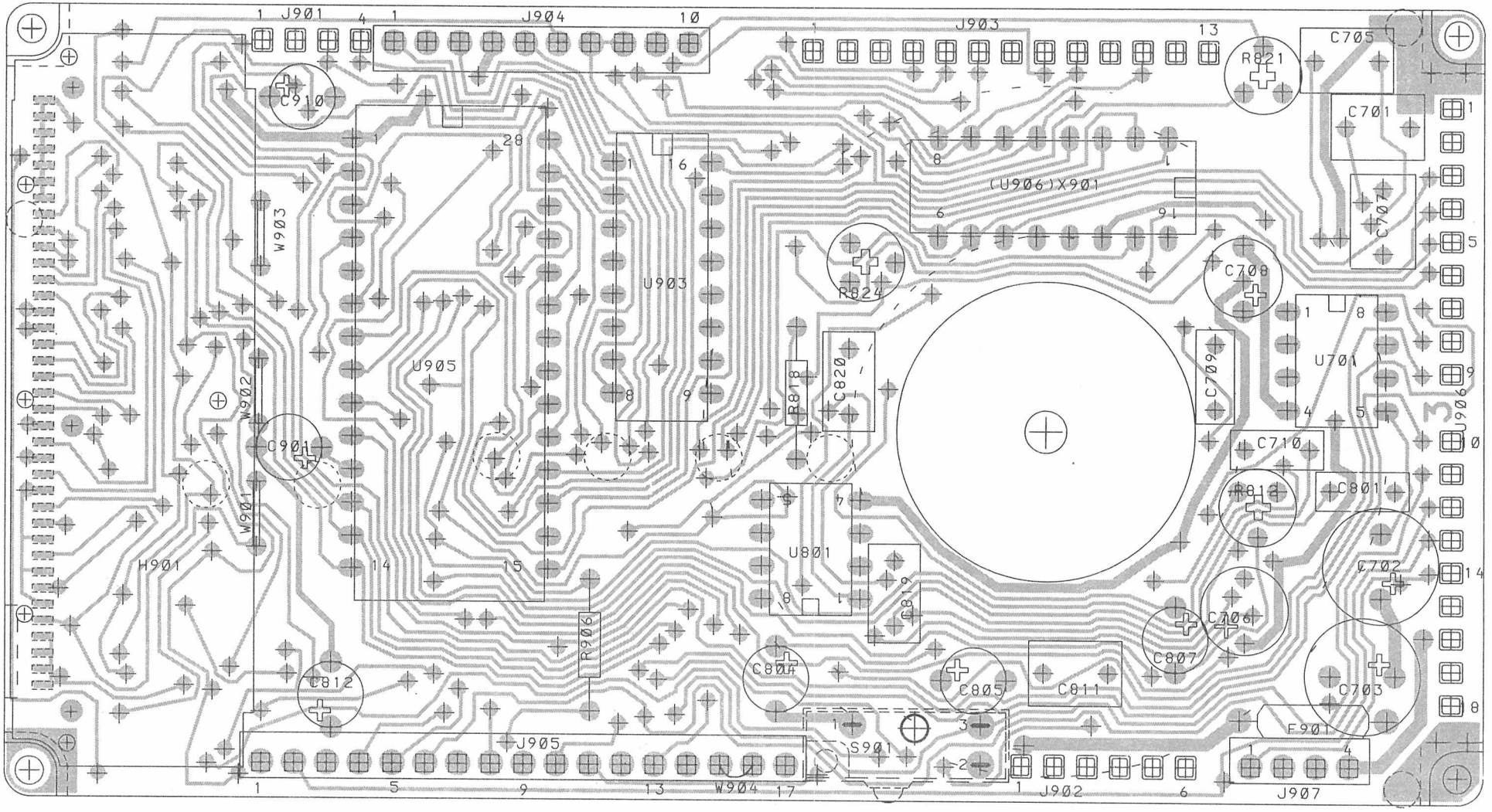

CONTROL LOGIC CL 4001

COMPONENT LAY-OUT

COMPONENT SIDE

CODE NO. M905465G1

D403.311/2

Storno

Storno

CONTROL LOGIC CL4001

D403.306/3

Storno

Storno

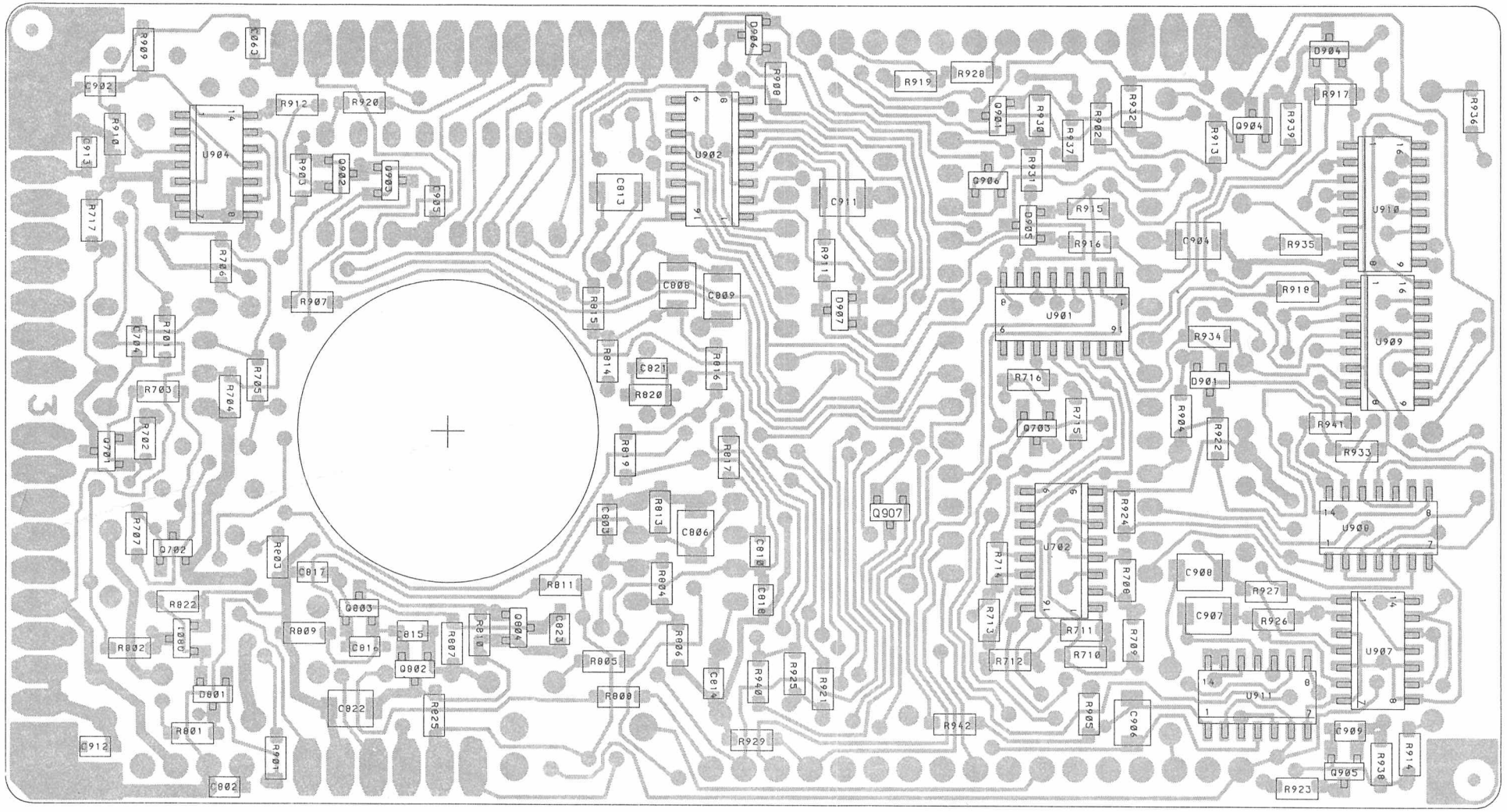

CONTROL LOGIC CL 4001
COMPONENT LAYOUT
CHIP SIDE

CODE NO. M905465G1

D403.312/2

Storno

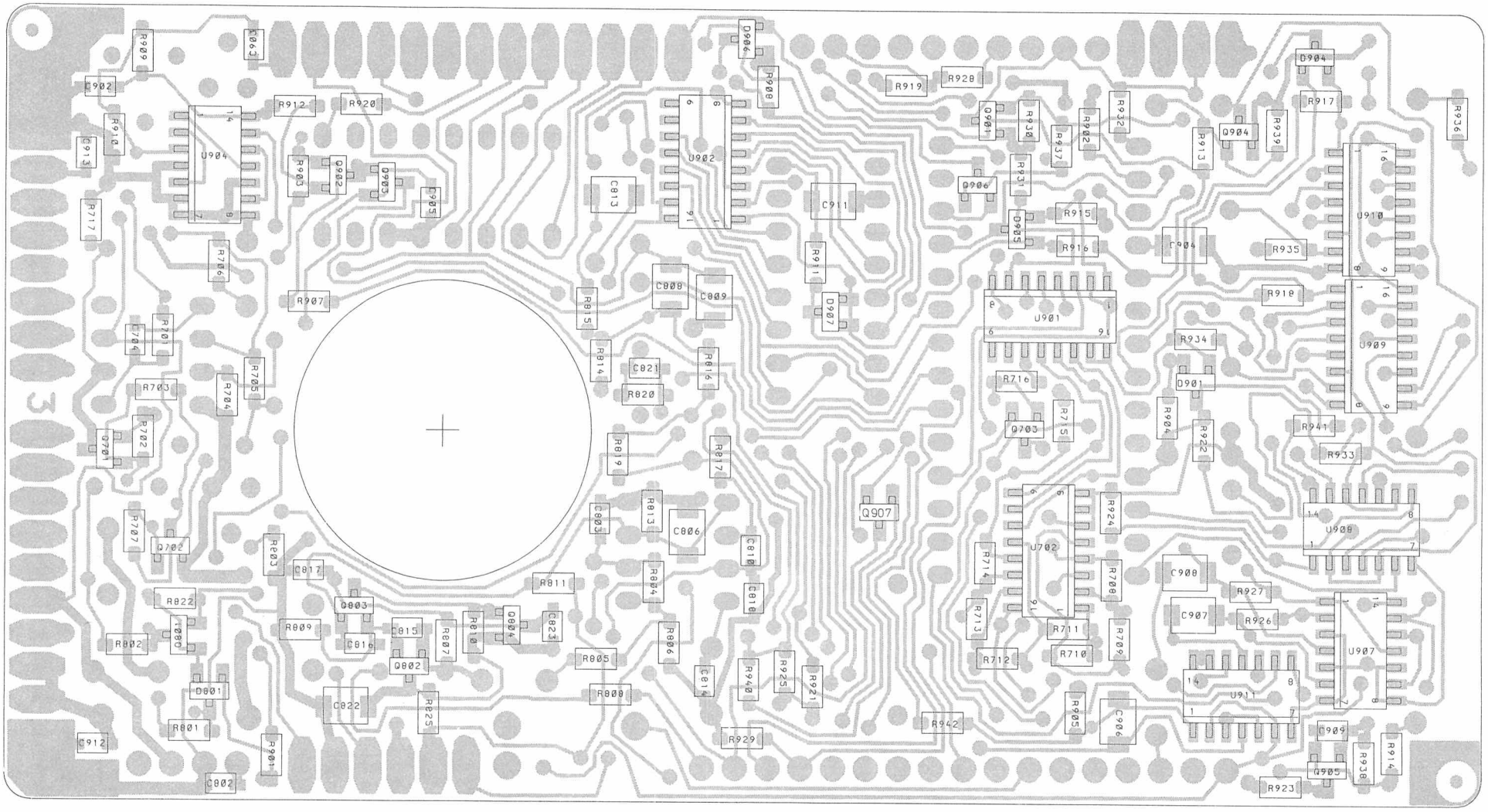

R943 AND R944 HAVE BEEN ADDED ON CHIP SIDE (SEE D403. 761)

CONTROL LOGIC CL 4001
COMPONENT LAYOUT
CHIP SIDE

CODE NO. M905465G1

Storno

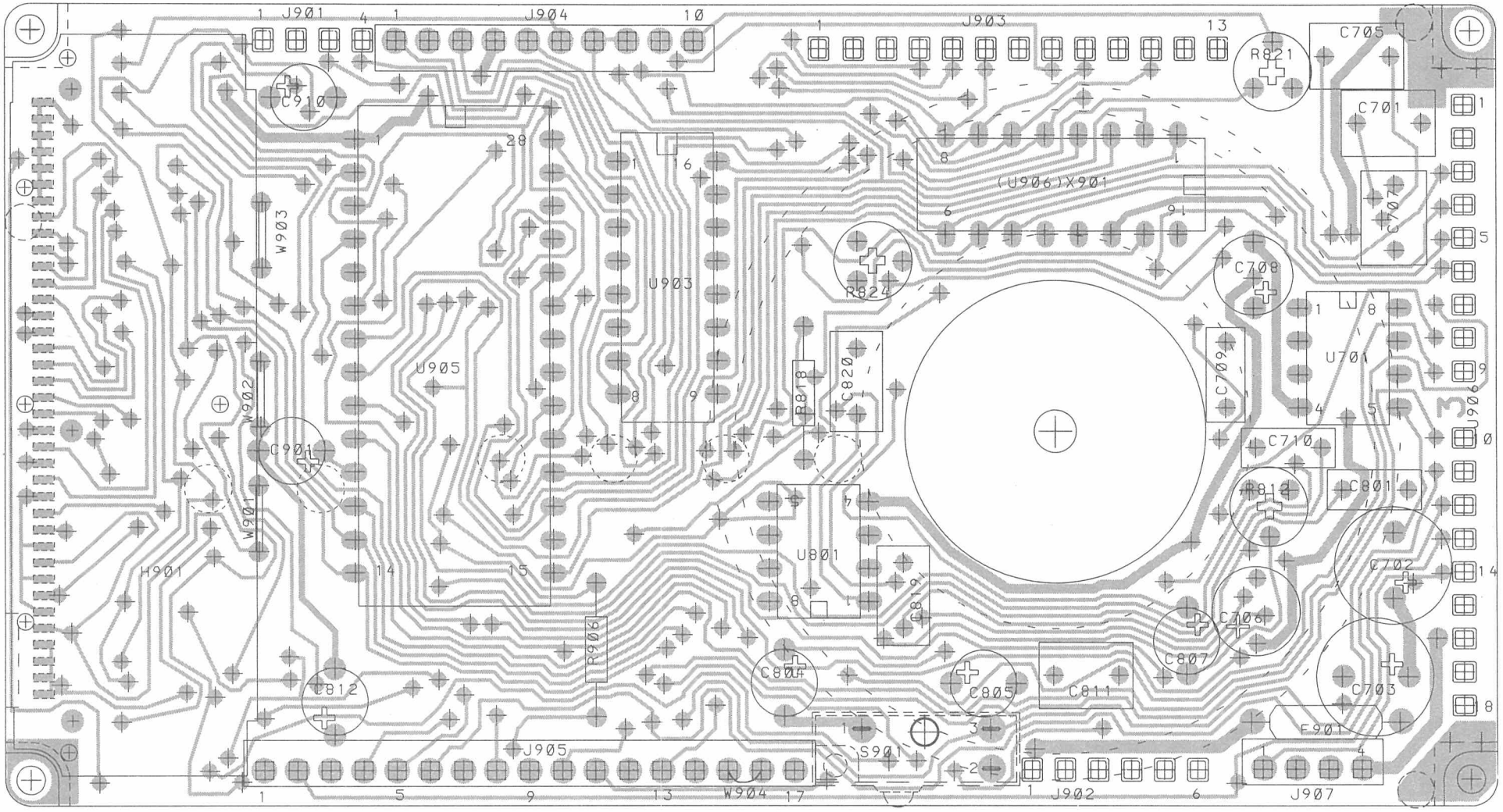

Q909 HAS BEEN ADDED ON COMPONENT SIDE (SEE D403. 760)

CONTROL LOGIC CL 4001

COMPONENT LAY-OUT

COMPONENT SIDE

CODE NO. M905465G1

D403. 311/3

Storno

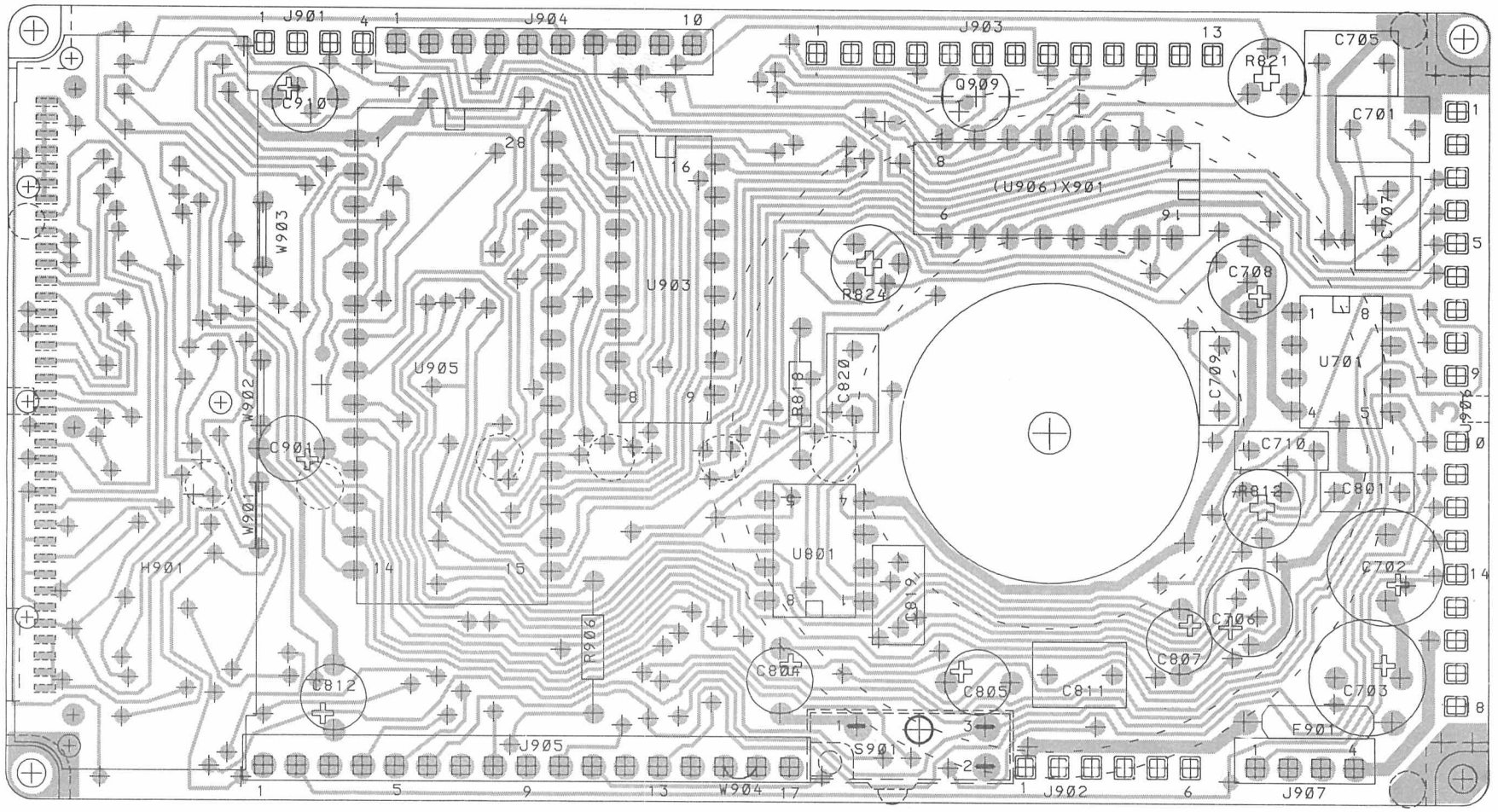

FOR 2M AND 4M VERSIONS: CODE NO. M905465G1

FOR UHF VERSIONS: CODE NO. M905465G2

CONTROL LOGIC CL4001
COMPONENT LAYOUT

D403.760

Storno

Storno

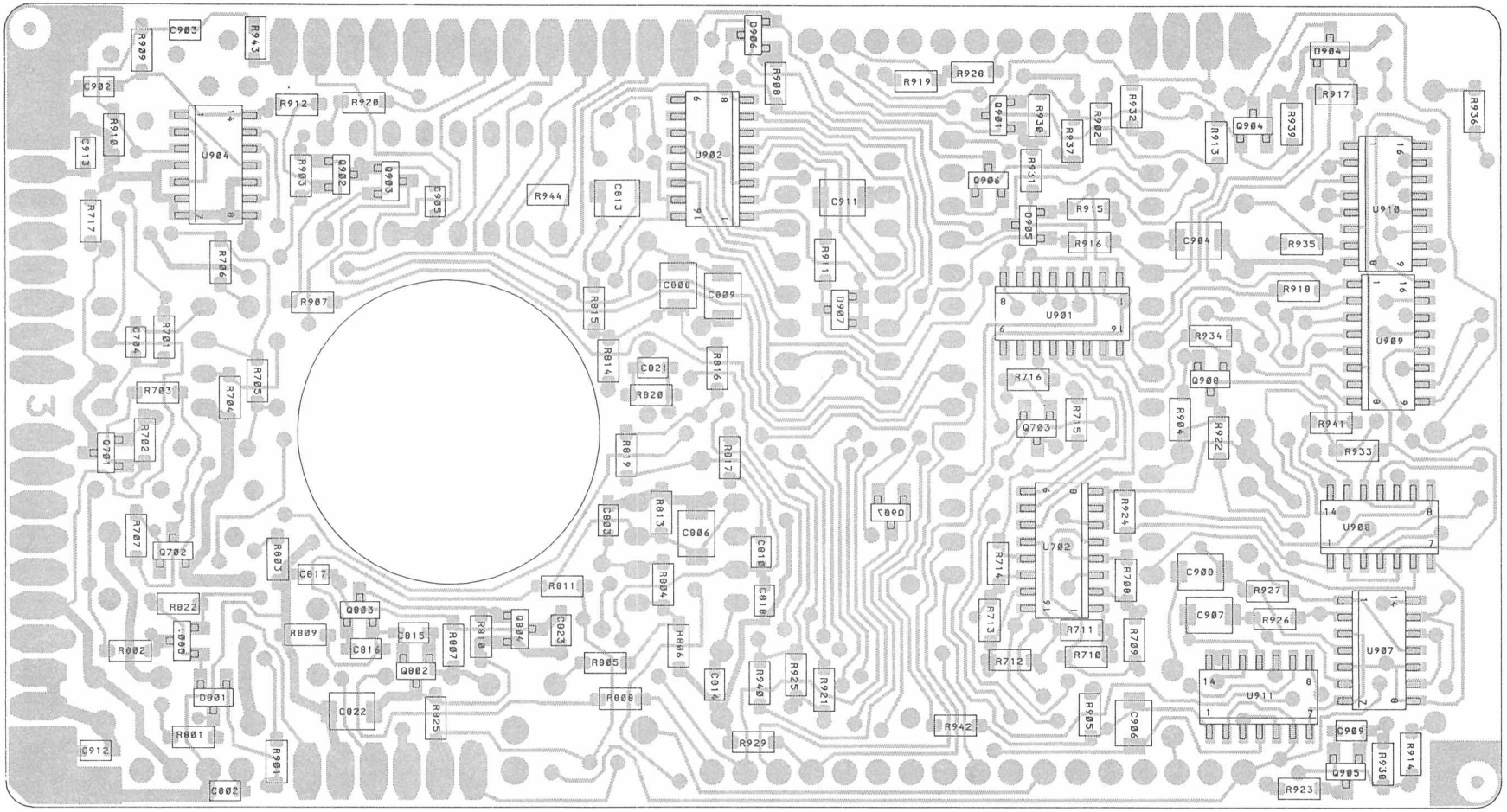

CONTROL LOGIC CL4001

COMPONENT LAYOUT

CHIP SIDE

D403. 761

Storno

Storno

J901
5,5 V cont. 1
Transm. 2
SQUELCH 3
LINE 4
RF-BOARD

J907
LS/MIC

J905B
PTT 13
T DET(SI) 14
5,5V cont. 1
SK 4
Encode 2
Line 16
FiltLINE 15
SEQ 17
VCC/2 3

J904
G DET 9
Transm. 2
CG 5
GADJ 10, 7, 8
Sample 1
SO 6
5,5V TX 3
GND 4
TONE OPTION

J902
RX/TX 4
5,5V cont 3
5,5V TX 2
MOD LO 5
MOD HI 6
7,2 V BATT 1
RF-BOARD

AUDIO AMPLIFIER
U701
VOLUME CONTROL
U702
GROUP TONE FRQ
LCD CLOCK GENERATOR
U907a, U907b, U911c
CG DEV.
MAX. DEV.
TX AUDIO PROCESSOR
NOTE: CUT FOR 12,5 kHz AND SWEDEN.
U911a, U911b
ATT. TONE GEN.
NOTE: CUT TO DISABLE ATTENTIONTONE
U911d

OUTPUT EXPANDER
U901
U902
VAR. DIV.
U903
U904
DISPLAY DRIVER
U908
U909
U910
H901
W902
W903
W901

U905 MICROCONTROLLER COP 324
SEE NOTE 1
RESET VCC CKO CKI SK SO SI G3 G2 G1 G0
GND L0 L1 L2 L3 L4 L5 L6 L7
IN0 IN1 IN2 IN3

P PROM
XU906

Q901 Q902 Q903 Q904 Q905 Q906 Q907 Q908 Q909
Q701 Q702 Q703 Q801 Q802 Q803 Q804
D801 D904 D905 D906A D906B D907
H902 H903 H904 H905

J903
CLOCK 13
A2 9
A1 11
A0 10
Lock 7
Strobe 8
FS ON 12
D0 5
D1 4
D2 2
D3 3
ON/OFF 1
GND 6
RF BOARD

J905A
DOX. 11
D1 10
D2 9
D3 8
B 6
A 5
C (GND) 7
KEY PAD

J906
Encode 13
A 8
B 12
D3 3
D2 4
D1 5
Dox 6
50 cancel 7
7,2V BATT 17, 18
INT LS 16
TONE DISAB 10
PTT 11
MIC HI 14
LS 15
LINE 9
GND 1, 2
BATTERY/TEST

S901 PTT

NOTE 1
ON G2 THE MICROCONTROLLER IS MOUNTED ON THICK FILM SUBSTRATE

REVISION LETTER F

CONTROL LOGIC CL4001

D403.759

ITEM NUMBER	DESCRIPTION
K805331G1	CONTROL LOGIC CL4001 , COMPLETE
M905465G1	SUB ASM - CL4001 CPNT BD

P A R T S L I S T :

CIRCUIT POSITION	COMPONENT ITEM NUMBER	COMPONENT DESCRIPTION	QUANTITY
		DISPLAY AND DISPLAY MECHANICS :	
S901	J707133P3	SWITCH	1
H901	J707230P1	DISPLAY, LCD	1
0005	K805332G1	ASM LIGHTENING DISPLAY	1
H902 - H905	J706022P1	DIODE LED, HP 5082-4190	4
	J707469P1	LEAD FRAME	1
	L855333P1	PLATE, ACRYLIC	1
0006	J707458P1	CONTACT STRAND SILC RUBB	1
0003	L855331P1	HOUSING FOR DISPLAY	1
0004	L855332P1	COVER FOR DISPLAY	1
		COMPONENT BOARD CL4001 :	
X901	J706356P4	SOC 16PIN	1
J901-903,J906	J706434P2	CONN BUTTOM ENTRY	41
U904	J707242P1	INT CKT 4013/SO14	1
U907	J707242P2	INT CKT 4013/SO14	1
U901, U902	J707243P1	INT CKT 4094/SO16	2
U909, U910	J707264P1	INT CKT 4543/SO16	2
U903	J707322P1	INT CKT 14569	1
C807	J707353P4	CAP ELEC 1.0 UF 50V	1
C812, C901	J707353P7	CAP ELEC 10 UF 16V	2
C910	J707353P7	CAP ELEC 10 UF 16V	1
C706	J707353P9	CAP ELEC 47 UF 16V	1
R912	J707385P101	RES MFILM 100 OHM 0,125W	1
R901, R931	J707385P102	RES MFILM 1K OHM 0,125W	2
R702, R716	J707385P103	RES MFILM 10K OHM 0,125W	2
R803, R822	J707385P103	RES MFILM 10K OHM 0,125W	2
R911, R913	J707385P103	RES MFILM 10K OHM 0,125W	2
R932, R939	J707385P103	RES MFILM 10K OHM 0,125W	2
R704, R904	J707385P104	RES MFILM 100K OHM 0,125W	2
R909, R910	J707385P104	RES MFILM 100K OHM 0,125W	2
R915, R916	J707385P104	RES MFILM 100K OHM 0,125W	2
R917, R918	J707385P104	RES MFILM 100K OHM 0,125W	2
R923, R937	J707385P104	RES MFILM 100K OHM 0,125W	2
R713	J707385P121	RES MFILM 120 OHM 0,125W	1
R709	J707385P122	RES MFILM 1,2K OHM 0,125W	1
R811, R813	J707385P123	RES MFILM 12K OHM 0,125W	2
R923	J707385P123	RES MFILM 12K OHM 0,125W	1
R816	J707385P124	RES MFILM 120K OHM 0,125W	1
R820	J707385P154	RES MFILM 150K OHM 0,125W	1
R712	J707385P181	RES MFILM 180 OHM 0,125W	1
R708	J707385P182	RES MFILM 1,8K OHM 0,125W	1
R814, R924	J707385P184	RES MFILM 180K OHM 0,125W	2
R825	J707385P220	RES MFILM 22 OHM 0,125W	1
R717, R802	J707385P222	RES MFILM 2,2K OHM 0,125W	2
R805, R908	J707385P222	RES MFILM 2,2K OHM 0,125W	2
R707, R801	J707385P223	RES MFILM 22K OHM 0,125W	2
R806, R903	J707385P223	RES MFILM 22K OHM 0,125W	2
R928, R929	J707385P223	RES MFILM 22K OHM 0,125W	2
R930	J707385P223	RES MFILM 22K OHM 0,125W	1
R819, R922	J707385P224	RES MFILM 220K OHM 0,125W	2

CIRCUIT POSITION	COMPONENT ITEM NUMBER	COMPONENT DESCRIPTION	QUANTITY
R926, R927	J707385P224	RES MFILM 220K OHM 0,125W	2
R914, R936	J707385P271	RES MFILM 270 OHM 0,125W	2
R705	J707385P273	RES MFILM 27K OHM 0,125W	1
R905, R933	J707385P334	RES MFILM 330K OHM 0,125W	2
R934, R935	J707385P334	RES MFILM 330K OHM 0,125W	2
R938	J707385P334	RES MFILM 330K OHM 0,125W	1
R711	J707385P391	RES MFILM 390 OHM 0,125W	1
R810	J707385P392	RES MFILM 3,9K OHM 0,125W	1
R706	J707385P470	RES MFILM 47 OHM 0,125W	1
R703	J707385P471	RES MFILM 470 OHM 0,125W	1
R808	J707385P472	RES MFILM 4,7K OHM 0,125W	1
R902, R907	J707385P473	RES MFILM 47K OHM 0,125W	2
R919, R920	J707385P473	RES MFILM 47K OHM 0,125W	2
R921	J707385P473	RES MFILM 47K OHM 0,125W	1
R804	J707385P474	RES MFILM 470K OHM 0,125W	1
R809	J707385P562	RES MFILM 5,6K OHM 0,125W	1
R807	J707385P563	RES MFILM 56K OHM 0,125W	1
R714	J707385P680	RES MFILM 68 OHM 0,125W	1
R710	J707385P681	RES MFILM 680 OHM 0,125W	1
R817	J707385P683	RES MFILM 68K OHM 0,125W	1
R715	J707385P820	RES MFILM 82 OHM 0,125W	1
R815	J707385P823	RES MFILM 82K OHM 0,125W	1
R701	J707385P910	RES MFILM 91 OHM 0,125W	1
Q702, Q703	J707386P1	TSTR BCW 32	2
Q802, Q803	J707386P1	TSTR BCW 32	2
Q904, Q906	J707386P1	TSTR BCW 32	2
Q907	J707386P1	TSTR BCW 32	1
Q801, Q804	J707387P1	TSTR BCW 30	2
Q902, Q905	J707387P1	TSTR BCW 30	2
D801, D901	J707390P1	DIO SI BAV 70	2
D904, D905	J707390P1	DIO SI BAV 70	2
D906, D907	J707390P1	DIO SI BAV 70	2
C801	J707412P1	CAP POL 4,7NF 63V	1
C701, C705	J707412P10	CAP POL 0,15 UF 63V	2
C707,	J707412P10	CAP POL 0,15 UF 63V	1
C811	J707412P11	CAP POL 0,22 UF	1
C709, C710	J707412P3	CAP POL 10NF 63V	2
	J707412P5	CAP POL 0,022 UF 63V	1
Q903	J707429P1	TSTR BCX 20	1
Q701	J707432P1	TSTR BCX18	2
U702	J707434P1	INT CKT 4051/SO16	1
C913	J707436P25	CAP CER 18PF 50V	1
C810, C815	J707436P61	CAP CER 100PF 50V	2
C816, C817	J707436P61	CAP CER 100PF 50V	2
C819, C903	J707436P61	CAP CER 100PF 50V	2
C803	J707436P73	CAP CER 330PF 50V	1
C814	J707436P73	CAP CER 330PF 50V	1
C808, C809	J707436P93	CAP CER 2,2NF 50V	2
C906	J707436P93	CAP CER 2,2NF 50V	1
C902, C905	J707438P14	CAP CER 10NF 50V	2
C909	J707438P14	CAP CER 10NF 50V	1
C806, C813	J707438P22	CAP CER 47NF 50V	2
C904, C907	J707438P22	CAP CER 47NF 50V	2
C908	J707438P22	CAP CER 47NF 50V	1
C911	J707438P22	CAP CER 47NF 50V	1

CIRCUIT POSITION	COMPONENT ITEM NUMBER	COMPONENT DESCRIPTION	QUANTITY
C912	J707438P3	CAP CER 470NF 50V	1
C704	J707438P5	CAP CER 1NF 50V	1
J907	J707442P1	CONN 4-POS FEMALE	1
J904	J707442P2	CONN 10-POS FEMALE	1
J905	J707442P3	CONN 17-POS FEMALE	1
C702, C703	J707444P17	CAP TA 47 UF 10V	2
C805	J707444P3	CAP TA 0,47 UF 35V	1
C708, C804	J707444P8	CAP TA 22 UF 16V	2
U801	J707450P1	INT CKT LM358	1
U701	J707451P1	INT CKT TBA 820M	1
U908,U911	J707464P1	INT CKT 4070/SO14	2
F901	J707468P11	FUSE 5A	1
R906	J707476P51	RES DEPOS 150K OHM	1
R818	J707476P58	RES DEPOS 560K OHM 0,1W	1
R821	J707478P12	RES VAR 22K OHM 0,05W	1
R812,R824	J707478P8	RES VAR 4,7K OHM 0,05W	2
U905	J708019P2	INT CKT COP324C, U-PG CTL	1

ITEM NUMBER	DESCRIPTION
K805331G1	CONTROL LOGIC CL4001 , COMPLETE
M905465G1	SUB ASM - CL4001 CPNT BD

P A R T S L I S T :

CIRCUIT POSITION	COMPONENT ITEM NUMBER	COMPONENT DESCRIPTION	QUANTITY TOTAL
		DISPLAY AND DISPLAY MECHANICS :	
H901	J707230P1	DISPLAY, LCD	1
H902	J706022P1	DIODE LED, HP 5082-4190	1
H903	J706022P1	DIODE LED, HP 5082-4190	1
H904	J706022P1	DIODE LED, HP 5082-4190	1
H905	J706022P1	DIODE LED, HP 5082-4190	1
0003	L855331P1	HOUSING FOR DISPLAY	1
0004	L855332P1	COVER FOR DISPLAY	1
0005	K805332G1	ASM LIGHTENING DISPLAY	1
0006	J707458P1	CONTACT STRAND SILC RUBB	1
	J707469P1	LEAD FRAME	1
	L855333P1	PLATE, ACRYLIC	1
		COMPONENT BOARD CL4001 :	
C701	J707412P10	CAP POL 0,15 UF 63V	1
C702	J707444P17	CAP TA 47 UF 10V	1
C703	J707444P17	CAP TA 47 UF 10V	1
C704	J707438P5	CAP CER 1NF 50V	1
C705	J707412P10	CAP POL 0,15 UF 63V	1
C706	J707353P9	CAP ELEC 47 UF 16V	1
C707	J707412P10	CAP POL 0,15 UF 63V	1
C708	J707444P8	CAP TA 22 UF 16V	1
C709	J707412P3	CAP POL 10 NF 63V	1
C710	J707412P3	CAP POL 10 NF 63V	1
C801	J707412P3	CAP POL 10 NF 63V	1
C802	J707436P73	CAP CER 330PF 50V	1
C803	J707436P73	CAP CER 330PF 50V	1
C804	J707444P8	CAP TA 22 UF 16V	1
C805	J707444P3	CAP TA 0,47 UF 35V	1
C806	J707438P26	CAP CER 100 NF 50V	1
C807	J707353P4	CAP ELEC 1.0 UF 50V	1
C808	J707436P93	CAP CER 2,2NF 50V	1
C809	J707436P93	CAP CER 2,2NF 50V	1
C810	J707436P61	CAP CER 100PF 50V	1
C811	J707412P5	CAP POL 22 NF 63V	1
C812	J707353P7	CAP ELEC 10 UF 16V	1
C813	J707438P22	CAP CER 47NF 50V	1
C814	J707436P73	CAP CER 330PF 50V	1
C815	J707436P61	CAP CER 100PF 50V	1
C816	J707436P61	CAP CER 100PF 50V	1
C817	J707436P61	CAP CER 100PF 50V	1
C818	J707436P61	CAP CER 100PF 50V	1
C819	J707412P3	CAP POL 10 NF 63V	1
C820	J707412P1	CAP POL 4,7NF 63V	1

	CIRCUIT POSITION	COMPONENT ITEM NUMBER	COMPONENT DESCRIPTION	QUANTITY TOTAL
	C821	J707436P73	CAP CER 330PF 50V	1
	C823	J707436P61	CAP CER 100PF 50V	1
	C901	J707353P7	CAP ELEC 10 UF 16V	1
	C902	J707438P14	CAP CER 10NF 50V	1
	C903	J707436P61	CAP CER 100PF 50V	1
*	C904	J707438P22	CAP CER 47NF 50V	1
	C905	J707438P14	CAP CER 10NF 50V	1
	C906	J707436P93	CAP CER 2,2NF 50V	1
	C907	J707438P22	CAP CER 47NF 50V	1
	C908	J707438P22	CAP CER 47NF 50V	1
	C909	J707438P14	CAP CER 10NF 50V	1
	C910	J707353P7	CAP ELEC 10 UF 16V	1
	C911	J707438P22	CAP CER 47NF 50V	1
	C912	J707438P3	CAP CER 470NF 50V	1
	C913	J707436P25	CAP CER 18PF 50V	1
	D801	J707390P1	DIO SI SIG BAV 74	1
	D901	J707390P1	DIO SI SIG BAV 74	1
	D904	J707390P1	DIO SI SIG BAV 74	1
	D905	J707390P1	DIO SI SIG BAV 74	1
	D906	J707390P1	DIO SI SIG BAV 74	1
	D907	J707390P1	DIO SI SIG BAV 74	1
	F901	J707468P11	FUSE 5A	1
	J901	J706434P2	CONN BUTTOM ENTRY	4
	J902	J706434P2	CONN BUTTOM ENTRY	6
	J903	J706434P2	CONN BUTTOM ENTRY	13
	J904	J707442P2	CONN 10-POS FEMALE	1
	J905	J707442P3	CONN 17-POS FEMALE	1
	J906	J706434P2	CONN BUTTOM ENTRY	18
	J907	J707442P1	CONN 4-POS FEMALE	1
	Q701	J707432P1	TSTR PNP SI BCX 18	1
	Q702	J707386P1	TSTR NPN SI BCW 32	1
	Q703	J707386P1	TSTR NPN SI BCW 32	1
	Q801	J707387P1	TSTR PNP SI BCW 30	1
	Q802	J707386P1	TSTR NPN SI BCW 32	1
	Q803	J707386P1	TSTR NPN SI BCW 32	1
	Q804	J707387P1	TSTR PNP SI BCW 30	1
	Q901	J707387P1	TSTR PNP SI BCW 30	1
	Q902	J707387P1	TSTR PNP SI BCW 30	1
	Q903	J707429P1	TSTR BCX 20	1
	Q904	J707386P1	TSTR NPN SI BCW 32	1
	Q905	J707387P1	TSTR PNP SI BCW 30	1
	Q906	J707386P1	TSTR NPN SI BCW 32	1
	Q907	J707386P1	TSTR NPN SI BCW 32	1
	R701	J707385P910	RES MFILM 91 OHM 0,125W	1
	R702	J707385P103	RES MFILM 10K OHM 0,125W	1
	R703	J707385P471	RES MFILM 470 OHM 0,125W	1
	R704	J707385P104	RES MFILM 100K OHM 0,125W	1
	R705	J707385P273	RES MFILM 27K OHM 0,125W	1
	R706	J707385P470	RES MFILM 47 OHM 0,125W	1
	R707	J707385P223	RES MFILM 22K OHM 0,125W	1
	R708	J707385P182	RES MFILM 1,8K OHM 0,125W	1
	R709	J707385P122	RES MFILM 1,2K OHM 0,125W	1

	CIRCUIT POSITION	COMPONENT ITEM NUMBER	COMPONENT DESCRIPTION	QUANTITY TOTAL
	R710	J707385P681	RES MFILM 680 OHM 0,125W	1
	R711	J707385P391	RES MFILM 390 OHM 0,125W	1
	R712	J707385P181	RES MFILM 180 OHM 0,125W	1
	R713	J707385P121	RES MFILM 120 OHM 0,125W	1
	R714	J707385P680	RES MFILM 68 OHM 0,125W	1
	R715	J707385P820	RES MFILM 82 OHM 0,125W	1
	R716	J707385P103	RES MFILM 10K OHM 0,125W	1
*	R717	J707385P222	RES MFILM 2,2K OHM 0,125W	1
*	R801	J707385P223	RES MFILM 22K OHM 0,125W	1
	R802	J707385P222	RES MFILM 2,2K OHM 0,125W	1
*	R803	J707385P103	RES MFILM 10K OHM 0,125W	1
*	R804	J707385P474	RES MFILM 470K OHM 0,125W	1
	R805	J707385P222	RES MFILM 2,2K OHM 0,125W	1
	R806	J707385P223	RES MFILM 22K OHM 0,125W	1
*	R807	J707385P563	RES MFILM 56K OHM 0,125W	1
*	R808	J707385P472	RES MFILM 4,7K OHM 0,125W	1
	R809	J707385P562	RES MFILM 5,6K OHM 0,125W	1
	R810	J707385P392	RES MFILM 3,9K OHM 0,125W	1
	R811	J707385P123	RES MFILM 12K OHM 0,125W	1
	R812	J707478P8	RES VAR 4,7K OHM 0,05W	1
	R813	J707385P123	RES MFILM 12K OHM 0,125W	1
	R814	J707385P184	RES MFILM 180K OHM 0,125W	1
	R815	J707385P823	RES MFILM 82K OHM 0,125W	1
	R816	J707385P124	RES MFILM 120K OHM 0,125W	1
	R817	J707385P683	RES MFILM 68K OHM 0,125W	1
	R818	J707476P58	RES DEPOS 560K OHM 0,1W	1
	R819	J707385P224	RES MFILM 220K OHM 0,125W	1
*	R820	J707385P154	RES MFILM 150K OHM 0,125W	1
	R821	J707478P12	RES VAR 22K OHM 0,05W	1
*	R822	J707385P103	RES MFILM 10K OHM 0,125W	1
*	R824	J707478P6	RES VAR 2,2K OHM 0,05W	1
	R825	J707385P220	RES MFILM 22 OHM 0,125W	1
	R901	J707385P102	RES MFILM 1K OHM 0,125W	1
	R902	J707385P473	RES MFILM 47K OHM 0,125W	1
	R903	J707385P223	RES MFILM 22K OHM 0,125W	1
	R904	J707385P104	RES MFILM 100K OHM 0,125W	1
	R905	J707385P334	RES MFILM 330K OHM 0,125W	1
	R906	J707476P51	RES DEPOS 150K OHM	1
	R907	J707385P473	RES MFILM 47K OHM 0,125W	1
	R908	J707385P222	RES MFILM 2,2K OHM 0,125W	1
	R909	J707385P104	RES MFILM 100K OHM 0,125W	1
	R910	J707385P104	RES MFILM 100K OHM 0,125W	1
	R911	J707385P103	RES MFILM 10K OHM 0,125W	1
	R912	J707385P101	RES MFILM 100 OHM 0,125W	1
	R913	J707385P103	RES MFILM 10K OHM 0,125W	1
	R914	J707385P271	RES MFILM 270 OHM 0,125W	1
	R915	J707385P104	RES MFILM 100K OHM 0,125W	1
	R916	J707385P104	RES MFILM 100K OHM 0,125W	1
	R917	J707385P104	RES MFILM 100K OHM 0,125W	1
	R918	J707385P104	RES MFILM 100K OHM 0,125W	1
	R919	J707385P473	RES MFILM 47K OHM 0,125W	1
	R920	J707385P473	RES MFILM 47K OHM 0,125W	1
	R921	J707385P473	RES MFILM 47K OHM 0,125W	1
	R922	J707385P224	RES MFILM 220K OHM 0,125W	1
	R923	J707385P104	RES MFILM 100K OHM 0,125W	1
	R924	J707385P184	RES MFILM 180K OHM 0,125W	1
*	R925	J707385P123	RES MFILM 12K OHM 0,125W	1

	CIRCUIT POSITION	COMPONENT ITEM NUMBER	COMPONENT DESCRIPTION	QUANTITY TOTAL
	R926	J707385P224	RES MFILM 220K OHM 0,125W	1
	R927	J707385P224	RES MFILM 220K OHM 0,125W	1
	R928	J707385P223	RES MFILM 22K OHM 0,125W	1
	R929	J707385P223	RES MFILM 22K OHM 0,125W	1
	R930	J707385P223	RES MFILM 22K OHM 0,125W	1
*	R931	J707385P102	RES MFILM 1K OHM 0,125W	1
	R932	J707385P103	RES MFILM 10K OHM 0,125W	1
	R933	J707385P334	RES MFILM 330K OHM 0,125W	1
	R934	J707385P334	RES MFILM 330K OHM 0,125W	1
	R935	J707385P334	RES MFILM 330K OHM 0,125W	1
	R936	J707385P271	RES MFILM 270 OHM 0,125W	1
	R937	J707385P104	RES MFILM 100K OHM 0,125W	1
	R938	J707385P334	RES MFILM 330K OHM 0,125W	1
	R939	J707385P103	RES MFILM 10K OHM 0,125W	1
	S901	J707133P3	SWITCH	1
	U701	J707451P1	INT CKT TBA 820M	1
	U702	J707434P1	INT CKT CMOS 4051/SO16	1
	U801	J707450P1	INT CKT LM358	1
	U901	J707243P1	INT CKT CMOS 4094/SO16	1
	U902	J707243P1	INT CKT CMOS 4094/SO16	1
	U903	J707322P1	INT CKT 14569	1
	U904	J707242P1	INT CKT CMOS 4013/SO14	1
	U905	J708019P2	INT CKT, U-CTL. COP324C, PRGMD	1
	U907	J707242P2	INT CKT CMOS 4013/SO14	1
	U908	J707464P1	INT CKT CMOS 4070/SO14	1
	U909	J707264P1	INT CKT CMOS 4543/SO16	1
	U910	J707264P1	INT CKT CMOS 4543/SO16	1
	U911	J707464P1	INT CKT CMOS 4070/SO14	1
	W901	A700134P9	WIRE JUMPER	1
	W902	A700134P9	WIRE JUMPER	1
	W903	A700134P9	WIRE JUMPER	1
	W904	A700134P9	WIRE JUMPER	1
	X901	J706356P4	SOC 16PIN	1

ITEM NUMBER	DESCRIPTION
K805331G1	CONTROL LOGIC CL4001, 1.ST VERSION REV.
M905465G1	ASM - CL4001 CPNT BD. 1.ST VERSION REV.

P A R T S L I S T :

CIRCUIT POSITION	COMPONENT ITEM NUMBER	COMPONENT DESCRIPTION	QUANTITY TOTAL
		DISPLAY AND DISPLAY MECHANICS :	
H901	J707230P1	DISPLAY, LCD	1
H902	J706022P1	DIODE LED, HP 5082-4190	1
H903	J706022P1	DIODE LED, HP 5082-4190	1
H904	J706022P1	DIODE LED, HP 5082-4190	1
H905	J706022P1	DIODE LED, HP 5082-4190	1
0003	L855331P1	HOUSING FOR DISPLAY	1
0004	L855332P1	COVER FOR DISPLAY	1
0005	K805332G1	ASM LIGHTENING DISPLAY	1
0006	J707458P1	CONTACT STRAND SILC RUBB	1
	J707469P1	LEAD FRAME	1
	L855333P1	PLATE, ACRYLIC	1
		COMPONENT BOARD CL4001 :	
C701	J707412P10	CAP POL 0,15 UF 63V	1
C702	J707444P17	CAP TA 47 UF 10V	1
C703	J707444P17	CAP TA 47 UF 10V	1
C704	J707438P5	CAP CER 1NF 50V	1
C705	J707412P10	CAP POL 0,15 UF 63V	1
C706	J707353P9	CAP ELEC 47 UF 16V	1
C707	J707412P10	CAP POL 0,15 UF 63V	1
C708	J707444P8	CAP TA 22 UF 16V	1
C709	J707412P3	CAP POL 10 NF 63V	1
C710	J707412P3	CAP POL 10 NF 63V	1
C801	J707412P3	CAP POL 10 NF 63V	1
C802	J707436P73	CAP CER 330PF 50V	1
C803	J707436P73	CAP CER 330PF 50V	1
C804	J707444P8	CAP TA 22 UF 16V	1
C805	J707444P3	CAP TA 0,47 UF 35V	1
C806	J707438P26	CAP CER 100 NF 50V	1
C807	J707353P4	CAP ELEC 1.0 UF 50V	1
C808	J707436P93	CAP CER 2,2NF 50V	1
C809	J707436P93	CAP CER 2,2NF 50V	1
C810	J707436P61	CAP CER 100PF 50V	1
C811	J707412P5	CAP POL 22 NF 63V	1
C812	J707353P7	CAP ELEC 10 UF 16V	1
C813	J707438P22	CAP CER 47NF 50V	1
C814	J707436P73	CAP CER 330PF 50V	1
C815	J707436P61	CAP CER 100PF 50V	1
C816	J707436P61	CAP CER 100PF 50V	1
C817	J707436P61	CAP CER 100PF 50V	1
C818	J707436P61	CAP CER 100PF 50V	1
C819	J707412P3	CAP POL 10 NF 63V	1

	CIRCUIT POSITION		COMPONENT ITEM NUMBER		COMPONENT DESCRIPTION	QUANTITY TOTAL
	C820		J707412P1		CAP POL 4,7NF 63V	1
	C821		J707436P73		CAP CER 330PF 50V	1
**	C822		J707436P87		CAP CER 1N2 5%, 50V	1
	C823		J707436P61		CAP CER 100PF 50V	1
	C901		J707353P7		CAP ELEC 10 UF 16V	1
	C902		J707438P14		CAP CER 10NF 50V	1
	C903		J707436P61		CAP CER 100PF 50V	1
*	C904		J707438P22		CAP CER 47NF 50V	1
	C905		J707438P14		CAP CER 10NF 50V	1
	C906		J707436P93		CAP CER 2,2NF 50V	1
	C907		J707438P22		CAP CER 47NF 50V	1
	C908		J707438P22		CAP CER 47NF 50V	1
	C909		J707438P14		CAP CER 10NF 50V	1
	C910		J707353P7		CAP ELEC 10 UF 16V	1
	C911		J707438P22		CAP CER 47NF 50V	1
	C912		J707438P3		CAP CER 470NF 50V	1
	C913		J707436P25		CAP CER 18PF 50V	1
	D801		J707390P1		DIO SI SIG BAV 74	1
	D901		J707390P1		DIO SI SIG BAV 74	1
	D904		J707390P1		DIO SI SIG BAV 74	1
	D905		J707390P1		DIO SI SIG BAV 74	1
	D906		J707390P1		DIO SI SIG BAV 74	1
	D907		J707390P1		DIO SI SIG BAV 74	1
	F901		J707468P11	**	FUSE 5.0A F	1
	J901		J706434P2		CONN BUTTOM ENTRY	4
	J902		J706434P2		CONN BUTTOM ENTRY	6
	J903		J706434P2		CONN BUTTOM ENTRY	13
	J904		J707442P2		CONN 10-POS FEMALE	1
	J905		J707442P3		CONN 17-POS FEMALE	1
	J906		J706434P2		CONN BUTTOM ENTRY	18
	J907		J707442P1		CONN 4-P0S FEMALE	1
	Q701		J707432P1		TSTR PNP SI BCX 18	1
	Q702		J707386P1		TSTR NPN SI BCW 32	1
	Q703		J707386P1		TSTR NPN SI BCW 32	1
	Q801		J707387P1		TSTR PNP SI BCW 30	1
	Q802		J707386P1		TSTR NPN SI BCW 32	1
	Q803		J707386P1		TSTR NPN SI BCW 32	1
	Q804		J707387P1		TSTR PNP SI BCW 30	1
	Q901	**	J707432P1	**	TSTR PNP SI BCX 18	1
	Q902		J707387P1		TSTR PNP SI BCW 30	1
	Q903		J707429P1		TSTR NPN SI BCX 20	1
	Q904		J707386P1		TSTR NPN SI BCW 32	1
	Q905		J707387P1		TSTR PNP SI BCW 30	1
	Q906		J707386P1		TSTR NPN SI BCW 32	1
	Q907		J707386P1		TSTR NPN SI BCW 32	1
	R701		J707385P910	**	RES MFILM 1R0 OHM 0,125W	1
	R702		J707385P103		RES MFILM 10K OHM 0,125W	1
	R703		J707385P471		RES MFILM 470 OHM 0,125W	1
	R704		J707385P104		RES MFILM 100K OHM 0,125W	1
	R705		J707385P273		RES MFILM 27K OHM 0,125W	1
	R706		J707385P470		RES MFILM 47 OHM 0,125W	1

	CIRCUIT POSITION	COMPONENT ITEM NUMBER	COMPONENT DESCRIPTION	QUANTITY TOTAL
	R707	J707385P223	RES MFILM 22K OHM 0,125W	1
	R708	J707385P182	RES MFILM 1,8K OHM 0,125W	1
	R709	J707385P122	RES MFILM 1,2K OHM 0,125W	1
	R710	J707385P681	RES MFILM 680 OHM 0,125W	1
	R711	J707385P391	RES MFILM 390 OHM 0,125W	1
	R712	J707385P181	RES MFILM 180 OHM 0,125W	1
	R713	J707385P121	RES MFILM 120 OHM 0,125W	1
	R714	J707385P680	RES MFILM 68 OHM 0,125W	1
	R715	J707385P820	RES MFILM 82 OHM 0,125W	1
	R716	J707385P103	RES MFILM 10K OHM 0,125W	1
*	R717	J707385P222	RES MFILM 2,2K OHM 0,125W	1
*	R801	J707385P223	RES MFILM 22K OHM 0,125W	1
	R802	J707385P222	RES MFILM 2,2K OHM 0,125W	1
*	R803	J707385P103	RES MFILM 10K OHM 0,125W	1
*	R804	J707385P474	RES MFILM 470K OHM 0,125W	1
	R805	J707385P222	RES MFILM 2,2K OHM 0,125W	1
	R806	J707385P223	RES MFILM 22K OHM 0,125W	1
*	R807	J707385P563	RES MFILM 56K OHM 0,125W	1
*	R808	J707385P472	RES MFILM 4,7K OHM 0,125W	1
	R809	J707385P562	RES MFILM 5,6K OHM 0,125W	1
	R810	J707385P392	RES MFILM 3,9K OHM 0,125W	1
	R811	J707385P123	RES MFILM 12K OHM 0,125W	1
	R812	J707478P8	RES VAR 4,7K OHM 0,05W	1
	R813	J707385P123	RES MFILM 12K OHM 0,125W	1
	R814	J707385P184	RES MFILM 180K OHM 0,125W	1
	R815	J707385P823	RES MFILM 82K OHM 0,125W	1
	R816	J707385P124	RES MFILM 120K OHM 0,125W	1
	R817	J707385P683	RES MFILM 68K OHM 0,125W	1
	R818	J707476P58	RES DEPOS 560K OHM 0,1W	1
	R819	J707385P224	RES MFILM 220K OHM 0,125W	1
*	R820	J707385P154	RES MFILM 150K OHM 0,125W	1
	R821	J707478P12	RES VAR 22K OHM 25%, 0,05W	1
*	R822	J707385P103	RES MFILM 10K OHM 0,125W	1
*	R824	J707478P6	RES VAR 2K2 OHM 25%, 0,05W	1
	R825	J707385P220	RES MFILM 22 0HM 0,125W	1
	R901	J707385P102	RES MFILM 1K OHM 0,125W	1
	R902	J707385P473	RES MFILM 47K OHM 0,125W	1
	R903	J707385P223	RES MFILM 22K OHM 0,125W	1
	R904	J707385P104	RES MFILM 100K OHM 0,125W	1
	R905	J707385P334	RES MFILM 330K 0HM 0,125W	1
	R906	J707476P51	RES DEPOS 150K OHM	1
	R907	J707385P473	RES MFILM 47K OHM 0,125W	1
	R908	J707385P222	RES MFILM 2,2K OHM 0,125W	1
	R909	J707385P104	RES MFILM 100K OHM 0,125W	1
	R910	J707385P104	RES MFILM 100K OHM 0,125W	1
	R911	J707385P103	RES MFILM 10K OHM 0,125W	1
	R912	J707385P101	RES MFILM 100 OHM 0,125W	1
	R913	J707385P103	RES MFILM 10K OHM 0,125W	1
	R914	J707385P271	RES MFILM 270 OHM 0,125W	1
	R915	J707385P104	RES MFILM 100K OHM 0,125W	1
	R916	J707385P104	RES MFILM 100K OHM 0,125W	1
	R917	J707385P104	RES MFILM 100K OHM 0,125W	1
	R918	J707385P104	RES MFILM 100K OHM 0,125W	1
	R919	J707385P473	RES MFILM 47K OHM 0,125W	1
	R920	J707385P473	RES MFILM 47K OHM 0,125W	1
	R921	J707385P473	RES MFILM 47K OHM 0,125W	1

	CIRCUIT POSITION	COMPONENT ITEM NUMBER	COMPONENT DESCRIPTION	QUANTITY TOTAL
	R922	J707385P224	RES MFILM 220K OHM 0,125W	1
	R923	J707385P104	RES MFILM 100K OHM 0,125W	1
	R924	J707385P184	RES MFILM 180K OHM 0,125W	1
*	R925	J707385P123	RES MFILM 12K OHM 0,125W	1
	R926	J707385P224	RES MFILM 220K OHM 0,125W	1
	R927	J707385P224	RES MFILM 220K OHM 0,125W	1
	R928	J707385P223	RES MFILM 22K OHM 0,125W	1
	R929	J707385P223	RES MFILM 22K OHM 0,125W	1
	R930	J707385P223	RES MFILM 22K OHM 0,125W	1
*	R931	J707385P102	RES MFILM 1K OHM 0,125W	1
	R932	J707385P103	RES MFILM 10K OHM 0,125W	1
	R933	J707385P334	RES MFILM 330K 0HM 0,125W	1
	R934	J707385P334	RES MFILM 330K 0HM 0,125W	1
	R935	J707385P334	RES MFILM 330K 0HM 0,125W	1
	R936	J707385P271	RES MFILM 270 OHM 0,125W	1
	R937	J707385P104	RES MFILM 100K OHM 0,125W	1
	R938	J707385P334	RES MFILM 330K 0HM 0,125W	1
	R939	J707385P103	RES MFILM 10K OHM 0,125W	1
**	R940	J707385P104	RES MFILM 100K OHM 0,125W	1
**	R941	J707385P682	RES MFILM 6,8K OHM 0,125W	1
**	R942	J707385P473	RES MFILM 47K OHM 0,125W	1
	S901	J707133P3	SWITCH	1
	U701	J707451P1	INT CKT TBA 820M	1
	U702	J707434P1	INT CKT CMOS 4051/S016	1
	U801	J707450P1	INT CKT LM358	1
	U901	J707243P1	INT CKT CMOS 4094/S016	1
	U902	J707243P1	INT CKT CMOS 4094/S016	1
	U903	J707322P1	INT CKT 14569	1
	U904	J707242P2	INT CKT CMOS 4013/S014	1
	U905	** DELETED	INT CKT, U-CTL. COP320C, PRGMD	1
*	U906	J707417P1	INT CKT PROM 256 X 4	1
	U907	J707242P1	INT CKT CMOS 4013/S014	1
	U908	J707464P1	INT CKT CMOS 4070/S014	1
	U909	J707264P1	INT CKT CMOS 4543/S016	1
	U910	J707264P1	INT CKT CMOS 4543/S016	1
	U911	J707464P1	INT CKT CMOS 4070/S014	1
	W901	A700134P9	WIRE JUMPER	
	W902	A700134P9	WIRE JUMPER	
	W903	A700134P9	WIRE JUMPER	
	W904	A700134P9	WIRE JUMPER	
	X901	J706356P4	SOC 16PIN	1

ITEM NUMBER	DESCRIPTION
K805331G1	CONTROL LOGIC CL4001, F. VHF 4M + 2M
K805331G2	CONTROL LOGIC CL4001, F. UHF 0.7M
M905465G1	ASM - CL4001 CPNT BD.,F. VHF 4M + 2M
M905465G2	ASM - CL4001 CPNT BD.,F. UHF 0.7M

P A R T S L I S T :

CIRCUIT POSITION	COMPONENT ITEM NUMBER	COMPONENT DESCRIPTION	QUANTITY
		DISPLAY AND DISPLAY MECHANICS :	
H901	J707230P1	DISPLAY, LCD	1
H902	J706022P1	DIODE LED, HP 5082-4190	1
H903	J706022P1	DIODE LED, HP 5082-4190	1
H904	J706022P1	DIODE LED, HP 5082-4190	1
H905	J706022P1	DIODE LED, HP 5082-4190	1
0003	L855331P1	HOUSING FOR DISPLAY	1
0004	L855332P1	COVER FOR DISPLAY	1
0005	K805332G1	ASM LIGHTENING DISPLAY	1
0006	J707458P1	CONTACT STRAND SILC RUBB	1
	J707469P1	LEAD FRAME	1
	L855333P1	PLATE, ACRYLIC	1
A01 :		COMPONENT BOARD CL4001 :	
C701	J707412P10	CAP POL 0,15 UF 63V	1
C702	J707444P17	CAP TA 47 UF 10V	1
C703	J707444P17	CAP TA 47 UF 10V	1
C704	J707438P5	CAP CER 1NF 50V	1
C705	J707412P10	CAP POL 0,15 UF 63V	1
C706	J707353P9	CAP ELEC 47 UF 16V	1
C707	J707412P10	CAP POL 0,15 UF 63V	1
C708	J707444P8	CAP TA 22 UF 16V	1
C709	J707412P3	CAP POL 10 NF 63V	1
C710	J707412P3	CAP POL 10 NF 63V	1
C801	J707412P3	CAP POL 10 NF 63V	1
C802	J707436P73	CAP CER 330PF 50V	1
C803	J707436P73	CAP CER 330PF 50V	1
C804	J707444P8	CAP TA 22 UF 16V	1
C805	J707444P3	CAP TA 0,47 UF 35V	1
C806	J707438P26	CAP CER 100 NF 50V	1
C807	J707353P4	CAP ELEC 1.0 UF 50V	1
C808	J707436P93	CAP CER 2,2NF 50V	1
C809	J707436P93	CAP CER 2,2NF 50V	1
C810	J707436P61	CAP CER 100PF 50V	1
C811	J707412P5	CAP POL 22 NF 63V	1
C812	J707353P7	CAP ELEC 10 UF 16V	1
C813	J707438P22	CAP CER 47NF 50V	1
C814	J707436P73	CAP CER 330PF 50V	1

CIRCUIT POSITION	COMPONENT ITEM NUMBER	COMPONENT DESCRIPTION	QUANTITY
C815	J707436P61	CAP CER 100PF 50V	1
C816	J707436P61	CAP CER 100PF 50V	1
C817	J707436P61	CAP CER 100PF 50V	1
C818	J707436P61	CAP CER 100PF 50V	1
C819	J707412P3	CAP POL 10 NF 63V	1
C820	J707412P1	CAP POL 4,7NF 63V	1
C821	J707436P73	CAP CER 330PF 50V	1
C822	J707436P87	CAP CER 1N2 5%, 50V	1
C823	J707436P61	CAP CER 100PF 50V	1
C901	J707353P4 *	CAP ELEC 1U0 20% 50V *	1
C902	J707438P14	CAP CER 10NF 50V	1
C903	J707436P61	CAP CER 100PF 50V	1
C904	J707438P22	CAP CER 47NF 50V	1
C905	J707438P14	CAP CER 10NF 50V	1
C906	J707436P93	CAP CER 2,2NF 50V	1
C907	J707438P22	CAP CER 47NF 50V	1
C908	J707438P22	CAP CER 47NF 50V	1
C909	J707438P14	CAP CER 10NF 50V	1
C910	J707353P7	CAP ELEC 10 UF 16V	1
C911	J707438P22	CAP CER 47NF 50V	1
C912	J707438P3	CAP CER 470NF 50V	1
C913	J707436P25	CAP CER 18PF 50V	1
D801	J707390P1	DIO SI SIG BAV 74	1
*	*	*	*
D904	J707390P1	DIO SI SIG BAV 74	1
D905	J707390P1	DIO SI SIG BAV 74	1
D906	J707390P1	DIO SI SIG BAV 74	1
D907	J707390P1	DIO SI SIG BAV 74	1
F901	J707468P11	FUSE 5.0A F	1
J901	J706434P2	CONN BUTTOM ENTRY	4
J902	J706434P2	CONN BUTTOM ENTRY	6
J903	J706434P2	CONN BUTTOM ENTRY	13
J904	J707442P2	CONN 10-POS FEMALE	1
J905	J707442P3	CONN 17-POS FEMALE	1
J906	J706434P2	CONN BUTTOM ENTRY	18
J907	J707442P1	CONN 4-P0S FEMALE	1
Q701	J707432P1	TSTR PNP SI BCX 18	1
Q702	J707386P1	TSTR NPN SI BCW 32	1
Q703	J707386P1	TSTR NPN SI BCW 32	1
Q801	J707387P1	TSTR PNP SI BCW 30	1
Q802	J707386P1	TSTR NPN SI BCW 32	1
Q803	J707386P1	TSTR NPN SI BCW 32	1
Q804	J707387P1	TSTR PNP SI BCW 30	1
Q901	J707432P1	TSTR PNP SI BCX 18	1
Q902	J707387P1	TSTR PNP SI BCW 30	1
Q903	J707429P1	TSTR NPN SI BCX 20	1
Q904	J707386P1	TSTR NPN SI BCW 32	1
Q905	J707387P1	TSTR PNP SI BCW 30	1
Q906	J707386P1	TSTR NPN SI BCW 32	1
Q907	J707386P1	TSTR NPN SI BCW 32	1
* Q908 *	J707386P1 *	TSTR NPN SI BCW 32 *	1
* Q909 *	J707674P1 *	TSTR PNP SI BC 558A/B *	1

CIRCUIT POSITION	COMPONENT ITEM NUMBER	COMPONENT DESCRIPTION	QUANTITY
R701	J707385P910	RES MFILM 1R0 5% 0,125W	1
R702	J707385P103	RES MFILM 10K 5% 0,125W	1
R703	J707385P471	RES MFILM 470R 5% 0,125W	1
R704	J707385P104	RES MFILM 100K 5% 0,125W	1
R705	J707385P273	RES MFILM 27K 5% 0,125W	1
R706	J707385P470	RES MFILM 47R 5% 0,125W	1
R707	J707385P223	RES MFILM 22K 5% 0,125W	1
R708	J707385P182	RES MFILM 1K8 5% 0,125W	1
R709	J707385P122	RES MFILM 1K2 5% 0,125W	1
R710	J707385P681	RES MFILM 680R 5% 0,125W	1
R711	J707385P391	RES MFILM 390R 5% 0,125W	1
R712	J707385P181	RES MFILM 180R 5% 0,125W	1
R713	J707385P121	RES MFILM 120R 5% 0,125W	1
R714	J707385P680	RES MFILM 68R 5% 0,125W	1
R715	J707385P820	RES MFILM 82R 5% 0,125W	1
R716	J707385P103	RES MFILM 10K 5% 0,125W	1
R717	J707385P222	RES MFILM 2K2 5% 0,125W	1
R801	J707385P223	RES MFILM 22K 5% 0,125W	1
R802	J707385P222	RES MFILM 2K2 5% 0,125W	1
R803	J707385P103	RES MFILM 10K 5% 0,125W	1
R804	J707385P474	RES MFILM 470K 5% 0,125W	1
R805	J707385P222	RES MFILM 2K2 5% 0,125W	1
R806	J707385P223	RES MFILM 22K 5% 0,125W	1
R807	J707385P563	RES MFILM 56K 5% 0,125W	1
R808	J707385P472	RES MFILM 4K7 5% 0,125W	1
R809	J707385P562	RES MFILM 5K6 5% 0,125W	1
R810	J707385P392	RES MFILM 3K9 5% 0,125W	1
R811	J707385P123	RES MFILM 12K 5% 0,125W	1
R812	J707478P8	RES VAR 4K7 20% 0,05W	1
R813	J707385P123	RES MFILM 12K 5% 0,125W	1
R814	J707385P184	RES MFILM 180K 5% 0,125W	1
R815	J707385P823	RES MFILM 82K 5% 0,125W	1
R816	J707385P124	RES MFILM 120K 5% 0,125W	1
R817	J707385P683	RES MFILM 68K 5% 0,125W	1
R818	J707476P58	RES DEPOS 560K 10% 0,1W	1
R819	J707385P224	RES MFILM 220K 5% 0,125W	1
R820	J707385P154	RES MFILM 150K 5% 0,125W	1
R821	J707478P12	RES VAR 22K 25%, 0,05W	1
R822	J707385P103	RES MFILM 10K OHM 0,125W	1
R824	J707478P6	RES VAR 2K2 OHM 25%, 0,05W	1
R825	J707385P220	RES MFILM 22R 5% 0,125W	1
R901	J707385P102	RES MFILM 1K 5% 0,125W	1
R902	J707385P473	RES MFILM 47K 5% 0,125W	1
R903	J707385P223	RES MFILM 22K 5% 0,125W	1
R904	J707385P104	RES MFILM 100K 5% 0,125W	1
R905	J707385P334	RES MFILM 330K 5% 0,125W	1
R906	J707476P51	RES DEPOS 150K 5% 0,1W	1
R907	J707385P473	RES MFILM 47K 5% 0,125W	1
R908	J707385P222	RES MFILM 2K2 5% 0,125W	1
R909	J707385P104	RES MFILM 100K 5% 0,125W	1
R910	J707385P104	RES MFILM 100K 5% 0,125W	1
R911	J707385P103	RES MFILM 10K 5% 0,125W	1
R912	J707385P101	RES MFILM 100R 5% 0,125W	1
R913	J707385P103	RES MFILM 10K 5% 0,125W	1
R914	J707385P271	RES MFILM 270R 5% 0,125W	1
R915	J707385P104	RES MFILM 100K 5% 0,125W	1

	CIRCUIT POSITION	COMPONENT ITEM NUMBER	COMPONENT DESCRIPTION	QUANTITY
	R916	J707385P104	RES MFILM 100K 5% 0,125W	1
	R917	J707385P104	RES MFILM 100K 5% 0,125W	1
	R918	J707385P104	RES MFILM 100K 5% 0,125W	1
	R919	J707385P473	RES MFILM 47K 5% 0,125W	1
	R920	J707385P473	RES MFILM 47K 5% 0,125W	1
	R921	J707385P473	RES MFILM 47K 5% 0,125W	1
	R922	J707385P224	RES MFILM 220K 5% 0,125W	1
	R923	J707385P104	RES MFILM 100K 5% 0,125W	1
	R924	J707385P184	RES MFILM 180K 5% 0,125W	1
	R925	J707385P123	RES MFILM 12K 5% 0,125W	1
	R926	J707385P224	RES MFILM 220K 5% 0,125W	1
	R927	J707385P224	RES MFILM 220K 5% 0,125W	1
	R928	J707385P223	RES MFILM 22K 5% 0,125W	1
	R929	J707385P223	RES MFILM 22K 5% 0,125W	1
	R930	J707385P223	RES MFILM 22K 5% 0,125W	1
	R931	J707385P102	RES MFILM 1K0 5% 0,125W	1
	R932	J707385P103	RES MFILM 10K 5% 0,125W	1
	R933	J707385P334	RES MFILM 330K 5% 0,125W	1
	R934	J707385P334	RES MFILM 330K 5% 0,125W	1
	R935	J707385P334	RES MFILM 330K 5% 0,125W	1
	R936	J707385P271	RES MFILM 270R 5% 0,125W	1
	R937	J707385P104	RES MFILM 100K 5% 0,125W	1
	R938	J707385P334	RES MFILM 330K 5% 0,125W	1
	R939	J707385P103	RES MFILM 10K 5% 0,125W	1
	R940	J707385P104	RES MFILM 100K 5% 0,125W	1
	R941	J707385P103 *	* RES MFILM 10K 5% 0,125W	1
	R942	J707385P473	RES MFILM 47K 5% 0,125W	1
*	R943	* J707385P473	* RES MFILM 47K 5% 0,125W *	1
*	R944	* J707385P223	* RES MFILM 22K 5% 0,125W *	1
	S901	J707133P3	SWITCH	1
	U701	J707451P1	INT CKT TBA 820M	1
	U702	J707434P1	INT CKT CMOS 4051/S016	1
	U801	J707450P1	INT CKT LM358	1
	U901	J707243P1	INT CKT CMOS 4094/S016	1
	U902	J707243P1	INT CKT CMOS 4094/S016	1
	U903	J707322P1	INT CKT 14569	1
	U904	J707242P2	INT CKT CMOS 4013/S014	1
	U905	J708019P2	IC, U-CTL. COP324C, PRGMD NOTE:"FOR CQP433X + CQP411X"	1
	U905	M905852G2	INT CKT,U-CTL.COP324C,PRGMD NOTE: "FOR CQP 466X ONLY"	1
	U906	J707417P1	INT CKT PROM 256 X 4	(1)
	U907	J707242P1	INT CKT CMOS 4013/S014	1
	U908	J707464P1	INT CKT CMOS 4070/S014	1
	U909	J707264P1	INT CKT CMOS 4543/S016	1
	U910	J707264P1	INT CKT CMOS 4543/S016	1
	U911	J707464P1	INT CKT CMOS 4070/S014	1
	W901	A700134P9	WIRE JUMPER	0.001KG
	W902	A700134P9	WIRE JUMPER	0.001KG
	W903	A700134P9	WIRE JUMPER	0.001KG

CIRCUIT POSITION	COMPONENT ITEM NUMBER	COMPONENT DESCRIPTION	QUANTITY
W904	A700134P9	WIRE JUMPER	0.001KG
X901	J706356P4	SOC 16PIN	1
	J708413P1	SLVG SIL RUBB NAT	27 MM

Storno

Storno

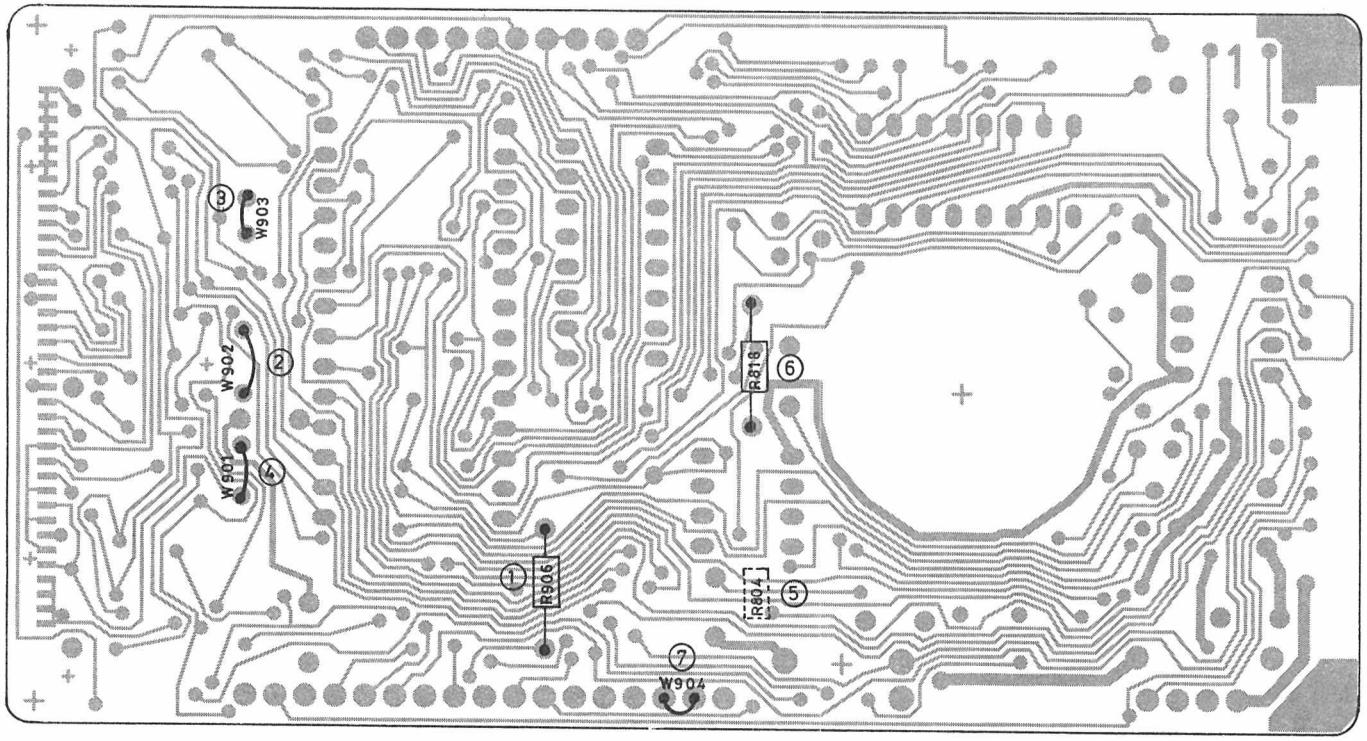

① REMOVE FOR NO ACCOUSTIC FEED-BACK AND NO ALARM TONE

② CUT TO DISABLE LEFT TONE DIGIT ON DISPLAY (X10)

③ CUT TO DISABLE RIGHT TONE DIGIT ON DISPLAY (X1)

④ CUT TO DISABLE ♪ - SYMBOL ON DISPLAY

⑤ R804 ON CHIP SIDE

STANDARD	MIC. SENSIVITY	: 330K
+6dB	— " —	: 680K
-6dB	— " —	: 150K

⑥ CUT FOR 12,5 KHz CHANNELSPACING AND SWEDEN (MOD. RESPONSE).

⑦ REMOVE IF TONE OPTION IS USED

CONTROL LOGIC CL4001 STRAPPING INSTRUCTION

D403.383/2

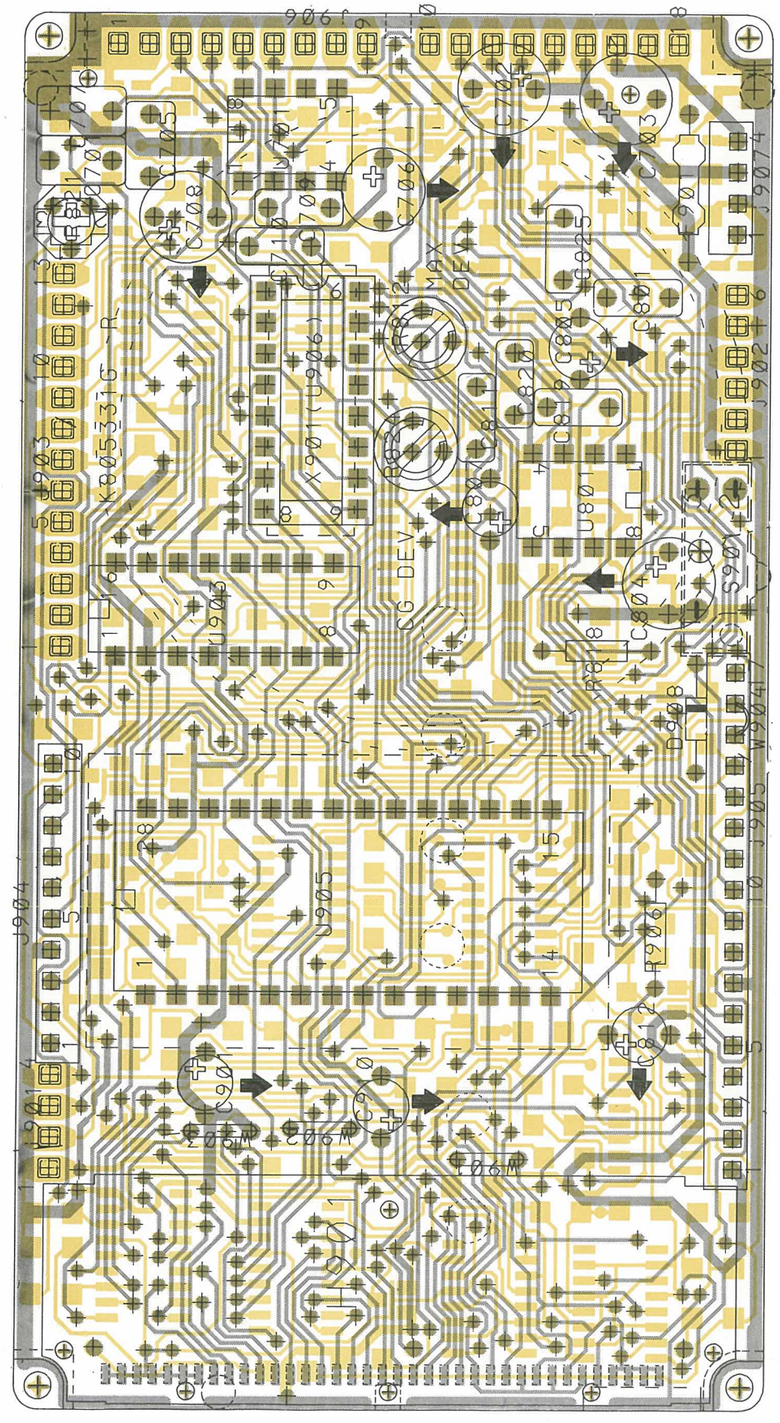

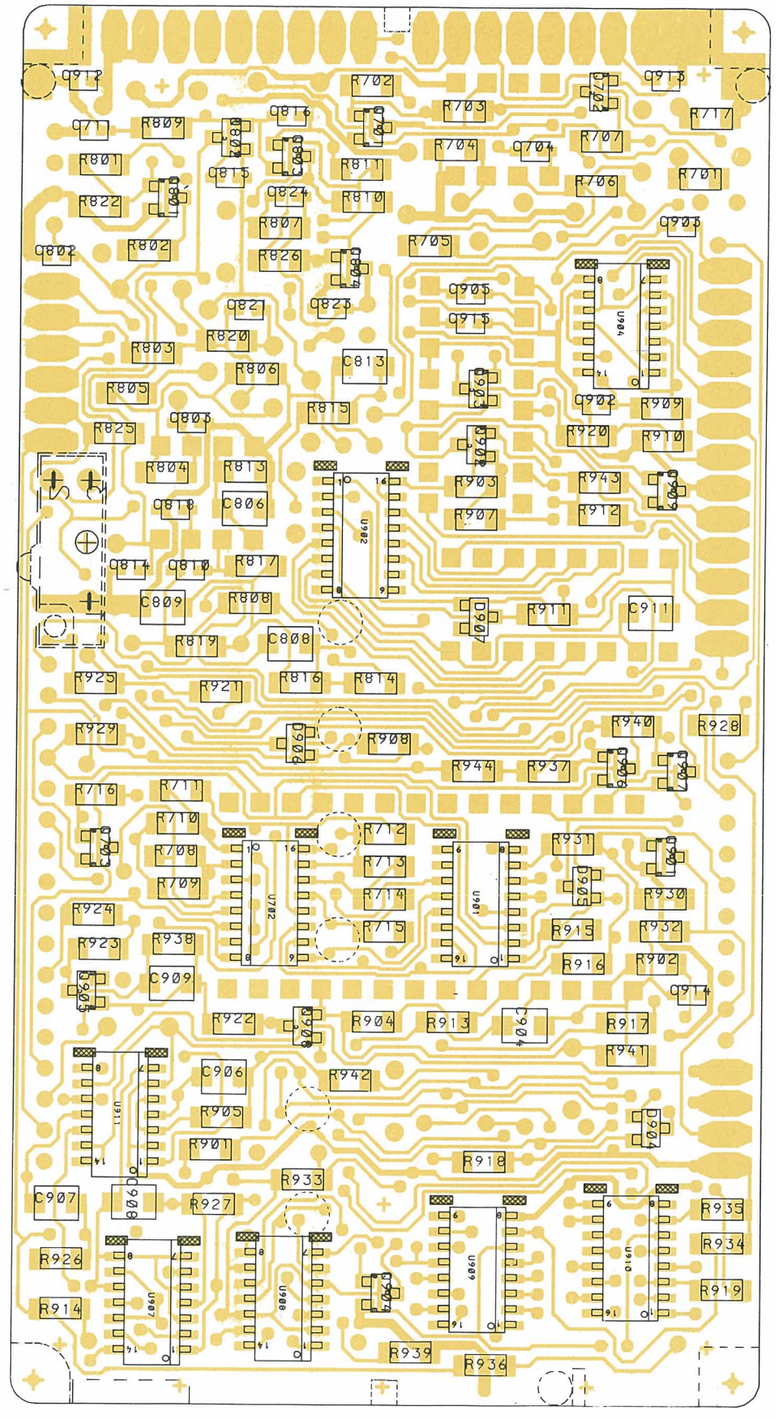

CONTROL LOGIC BOARD CL4001
COMPONENT LAYOUT

D403.760/4 **REV.11**

CODE NO. MOUNTED BOARD
M905465G1 - VHF
M905465G1 - UHF

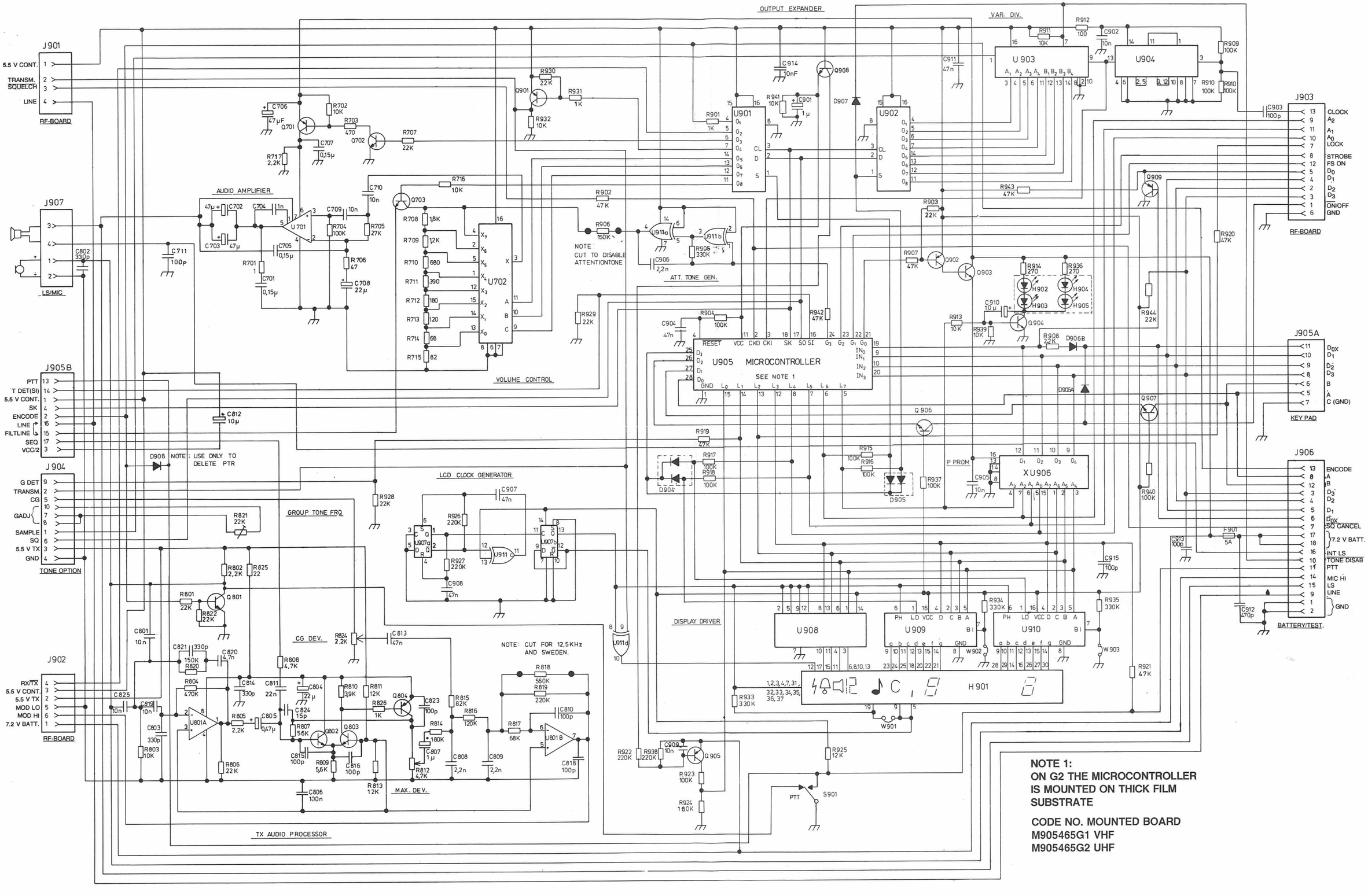

CONTROL LOGIC BOARD CL4001

REV.K **D403.759/4**

Storno

Storno

CONTROL LOGIC CL4002

CODE NO. M905679G1 | D403.554

Storno

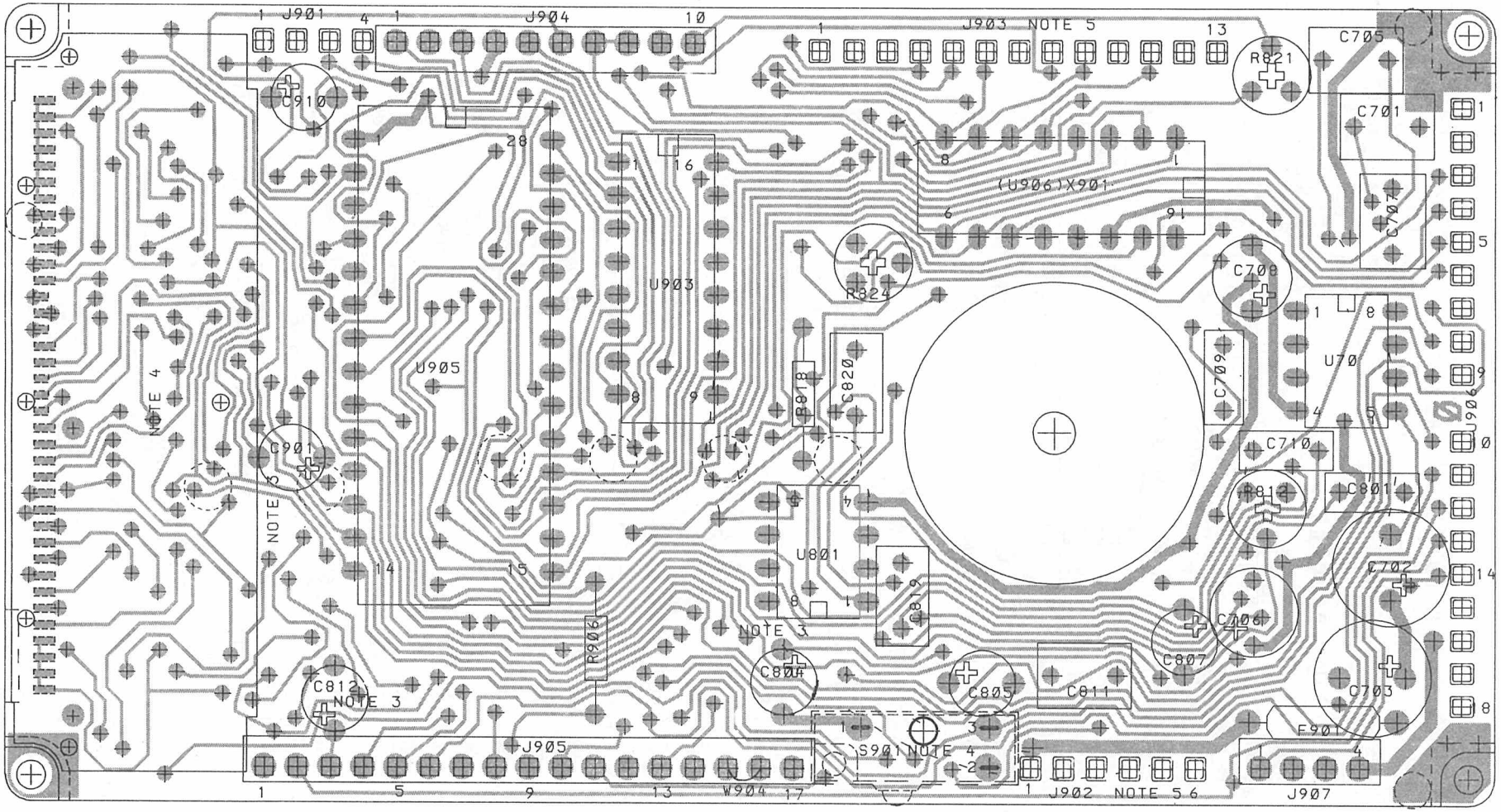

CONTROL LOGIC CL4002
COMPONENT LAYOUT
COMPONENT SIDE

CODE No. K805449G1 | D403.512

Storno

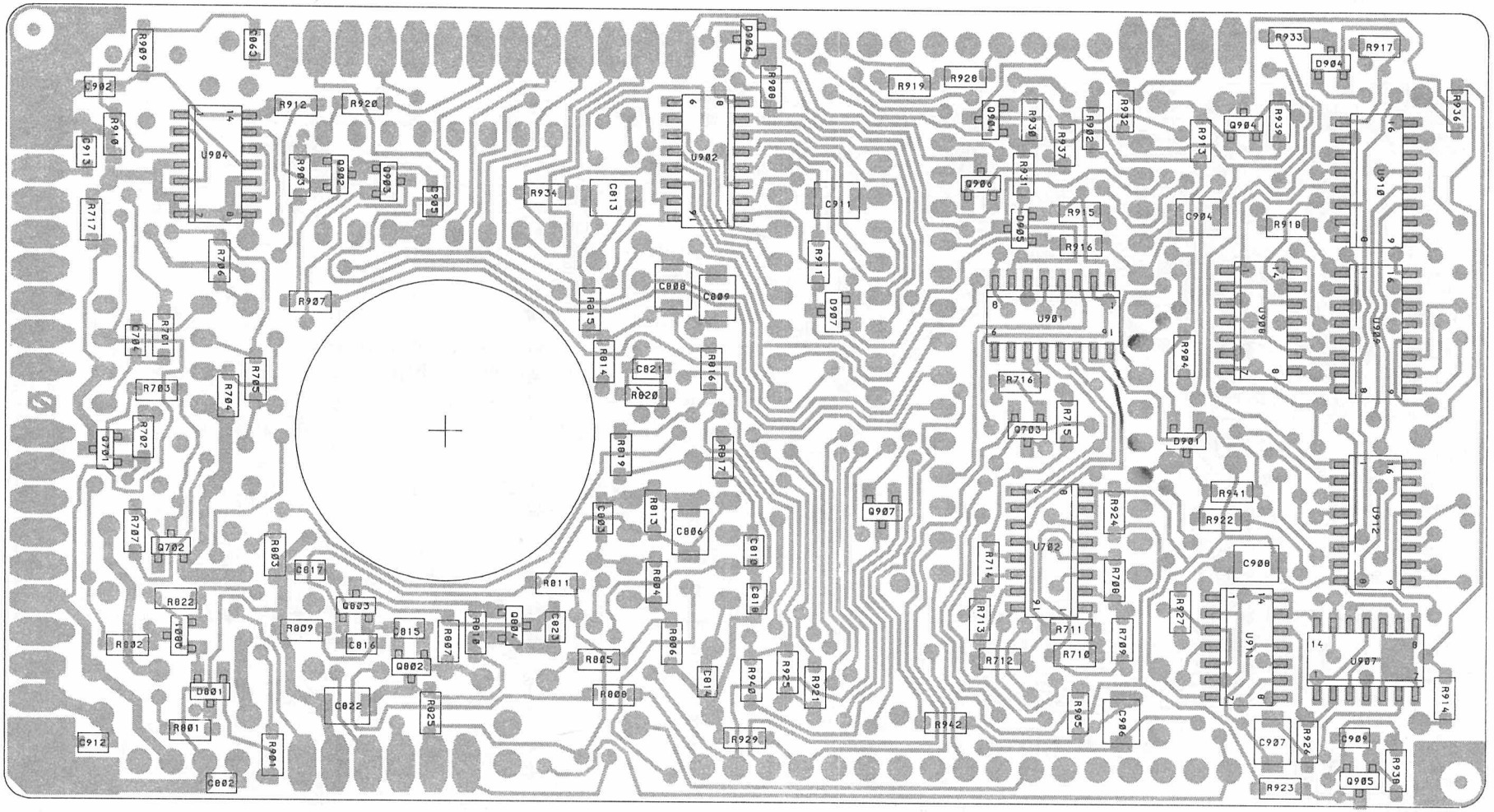

CONTROL LOGIC CL4002
COMPONENT LAYOUT
CHIP SIDE

CODE No. K805449G1 | D403.513

Storno

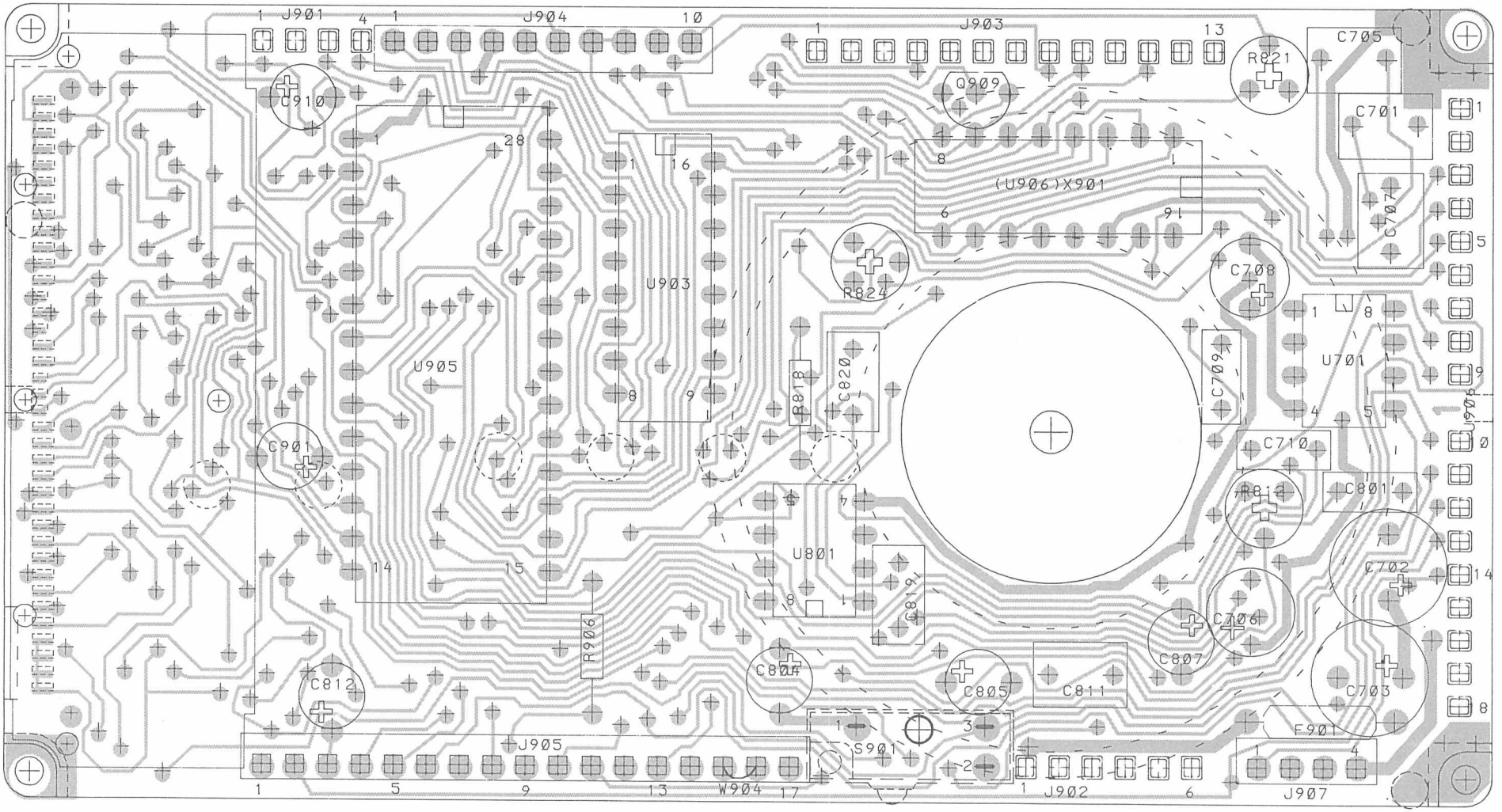

CODE NO.
M905679G1 - VHF
M905679G2 - UHF

COMPONENT BOARD FOR CONTROL LOGIC CL4002
COMPONENT LAYOUT - COMPONENT SIDE

D403. 824

Storno

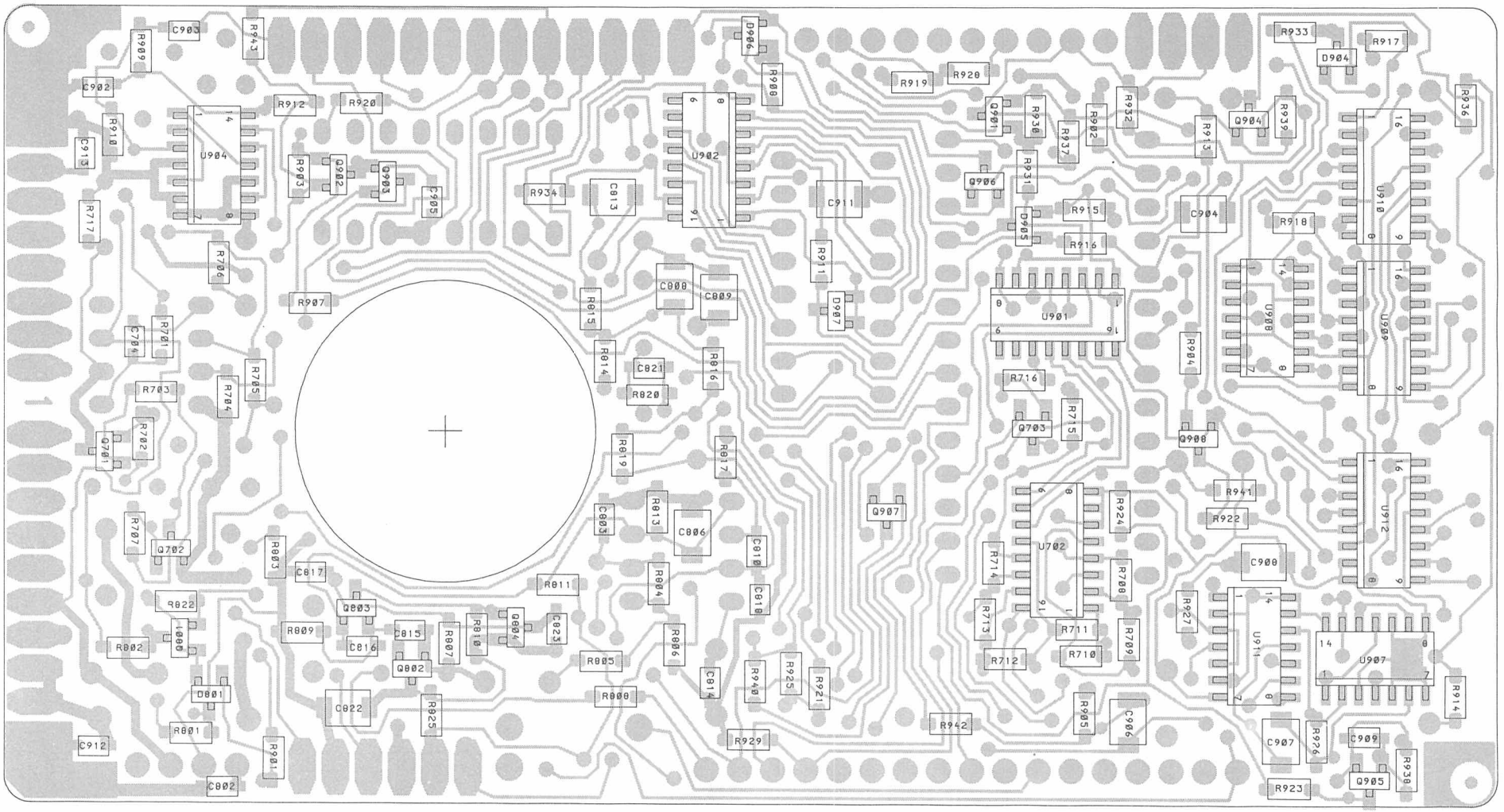

CODE NO.
M905679G1 - VHF
M905679G2 - UHF

COMPONENT BOARD FOR CONTROL LOGIC CL4002
COMPONENT LAYOUT - CHIP SIDE

D403.825

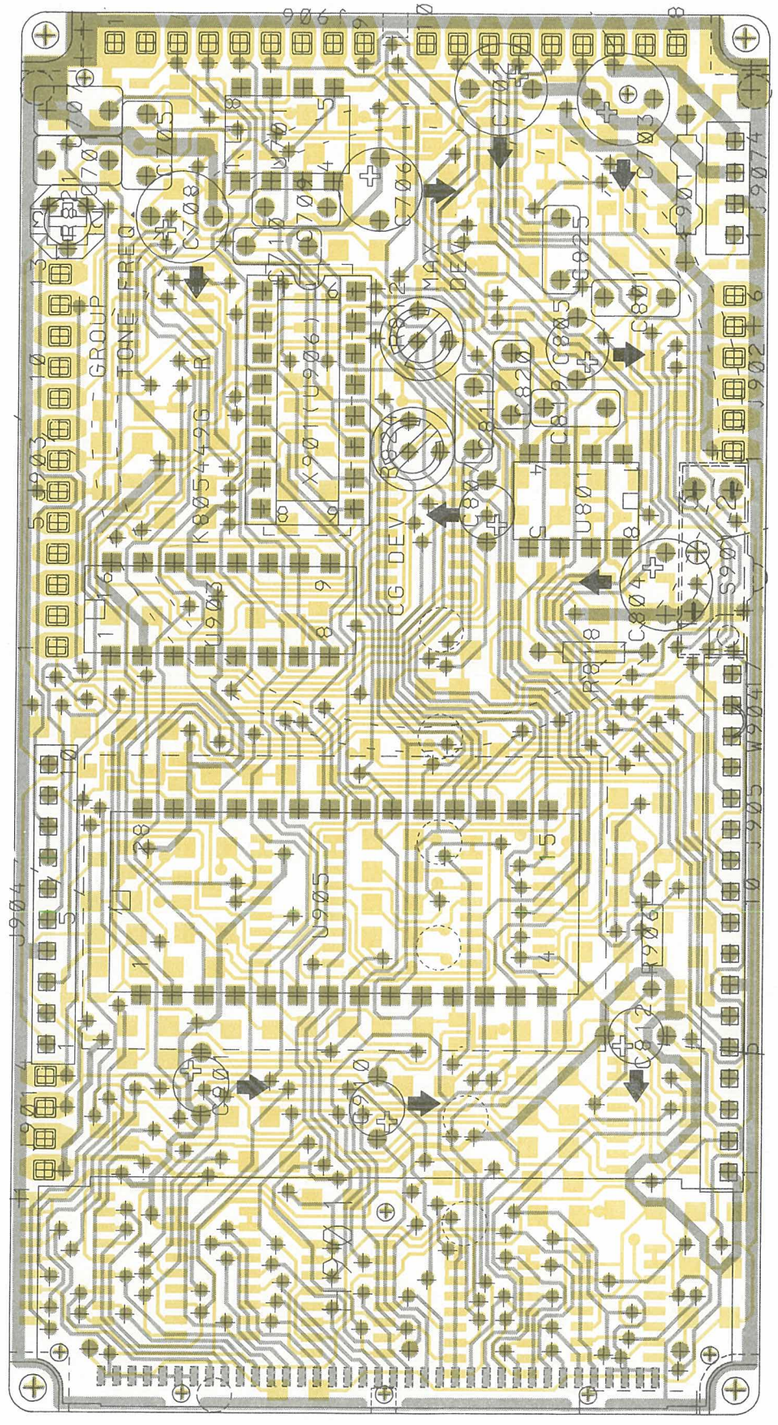

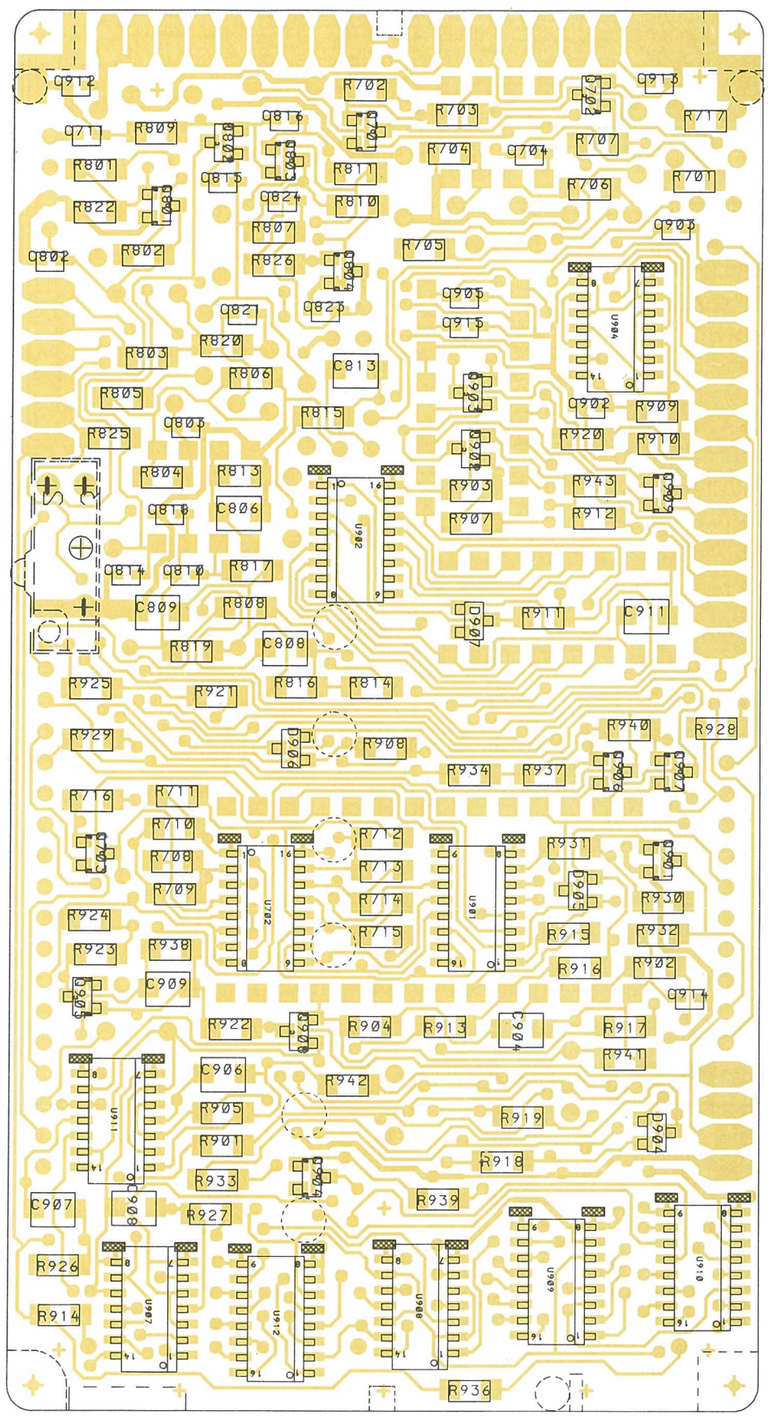

CONTROL LOGIC BOARD CL4002
COMPONENT LAYOUT

D403.824/5 **REV.7**

CODE NO. MOUNTED BOARD
M905679G2 - VHF/UHF
(M905679G1 - VHF)

ITEM NUMBER	DESCRIPTION
K805449G1	CL 4002 -10CH-
M905679G1	SUB ASM - CL4002 CPNT BD

P A R T S L I S T :

CIRCUIT POSITION	COMPONENT ITEM NUMBER	COMPONENT DESCRIPTION	QUANTITY TOTAL
H901	J707230P1	DIS LT	1
S901	J707133P3	SW	1
C701	J707412P10	CAP POL 0,15MF 63V	1
C702	J707444P17	CAP TA 47MF 10V	1
C703	J707444P17	CAP TA 47MF 10V	1
C704	J707438P5	CAP CER 1NF 50V	1
C705	J707412P10	CAP POL 0,15MF 63V	1
C706	J707353P9	CAP ELEC 47MF 16V	1
C707	J707412P10	CAP POL 0,15MF 63V	1
C708	J707444P8	CAP TA 22MF 16V	1
C709	J707412P3	CAP POL 10NF 63V	1
C710	J707412P3	CAP POL 10NF 63V	1
C801	J707412P3	CAP POL 10NF 63V	1
C802	J707436P73	CAP CER 330PF 50V	1
C803	J707436P73	CAP CER 330PF 50V	1
C804	J707444P8	CAP TA 22MF 16V	1
C805	J707444P3	CAP TA 0,47MF 35V	1
C806	J707438P26	CAP CER 100NF 50V	1
C807	J707353P4	CAP ELEC 1MF 50V	1
C808	J707436P93	CAP CER 2,2NF 50V	1
C809	J707436P93	CAP CER 2,2NF 50V	1
C810	J707436P61	CAP CER 100PF 50V	1
C811	J707412P5	CAP POL 0,022MF 63V	1
C812	J707353P7	CAP ELEC 10MF 16V	1
C813	J707438P22	CAP CER 47NF 50V	1
C814	J707436P73	CAP CER 330PF 50V	1
C815	J707436P61	CAP CER 100PF 50V	1
C816	J707436P61	CAP CER 100PF 50V	1
C817	J707436P61	CAP CER 100PF 50V	1
C818	J707436P61	CAP CER 100PF 50V	1
C819	J707412P3	CAP POL 10NF 63V	1
C820	J707412P1	CAP POL 4,7NF 63V	1
C821	J707436P73	CAP CER 330PF 50V	1
C822	J707436P87	CAP CER 1,2NF 50V	1
C823	J707436P61	CAP CER 100PF 50V	1
C901	J707353P7	CAP ELEC 10MF 16V	1
C902	J707438P14	CAP CER 10NF 50V	1
C903	J707436P61	CAP CER 100PF 50V	1
C904	J707438P22	CAP CER 47NF 50V	1
C905	J707438P14	CAP CER 10NF 50V	1
C906	J707436P93	CAP CER 2,2NF 50V	1
C907	J707438P22	CAP CER 47NF 50V	1
C908	J707438P22	CAP CER 47NF 50V	1
C909	J707438P14	CAP CER 10NF 50V	1
C910	J707353P7	CAP ELEC 10MF 16V	1
C911	J707438P22	CAP CER 47NF 50V	1
C912	J707438P3	CAP CER 470PF 50V	1
C913	J707436P25	CAP CER 18PF 50V	1
D801	J707390P1	DIO SI BAV 70	1
D901	J707390P1	DIO SI BAV 70	1
D904	J707390P1	DIO SI BAV 70	1
D905	J707390P1	DIO SI BAV 70	1
D906	J707390P1	DIO SI BAV 70	1

CIRCUIT POSITION	COMPONENT ITEM NUMBER	COMPONENT DESCRIPTION	QUANTITY TOTAL
D907	J707390P1	DIO SI BAV 70	1
F901	J707468P11	FUSE 5A	1
J901	J706434P2	CONN BUTTOM ENTRY	4
J902	J706434P2	CONN BUTTOM ENTRY	6
J903	J706434P2	CONN BUTTOM ENTRY	3
J904	J707442P2	CONN 10-POS FEMALE	1
J905	J707442P3	CONN 17-POS FEMALE	1
J906	J706434P2	CONN BUTTOM ENTRY	8
J907	J707442P1	CONN 4-POS FEMALE	1
Q701	J707432P1	TSTR BCX18	1
Q702	J707386P1	TSTR BCW 32	1
Q703	J707386P1	TSTR BCW 32	1
Q801	J707387P1	TSTR BCW 30	1
Q802	J707386P1	TSTR BCW 32	1
Q803	J707386P1	TSTR BCW 32	1
Q804	J707387P1	TSTR BCW 30	1
Q901	J707432P1	TSTR BCX18	1
Q902	J707387P1	TSTR BCW 30	1
Q903	J707429P1	TSTR BCX 20	1
Q904	J707386P1	TSTR BCW 32	1
Q905	J707387P1	TSTR BCW 30	1
Q906	J707386P1	TSTR BCW 32	1
Q907	J707386P1	TSTR BCW 32	1
R701	J707385P910	RES MFILM 1 OHM 0,125W	1
R702	J707385P103	RES MFILM 10K OHM 0,125W	1
R703	J707385P471	RES MFILM 470 OHM 0,125W	1
R704	J707385P104	RES MFILM 100K OHM 0,125W	1
R705	J707385P273	RES MFILM 27K OHM 0,125W	1
R706	J707385P470	RES MFILM 47 OHM 0,125W	1
R707	J707385P223	RES MFILM 22K OHM 0,125W	1
R708	J707385P182	RES MFILM 1,8K OHM 0,125W	1
R709	J707385P122	RES MFILM 1,2K OHM 0,125W	1
R710	J707385P681	RES MFILM 680 OHM 0,125W	1
R711	J707385P391	RES MFILM 390 OHM 0,125W	1
R712	J707385P181	RES MFILM 180 OHM 0,125W	1
R713	J707385P121	RES MFILM 120 OHM 0,125W	1
R714	J707385P680	RES MFILM 68 OHM 0,125W	1
R715	J707385P820	RES MFILM 82 OHM 0,125W	1
R716	J707385P103	RES MFILM 10K OHM 0,125W	1
R717	J707385P222	RES MFILM 2,2K OHM 0,125W	1
R801	J707385P223	RES MFILM 22K OHM 0,125W	1
R802	J707385P222	RES MFILM 2,2K OHM 0,125W	1
R803	J707385P103	RES MFILM 10K OHM 0,125W	1
R804	J707385P474	RES MFILM 470K OHM 0,125W	1
R805	J707385P222	RES MFILM 2,2K OHM 0,125W	1
R806	J707385P223	RES MFILM 22K OHM 0,125W	1
R807	J707385P563	RES MFILM 56K OHM 0,125W	1
R808	J707385P472	RES MFILM 4,7K OHM 0,125W	1
R809	J707385P562	RES MFILM 5,6K OHM 0,125W	1
R810	J707385P392	RES MFILM 3,9K OHM 0,125W	1
R811	J707385P123	RES MFILM 12K OHM 0,125W	1
R812	J707478P8	RES VAR 4,7K OHM 0,05W	1
R813	J707385P123	RES MFILM 12K OHM 0,125W	1
R814	J707385P184	RES MFILM 180K OHM 0,125W	1
R815	J707385P823	RES MFILM 82K OHM 0,125W	1
R816	J707385P124	RES MFILM 120K OHM 0,125W	1
R817	J707385P683	RES MFILM 68K OHM 0,125W	1
R818	J707476P58	RES DEPOS 560K OHM 0,1W	1
R819	J707385P224	RES MFILM 220K OHM 0,125W	1
R820	J707385P154	RES MFILM 150K OHM 0,125W	1

CIRCUIT POSITION	COMPONENT ITEM NUMBER	COMPONENT DESCRIPTION	QUANTITY TOTAL
R821	J707478P12	RES VAR 22K OHM 0,05W	1
R822	J707385P103	RES MFILM 10K OHM 0,125W	1
R824	J707478P6	RES VAR 2,2K OHM 0,05W	1
R825	J707385P220	RES MFILM 22 OHM 0,125W	1
R901	J707385P102	RES MFILM 1K OHM 0,125W	1
R902	J707385P473	RES MFILM 47K OHM 0,125W	1
R903	J707385P223	RES MFILM 22K OHM 0,125W	1
R904	J707385P104	RES MFILM 100K OHM 0,125W	1
R905	J707385P334	RES MFILM 330K OHM 0,125W	1
R906	J707476P51	RES DEPOS 150K OHM	1
R907	J707385P473	RES MFILM 47K OHM 0,125W	1
R908	J707385P222	RES MFILM 2,2K OHM 0,125W	1
R909	J707385P104	RES MFILM 100K OHM 0,125W	1
R910	J707385P104	RES MFILM 100K OHM 0,125W	1
R911	J707385P103	RES MFILM 10K OHM 0,125W	1
R912	J707385P101	RES MFILM 100 OHM 0,125W	1
R913	J707385P103	RES MFILM 10K OHM 0,125W	1
R914	J707385P271	RES MFILM 270 OHM 0,125W	1
R915	J707385P104	RES MFILM 100K OHM 0,125W	1
R916	J707385P104	RES MFILM 100K OHM 0,125W	1
R917	J707385P104	RES MFILM 100K OHM 0,125W	1
R918	J707385P104	RES MFILM 100K OHM 0,125W	1
R919	J707385P473	RES MFILM 47K OHM 0,125W	1
R920	J707385P473	RES MFILM 47K OHM 0,125W	1
R921	J707385P473	RES MFILM 47K OHM 0,125W	1
R922	J707385P224	RES MFILM 220K OHM 0,125W	1
R923	J707385P104	RES MFILM 100K OHM 0,125W	1
R924	J707385P184	RES MFILM 180K OHM 0,125W	1
R925	J707385P123	RES MFILM 12K OHM 0,125W	1
R926	J707385P224	RES MFILM 220K OHM 0,125W	1
R927	J707385P224	RES MFILM 220K OHM 0,125W	1
R928	J707385P223	RES MFILM 22K OHM 0,125W	1
R929	J707385P223	RES MFILM 22K OHM 0,125W	1
R930	J707385P223	RES MFILM 22K OHM 0,125W	1
R931	J707385P102	RES MFILM 1K OHM 0,125W	1
R932	J707385P103	RES MFILM 10K OHM 0,125W	1
R933	J707385P473	RES MFILM 47K OHM 0,125W	1
R934	J707385P223	RES MFILM 22K OHM 0,125W	1
R936	J707385P271	RES MFILM 270 OHM 0,125W	1
R937	J707385P104	RES MFILM 100K OHM 0,125W	1
R938	J707385P334	RES MFILM 330K OHM 0,125W	1
R939	J707385P103	RES MFILM 10K OHM 0,125W	1
R940	J707385P104	RES MFILM 100K OHM 0,125W	1
R941	J707385P682	RES MFILM 6,8K OHM 0,125W	1
R942	J707385P473	RES MFILM 47K OHM 0,125W	1
U701	J707451P1	INT CKT TBA 820M	1
U702	J707434P1	INT CKT 4051/SO16	1
U801	J707450P1	INT CKT LM358	1
U901	J707243P1	INT CKT 4094/SO16	1
U902	J707243P1	INT CKT 4094/SO16	1
U903	J707322P1	INT CKT 14569	1
U904	J707242P2	INT CKT 4013/SO14	1
U905	J708019P1	INT CKT COP324C	1
U907	J707242P1	INT CKT 4013/SO14	1
U908	J707464P1	INT CKT 4070/SO14	1
U909	J707264P1	INT CKT 4543/SO16	1
U910	J707264P1	INT CKT 4543/SO16	1
U911	J707464P1	INT CKT 4070/SO14	1
U912	J707264P1	INT CKT 4543/SO16	1
X901	J706356P4	SOC 16 PIN	1

CIRCUIT POSITION	COMPONENT ITEM NUMBER	COMPONENT DESCRIPTION	QUANTITY TOTAL
X902	J706331P7	SOC 28 PIN	1
0003	L855331P1	HSG DIS	1
0004	L855332P1	COV DIS	1
0005	K805332G1	DIS LT ASM	1
	J706022P1	DIO LT HP 5082-4190	4
	J707469P1	LEAD FRAME	3
	L855333P1	PLT,ACRYLIC	1
0006	J707458P1	CONT STR SIL	1

ITEM NUMBER	DESCRIPTION
K805449G1	CL 4002 -10CH-
M905679G1	SUB ASM - CL4002 CPNT BD

P A R T S L I S T :

CIRCUIT POSITION	COMPONENT ITEM NUMBER	COMPONENT DESCRIPTION	QUANTITY TOTAL
		DISPLAY AND DISPLAY MECHANICS:	
H901	J707230P1	DIS LT	1
H902	J706022P1	DIO LT HP 5082-4190	1
H903	J706022P1	DIO LT HP 5082-4190	1
H904	J706022P1	DIO LT HP 5082-4190	1
H905	J706022P1	DIO LT HP 5082-4190	1
0003	L855331P1	HSG DIS	1
0004	L855332P1	COV DIS	1
0005	K805332G1	DIS LT ASM	1
0006	J707458P1	CONT STR SIL	1
	J707469P1	LEAD FRAME	3
	L855333P1	PLT,ACRYLIC	1
		COMPONENT BOARD CL4002:	
C701	J707412P10	CAP POL 0,15MF 63V	1
C702	J707444P17	CAP TA 47MF 10V	1
C703	J707444P17	CAP TA 47MF 10V	1
C704	J707438P5	CAP CER 1NF 50V	1
C705	J707412P10	CAP POL 0,15MF 63V	1
C706	J707353P9	CAP ELEC 47MF 16V	1
C707	J707412P10	CAP POL 0,15MF 63V	1
C708	J707444P8	CAP TA 22MF 16V	1
C709	J707412P3	CAP POL 10NF 63V	1
C710	J707412P3	CAP POL 10NF 63V	1
C801	J707412P3	CAP POL 10NF 63V	1
C802	J707436P73	CAP CER 330PF 50V	1
C803	J707436P73	CAP CER 330PF 50V	1
C804	J707444P8	CAP TA 22MF 16V	1
C805	J707444P3	CAP TA 0,47MF 35V	1
C806	J707438P26	CAP CER 100NF 50V	1
C807	J707353P4	CAP ELEC 1MF 50V	1
C808	J707436P93	CAP CER 2,2NF 50V	1
C809	J707436P93	CAP CER 2,2NF 50V	1
C810	J707436P61	CAP CER 100PF 50V	1
C811	J707412P5	CAP POL 0,022MF 63V	1
C812	J707353P7	CAP ELEC 10MF 16V	1
C813	J707438P22	CAP CER 47NF 50V	1
C814	J707436P73	CAP CER 330PF 50V	1
C815	J707436P61	CAP CER 100PF 50V	1
C816	J707436P61	CAP CER 100PF 50V	1
C817	J707436P61	CAP CER 100PF 50V	1
C818	J707436P61	CAP CER 100PF 50V	1
C819	J707412P3	CAP POL 10NF 63V	1
C820	J707412P1	CAP POL 4,7NF 63V	1

CIRCUIT POSITION	COMPONENT ITEM NUMBER	COMPONENT DESCRIPTION	QUANTITY TOTAL
C821	J707436P73	CAP CER 330PF 50V	1
C822	J707436P87	CAP CER 1,2NF 50V	1
C823	J707436P61	CAP CER 100PF 50V	1
C901	J707353P7	CAP ELEC 10MF 16V	1
C902	J707438P14	CAP CER 10NF 50V	1
C903	J707436P61	CAP CER 100PF 50V	1
C904	J707438P22	CAP CER 47NF 50V	1
C905	J707438P14	CAP CER 10NF 50V	1
C906	J707436P93	CAP CER 2,2NF 50V	1
C907	J707438P22	CAP CER 47NF 50V	1
C908	J707438P22	CAP CER 47NF 50V	1
C909	J707438P14	CAP CER 10NF 50V	1
C910	J707353P7	CAP ELEC 10MF 16V	1
C911	J707438P22	CAP CER 47NF 50V	1
C912	J707438P3	CAP CER 470PF 50V	1
C913	J707436P25	CAP CER 18PF 50V	1
D801	J707390P1	DIO SIG SI BAV 74	1
D901	J707390P1	DIO SIG SI BAV 74	1
D904	J707390P1	DIO SIG SI BAV 74	1
D905	J707390P1	DIO SIG SI BAV 74	1
D906	J707390P1	DIO SIG SI BAV 74	1
D907	J707390P1	DIO SIG SI BAV 74	1
F901	J707468P11	FUSE 5A	1
J901	J706434P2	CONN BOTTOM ENTRY	4
J902	J706434P2	CONN BOTTOM ENTRY	6
J903	J706434P2	CONN BOTTOM ENTRY	13
J904	J707442P2	CONN 10-POS FEMALE	1
J905	J707442P3	CONN 17-POS FEMALE	1
J906	J706434P2	CONN BUTTOM ENTRY	18
J907	J707442P1	CONN 4-POS FEMALE	1
Q701	J707432P1	TSTR BCX18	1
Q702	J707386P1	TSTR NPN SI BCW 32	1
Q703	J707386P1	TSTR NPN SI BCW 32	1
Q801	J707387P1	TSTR PNP SI BCW 30	1
Q802	J707386P1	TSTR NPN SI BCW 32	1
Q803	J707386P1	TSTR NPN SI BCW 32	1
Q804	J707387P1	TSTR PNP SI BCW 30	1
Q901	J707432P1	TSTR BCX18	1
Q902	J707387P1	TSTR PNP SI BCW 30	1
Q903	J707429P1	TSTR BCX 20	1
Q904	J707386P1	TSTR NPN SI BCW 32	1
Q905	J707387P1	TSTR PNP SI BCW 30	1
Q906	J707386P1	TSTR NPN SI BCW 32	1
Q907	J707386P1	TSTR NPN SI BCW 32	1
R701	J707385P910	RES MFILM 1 OHM 0,125W	1
R702	J707385P103	RES MFILM 10K OHM 0,125W	1
R703	J707385P471	RES MFILM 470 OHM 0,125W	1
R704	J707385P104	RES MFILM 100K OHM 0,125W	1
R705	J707385P273	RES MFILM 27K OHM 0,125W	1
R706	J707385P470	RES MFILM 47 OHM 0,125W	1
R707	J707385P223	RES MFILM 22K OHM 0,125W	1
R708	J707385P182	RES MFILM 1,8K OHM 0,125W	1

CIRCUIT POSITION	COMPONENT ITEM NUMBER	COMPONENT DESCRIPTION	QUANTITY TOTAL
R709	J707385P122	RES MFILM 1,2K OHM 0,125W	1
R710	J707385P681	RES MFILM 680 OHM 0,125W	1
R711	J707385P391	RES MFILM 390 OHM 0,125W	1
R712	J707385P181	RES MFILM 180 OHM 0,125W	1
R713	J707385P121	RES MFILM 120 OHM 0,125W	1
R714	J707385P680	RES MFILM 68 OHM 0,125W	1
R715	J707385P820	RES MFILM 82 OHM 0,125W	1
R716	J707385P103	RES MFILM 10K OHM 0,125W	1
R717	J707385P222	RES MFILM 2,2K OHM 0,125W	1
R801	J707385P223	RES MFILM 22K OHM 0,125W	1
R802	J707385P222	RES MFILM 2,2K OHM 0,125W	1
R803	J707385P103	RES MFILM 10K OHM 0,125W	1
R804	J707385P474	RES MFILM 470K OHM 0,125W	1
R805	J707385P222	RES MFILM 2,2K OHM 0,125W	1
R806	J707385P223	RES MFILM 22K OHM 0,125W	1
R807	J707385P563	RES MFILM 56K OHM 0,125W	1
R808	J707385P472	RES MFILM 4,7K OHM 0,125W	1
R809	J707385P562	RES MFILM 5,6K OHM 0,125W	1
R810	J707385P392	RES MFILM 3,9K OHM 0,125W	1
R811	J707385P123	RES MFILM 12K OHM 0,125W	1
R812	J707478P8	RES VAR 4,7K OHM 0,05W	1
R813	J707385P123	RES MFILM 12K OHM 0,125W	1
R814	J707385P184	RES MFILM 180K OHM 0,125W	1
R815	J707385P823	RES MFILM 82K OHM 0,125W	1
R816	J707385P124	RES MFILM 120K OHM 0,125W	1
R817	J707385P683	RES MFILM 68K OHM 0,125W	1
R818	J707476P58	RES DEPOS 560K OHM 0,1W	1
R819	J707385P224	RES MFILM 220K OHM 0,125W	1
R820	J707385P154	RES MFILM 150K OHM 0,125W	1
R821	J707478P12	RES VAR 22K OHM 0,05W	1
R822	J707385P103	RES MFILM 10K OHM 0,125W	1
R824	J707478P6	RES VAR 2,2K OHM 0,05W	1
R825	J707385P220	RES MFILM 22 OHM 0,125W	1
R901	J707385P102	RES MFILM 1K OHM 0,125W	1
R902	J707385P473	RES MFILM 47K OHM 0,125W	1
R903	J707385P223	RES MFILM 22K OHM 0,125W	1
R904	J707385P104	RES MFILM 100K OHM 0,125W	1
R905	J707385P334	RES MFILM 330K OHM 0,125W	1
R906	J707476P51	RES DEPOS 150K OHM	1
R907	J707385P473	RES MFILM 47K OHM 0,125W	1
R908	J707385P222	RES MFILM 2,2K OHM 0,125W	1
R909	J707385P104	RES MFILM 100K OHM 0,125W	1
R910	J707385P104	RES MFILM 100K OHM 0,125W	1
R911	J707385P103	RES MFILM 10K OHM 0,125W	1
R912	J707385P101	RES MFILM 100 OHM 0,125W	1
R913	J707385P103	RES MFILM 10K OHM 0,125W	1
R914	J707385P271	RES MFILM 270 OHM 0,125W	1
R915	J707385P104	RES MFILM 100K OHM 0,125W	1
R916	J707385P104	RES MFILM 100K OHM 0,125W	1
R917	J707385P104	RES MFILM 100K OHM 0,125W	1
R918	J707385P104	RES MFILM 100K OHM 0,125W	1
R919	J707385P473	RES MFILM 47K OHM 0,125W	1
R920	J707385P473	RES MFILM 47K OHM 0,125W	1
R921	J707385P473	RES MFILM 47K OHM 0,125W	1
R922	J707385P224	RES MFILM 220K OHM 0,125W	1
R923	J707385P104	RES MFILM 100K OHM 0,125W	1
R924	J707385P184	RES MFILM 180K OHM 0,125W	1

CIRCUIT POSITION	COMPONENT ITEM NUMBER	COMPONENT DESCRIPTION	QUANTITY TOTAL
R925	J707385P123	RES MFILM 12K OHM 0,125W	1
R926	J707385P224	RES MFILM 220K OHM 0,125W	1
R927	J707385P224	RES MFILM 220K OHM 0,125W	1
R928	J707385P223	RES MFILM 22K OHM 0,125W	1
R929	J707385P223	RES MFILM 22K OHM 0,125W	1
R930	J707385P223	RES MFILM 22K OHM 0,125W	1
R931	J707385P102	RES MFILM 1K OHM 0,125W	1
R932	J707385P103	RES MFILM 10K OHM 0,125W	1
R933	J707385P473	RES MFILM 47K OHM 0,125W	1
R934	J707385P223	RES MFILM 22K OHM 0,125W	1
R936	J707385P271	RES MFILM 270 OHM 0,125W	1
R937	J707385P104	RES MFILM 100K OHM 0,125W	1
R938	J707385P334	RES MFILM 330K OHM 0,125W	1
R939	J707385P103	RES MFILM 10K OHM 0,125W	1
R940	J707385P104	RES MFILM 100K OHM 0,125W	1
R941	J707385P682	RES MFILM 6,8K OHM 0,125W	1
R942	J707385P473	RES MFILM 47K OHM 0,125W	1
S901	J707133P3	SW	1
U701	J707451P1	INT CKT TBA 820M	1
U702	J707434P1	INT CKT 4051/SO16	1
U801	J707450P1	INT CKT LM358	1
U901	J707243P1	INT CKT 4094/SO16	1
U902	J707243P1	INT CKT 4094/SO16	1
U903	J707322P1	INT CKT 14569	1
U904	J707242P2	INT CKT 4013/SO14	1
U905	J708019P1	INT CKT COP324C	1
U907	J707242P1	INT CKT 4013/SO14	1
U908	J707464P1	INT CKT 4070/SO14	1
U909	J707264P1	INT CKT 4543/SO16	1
U910	J707264P1	INT CKT 4543/SO16	1
U911	J707464P1	INT CKT 4070/SO14	1
U912	J707264P1	INT CKT 4543/SO16	1
W904	A700134P9	WIRE JUMPER	1
X901	J706356P4	SOC 16 PIN	1
X902	J706331P7	SOC 28 PIN	1

ITEM NUMBER	DESCRIPTION
K805449G1	CL 4002 -10CH- , F. VHF 4M + 2M
K805449G2	CL 4002 -10CH- , F. UHF 0.7M
M905679G1	ASM - CL4002 CPNT BD., F. VHF 4M + 2M
M905679G2	ASM - CL4002 CPNT BD., F. UHF 0.7M

P A R T S L I S T :

CIRCUIT POSITION	COMPONENT ITEM NUMBER	COMPONENT DESCRIPTION	QUANTITY TOTAL
		DISPLAY AND DISPLAY MECHANICS:	
H901	J707230P1	DIS LT	1
H902	J706022P1	DIO LT HP 5082-4190	1
H903	J706022P1	DIO LT HP 5082-4190	1
H904	J706022P1	DIO LT HP 5082-4190	1
H905	J706022P1	DIO LT HP 5082-4190	1
0003	L855331P1	HSG DIS	1
0004	L855332P1	COV DIS	1
0005	K805332G1	DIS LT ASM	1
0006	J707458P1	CONT STR SIL	1
	J707469P1	LEAD FRAME	3
	L855333P1	PLT,ACRYLIC	1
		COMPONENT BOARD CL4002:	
C701	J707412P10	CAP POL 0,15MF 63V	1
C702	J707444P17	CAP TA 47MF 10V	1
C703	J707444P17	CAP TA 47MF 10V	1
C704	J707438P5	CAP CER 1NF 50V	1
C705	J707412P10	CAP POL 0,15MF 63V	1
C706	J707353P9	CAP ELEC 47MF 16V	1
C707	J707412P10	CAP POL 0,15MF 63V	1
C708	J707444P8	CAP TA 22MF 16V	1
C709	J707412P3	CAP POL 10NF 63V	1
C710	J707412P3	CAP POL 10NF 63V	1
C801	J707412P3	CAP POL 10NF 63V	1
C802	J707436P73	CAP CER 330PF 50V	1
C803	J707436P73	CAP CER 330PF 50V	1
C804	J707444P8	CAP TA 22MF 16V	1
C805	J707444P3	CAP TA 0,47MF 35V	1
C806	J707438P26	CAP CER 100NF 50V	1
C807	J707353P4	CAP ELEC 1MF 50V	1
C808	J707436P93	CAP CER 2,2NF 50V	1
C809	J707436P93	CAP CER 2,2NF 50V	1
C810	J707436P61	CAP CER 100PF 50V	1
C811	J707412P5	CAP POL 0,022MF 63V	1
C812	J707353P7	CAP ELEC 10MF 16V	1
C813	J707438P22	CAP CER 47NF 50V	1
C814	J707436P73	CAP CER 330PF 50V	1
C815	J707436P61	CAP CER 100PF 50V	1
C816	J707436P61	CAP CER 100PF 50V	1
C817	J707436P61	CAP CER 100PF 50V	1

CIRCUIT POSITION	COMPONENT ITEM NUMBER	COMPONENT DESCRIPTION	QUANTITY TOTAL
C818	J707436P61	CAP CER 100PF 50V	1
C819	J707412P3	CAP POL 10NF 63V	1
C820	J707412P1	CAP POL 4,7NF 63V	1
C821	J707436P73	CAP CER 330PF 50V	1
C822	J707436P87	CAP CER 1,2NF 50V	1
C823	J707436P61	CAP CER 100PF 50V	1
C901	J707353P7	CAP ELEC 10MF 16V	1
C902	J707438P14	CAP CER 10NF 50V	1
C903	J707436P61	CAP CER 100PF 50V	1
C904	J707438P22	CAP CER 47NF 50V	1
C905	J707438P14	CAP CER 10NF 50V	1
C906	J707436P93	CAP CER 2,2NF 50V	1
C907	J707438P22	CAP CER 47NF 50V	1
C908	J707438P22	CAP CER 47NF 50V	1
C909	J707438P14	CAP CER 10NF 50V	1
C910	J707353P7	CAP ELEC 10MF 16V	1
C911	J707438P22	CAP CER 47NF 50V	1
C912	J707438P3	CAP CER 470PF 50V	1
C913	J707436P25	CAP CER 18PF 50V	1
D801	J707390P1	DIO SIG SI BAV 74	1
D901	J707390P1	DIO SIG SI BAV 74	1
D904	J707390P1	DIO SIG SI BAV 74	1
D905	J707390P1	DIO SIG SI BAV 74	1
D906	J707390P1	DIO SIG SI BAV 74	1
D907	J707390P1	DIO SIG SI BAV 74	1
F901	J707468P11	FUSE 5A	1
J901	J706434P2	CONN BOTTOM ENTRY	4
J902	J706434P2	CONN BOTTOM ENTRY	6
J903	J706434P2	CONN BOTTOM ENTRY	13
J904	J707442P2	CONN 10-POS FEMALE	1
J905	J707442P3	CONN 17-POS FEMALE	1
J906	J706434P2	CONN BUTTOM ENTRY	18
J907	J707442P1	CONN 4-POS FEMALE	1
Q701	J707432P1	TSTR PNP SI BCX18	1
Q702	J707386P1	TSTR NPN SI BCW 32	1
Q703	J707386P1	TSTR NPN SI BCW 32	1
Q801	J707387P1	TSTR PNP SI BCW 30	1
Q802	J707386P1	TSTR NPN SI BCW 32	1
Q803	J707386P1	TSTR NPN SI BCW 32	1
Q804	J707387P1	TSTR PNP SI BCW 30	1
Q901	J707432P1	TSTR PNP SI BCX18	1
Q902	J707387P1	TSTR PNP SI BCW 30	1
Q903	J707429P1	TSTR BCX 20	1
Q904	J707386P1	TSTR NPN SI BCW 32	1
Q905	J707387P1	TSTR PNP SI BCW 30	1
Q906	J707386P1	TSTR NPN SI BCW 32	1
Q907	J707386P1	TSTR NPN SI BCW 32	1
R701	J707385P910	RES MFILM 1 OHM 0,125W	1
R702	J707385P103	RES MFILM 10K OHM 0,125W	1
R703	J707385P471	RES MFILM 470 OHM 0,125W	1
R704	J707385P104	RES MFILM 100K OHM 0,125W	1

CIRCUIT POSITION	COMPONENT ITEM NUMBER	COMPONENT DESCRIPTION	QUANTITY TOTAL
R705	J707385P273	RES MFILM 27K OHM 0,125W	1
R706	J707385P470	RES MFILM 47 OHM 0,125W	1
R707	J707385P223	RES MFILM 22K OHM 0,125W	1
R708	J707385P182	RES MFILM 1,8K OHM 0,125W	1
R709	J707385P122	RES MFILM 1,2K OHM 0,125W	1
R710	J707385P681	RES MFILM 680 OHM 0,125W	1
R711	J707385P391	RES MFILM 390 OHM 0,125W	1
R712	J707385P181	RES MFILM 180 OHM 0,125W	1
R713	J707385P121	RES MFILM 120 OHM 0,125W	1
R714	J707385P680	RES MFILM 68 OHM 0,125W	1
R715	J707385P820	RES MFILM 82 OHM 0,125W	1
R716	J707385P103	RES MFILM 10K OHM 0,125W	1
R717	J707385P222	RES MFILM 2,2K OHM 0,125W	1
R801	J707385P223	RES MFILM 22K OHM 0,125W	1
R802	J707385P222	RES MFILM 2,2K OHM 0,125W	1
R803	J707385P103	RES MFILM 10K OHM 0,125W	1
R804	J707385P474	RES MFILM 470K OHM 0,125W	1
R805	J707385P222	RES MFILM 2,2K OHM 0,125W	1
R806	J707385P223	RES MFILM 22K OHM 0,125W	1
R807	J707385P563	RES MFILM 56K OHM 0,125W	1
R808	J707385P472	RES MFILM 4,7K OHM 0,125W	1
R809	J707385P562	RES MFILM 5,6K OHM 0,125W	1
R810	J707385P392	RES MFILM 3,9K OHM 0,125W	1
R811	J707385P123	RES MFILM 12K OHM 0,125W	1
R812	J707478P8	RES VAR 4,7K OHM 0,05W	1
R813	J707385P123	RES MFILM 12K OHM 0,125W	1
R814	J707385P184	RES MFILM 180K OHM 0,125W	1
R815	J707385P823	RES MFILM 82K OHM 0,125W	1
R816	J707385P124	RES MFILM 120K OHM 0,125W	1
R817	J707385P683	RES MFILM 68K OHM 0,125W	1
R818	J707476P58	RES DEPOS 560K OHM 0,1W	1
R819	J707385P224	RES MFILM 220K OHM 0,125W	1
R820	J707385P154	RES MFILM 150K OHM 0,125W	1
R821	J707478P12	RES VAR 22K OHM 0,05W	1
R822	J707385P103	RES MFILM 10K OHM 0,125W	1
R824	J707478P6	RES VAR 2,2K OHM 0,05W	1
R825	J707385P220	RES MFILM 22 0HM 0,125W	1
R901	J707385P102	RES MFILM 1K OHM 0,125W	1
R902	J707385P473	RES MFILM 47K OHM 0,125W	1
R903	J707385P223	RES MFILM 22K OHM 0,125W	1
R904	J707385P104	RES MFILM 100K OHM 0,125W	1
R905	J707385P334	RES MFILM 330K 0HM 0,125W	1
R906	J707476P51	RES DEPOS 150K OHM	1
R907	J707385P473	RES MFILM 47K OHM 0,125W	1
R908	J707385P222	RES MFILM 2,2K OHM 0,125W	1
R909	J707385P104	RES MFILM 100K OHM 0,125W	1
R910	J707385P104	RES MFILM 100K OHM 0,125W	1
R911	J707385P103	RES MFILM 10K OHM 0,125W	1
R912	J707385P101	RES MFILM 100 OHM 0,125W	1
R913	J707385P103	RES MFILM 10K OHM 0,125W	1
R914	J707385P271	RES MFILM 270 OHM 0,125W	1
R915	J707385P104	RES MFILM 100K OHM 0,125W	1
R916	J707385P104	RES MFILM 100K OHM 0,125W	1
R917	J707385P104	RES MFILM 100K OHM 0,125W	1
R918	J707385P104	RES MFILM 100K OHM 0,125W	1
R919	J707385P473	RES MFILM 47K OHM 0,125W	1

	CIRCUIT POSITION	COMPONENT ITEM NUMBER	COMPONENT DESCRIPTION	QUANTITY TOTAL
	R920	J707385P473	RES MFILM 47K OHM 0,125W	1
	R921	J707385P473	RES MFILM 47K OHM 0,125W	1
	R922	J707385P224	RES MFILM 220K OHM 0,125W	1
	R923	J707385P104	RES MFILM 100K OHM 0,125W	1
	R924	J707385P184	RES MFILM 180K OHM 0,125W	1
	R925	J707385P123	RES MFILM 12K OHM 0,125W	1
	R926	J707385P224	RES MFILM 220K OHM 0,125W	1
	R927	J707385P224	RES MFILM 220K OHM 0,125W	1
	R928	J707385P223	RES MFILM 22K OHM 0,125W	1
	R929	J707385P223	RES MFILM 22K OHM 0,125W	1
	R930	J707385P223	RES MFILM 22K OHM 0,125W	1
	R931	J707385P102	RES MFILM 1K OHM 0,125W	1
	R932	J707385P103	RES MFILM 10K OHM 0,125W	1
	R933	J707385P473	RES MFILM 47K OHM 0,125W	1
	R934	J707385P223	RES MFILM 22K OHM 0,125W	1
	R936	J707385P271	RES MFILM 270 OHM 0,125W	1
	R937	J707385P104	RES MFILM 100K OHM 0,125W	1
	R938	J707385P334	RES MFILM 330K 0HM 0,125W	1
	R939	J707385P103	RES MFILM 10K OHM 0,125W	1
	R940	J707385P104	RES MFILM 100K OHM 0,125W	1
	R941	J707385P682	RES MFILM 6,8K OHM 0,125W	1
	R942	J707385P473	RES MFILM 47K OHM 0,125W	1
	S901	J707133P3	SWITCH	1
	U701	J707451P1	INT CKT TBA 820M	1
	U702	J707434P1	INT CKT 4051/S016	1
	U801	J707450P1	INT CKT LM358	1
	U901	J707243P1	INT CKT 4094/S016	1
	U902	J707243P1	INT CKT 4094/S016	1
	U903	J707322P1	INT CKT 14569	1
	U904	J707242P2	INT CKT 4013/S014	1
	U905	J708019P1	INT CKT, U-CTL. COP324C, PRGMD. NOTE: "FOR CQP433X + CQP411X"	1
*	U905	M905852G1	INT CKT, U-CTL. COP324C, PRGMD. NOTE: "FOR CQP 466X ONLY"	1
*	U906	J707417P1	INT CKT PROM 256 X 4	(1)
	U907	J707242P1	INT CKT 4013/S014	1
	U908	J707464P1	INT CKT 4070/S014	1
	U909	J707264P1	INT CKT 4543/S016	1
	U910	J707264P1	INT CKT 4543/S016	1
	U911	J707464P1	INT CKT 4070/S014	1
	U912	J707264P1	INT CKT 4543/SO16	1
	W904	A700134P9	WIRE JUMPER	1
	X901	J706356P4	SOC 16 PIN	1
	X902	J706331P7	SOC 28 PIN	1

Storno

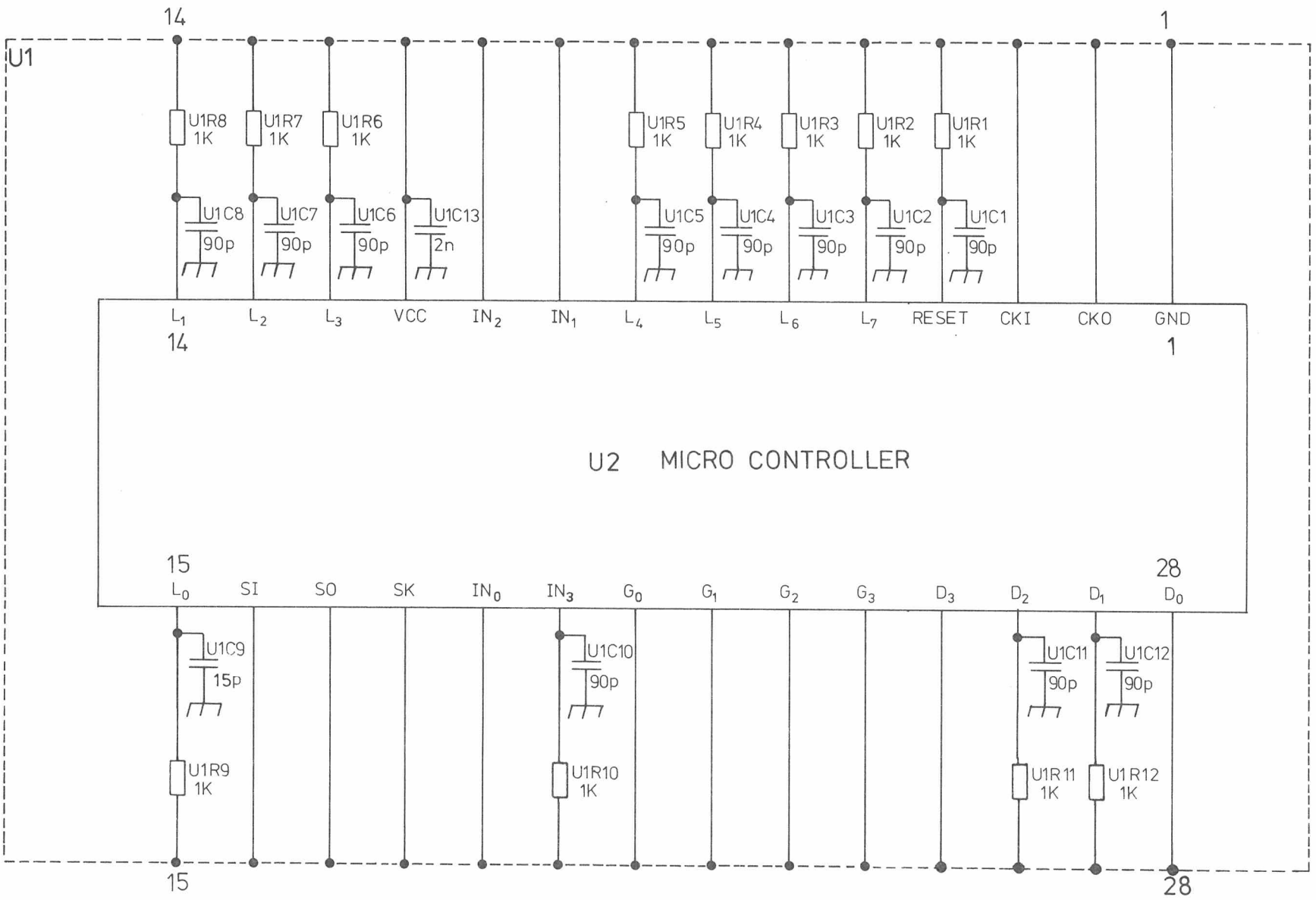

CL4001: CODE NO. M905852G2

CL4002: CODE NO. M905852G1

WHEN USED IN CQP4660

U905 FOR CL4001/CL4002

D403. 758

Storno

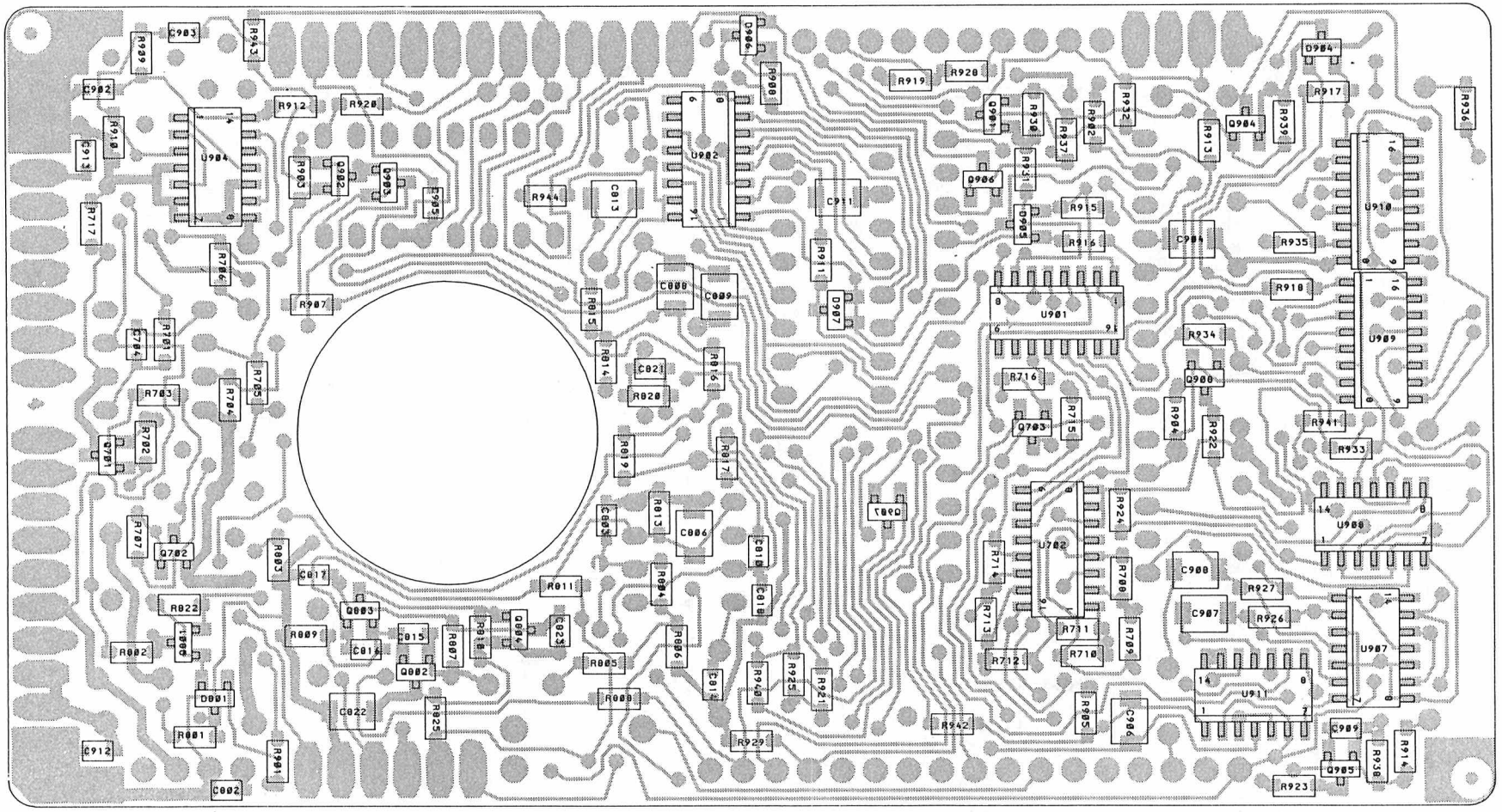

CODE NO. FOR MOUNTED BOARD

M905465G2-VHF/UHF

(M905465G1-VHF)

CONTROL LOGIC CL4001

COMPONENT LAYOUT

CHIP SIDE

D403.761/2

Storno

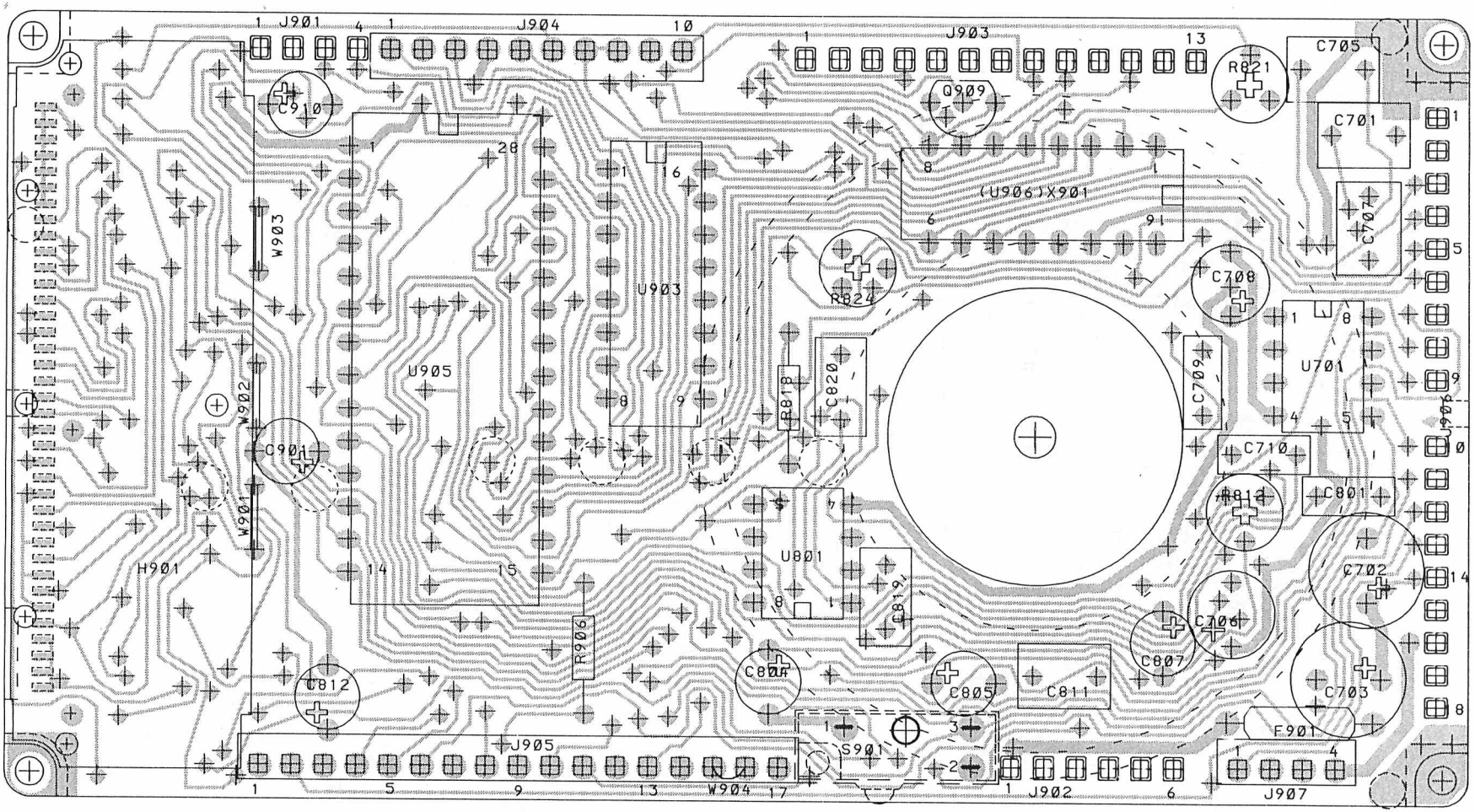

CODE NO. FOR MOUNTED BOARD

M905465G2-VHF/UHF

(M905465G1-VHF)

CONTROL LOGIC CL4001

COMPONENT LAYOUT

D403.760/2

Storno

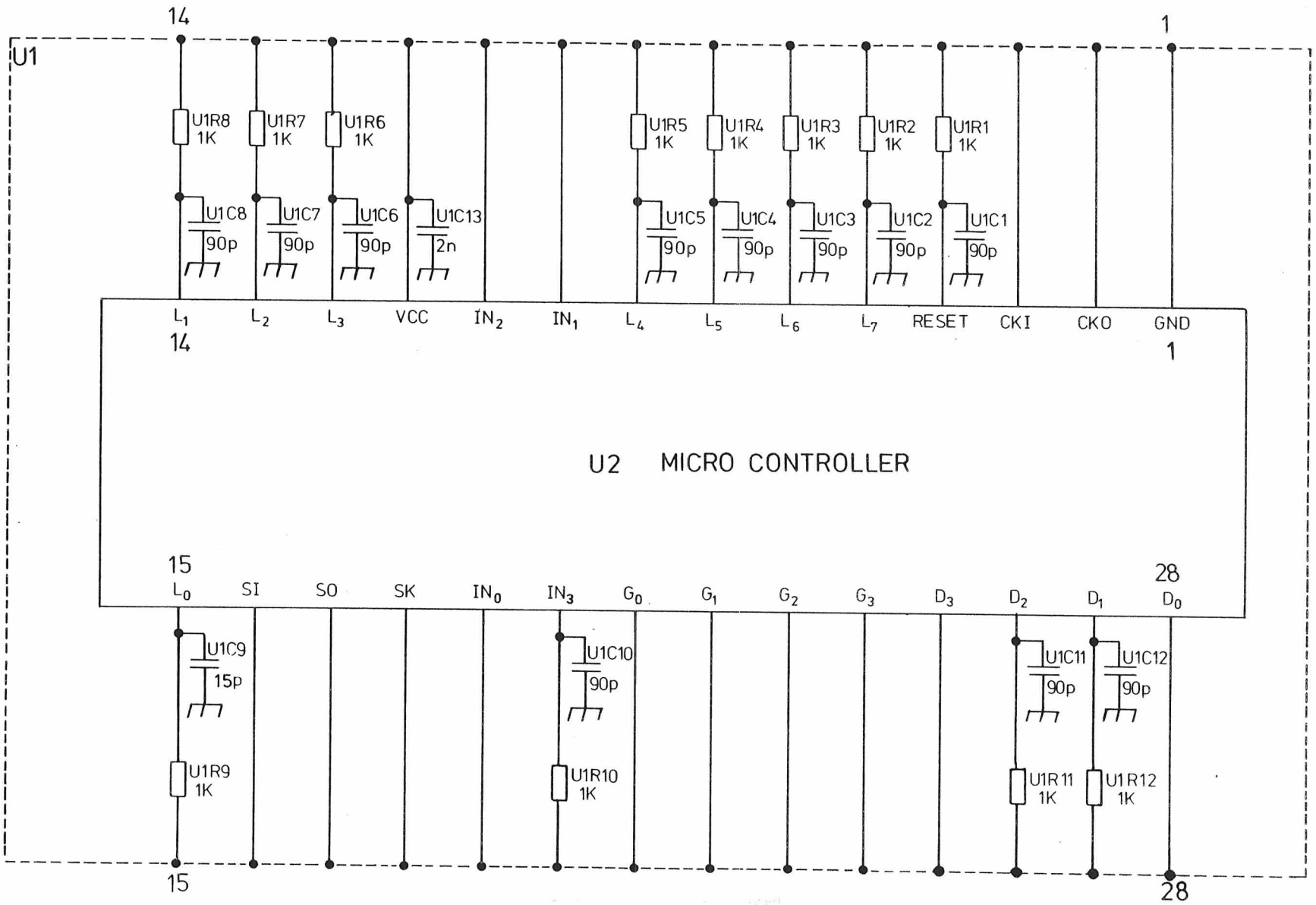

CL4001: CODE NO. M905852G2

CL4002: CODE NO. M905852G1

WHEN USED IN CQP4660

U905 FOR CL4001/CL4002

D403. 758

Storno

Storno

OUTPUT EXPANDER

VAR. DIV.

J901
5,5V CONT
TRANSM
SQUELCH
LINE
RF BOARD

J907
LS/MIC

J905B
PTT
T DET(SI)
5,5V CONT
SK
ENCODE
LINE
FILT LINE
SEQ
VCC/2

J904
G DET
TRANSM
CG
GADJ
SAMPLE
SQ
5,5V TX
GND
TONE OPTION

J902
RX/TX
5,5V CONT
5,5V TX
MOD LO
MOD HI
7,2V BATT
RF-BOARD

AUDIO AMPLIFIER

VOLUME CONTROL

NOTE
CUT TO DISABLE
ATTENTIONTONE

ATT. TONE GEN.

GROUP TONE FRQ

LCD CLOCK-GENERATOR

CG DEV.

NOTE CUT FOR 12,5 kHz AND SWEDEN

MAX. DEV.

TX AUDIO PROCESSOR

U905 MICROCONTROLLER
NOTE 1

P PROM

XU906

H 901

PTT
S901

J903
CLOCK
A2
A1
A0
LOCK
STROBE
FS ON
D0
D1
D2
D3
ON/OFF
GND
RF BOARD

J905A
DOX
D1
D2
D3
B
A
C(GND)
KEY PAD

J906
ENCODE
A
B
D3
D2
D1
DOX
SQ CANNEL
7,2V BATT
INT LS
TONE DISAB
PTT
MIC HI
LS
LINE
GND
BATTERY/TEST

NOTE 1:
ON G2 THE MICROCONTROLLER IS MOUNTED ON THICK FILM SUBSTRATE.

CODE NO. FOR MODULE
K805449G2-VHF/UHF
(K855449G1-VHF)

CONTROL LOGIC CL4002

REV.C | D403.823/3

Storno

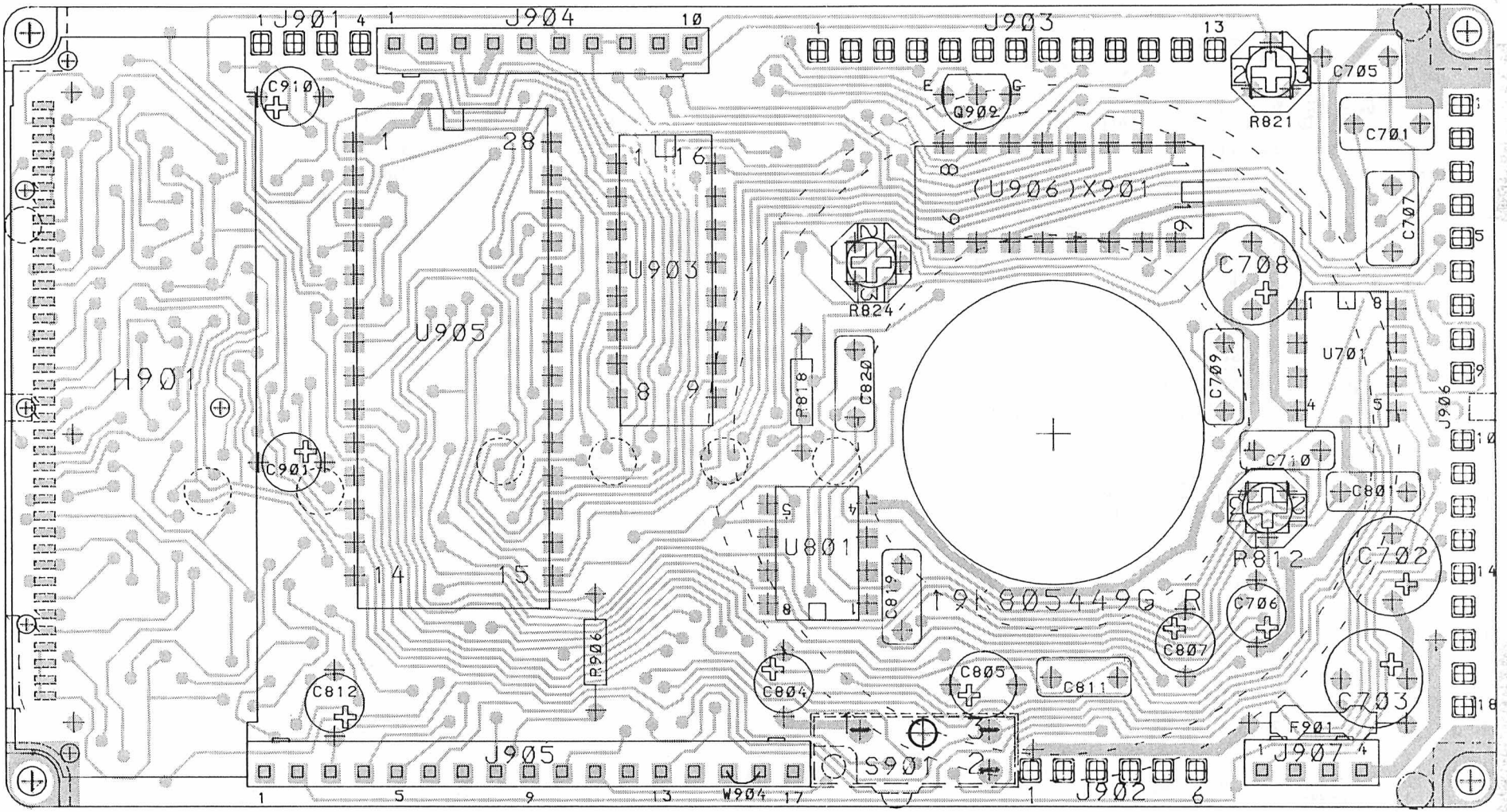

CODE NO. FOR MOUNTED BOARD

M905679G2-VHF/UHF

(M905679G1-VHF)

COMPONENT BOARD FOR CONTROL LOGIC CL4002
COMPONENT LAYOUT - COMPONENT SIDE

D403.824/3

Storno

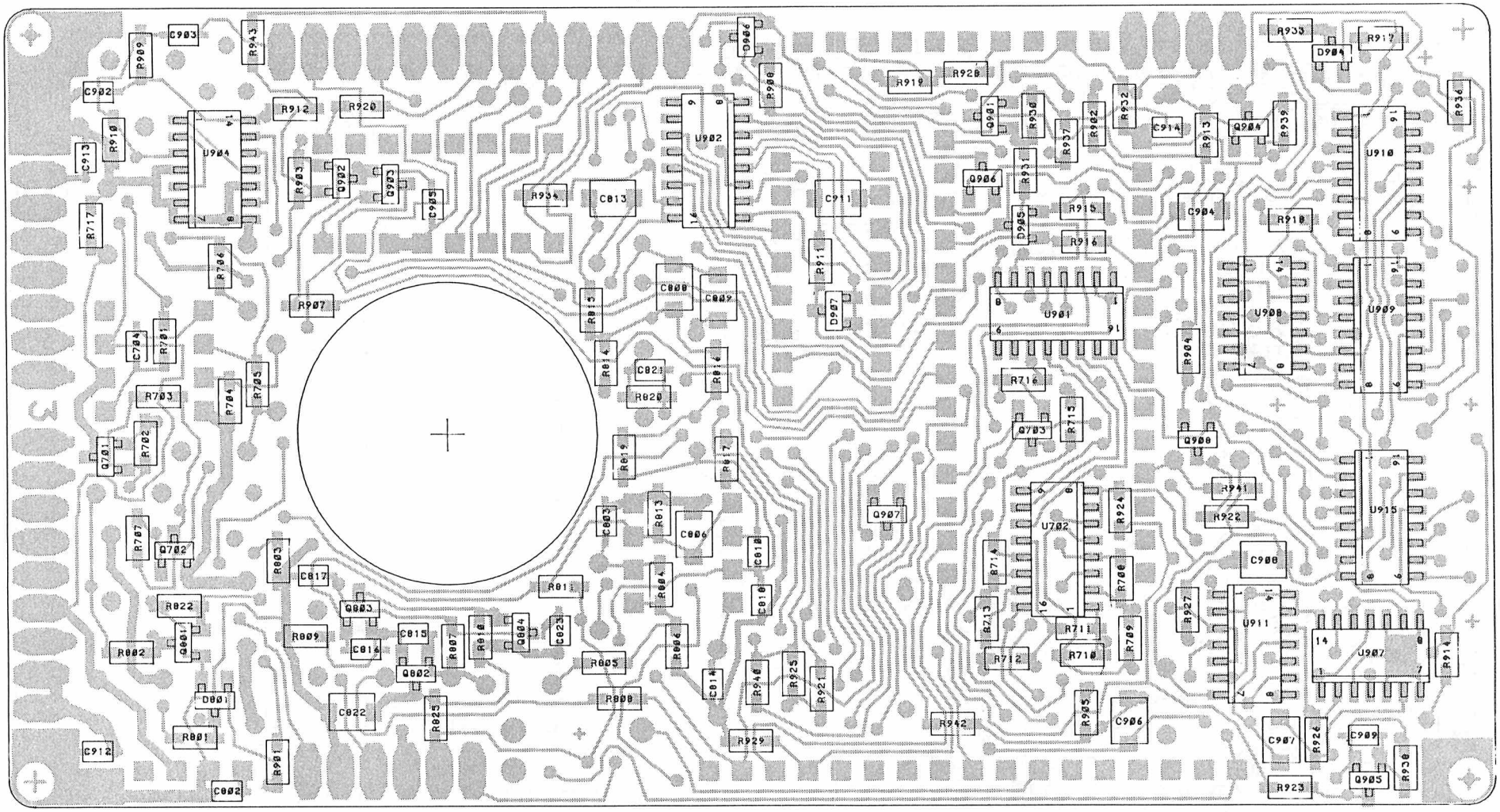

CODE NO. FOR MOUNTED BOARD

M905679G2-VHF/UHF

(M905679G1-VHF)

COMPONENT BOARD FOR CONTROL LOGIC CL4002
COMPONENT LAYOUT - CHIP SIDE

D403.825/3

ITEM NUMBER	DESCRIPTION
K805449G1	CL 4002 -10CH- , F. VHF 4M + 2M
K805449G2	CL 4002 -10CH- , F. UHF 0.7M
M905679G1	ASM - CL4002 CPNT BD., F. VHF 4M + 2M
M905679G2	ASM - CL4002 CPNT BD., F. UHF 0.7M

P A R T S L I S T :

CIRCUIT POSITION	COMPONENT ITEM NUMBER	COMPONENT DESCRIPTION	QUANTITY TOTAL
		DISPLAY AND DISPLAY MECHANICS:	
H901	J707230P1	DIS LT	1
H902	J706022P1	DIO LT HP 5082-4190	1
H903	J706022P1	DIO LT HP 5082-4190	1
H904	J706022P1	DIO LT HP 5082-4190	1
H905	J706022P1	DIO LT HP 5082-4190	1
0003	L855331P1	HSG DIS	1
0004	L855332P1	COV DIS	1
0005	K805332G1	DIS LT ASM	1
0006	J707458P1	CONT STR SIL	1
	J707469P1	LEAD FRAME	3
	L855333P1	PLT,ACRYLIC	1
		COMPONENT BOARD CL4002:	
C701	J707412P10	CAP POL 0,15MF 63V	1
C702	J707444P17	CAP TA 47MF 10V	1
C703	J707444P17	CAP TA 47MF 10V	1
C704	J707438P5	CAP CER 1NF 50V	1
C705	J707412P10	CAP POL 0,15MF 63V	1
C706	J707353P9	CAP ELEC 47MF 16V	1
C707	J707412P10	CAP POL 0,15MF 63V	1
C708	J707444P8	CAP TA 22MF 16V	1
C709	J707412P3	CAP POL 10NF 63V	1
C710	J707412P3	CAP POL 10NF 63V	1
C801	J707412P3	CAP POL 10NF 63V	1
C802	J707436P73	CAP CER 330PF 50V	1
C803	J707436P73	CAP CER 330PF 50V	1
C804	J707444P8	CAP TA 22MF 16V	1
C805	J707444P3	CAP TA 0,47MF 35V	1
C806	J707438P26	CAP CER 100NF 50V	1
C807	J707353P4	CAP ELEC 1MF 50V	1
C808	J707436P93	CAP CER 2,2NF 50V	1
C809	J707436P93	CAP CER 2,2NF 50V	1
C810	J707436P61	CAP CER 100PF 50V	1
C811	J707412P5	CAP POL 0,022MF 63V	1
C812	J707353P7	CAP ELEC 10MF 16V	1
C813	J707438P22	CAP CER 47NF 50V	1
C814	J707436P73	CAP CER 330PF 50V	1
C815	J707436P61	CAP CER 100PF 50V	1
C816	J707436P61	CAP CER 100PF 50V	1
C817	J707436P61	CAP CER 100PF 50V	1

CIRCUIT POSITION	COMPONENT ITEM NUMBER	COMPONENT DESCRIPTION	QUANTITY TOTAL
C818	J707436P61	CAP CER 100PF 50V	1
C819	J707412P3	CAP POL 10NF 63V	1
C820	J707412P1	CAP POL 4,7NF 63V	1
C821	J707436P73	CAP CER 330PF 50V	1
C822	J707436P87	CAP CER 1,2NF 50V	1
C823	J707436P61	CAP CER 100PF 50V	1
C901	J707353P4 *	CAP ELEC 1U0F 20% 50V *	1
C902	J707438P14	CAP CER 10NF 50V	1
C903	J707436P61	CAP CER 100PF 50V	1
C904	J707438P22	CAP CER 47NF 50V	1
C905	J707438P14	CAP CER 10NF 50V	1
C906	J707436P93	CAP CER 2,2NF 50V	1
C907	J707438P22	CAP CER 47NF 50V	1
C908	J707438P22	CAP CER 47NF 50V	1
C909	J707438P14	CAP CER 10NF 50V	1
C910	J707353P7	CAP ELEC 10MF 16V	1
C911	J707438P22	CAP CER 47NF 50V	1
C912	J707438P3	CAP CER 470PF 50V	1
C913	J707436P25	CAP CER 18PF 50V	1
D801	J707390P1	DIO SIG SI BAV 74	1
* *	*	*	*
D904	J707390P1	DIO SIG SI BAV 74	1
D905	J707390P1	DIO SIG SI BAV 74	1
D906	J707390P1	DIO SIG SI BAV 74	1
D907	J707390P1	DIO SIG SI BAV 74	1
F901	J707468P11	FUSE 5A	1
J901	J706434P2	CONN BOTTOM ENTRY	4
J902	J706434P2	CONN BOTTOM ENTRY	6
J903	J706434P2	CONN BOTTOM ENTRY	13
J904	J707442P2	CONN 10-POS FEMALE	1
J905	J707442P3	CONN 17-POS FEMALE	1
J906	J706434P2	CONN BUTTOM ENTRY	18
J907	J707442P1	CONN 4-P0S FEMALE	1
Q701	J707432P1	TSTR PNP SI BCX18	1
Q702	J707386P1	TSTR NPN SI BCW 32	1
Q703	J707386P1	TSTR NPN SI BCW 32	1
Q801	J707387P1	TSTR PNP SI BCW 30	1
Q802	J707386P1	TSTR NPN SI BCW 32	1
Q803	J707386P1	TSTR NPN SI BCW 32	1
Q804	J707387P1	TSTR PNP SI BCW 30	1
Q901	J707432P1	TSTR PNP SI BCX18	1
Q902	J707387P1	TSTR PNP SI BCW 30	1
Q903	J707429P1	TSTR BCX 20	1
Q904	J707386P1	TSTR NPN SI BCW 32	1
Q905	J707387P1	TSTR PNP SI BCW 30	1
Q906	J707386P1	TSTR NPN SI BCW 32	1
Q907	J707386P1	TSTR NPN SI BCW 32	1
* Q908	* J707386P1	* TSTR NPN SI BCW 32	* 1
* Q909	* J707674P1	* TSTR PNP SI BC 558A/B	* 1
R701	J707385P910	RES MFILM 1 OHM 0,125W	1
R702	J707385P103	RES MFILM 10K OHM 0,125W	1

CIRCUIT POSITION	COMPONENT ITEM NUMBER	COMPONENT DESCRIPTION	QUANTITY TOTAL
R703	J707385P471	RES MFILM 470 OHM 0,125W	1
R704	J707385P104	RES MFILM 100K OHM 0,125W	1
R705	J707385P273	RES MFILM 27K OHM 0,125W	1
R706	J707385P470	RES MFILM 47 OHM 0,125W	1
R707	J707385P223	RES MFILM 22K OHM 0,125W	1
R708	J707385P182	RES MFILM 1,8K OHM 0,125W	1
R709	J707385P122	RES MFILM 1,2K OHM 0,125W	1
R710	J707385P681	RES MFILM 680 OHM 0,125W	1
R711	J707385P391	RES MFILM 390 OHM 0,125W	1
R712	J707385P181	RES MFILM 180 OHM 0,125W	1
R713	J707385P121	RES MFILM 120 OHM 0,125W	1
R714	J707385P680	RES MFILM 68 OHM 0,125W	1
R715	J707385P820	RES MFILM 82 OHM 0,125W	1
R716	J707385P103	RES MFILM 10K OHM 0,125W	1
R717	J707385P222	RES MFILM 2,2K OHM 0,125W	1
R801	J707385P223	RES MFILM 22K OHM 0,125W	1
R802	J707385P222	RES MFILM 2,2K OHM 0,125W	1
R803	J707385P103	RES MFILM 10K OHM 0,125W	1
R804	J707385P474	RES MFILM 470K OHM 0,125W	1
R805	J707385P222	RES MFILM 2,2K OHM 0,125W	1
R806	J707385P223	RES MFILM 22K OHM 0,125W	1
R807	J707385P563	RES MFILM 56K OHM 0,125W	1
R808	J707385P472	RES MFILM 4,7K OHM 0,125W	1
R809	J707385P562	RES MFILM 5,6K OHM 0,125W	1
R810	J707385P392	RES MFILM 3,9K OHM 0,125W	1
R811	J707385P123	RES MFILM 12K OHM 0,125W	1
R812	J707478P8	RES VAR 4,7K OHM 0,05W	1
R813	J707385P123	RES MFILM 12K OHM 0,125W	1
R814	J707385P184	RES MFILM 180K OHM 0,125W	1
R815	J707385P823	RES MFILM 82K OHM 0,125W	1
R816	J707385P124	RES MFILM 120K OHM 0,125W	1
R817	J707385P683	RES MFILM 68K OHM 0,125W	1
R818	J707476P58	RES DEPOS 560K OHM 0,1W	1
R819	J707385P224	RES MFILM 220K OHM 0,125W	1
R820	J707385P154	RES MFILM 150K OHM 0,125W	1
R821	J707478P12	RES VAR 22K OHM 0,05W	1
R822	J707385P103	RES MFILM 10K OHM 0,125W	1
R824	J707478P6	RES VAR 2,2K OHM 0,05W	1
R825	J707385P220	RES MFILM 22 0HM 0,125W	1
R901	J707385P102	RES MFILM 1K OHM 0,125W	1
R902	J707385P473	RES MFILM 47K OHM 0,125W	1
R903	J707385P223	RES MFILM 22K OHM 0,125W	1
R904	J707385P104	RES MFILM 100K OHM 0,125W	1
R905	J707385P334	RES MFILM 330K 0HM 0,125W	1
R906	J707476P51	RES DEPOS 150K OHM	1
R907	J707385P473	RES MFILM 47K OHM 0,125W	1
R908	J707385P222	RES MFILM 2,2K OHM 0,125W	1
R909	J707385P104	RES MFILM 100K OHM 0,125W	1
R910	J707385P104	RES MFILM 100K OHM 0,125W	1
R911	J707385P103	RES MFILM 10K OHM 0,125W	1
R912	J707385P101	RES MFILM 100 OHM 0,125W	1
R913	J707385P103	RES MFILM 10K OHM 0,125W	1
R914	J707385P271	RES MFILM 270 OHM 0,125W	1
R915	J707385P104	RES MFILM 100K OHM 0,125W	1
R916	J707385P104	RES MFILM 100K OHM 0,125W	1
R917	J707385P104	RES MFILM 100K OHM 0,125W	1

CIRCUIT POSITION	COMPONENT ITEM NUMBER	COMPONENT DESCRIPTION	QUANTITY TOTAL
R918	J707385P104	RES MFILM 100K OHM 0,125W	1
R919	J707385P473	RES MFILM 47K OHM 0,125W	1
R920	J707385P473	RES MFILM 47K OHM 0,125W	1
R921	J707385P473	RES MFILM 47K OHM 0,125W	1
R922	J707385P224	RES MFILM 220K OHM 0,125W	1
R923	J707385P104	RES MFILM 100K OHM 0,125W	1
R924	J707385P184	RES MFILM 180K OHM 0,125W	1
R925	J707385P123	RES MFILM 12K OHM 0,125W	1
R926	J707385P224	RES MFILM 220K OHM 0,125W	1
R927	J707385P224	RES MFILM 220K OHM 0,125W	1
R928	J707385P223	RES MFILM 22K OHM 0,125W	1
R929	J707385P223	RES MFILM 22K OHM 0,125W	1
R930	J707385P223	RES MFILM 22K OHM 0,125W	1
R931	J707385P102	RES MFILM 1K OHM 0,125W	1
R932	J707385P103	RES MFILM 10K OHM 0,125W	1
R933	J707385P473	RES MFILM 47K OHM 0,125W	1
R934	J707385P223	RES MFILM 22K OHM 0,125W	1
R936	J707385P271	RES MFILM 270 OHM 0,125W	1
R937	J707385P104	RES MFILM 100K OHM 0,125W	1
R938	J707385P334	RES MFILM 330K 0HM 0,125W	1
R939	J707385P103	RES MFILM 10K OHM 0,125W	1
R940	J707385P104	RES MFILM 100K OHM 0,125W	1
R941	J707385P103 *	RES MFILM 10K OHM 0,125W *	1
R942	J707385P473	RES MFILM 47K OHM 0,125W	1
* R943	* J707385P473	* RES MFILM 47K OHM 0,125W	* 1
S901	J707133P3	SWITCH	1
U701	J707451P1	INT CKT TBA 820M	1
U702	J707434P1	INT CKT 4051/S016	1
U801	J707450P1	INT CKT LM358	1
U901	J707243P1	INT CKT 4094/S016	1
U902	J707243P1	INT CKT 4094/S016	1
U903	J707322P1	INT CKT 14569	1
U904	J707242P2	INT CKT 4013/S014	1
U905	J708019P1	INT CKT, U-CTL. COP324C, PRGMD. NOTE: "FOR CQP433X + CQP411X"	1
* U905	M905852G1	INT CKT, U-CTL. COP324C, PRGMD. NOTE: "FOR CQP 466X ONLY"	1
* U906	J707417P1	INT CKT PROM 256 X 4	(1)
U907	J707242P1	INT CKT 4013/S014	1
U908	J707464P1	INT CKT 4070/S014	1
U909	J707264P1	INT CKT 4543/S016	1
U910	J707264P1	INT CKT 4543/S016	1
U911	J707464P1	INT CKT 4070/S014	1
U912	J707264P1	INT CKT 4543/SO16	1
W904	A700134P9	WIRE JUMPER	1
X901	J706356P4	SOC 16 PIN	1
*	*	*	*
	* J708413P1	* SLV SIL RUBB NAT	* 27MM

ITEM NUMBER	DESCRIPTION
K805449G1	CL 4002 -10CH- , F. VHF 4M + 2M
K805449G2	CL 4002 -10CH- , F. UHF 0.7M
M905679G1	ASM - CL4002 CPNT BD., F. VHF 4M + 2M
M905679G2	ASM - CL4002 CPNT BD., F. UHF 0.7M

P A R T S L I S T :

CIRCUIT POSITION	COMPONENT ITEM NUMBER	COMPONENT DESCRIPTION	QUANTITY
		DISPLAY AND DISPLAY MECHANICS:	
H901	J707230P1	DIS LT	1
H902	J706022P1	DIO LT HP 5082-4190	1
H903	J706022P1	DIO LT HP 5082-4190	1
H904	J706022P1	DIO LT HP 5082-4190	1
H905	J706022P1	DIO LT HP 5082-4190	1
0003	L855331P1	HSG DIS	1
0004	L855332P1	COV DIS	1
0005	K805332G1	DIS LT ASM	1
0006	J707458P1	CONT STR SIL	1
	J707469P1	LEAD FRAME	3
	L855333P1	PLT,ACRYLIC	1
		COMPONENT BOARD CL4002:	
C701	J707412P10	CAP POL 0,15MF 63V	1
C702	J707444P17	CAP TA 47MF 10V	1
C703	J707444P17	CAP TA 47MF 10V	1
C704	J707438P5	CAP CER 1NF 50V	1
C705	J707412P10	CAP POL 0,15MF 63V	1
C706	J707353P9	CAP ELEC 47MF 16V	1
C707	J707412P10	CAP POL 0,15MF 63V	1
C708	J707444P8	CAP TA 22MF 16V	1
C709	J707412P3	CAP POL 10NF 63V	1
C710	J707412P3	CAP POL 10NF 63V	1
C801	J707412P3	CAP POL 10NF 63V	1
C802	J707436P73	CAP CER 330PF 50V	1
C803	J707436P73	CAP CER 330PF 50V	1
C804	J707444P8	CAP TA 22MF 16V	1
C805	J707444P3	CAP TA 0,47MF 35V	1
C806	J707438P26	CAP CER 100NF 50V	1
C807	J707353P4	CAP ELEC 1MF 50V	1
C808	J707436P93	CAP CER 2,2NF 50V	1
C809	J707436P93	CAP CER 2,2NF 50V	1
C810	J707436P61	CAP CER 100PF 50V	1
C811	J707412P5	CAP POL 0,022MF 63V	1
C812	J707353P7	CAP ELEC 10MF 16V	1
C813	J707438P22	CAP CER 47NF 50V	1
C814	J707436P73	CAP CER 330PF 50V	1
C815	J707436P61	CAP CER 100PF 50V	1

	CIRCUIT POSITION	COMPONENT ITEM NUMBER	COMPONENT DESCRIPTION	QUANTITY
	C816	J707436P61	CAP CER 100PF 50V	1
	C817	J707436P61	CAP CER 100PF 50V	1
	C818	J707436P61	CAP CER 100PF 50V	1
	C819	J707412P3	CAP POL 10NF 63V	1
	C820	J707412P1	CAP POL 4,7NF 63V	1
	C821	J707436P73	CAP CER 330PF 50V	1
	C822	J707436P87	CAP CER 1,2NF 50V	1
	C823	J707436P61	CAP CER 100PF 50V	1
	C901	J707353P4	CAP ELEC 1U0F 20% 50V	1
	C902	J707438P14	CAP CER 10NF 50V	1
	C903	J707436P61	CAP CER 100PF 50V	1
	C904	J707438P22	CAP CER 47NF 50V	1
	C905	J707438P14	CAP CER 10NF 50V	1
	C906	J707436P93	CAP CER 2,2NF 50V	1
	C907	J707438P22	CAP CER 47NF 50V	1
	C908	J707438P22	CAP CER 47NF 50V	1
	C909	J707438P14	CAP CER 10NF 50V	1
	C910	J707353P7	CAP ELEC 10MF 16V	1
	C911	J707438P22	CAP CER 47NF 50V	1
	C912	J707438P3	CAP CER 470PF 50V	1
	C913	J707436P25	CAP CER 18PF 50V	1
*	C914	* J707438P14	* CAP CER 10NF 50V	* 1
	D801	J707390P1	DIO SIG SI BAV 74	1
	D904	J707390P1	DIO SIG SI BAV 74	1
	D905	J707390P1	DIO SIG SI BAV 74	1
	D906	J707390P1	DIO SIG SI BAV 74	1
	D907	J707390P1	DIO SIG SI BAV 74	1
	F901	J707468P11	FUSE 5A	1
	J901	J706434P2	CONN BOTTOM ENTRY	4
	J902	J706434P2	CONN BOTTOM ENTRY	6
	J903	J706434P2	CONN BOTTOM ENTRY	13
	J904	J707442P2	CONN 10-POS FEMALE	1
	J905	J707442P3	CONN 17-POS FEMALE	1
	J906	J706434P2	CONN BUTTOM ENTRY	18
	J907	J707442P1	CONN 4-P0S FEMALE	1
	Q701	J707432P1	TSTR PNP SI BCX18	1
	Q702	J707386P1	TSTR NPN SI BCW 32	1
	Q703	J707386P1	TSTR NPN SI BCW 32	1
	Q801	J707387P1	TSTR PNP SI BCW 30	1
	Q802	J707386P1	TSTR NPN SI BCW 32	1
	Q803	J707386P1	TSTR NPN SI BCW 32	1
	Q804	J707387P1	TSTR PNP SI BCW 30	1
	Q901	J707432P1	TSTR PNP SI BCX18	1
	Q902	J707387P1	TSTR PNP SI BCW 30	1
	Q903	J707429P1	TSTR BCX 20	1
	Q904	J707386P1	TSTR NPN SI BCW 32	1
	Q905	J707387P1	TSTR PNP SI BCW 30	1
	Q906	J707386P1	TSTR NPN SI BCW 32	1
	Q907	J707386P1	TSTR NPN SI BCW 32	1

CIRCUIT POSITION	COMPONENT ITEM NUMBER	COMPONENT DESCRIPTION	QUANTITY
Q908	J707386P1	TSTR NPN SI BCW 32	1
Q909	J707674P1	TSTR PNP SI BC 558A/B	1
R701	J707385P910	RES MFILM 1 OHM 0,125W	1
R702	J707385P103	RES MFILM 10K OHM 0,125W	1
R703	J707385P471	RES MFILM 470 OHM 0,125W	1
R704	J707385P104	RES MFILM 100K OHM 0,125W	1
R705	J707385P273	RES MFILM 27K OHM 0,125W	1
R706	J707385P470	RES MFILM 47 OHM 0,125W	1
R707	J707385P223	RES MFILM 22K OHM 0,125W	1
R708	J707385P182	RES MFILM 1,8K OHM 0,125W	1
R709	J707385P122	RES MFILM 1,2K OHM 0,125W	1
R710	J707385P681	RES MFILM 680 OHM 0,125W	1
R711	J707385P391	RES MFILM 390 OHM 0,125W	1
R712	J707385P181	RES MFILM 180 OHM 0,125W	1
R713	J707385P121	RES MFILM 120 OHM 0,125W	1
R714	J707385P680	RES MFILM 68 OHM 0,125W	1
R715	J707385P820	RES MFILM 82 OHM 0,125W	1
R716	J707385P103	RES MFILM 10K OHM 0,125W	1
R717	J707385P222	RES MFILM 2,2K OHM 0,125W	1
R801	J707385P223	RES MFILM 22K OHM 0,125W	1
R802	J707385P222	RES MFILM 2,2K OHM 0,125W	1
R803	J707385P103	RES MFILM 10K OHM 0,125W	1
R804	J707385P474	RES MFILM 470K OHM 0,125W	1
R805	J707385P222	RES MFILM 2,2K OHM 0,125W	1
R806	J707385P223	RES MFILM 22K OHM 0,125W	1
R807	J707385P563	RES MFILM 56K OHM 0,125W	1
R808	J707385P472	RES MFILM 4,7K OHM 0,125W	1
R809	J707385P562	RES MFILM 5,6K OHM 0,125W	1
R810	J707385P392	RES MFILM 3,9K OHM 0,125W	1
R811	J707385P123	RES MFILM 12K OHM 0,125W	1
R812	J707478P8	RES VAR 4,7K OHM 0,05W	1
R813	J707385P123	RES MFILM 12K OHM 0,125W	1
R814	J707385P184	RES MFILM 180K OHM 0,125W	1
R815	J707385P823	RES MFILM 82K OHM 0,125W	1
R816	J707385P124	RES MFILM 120K OHM 0,125W	1
R817	J707385P683	RES MFILM 68K OHM 0,125W	1
R818	J707476P58	RES DEPOS 560K OHM 0,1W	1
R819	J707385P224	RES MFILM 220K OHM 0,125W	1
R820	J707385P154	RES MFILM 150K OHM 0,125W	1
R821	J707478P12	RES VAR 22K OHM 0,05W	1
R822	J707385P103	RES MFILM 10K OHM 0,125W	1
R824	J707478P6	RES VAR 2,2K OHM 0,05W	1
R825	J707385P220	RES MFILM 22 0HM 0,125W	1
R901	J707385P102	RES MFILM 1K OHM 0,125W	1
R902	J707385P473	RES MFILM 47K OHM 0,125W	1
R903	J707385P223	RES MFILM 22K OHM 0,125W	1
R904	J707385P104	RES MFILM 100K OHM 0,125W	1
R905	J707385P334	RES MFILM 330K 0HM 0,125W	1
R906	J707476P51	RES DEPOS 150K OHM	1
R907	J707385P473	RES MFILM 47K OHM 0,125W	1
R908	J707385P222	RES MFILM 2,2K OHM 0,125W	1
R909	J707385P104	RES MFILM 100K OHM 0,125W	1
R910	J707385P104	RES MFILM 100K OHM 0,125W	1

CIRCUIT POSITION	COMPONENT ITEM NUMBER	COMPONENT DESCRIPTION	QUANTITY
R911	J707385P103	RES MFILM 10K OHM 0,125W	1
R912	J707385P101	RES MFILM 100 OHM 0,125W	1
R913	J707385P103	RES MFILM 10K OHM 0,125W	1
R914	J707385P271	RES MFILM 270 OHM 0,125W	1
R915	J707385P104	RES MFILM 100K OHM 0,125W	1
R916	J707385P104	RES MFILM 100K OHM 0,125W	1
R917	J707385P104	RES MFILM 100K OHM 0,125W	1
R918	J707385P104	RES MFILM 100K OHM 0,125W	1
R919	J707385P473	RES MFILM 47K OHM 0,125W	1
R920	J707385P473	RES MFILM 47K OHM 0,125W	1
R921	J707385P473	RES MFILM 47K OHM 0,125W	1
R922	J707385P224	RES MFILM 220K OHM 0,125W	1
R923	J707385P104	RES MFILM 100K OHM 0,125W	1
R924	J707385P184	RES MFILM 180K OHM 0,125W	1
R925	J707385P123	RES MFILM 12K OHM 0,125W	1
R926	J707385P224	RES MFILM 220K OHM 0,125W	1
R927	J707385P224	RES MFILM 220K OHM 0,125W	1
R928	J707385P223	RES MFILM 22K OHM 0,125W	1
R929	J707385P223	RES MFILM 22K OHM 0,125W	1
R930	J707385P223	RES MFILM 22K OHM 0,125W	1
R931	J707385P102	RES MFILM 1K OHM 0,125W	1
R932	J707385P103	RES MFILM 10K OHM 0,125W	1
R933	J707385P473	RES MFILM 47K OHM 0,125W	1
R934	J707385P223	RES MFILM 22K OHM 0,125W	1
R936	J707385P271	RES MFILM 270 OHM 0,125W	1
R937	J707385P104	RES MFILM 100K OHM 0,125W	1
R938	J707385P334	RES MFILM 330K 0HM 0,125W	1
R939	J707385P103	RES MFILM 10K OHM 0,125W	1
R940	J707385P104	RES MFILM 100K OHM 0,125W	1
R941	J707385P103	RES MFILM 10K OHM 0,125W	1
R942	J707385P473	RES MFILM 47K OHM 0,125W	1
R943	J707385P473	RES MFILM 47K OHM 0,125W	1
S901	J707133P3	SWITCH	1
U701	J707451P1	INT CKT TBA 820M	1
U702	J707434P1	INT CKT 4051/S016	1
U801	J707450P1	INT CKT LM358	1
U901	J707243P1	INT CKT 4094/S016	1
U902	J707243P1	INT CKT 4094/S016	1
U903	J707322P1	INT CKT 14569	1
U904	J707242P2	INT CKT 4013/S014	1
U905	J708336P1	IC , U-CTL. COP344C, PRGMD. NOTE: "FOR CQP433X + CQP411X"	1
U905	M905852G1	INT CKT WITH: IC , U-CTL. COP344C, PRGMD. NOTE: "FOR CQP 466X ONLY"	1
U906	J707417P1	INT CKT PROM 256 X 4	(1)
U907	J707242P1	INT CKT 4013/S014	1
U908	J707464P1	INT CKT 4070/S014	1

CIRCUIT POSITION	COMPONENT ITEM NUMBER	COMPONENT DESCRIPTION	QUANTITY
U909	J707264P1	INT CKT 4543/S016	1
U910	J707264P1	INT CKT 4543/S016	1
U911	J707464P1	INT CKT 4070/S014	1
U912	J707264P1	INT CKT 4543/SO16	1
W904	A700134P9	WIRE JUMPER	1
X901	J706356P4	SOC 16 PIN	1
* 0002	* M9-----P1R3	* BD PW., REVISION NO.: 3	* 1
0004	J708413P1	SLV SIL RUBB NAT	27MM

ITEM NUMBER	DESCRIPTION
*	*
K805449G2	CL 4002 -10CH-
*	*
M905679G2	ASM - CL4002 CPNT BD. F. 10 CHANN.

P A R T S L I S T :

CIRCUIT POSITION	COMPONENT ITEM NUMBER	COMPONENT DESCRIPTION	QUANTITY
		DISPLAY AND DISPLAY MECHANICS:	
H901	J707230P1	DIS LT	1
H902	J706022P1	DIO LT HP 5082-4190	1
H903	J706022P1	DIO LT HP 5082-4190	1
H904	J706022P1	DIO LT HP 5082-4190	1
H905	J706022P1	DIO LT HP 5082-4190	1
0003	L855331P1	HSG DIS	1
0004	L855332P1	COV DIS	1
0005	K805332G1	DIS LT ASM	1
0006	J707458P1	CONT STR SIL	1
	J707469P1	LEAD FRAME	3
	L855333P1	PLT,ACRYLIC	1
A001 :	M905679G2 :	COMPONENT BOARD CL 4002 :	
C701	J707412P10	CAP POL 0,15MF 63V	1
C702	J707444P17	CAP TA 47MF 10V	1
C703	J707444P17	CAP TA 47MF 10V	1
C704	J707438P5	CAP CER 1NF 50V	1
C705	J707412P10	CAP POL 0,15MF 63V	1
C706	J707353P9	CAP ELEC 47MF 16V	1
C707	J707412P10	CAP POL 0,15MF 63V	1
C708	J707444P8	CAP TA 22MF 16V	1
C709	J707412P3	CAP POL 10NF 63V	1
C710	J707412P3	CAP POL 10NF 63V	1
C801	J707412P3	CAP POL 10NF 63V	1
C802	J707436P73	CAP CER 330PF 50V	1
C803	J707436P73	CAP CER 330PF 50V	1
C804	J707444P8	CAP TA 22MF 16V	1
C805	J707444P3	CAP TA 0,47MF 35V	1
C806	J707438P26	CAP CER 100NF 50V	1
C807	J707353P4	CAP ELEC 1MF 50V	1
C808	J707436P93	CAP CER 2,2NF 50V	1
C809	J707436P93	CAP CER 2,2NF 50V.	1
C810	J707436P61	CAP CER 100PF 50V	1
C811	J707412P5	CAP POL 0,022MF 63V	1
C812	J707353P7	CAP ELEC 10MF 16V	1
C813	J707438P22	CAP CER 47NF 50V	1
C814	J707436P73	CAP CER 330PF 50V	1
C815	J707436P61	CAP CER 100PF 50V	1

CIRCUIT POSITION	COMPONENT ITEM NUMBER	COMPONENT DESCRIPTION	QUANTITY
C816	J707436P61	CAP CER 100PF 50V	1
C817	J707436P61	CAP CER 100PF 50V	1
C818	J707436P61	CAP CER 100PF 50V	1
C819	J707412P3	CAP POL 10NF 63V	1
C820	J707412P1	CAP POL 4,7NF 63V	1
C821	J707436P73	CAP CER 330PF 50V	1
C822	J707436P87	CAP CER 1,2NF 50V	1
C823	J707436P61	CAP CER 100PF 50V	1
C901	J707353P4	CAP ELEC 1U0F 20% 50V	1
C902	J707438P14	CAP CER 10NF 50V	1
C903	J707436P61	CAP CER 100PF 50V	1
C904	J707438P22	CAP CER 47NF 50V	1
C905	J707438P14	CAP CER 10NF 50V	1
C906	J707436P93	CAP CER 2,2NF 50V	1
C907	J707438P22	CAP CER 47NF 50V	1
C908	J707438P22	CAP CER 47NF 50V	1
C909	J707438P14	CAP CER 10NF 50V	1
C910	J707353P7	CAP ELEC 10MF 16V	1
C911	J707438P22	CAP CER 47NF 50V	1
C912	J707438P3	CAP CER 470PF 50V	1
C913	J707436P25	CAP CER 18PF 50V	1
C914	J707438P14	CAP CER 10NF 50V	1
D801	J707390P1	DIO SIG SI BAV 74	1
D904	J707390P1	DIO SIG SI BAV 74	1
D905	J707390P1	DIO SIG SI BAV 74	1
D906	J707390P1	DIO SIG SI BAV 74	1
D907	J707390P1	DIO SIG SI BAV 74	1
F901	J707468P11	FUSE 5A	1
J901	J706434P2	CONN BOTTOM ENTRY	4
J902	J706434P2	CONN BOTTOM ENTRY	6
J903	J706434P2	CONN BOTTOM ENTRY	13
J904	J707442P2	CONN 10-POS FEMALE	1
J905	J707442P3	CONN 17-POS FEMALE	1
J906	J706434P2	CONN BUTTOM ENTRY	18
J907	J707442P1	CONN 4-P0S FEMALE	1
Q701	J707432P1	TSTR PNP SI BCX18	1
Q702	J707386P1	TSTR NPN SI BCW 32	1
Q703	J707386P1	TSTR NPN SI BCW 32	1
Q801	J707387P1	TSTR PNP SI BCW 30	1
Q802	J707386P1	TSTR NPN SI BCW 32	1
Q803	J707386P1	TSTR NPN SI BCW 32	1
Q804	J707387P1	TSTR PNP SI BCW 30	1
Q901	J707432P1	TSTR PNP SI BCX18	1
Q902	J707387P1	TSTR PNP SI BCW 30	1
Q903	J707429P1	TSTR BCX 20	1
Q904	J707386P1	TSTR NPN SI BCW 32	1

CIRCUIT POSITION	COMPONENT ITEM NUMBER	COMPONENT DESCRIPTION	QUANTITY
Q905	J707387P1	TSTR PNP SI BCW 30	1
Q906	J707386P1	TSTR NPN SI BCW 32	1
Q907	J707386P1	TSTR NPN SI BCW 32	1
Q908	J707386P1	TSTR NPN SI BCW 32	1
Q909	J707674P1	TSTR PNP SI BC 558A/B	1
R701	J707385P910	RES MFILM 1 OHM 0,125W	1
R702	J707385P103	RES MFILM 10K OHM 0,125W	1
R703	J707385P471	RES MFILM 470 OHM 0,125W	1
R704	J707385P104	RES MFILM 100K OHM 0,125W	1
R705	J707385P273	RES MFILM 27K OHM 0,125W	1
R706	J707385P470	RES MFILM 47 OHM 0,125W	1
R707	J707385P223	RES MFILM 22K OHM 0,125W	1
R708	J707385P182	RES MFILM 1,8K OHM 0,125W	1
R709	J707385P122	RES MFILM 1,2K OHM 0,125W	1
R710	J707385P681	RES MFILM 680 OHM 0,125W	1
R711	J707385P391	RES MFILM 390 OHM 0,125W	1
R712	J707385P181	RES MFILM 180 OHM 0,125W	1
R713	J707385P121	RES MFILM 120 OHM 0,125W	1
R714	J707385P680	RES MFILM 68 OHM 0,125W	1
R715	J707385P820	RES MFILM 82 OHM 0,125W	1
R716	J707385P103	RES MFILM 10K OHM 0,125W	1
R717	J707385P222	RES MFILM 2,2K OHM 0,125W	1
R801	J707385P223	RES MFILM 22K OHM 0,125W	1
R802	J707385P222	RES MFILM 2,2K OHM 0,125W	1
R803	J707385P103	RES MFILM 10K OHM 0,125W	1
R804	J707385P474	RES MFILM 470K OHM 0,125W	1
R805	J707385P222	RES MFILM 2,2K OHM 0,125W	1
R806	J707385P223	RES MFILM 22K OHM 0,125W	1
R807	J707385P563	RES MFILM 56K OHM 0,125W	1
R808	J707385P472	RES MFILM 4,7K OHM 0,125W	1
R809	J707385P562	RES MFILM 5,6K OHM 0,125W	1
R810	J707385P392	RES MFILM 3,9K OHM 0,125W	1
R811	J707385P123	RES MFILM 12K OHM 0,125W	1
R812	J707478P8	RES VAR 4,7K OHM 0,05W	1
R813	J707385P123	RES MFILM 12K OHM 0,125W	1
R814	J707385P184	RES MFILM 180K OHM 0,125W	1
R815	J707385P823	RES MFILM 82K OHM 0,125W	1
R816	J707385P124	RES MFILM 120K OHM 0,125W	1
R817	J707385P683	RES MFILM 68K OHM 0,125W	1
R818	J707476P58	RES DEPOS 560K OHM 0,1W	1
R819	J707385P224	RES MFILM 220K OHM 0,125W	1
R820	J707385P154	RES MFILM 150K OHM 0,125W	1
R821	J707478P12	RES VAR 22K OHM 0,05W	1
R822	J707385P103	RES MFILM 10K OHM 0,125W	1
R824	J707478P6	RES VAR 2,2K OHM 0,05W	1
R825	J707385P220	RES MFILM 22 0HM 0,125W	1
R901	J707385P102	RES MFILM 1K OHM 0,125W	1
R902	J707385P473	RES MFILM 47K OHM 0,125W	1
R903	J707385P223	RES MFILM 22K OHM 0,125W	1
R904	J707385P104	RES MFILM 100K OHM 0,125W	1
R905	J707385P334	RES MFILM 330K 0HM 0,125W	1

CIRCUIT POSITION	COMPONENT ITEM NUMBER	COMPONENT DESCRIPTION	QUANTITY
R906	J707476P51	RES DEPOS 150K OHM	1
R907	J707385P473	RES MFILM 47K OHM 0,125W	1
R908	J707385P222	RES MFILM 2,2K OHM 0,125W	1
R909	J707385P104	RES MFILM 100K OHM 0,125W	1
R910	J707385P104	RES MFILM 100K OHM 0,125W	1
R911	J707385P103	RES MFILM 10K OHM 0,125W	1
R912	J707385P101	RES MFILM 100 OHM 0,125W	1
R913	J707385P103	RES MFILM 10K OHM 0,125W	1
R914	J707385P271	RES MFILM 270 OHM 0,125W	1
R915	J707385P104	RES MFILM 100K OHM 0,125W	1
R916	J707385P104	RES MFILM 100K OHM 0,125W	1
R917	J707385P104	RES MFILM 100K OHM 0,125W	1
R918	J707385P104	RES MFILM 100K OHM 0,125W	1
R919	J707385P473	RES MFILM 47K OHM 0,125W	1
R920	J707385P473	RES MFILM 47K OHM 0,125W	1
R921	J707385P473	RES MFILM 47K OHM 0,125W	1
R922	J707385P224	RES MFILM 220K OHM 0,125W	1
R923	J707385P104	RES MFILM 100K OHM 0,125W	1
R924	J707385P184	RES MFILM 180K OHM 0,125W	1
R925	J707385P123	RES MFILM 12K OHM 0,125W	1
R926	J707385P224	RES MFILM 220K OHM 0,125W	1
R927	J707385P224	RES MFILM 220K OHM 0,125W	1
R928	J707385P223	RES MFILM 22K OHM 0,125W	1
R929	J707385P223	RES MFILM 22K OHM 0,125W	1
R930	J707385P223	RES MFILM 22K OHM 0,125W	1
R931	J707385P102	RES MFILM 1K OHM 0,125W	1
R932	J707385P103	RES MFILM 10K OHM 0,125W	1
R933	J707385P473	RES MFILM 47K OHM 0,125W	1
R934	J707385P223	RES MFILM 22K OHM 0,125W	1
R936	J707385P271	RES MFILM 270 OHM 0,125W	1
R937	J707385P104	RES MFILM 100K OHM 0,125W	1
R938	J707385P334	RES MFILM 330K 0HM 0,125W	1
R939	J707385P103	RES MFILM 10K OHM 0,125W	1
R940	J707385P104	RES MFILM 100K OHM 0,125W	1
R941	J707385P103	RES MFILM 10K OHM 0,125W	1
R942	J707385P473	RES MFILM 47K OHM 0,125W	1
R943	J707385P473	RES MFILM 47K OHM 0,125W	1
S901	J707133P3	SWITCH	1
U701	J707451P1	INT CKT TBA 820M	1
U702	J707434P1	INT CKT 4051/S016	1
U801	J707450P1	INT CKT LM358	1
U901	J707243P1	INT CKT 4094/S016	1
U902	J707243P1	INT CKT 4094/S016	1
U903	J707322P1	INT CKT 14569	1
U904	J707242P2	INT CKT 4013/S014	1
U905	M905852G1	INT CKT WITH: IC , U-CTL. COP344C, PRGMD.	1
U906	J707417P1	INT CKT PROM 256 X 4	(1)

CIRCUIT POSITION	COMPONENT ITEM NUMBER	COMPONENT DESCRIPTION	QUANTITY
U907	J707242P1	INT CKT 4013/S014	1
U908	J707464P1	INT CKT 4070/S014	1
U909	J707264P1	INT CKT 4543/S016	1
U910	J707264P1	INT CKT 4543/S016	1
U911	J707464P1	INT CKT 4070/S014	1
U912	J707264P1	INT CKT 4543/SO16	1
W904	A700134P9	WIRE JUMPER	1
X901	J706356P4	SOC 16 PIN	1
0002	M9-----P1R3	BD PW., REVISION NO.: 3	1
0004	J708413P1	SLV SIL RUBB NAT	0.027 M

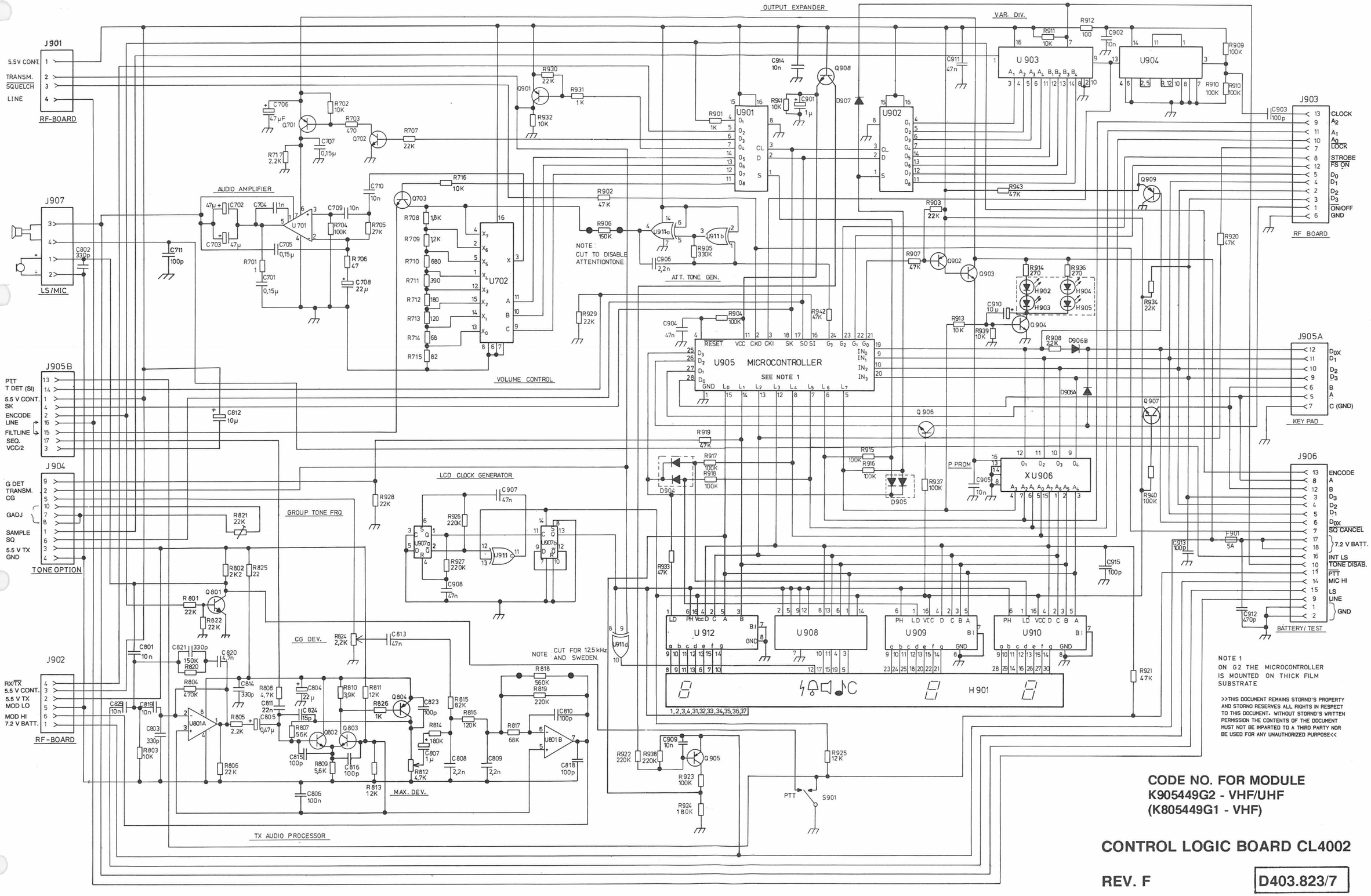

NOTE 1
ON G2 THE MICROCONTROLLER IS MOUNTED ON THICK FILM SUBSTRATE

>>THIS DOCUMENT REMAINS STORNO'S PROPERTY AND STORNO RESERVES ALL RIGHTS IN RESPECT TO THIS DOCUMENT. WITHOUT STORNO'S WRITTEN PERMISSION THE CONTENTS OF THE DOCUMENT MUST NOT BE IMPARTED TO A THIRD PARTY NOR BE USED FOR ANY UNAUTHORIZED PURPOSE<<

CODE NO. FOR MODULE
K905449G2 - VHF/UHF
(K805449G1 - VHF)

CONTROL LOGIC BOARD CL4002

REV. F

D403.823/7

CHAPTER 6b
LOGIC CIRCUITS

CONTROL LOGIC BOARD CL4003, AUTOMATIC VERSION

- CIRCUIT DESCRIPTION
- FUNCTIONAL DIAGRAM
- CL4003

CL4003

CONTROL LOGIC BOARD

The control logic board assumes all the control functions of the radio:

- o Logic control circuitry
  - microcontroller submodule PU4001 with EPROM (including program memory and personality data)
  - frequency divider
  - display driver
  - input/output expansion system
- o Other functions
  - back-up battery
  - TX audio processor
  - audio output amplifier
  - microphone control
  - other functions
- o CL-board, Interconnections

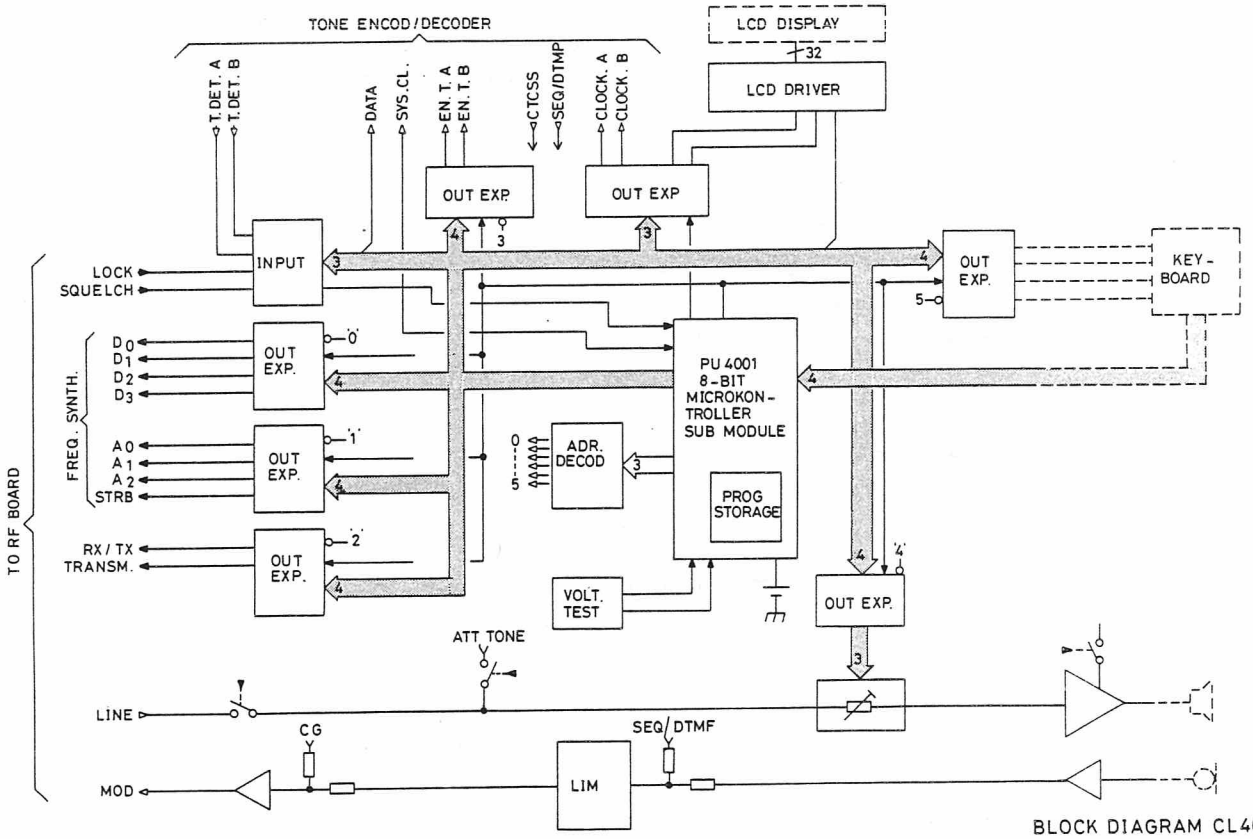

BLOCK DIAGRAM CL4003

D404.005/2

LOGIC CONTROL CIRCUITRY

MICROCONTROLLER SUB-MODULE PU4001
(see separate description)

FREQUENCY DIVIDER U901

The crystal oscillator situated on the RF-board provides the 6.4 MHz (J903 pin 13) to the frequency divider clock input, pin 11 at U901. U901 acts as a buffer to the microcontroller clock and supplies:

1) system clock used in the tone option: 200 kHz (U901, pin 5) (J904, pin 7)
2) clock for power-up/down circuitry: 50 kHz (U901, pin 6)
3) Attention tone: 844 Hz (U901, pin 2) (U902b, c)

DISPLAY DRIVER U913

U913 is served by the output latch U911. The display driver is capable of driving an LCD display with 32 segments in static mode. Segments are loaded serially and a built-in one point oscillator provides the correct waveforms for segment and backplane AC drive voltage.

The LED's H902 to H905 illuminate the display.

INPUT/OUTPUT EXPANSION SYSTEM

One IC (U914) is used to buffer the output expansion system and to isolate the microcontroller in the power-down state, where it receives back-up supply.

One IC (U904) decodes three lines of port 1 into 8 possible addresses, while the lower half of port 1 acts as a 4-bit data bus. Six 4-bit latches (U905, U906, U908, U909, U910, U912) are connected to this bus and serves as output ports.

The three least significant bits in the data bus concurrently acts as select addresses to an input multiplexer (U907).

U911 is an eight bit addressable output latch, serving the display driver (U913) and the optional tone signalling modules.

OTHER FUNCTIONS

BACK UP BATTERY CIRCUITRY B101, U903
and associated components

A lithium battery serves as back-up for the microcontroller data memory.

U903 is a dual comparator of which one gives a logic low-signal to the microcontroller when the battery voltage drops below the specified limit. The other comparator monitors the battery voltage to give a low-signal to start an emergency power down sequence. This to prevent excessive load on the back-up battery in case of improper removal of the main battery.

TX AUDIO PROCESSOR, U801 - Q802, 3, 4
and associated components

BLOCK DIAGRAM
TX audio Processor

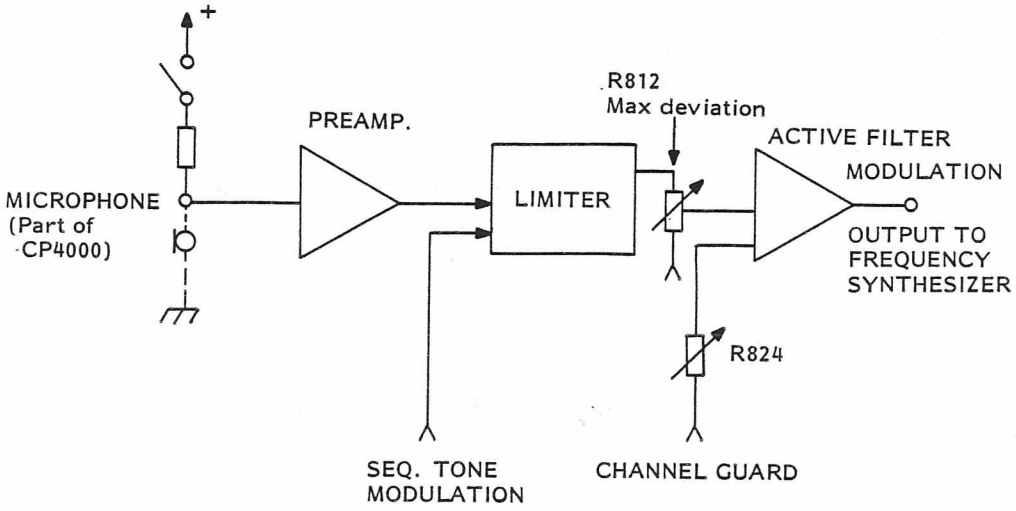

The audio processor consists of a dual operational amplifier (U801) performing the microphone preamplifier and the splatter filter, and a discrete limiter (Q802, Q803, Q804).
The audio processor contains 2 adjustment points R812 and R824 adjusting respectively: The maximum deviation and the optional channel guard tone deviation to be obtained on the transmitter frequency.

AUDIO OUTPUT AMPLIFIER AND VOLUME CONTROL
U701, Q701-Q702, U702 and associated components

BLOCK DIAGRAM
Audio output amplifier

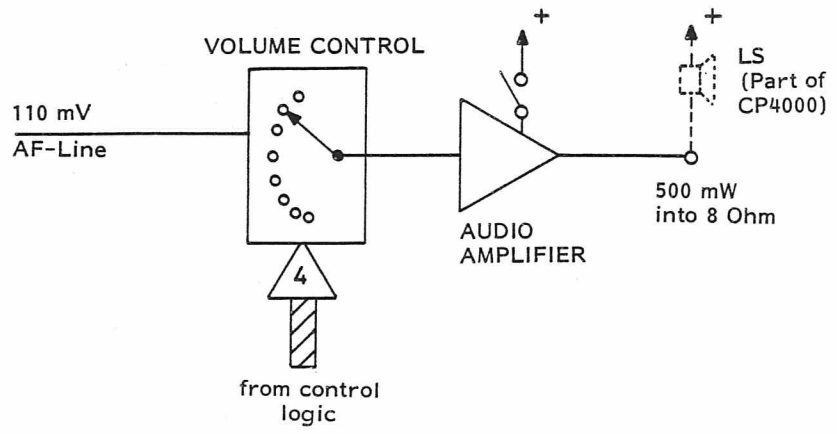

The audio output amplifier consists of a single monolithic IC (U701) giving up to 500 mW output power.
The amplifier is switched off by Q701 and Q702 during stand by and transmit in order to squelch the radio and reduce the power consumption.
U701 is only under power when selected by the microcontroller via the output latch U906.
In connection with the audio amplifier, a digital controlled analog switch (U702) is performing the volume control with 8 selectable levels.

MICROPHONE CONTROL Q801, Q805

Q801 and Q805 controls the bias voltage to the microphone. "PTT" turns bias on if not overrided by tone signalling outputs.

OTHER FUNCTIONS

- ON/OFF
- Transmit signal
- Frequency synthesizer control
- Lock detect function
- Tone detect
- Battery control

INTERFACE TO RF-BOARD

POWER SUPPLY

Current consumption
5.5 V Cont. J902/3:
5.5 V ±0.25 V
<25 mA typ. 15 mA

5.5 V TX J902/2:
5.5 V ±0.25 V
<4 mA

DIGITAL

Synthesizer
Data/address/strobe output
(J903/2, 3, 4, 5, 8, 9, 10, 11):
Uoh >3.9 V, Iomax. 0.1 mA
Uol <1.6 V, Iomax. -0.1 mA

Lock input J903/7:
Uih >4 V
Uil <1 V

Other circuits
ON/OFF output J903/1:
Uoh >9 V
Uol <5 V Iomax. -1 mA

Transmit output J901/2:
Uoh >5 V Iomax. = 10 mA
(10 kOhm pull down)

RX/TX output J902/4:
Uoh >5 V
Uol <0.5 V Io = -2.5 mA

Squelch input J901/3:
Uih >3 V
Uil <1 V CMOS input

ANALOG

110 mV line input J901/4
Vin = 110 mV RMS ±1 dB
DC component: >1.8 V, <2.5 V

Modulation HI output J902/6
Uout: adjustable 0 - 1.6 Vpp
R load >100 Ohm
DC component "5.5 V"/2

6.4/6.5 MHz input J903/13
Uin >3.5 Vpp
std. CMOS input

INTERFACE TO TONE OPTION

DIGITAL

System clock output J904/7: freq.: 200 kHz
Enable tone A/B output J905/10, 11
Clock A/B output J904/4, 3
Data output J904/2
Detect A/B input J905/12, 13
Aux output J905/14

ANALOG

Seq./DTMF tone modulation input J905/16
280 mV RMS for 70% dev.
Zin = 4.7 kOhm

CTCSS (CG) modulation input J904/1
>165 mV RMS nom. for 20% dev.
Zin = 2.2 kOhm

Filtered line input J904/6
110 mV RMS ±1 dB
Zin typ. 3 kOhm
DC component: >1.8 V, <2.5 V

INTERFACE TO BATTERY/TEST CONNECTOR

BATTERY

Battery voltage input J906/1, 2 - 17, 18
6.1 - 8.6 V (7.2 V nom.)

Current consumption (CL4003 alone)

OFF-state:	typ. app. 10 uA
ON and idle:	typ. 15 mA
500 mW AF:	170 mA/typ. 150 mA
Light on:	add. max. 25 mA

TEST

Digital

Keyboard:	(matrix)	
Scan output	J905/3, 4, 5	
	J906/8, 12, 13	
Data input	J905/6, 7, 9, 8	
	J906/6, 5, 4, 3:	Uil >3 V/Ii/ <500 uA
		Uil <0.3 V
PTT input	J906/11:	Uil <0.5 V/Iil/ <0.7 mA
PGR. SW input	J906/10:	Uil <1 V/Iil/ <0.5 mA

Analog

MIC input J906/14:	10 mV RMS 60% of rated dev. Zin typ. 1.7 kOhm
Ext. LS output J906/15:	500 mW into 8 Ohm (DC-connection from J906/17, 18 to the other terminal on LS)
Int LS output:	Connect to J906/17, 18 to enable internal LS

TECHNICAL SPECIFICATIONS

CONTROL LOGIC

Low battery turn off voltage
<6.1 V, >5.7 V

TX AUDIO PROCESSOR

Gain
32 ±3 dB at 1 kHz

Audio response
(5 mV RMS at mic. input)

100 Hz:	<-30 dB
400 Hz:	-8.5 dB +/-1 dB
1 kHz:	0 dB (ref.)
2.7 kHz:	+7.6 dB +/-0.4 dB
6 kHz:	<-6 dB
25 kHz:	<-40 dB

Distortion
max. 1%
(10 mV RMS/1 kHz at mic. input)

AUDIO POWER AMPLIFIER

Gain
26 ±3 dB at 1 kHz, Vin = 25 mV, R1 = 8 Ohm

Rated output
0.5 W

Audio distortion
<8%, f = 1 kHz, Po = 0.5 W, R1 = 8 Ohm, Vcc = 7.2 V

Audio response
(Vin = 25 mV, R1 = 8 Ohm)
6 dB per octave deemphasis, 300 Hz - 6 kHz

300 Hz:	9 ±1.5 dB
1 kHz:	0 dB (ref.)
2.7 kHz:	-8.5 ±1 dB
6 kHz:	-15.5 ±1 dB

Efficiency
Typ. 50%

Attack time
Typ. 40 ms

Volume control, 8 levels
5 ±1 dB per step

Temperature range
Operating: -25° to + 60°C
Storage -40° to + 70°C

Mechanical dimensions
Length x Width x Height:
60.9 x 114.4 x 17 mm

Weight
63 g

Storno

Storno

J901
5V5 CONT 1
TRANSM 2
SQUELCH 3
LINE 4

J907
3
4
1 +
2 -

J904
200KHz 7
FILT.LINE 6
LINE 5
CLOCK A 4
CLOCK B 3
DATA 2
CG 1

J902
7V2 BAT 1
5V5 TX 2
5V5 CONT 3
RX / TX 4
MOD LO 5
MOD HI 6

MUTING
AUDIO POWER AMP.
DIVIDER
BACK - UP BATTERY
VOL. CONTR.
800Hz ATT. TONE
NOTE: CUT TO DISABLE ATTENTION TONE
MICRO CONTR SUB MODUL
* IF 8K PROGRAM MEMORY, MOUNT R930, 2K2
ADR. DECOD
PAR. OUT EXP. KEYB. VOL.
MUX. INP.
PAR. OUT EXP
DISPLAY LIGHT
PAR. OUT EXP.
PAR. OUT EXP.
OUT EXP.
PAR. OUT EXP.
FREQ. SYNTH.
ON/OFF
MIC. CONTROL
TX AUDIO PROC.
MAX. DIV.
CG DEV.
NOTE : CUT FOR 12.5KHz AND SWEDEN
DISPLAY DRIVER
U913
H901

J906A
3 D3
4 D2
5 D1
6 D0
8 A
12 B
13 C

J905A
8 D3
9 D2
7 D1
6 D0
5 A
4 B
3 C
2 D GND

J905B
17 5V5 CONT
12 DET. A
13 DET. B
14 AUX. OUT
11 ENA.TONE B
10 ENA.TONE A
16 SEQ/DTMF
15 GND

J903
12 FS
7 LOCK
8 STROBE
9 A2
11 A1
10 A0
3 D3
2 D2
4 D1
5 D0
1 ON / OFF
13 6,4 MHz
6 GND

J906B
11 PTT
7
10 PGR.SW
17 7V2 BAT
18
1 GND
2
16 INT. LS
14 MIC
15 LS
9 LINE

NOTE: COMPONENT MARKED C905 10µ ARE ALL MOUNTED ON COMPONENT SIDE OF P.W. BOARD.

REV.A

CONTROL LOGIC CL4003

MODULE CODE NO. K805602G1
MOUNTED BOARD CODE NO. M905908G1

D404.002/2

Storno

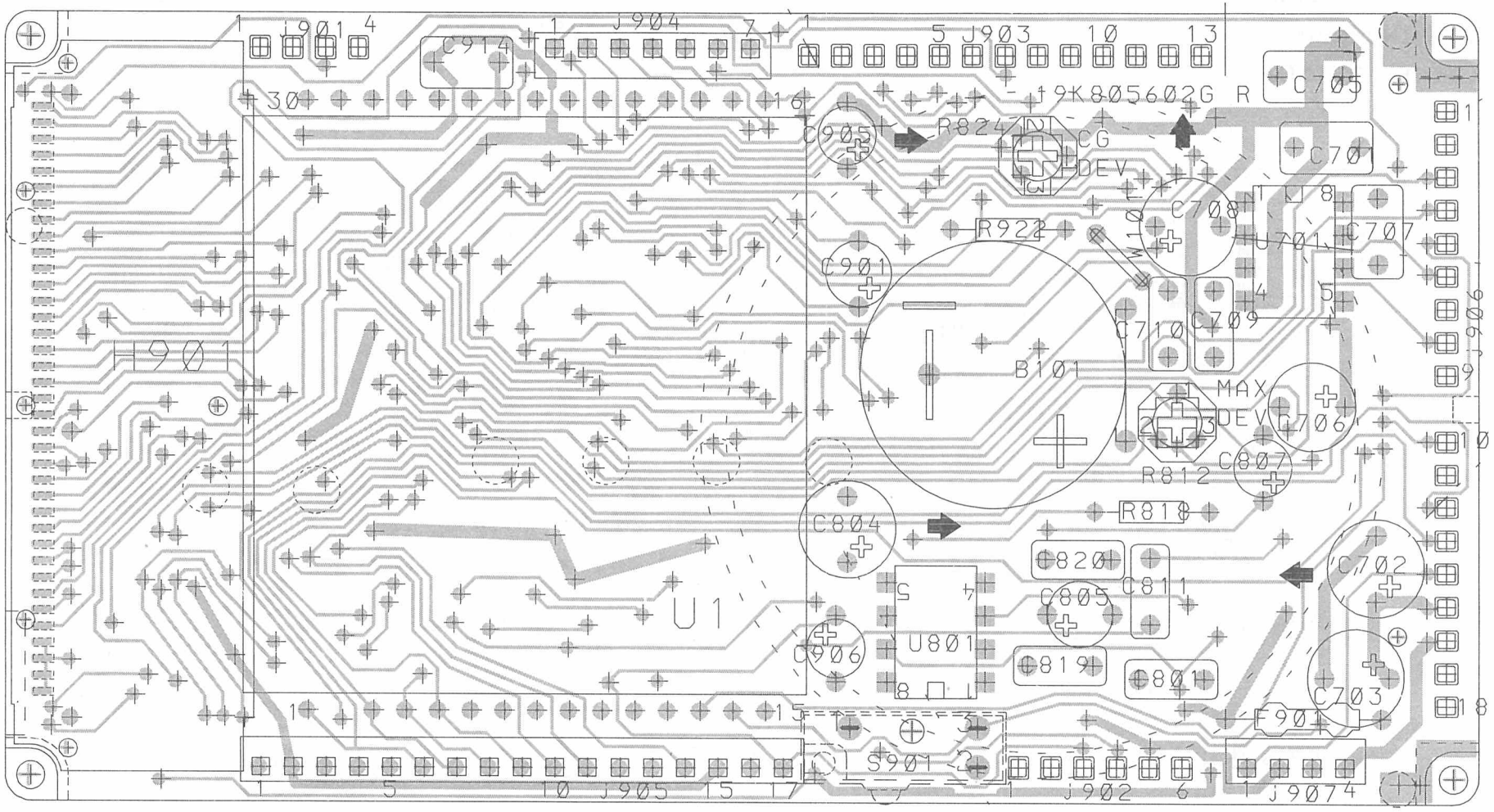

MODULE CODE NO. K805602G1
MOUNTED BOARD CODE NO. M905908G1

CONTROL LOGIC CL4003
COMPONENT LAYOUT
COMPONENT-SIDE

D404.003

Storno

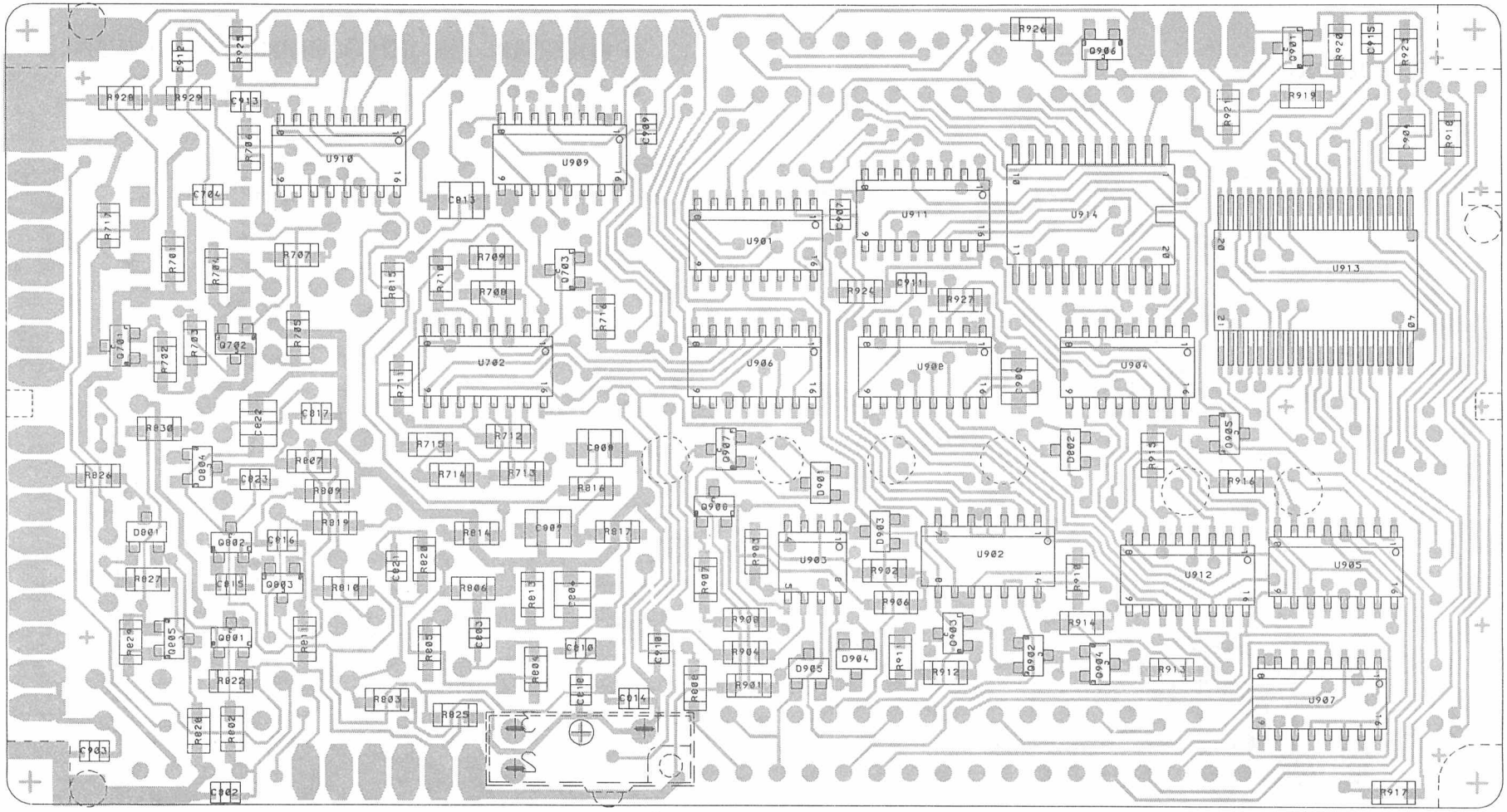

MODULE CODE NO. K805602G1
MOUNTED BOARD CODE NO. M905908G1

CONTROL LOGIC CL4003
COMPONENT LAYOUT
CHIP-SIDE

D404.004

Storno

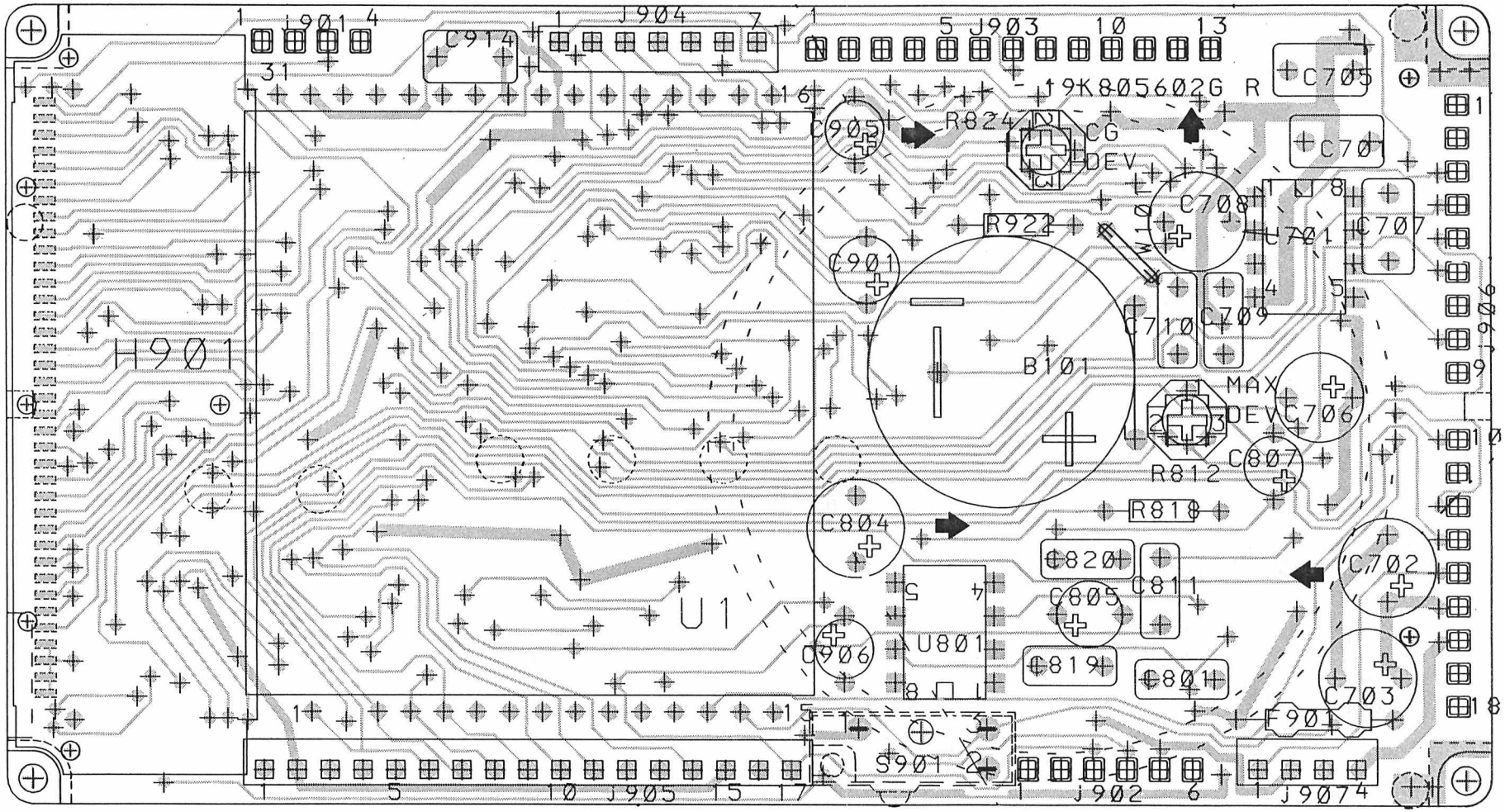

MODULE CODE NO. K805602G1

MOUNTED BOARD CODE NO. M905908G1

CONTROL LOGIC CL4003

COMPONENT LAYOUT

COMPONENT-SIDE

REV.1

D404.003/2

Storno

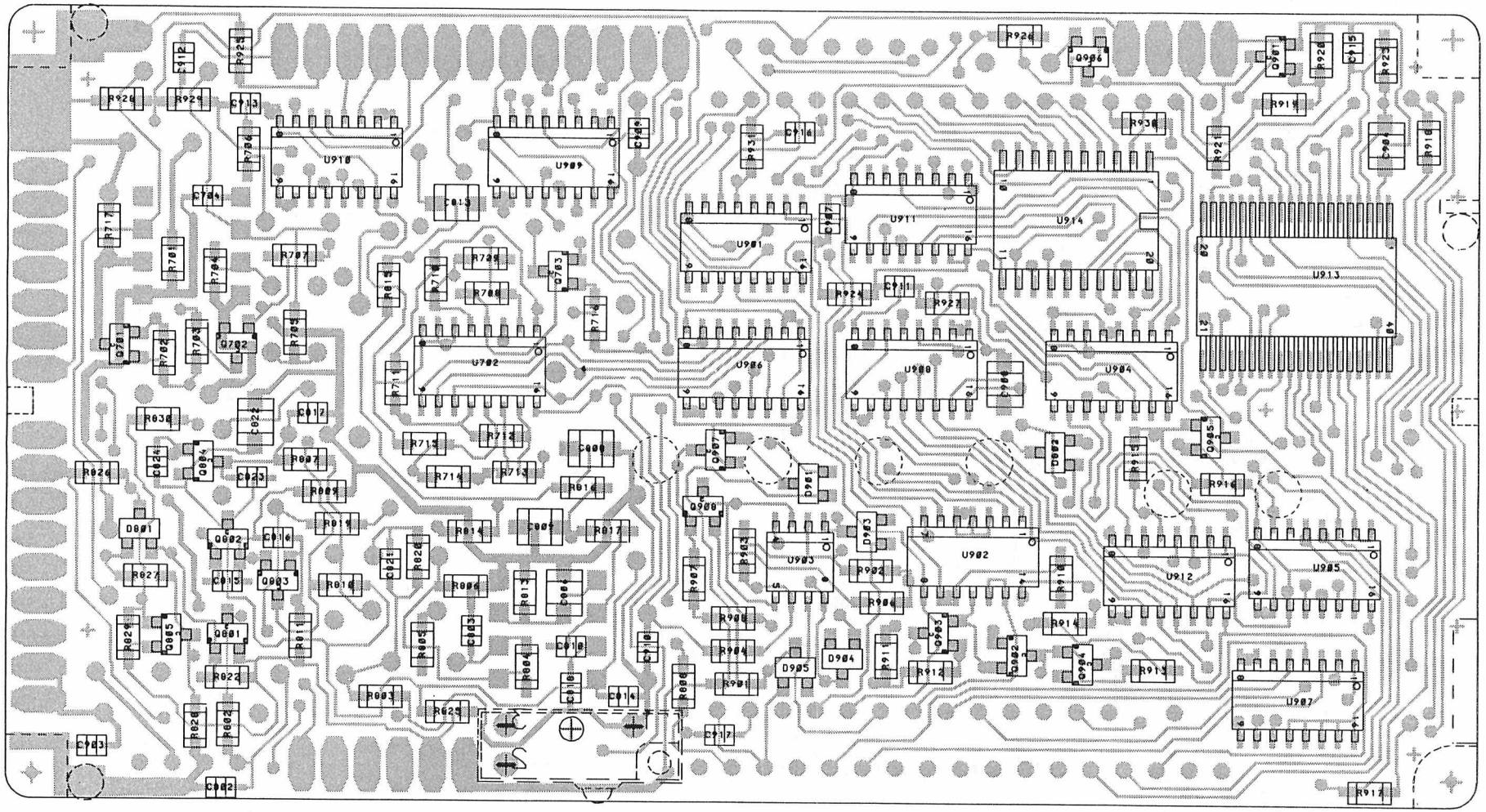

MODULE CODE NO. K805602G1
MOUNTED BOARD CODE NO. M905908G1

CONTROL LOGIC CL4003
COMPONENT LAYOUT
CHIP-SIDE
REV.1 D404.004/2

ITEM NUMBER	DESCRIPTION
K805602G1	CL 4003 ASM
M905908G1	SUB. ASM.: CPNT BD PW., F. CL 4003
K805332G1	SUB. ASM.: DISPLAY, LIGHT-
M905910G1	SUB. ASM.: PU 4001
M905912G1	SUB. ASM.: TQ 4009

P A R T S L I S T :

CIRCUIT POSITION	COMPONENT ITEM NUMBER	COMPONENT DESCRIPTION	QUANTITY
A1	M905908G1	COMPONENT BD ASM CL4003	1 (SEE BELOW)
B101	J708463P2	BTRY PRIM 170MAH CR2032	1
H901	J707230P1	DIS LT	1
S901	J707133P3	SW PUSH PLNGR AU	1
0003	L855331P1	HSG DIS	1
0004	L855332P1	COV DIS	1
0005	K805332G1	DIS LT ASM	1
0006	J707458P1	CONN COND RUB ZEB.STRIP	1
0007	J708413P1	SLV SIL RUB NAT	0,027 M
0011	J708995P8	LABEL REV LTR	1
0012	A701303P1	NYLON CORD #6	0,15 M

A1 : M905908G1 : COMPONENT BD ASM CL4003 :

C701	J707412P10	CAP PYES 150N 10% 63V	1
C702	J707444P17	CAP TA SOL 47U 20% 10V	1
C703	J707444P17	CAP TA SOL 47U 20% 10V	1
C704	J707438P5	CAP CER CL2 1N 10% 50V	1
C705	J707412P10	CAP PYES 150N 10% 63V	1
C706	J707353P9	CAP ELECT 47U 20% 16V	1
C707	J707412P10	CAP PYES 150N 10% 63V	1
C708	J707444P8	CAP TA SOL 22U 20% 16V	1
C709	J707412P3	CAP PYES 10N 10% 63V	1
C710	J707412P3	CAP PYES 10N 10% 63V	1
C801	J707412P3	CAP PYES 10N 10% 63V	1
C802	J707436P73	CAP CER NPO 330P 5% 50V	1
C803	J707436P73	CAP CER NPO 330P 5% 50V	1
C804	J707444P8	CAP TA SOL 22U 20% 16V	1
C805	J707444P3	CAP TA SOL 0U47 20% 35V	1
C806	J707438P26	CAP CER CL2 100N 10% 50V	1
C807	J707353P4	CAP ELECT 1U0 20% 50V	1

CIRCUIT POSITION	COMPONENT ITEM NUMBER	COMPONENT DESCRIPTION	QUANTITY
C808	J707436P93	CAP CER NPO 2N2 5% 50V	1
C809	J707436P93	CAP CER NPO 2N2 5% 50V	1
C810	J707436P61	CAP CER NPO 100P 5% 50V	1
C811	J707412P5	CAP PYES 22N 10% 63V	1
C813	J707438P22	CAP CER CL2 47N 10% 50V	1
C814	J707436P73	CAP CER NPO 330P 5% 50V	1
C815	J707436P61	CAP CER NPO 100P 5% 50V	1
C816	J707436P61	CAP CER NPO 100P 5% 50V	1
C817	J707436P61	CAP CER NPO 100P 5% 50V	1
C818	J707436P61	CAP CER NPO 100P 5% 50V	1
C819	J707412P3	CAP PYES 10N 10% 63V	1
C820	J707412P1	CAP PYES 4N7 10% 63V	1
C821	J707436P73	CAP CER NPO 330P 5% 50V	1
C822	J707436P87	CAP CER NPO 1N2 5% 50V	1
C823	J707436P61	CAP CER NPO 100P 5% 50V	1
C901	J707444P3	CAP TA SOL 0U47 20% 35V	1
C903	J707438P3	CAP CER CL2 470P 10% 50V	1
C904	J707436P87	CAP CER NPO 1N2 5% 50V	1
C905	J707353P7	CAP ELECT 10U 20% 16V	1
C906	J707353P7	CAP ELECT 10U 20% 16V	1
C907	J707438P14	CAP CER CL2 10N 10% 50V	1
C908	J707438P26	CAP CER CL2 100N 10% 50V	1
C909	J707438P14	CAP CER CL2 10N 10% 50V	1
C910	J707438P14	CAP CER CL2 10N 10% 50V	1
C911	J707438P14	CAP CER CL2 10N 10% 50V	1
C912	J707436P61	CAP CER NPO 100P 5% 50V	1
C913	J707438P14	CAP CER CL2 10N 10% 50V	1
C914	J707412P10	CAP PYES 150N 10% 63V	1
C915	J707438P14	CAP CER CL2 10N 10% 50V	1
D801	J707390P1	DIO SI SIG BAV 74	1
D802	J708681P1	DIO SI SIG BAW 56	1
D901	J707390P1	DIO SI SIG BAV 74	1
D903	J707390P1	DIO SI SIG BAV 74	1
D904	J707390P1	DIO SI SIG BAV 74	1
D905	J707459P1	DIO SI ZENR 4V7 5% 0,2W	1
F901	J707468P11	FUSE CTG 5.0A F	1
J901	J706434P2	CONT EL BOT ENTRY	4
J902	J706434P2	CONT EL BOT ENTRY	6
J903	J706434P2	CONT EL BOT ENTRY	13
J904	J707442P11	CONN PWB FEM 07 CKT	1
J905	J707442P3	CONN PWB FEM 17 CKT	1
J906	J706434P2	CONT EL BOT ENTRY	18
J907	J707442P1	CONN PWB FEM 04 CKT	1
Q701	J707432P1	TSTR PNP SI BCX 18	1
Q702	J707386P1	TSTR NPN SI BCW 32	1
Q703	J707386P1	TSTR NPN SI BCW 32	1
Q801	J707387P1	TSTR PNP SI BCW 30	1
Q802	J707386P1	TSTR NPN SI BCW 32	1
Q803	J707386P1	TSTR NPN SI BCW 32	1
Q804	J707387P1	TSTR PNP SI BCW 30	1

CIRCUIT POSITION	COMPONENT ITEM NUMBER	COMPONENT DESCRIPTION	QUANTITY
Q805	J707387P1	TSTR PNP SI BCW 30	1
Q901	J707432P1	TSTR PNP SI BCX 18	1
Q902	J707386P1	TSTR NPN SI BCW 32	1
Q903	J707386P1	TSTR NPN SI BCW 32	1
Q904	J707386P1	TSTR NPN SI BCW 32	1
Q905	J707386P1	TSTR NPN SI BCW 32	1
Q906	J707386P1	TSTR NPN SI BCW 32	1
Q907	J707386P1	TSTR NPN SI BCW 32	1
Q908	J707387P1	TSTR PNP SI BCW 30	1
R701	J707385P910	RES MFILM 1R0 20% 1/8W	1
R702	J707385P103	RES MFILM 10K 5% 1/8W	1
R703	J707385P471	RES MFILM 470R 5% 1/8W	1
R704	J707385P104	RES MFILM 100K 5% 1/8W	1
R705	J707385P273	RES MFILM 27K 5% 1/8W	1
R706	J707385P470	RES MFILM 47R 5% 1/8W	1
R707	J707385P223	RES MFILM 22K 5% 1/8W	1
R708	J707385P182	RES MFILM 1K8 5% 1/8W	1
R709	J707385P122	RES MFILM 1K2 5% 1/8W	1
R710	J707385P681	RES MFILM 680R 5% 1/8W	1
R711	J707385P391	RES MFILM 390R 5% 1/8W	1
R712	J707385P181	RES MFILM 180R 5% 1/8W	1
R713	J707385P121	RES MFILM 120R 5% 1/8W	1
R714	J707385P680	RES MFILM 68R 5% 1/8W	1
R715	J707385P820	RES MFILM 82R 5% 1/8W	1
R716	J707385P103	RES MFILM 10K 5% 1/8W	1
R717	J707385P222	RES MFILM 2K2 5% 1/8W	1
R802	J707385P222	RES MFILM 2K2 5% 1/8W	1
R803	J707385P103	RES MFILM 10K 5% 1/8W	1
R804	J707385P474	RES MFILM 470K 5% 1/8W	1
R805	J707385P222	RES MFILM 2K2 5% 1/8W	1
R806	J707385P223	RES MFILM 22K 5% 1/8W	1
R807	J707385P563	RES MFILM 56K 5% 1/8W	1
R808	J707385P472	RES MFILM 4K7 5% 1/8W	1
R809	J707385P562	RES MFILM 5K6 5% 1/8W	1
R810	J707385P392	RES MFILM 3K9 5% 1/8W	1
R811	J707385P123	RES MFILM 12K 5% 1/8W	1
R812	J707478P8	RES VAR 4,7K 25% 0,05W	1
R813	J707385P123	RES MFILM 12K 5% 1/8W	1
R814	J707385P184	RES MFILM 180K 5% 1/8W	1
R815	J707385P823	RES MFILM 82K 5% 1/8W	1
R816	J707385P124	RES MFILM 120K 5% 1/8W	1
R817	J707385P683	RES MFILM 68K 5% 1/8W	1
R818	J707476P58	RES DEPC 560K 10% 1/10W	1
R819	J707385P224	RES MFILM 220K 5% 1/8W	1
R820	J707385P154	RES MFILM 150K 5% 1/8W	1
R822	J707385P103	RES MFILM 10K 5% 1/8W	1
R824	J707478P6	RES VAR 2,2K OHM 0,05W	1
R825	J707385P220	RES MFILM 22R 5% 1/8W	1
R826	J707385P223	RES MFILM 22K 5% 1/8W	1
R827	J707385P471	RES MFILM 470R 5% 1/8W	1
R828	J707385P223	RES MFILM 22K 5% 1/8W	1
R829	J707385P103	RES MFILM 10K 5% 1/8W	1
R830	J707385P223	RES MFILM 22K 5% 1/8W	1

CIRCUIT POSITION	COMPONENT ITEM NUMBER	COMPONENT DESCRIPTION	QUANTITY	
R901	J707385P223	RES MFILM 22K 5% 1/8W	1	
R902	J707385P223	RES MFILM 22K 5% 1/8W	1	
R903	J707385P183	RES MFILM 18K 5% 1/8W	1	
R904	J707385P333	RES MFILM 33K 5% 1/8W	1	
R906	J707385P823	RES MFILM 82K 5% 1/8W	1	
R907	J707385P223	RES MFILM 22K 5% 1/8W	1	
R908	J707385P153	RES MFILM 15K 5% 1/8W	1	
R910	J707385P104	RES MFILM 100K 5% 1/8W	1	
R911	J707385P393	RES MFILM 39K 5% 1/8W	1	
R912	J707385P393	RES MFILM 39K 5% 1/8W	1	
R913	J707385P223	RES MFILM 22K 5% 1/8W	1	
R914	J707385P472	RES MFILM 4K7 5% 1/8W	1	
R915	J707385P103	RES MFILM 10K 5% 1/8W	1	
R916	J707385P103	RES MFILM 10K 5% 1/8W	1	
R917	J707385P271	RES MFILM 270R 5% 1/8W	1	
R918	J707385P271	RES MFILM 270R 5% 1/8W	1	
R919	J707385P222	RES MFILM 2K2 5% 1/8W	1	
R920	J707385P223	RES MFILM 22K 5% 1/8W	1	
R921	J707385P103	RES MFILM 10K 5% 1/8W	1	
R922	J707476P51	RES DEPC 150K 5% 1/10W	1	
R923	J707385P105	RES MFILM 1M0 10% 1/8W	1	
R924	J707385P101	RES MFILM 100R 5% 1/8W	1	
R925	J707385P910	RES MFILM 1R0 20% 1/8W	1	
R926	J707385P223	RES MFILM 22K 5% 1/8W	1	
R927	J707385P104	RES MFILM 100K 5% 1/8W	1	
R928	J707385P104	RES MFILM 100K 5% 1/8W	1	
R929	J707385P154	RES MFILM 150K 5% 1/8W	1	
U001	M905910G1	INT CKT, PU 4001 ASM	1	(SEE BELOW)
U002	M905912G1	INT CKT, TQ 4009 ASM	1	(SEE BELOW)
U701	J707451P1	IC LIN AF-AMP 820	1	
U702	J707434P1	IC DIG MUX 4051 CMOS	1	
U801	J707450P1	IC LIN OP-AMP 358	1	
U901	J708785P1	IC DIG CNTR PC 74HC4060	1	
U902	J708786P1	IC DIG GATE PC 74 HC 132	1	
U903	J708165P4	IC LIN OP-AMP LM 358	1	
U904	J708787P1	IC DIG DECO PC 74 HC 138	1	
U905	J708789P1	IC DIG FF-D PC 74 HC 173	1	
U906	J708789P1	IC DIG FF-D PC 74 HC 173	1	
U907	J708788P1	IC DIG MUX PC 74 HC 151	1	
U908	J708789P1	IC DIG FF-D PC 74 HC 173	1	
U909	J708789P1	IC DIG FF-D PC 74 HC 173	1	
U910	J708789P1	IC DIG FF-D PC 74 HC 173	1	
U911	J708790P1	IC DIG LTH PC 74 HC 259	1	
U912	J708789P1	IC DIG FF-D PC 74 HC 173	1	
U913	J708430P2	IC DIG LCD 2112	1	
U914	J708790P3	IC DIG LTH PC 74 HC 573	1	
0002	M------P1R0	BD PW REVISION NO.0		

CIRCUIT POSITION	COMPONENT ITEM NUMBER	COMPONENT DESCRIPTION	QUANTITY
U001 :	M905910G1 :	INT CKT, PU 4001 ASM :	
C101	J707438P14	CAP CER CL2 10N 10% 50V	1
C102	J707438P26	CAP CER CL2 100N 10% 50V	1
C103	J707438P26	CAP CER CL2 100N 10% 50V	1
C104	J707438P26	CAP CER CL2 100N 10% 50V	1
D101	J707390P1	DIO SI SIG BAV 74	1
D102	J707390P1	DIO SI SIG BAV 74	1
D103	J707390P1	DIO SI SIG BAV 74	1
D104	J707390P1	DIO SI SIG BAV 74	1
D105	J707390P1	DIO SI SIG BAV 74	1
D106	J707390P1	DIO SI SIG BAV 74	1
D107	J707390P1	DIO SI SIG BAV 74	1
Q101	J707387P1	TSTR PNP SI BCW 30	1
U001		INT CKT (THK.FLM)	1
U101	J708468P2	IC UP 8-BIT, 80C39	1
U102	J707243P3	IC DIG REG 4035	1
U103	J708790P2	IC DIG LTH PC 74 HC 75	1
U104	J708790P2	IC DIG LTH PC 74 HC 75	1
U105	J708786P2	IC DIG GATE PC 74 HC 00	1
X101	J708838P28	IC SOCKET 28 CKT (F. PROGRAM - PROM)	1
0004	J709019P1	TAPE PYES TRPT 0.17X44.0	0,04380M
U002 :	M905912G1 :	INT CKT, TQ 4009 ASM :	
C101	J707438P14	CAP CER CL2 10N 10% 50V	1
C102	J707438P10	CAP CER CL2 4N7 10% 50V	1
C103	J707438P5	CAP CER CL2 1N 10% 50V	1
C104	A700045P6	CAP TA SOL 1U0 20% 10V	1
C105	J707438P26	CAP CER CL2 100N 10% 50V	1
C106	J707438P26	CAP CER CL2 100N 10% 50V	1
C107	J707363P4	CAP CER NPO 220P 2% 50V	1
C108	J707363P7	CAP CER NPO 470P 2% 50V	1
C109	A700045P7	CAP TA SOL 2U2 20% 10V	1
C110	J707438P26	CAP CER CL2 100N 10% 50V	1
C111	J707438P26	CAP CER CL2 100N 10% 50V	1
U001		INT CKT (THK-FLM)	1
U101	J707859P1	IC LIN OP-AMP 4558	1
U102	J707859P1	IC LIN OP-AMP 4558	1
U103	B801180G1	INT CKT CUST DTD	1
U104	B801180G1	INT CKT CUST DTD	1
U105	J708791P1	IC DIG BUFR 74HC367	1
U106	J707859P1	IC LIN OP-AMP 4558	1

ITEM NUMBER	DESCRIPTION
K805602G1	CL 4003 ASM
M905908G1	SUB. ASM.: CPNT BD PW., F. CL 4003
K805332G1	SUB. ASM.: DISPLAY, LIGHT-
M905910G1	SUB. ASM.: PU 4001
M905912G1	SUB. ASM.: TQ 4009

P A R T S L I S T :

CIRCUIT POSITION	COMPONENT ITEM NUMBER	COMPONENT DESCRIPTION	QUANTITY	
A1	M905908G1	COMPONENT BD ASM CL4003	1	(SEE BELOW)
B101	J708463P2	BTRY PRIM 170MAH CR2032	1	
H901	J707230P1	DIS LT	1	
S901	J707133P3	SW PUSH PLNGR AU	1	
U001	M905910G1	PU 4001 , PWR SUPPLY UNIT	1	SEE: PAGE 5
U002	M905912G1	TQ 4009 , TONE UNIT	1	SEE: PAGE 6
0003	L855331P1	HSG DIS	1	
0004	L855332P1	COV DIS	1	
0005	K805332G1	DIS LT ASM	1	
0006	J707458P1	CONN COND RUB ZEB.STRIP	1	
0007	J708413P1	SLV SIL RUB NAT	0,027 M	
0011	J708995P8	LABEL REV LTR	1	
0012	A701303P1	NYLON CORD £6	0,15 M	

A1 : M905908G1 : COMPONENT BD ASM CL4003 :

C701	J707412P10	CAP PYES 150N 10% 63V	1
C702	J707444P17	CAP TA SOL 47U 20% 10V	1
C703	J707444P17	CAP TA SOL 47U 20% 10V	1
C704	J707438P5	CAP CER CL2 1N 10% 50V	1
C705	J707412P10	CAP PYES 150N 10% 63V	1
C706	J707353P9	CAP ELECT 47U 20% 16V	1
C707	J707412P10	CAP PYES 150N 10% 63V	1
C708	J707444P8	CAP TA SOL 22U 20% 16V	1
C709	J707412P3	CAP PYES 10N 10% 63V	1
C710	J707412P3	CAP PYES 10N 10% 63V	1
C801	J707412P3	CAP PYES 10N 10% 63V	1

	CIRCUIT POSITION		COMPONENT ITEM NUMBER		COMPONENT DESCRIPTION		QUANTITY
	C802		J707436P73		CAP CER NPO 330P 5% 50V		1
	C803		J707436P73		CAP CER NPO 330P 5% 50V		1
	C804		J707444P8		CAP TA SOL 22U 20% 16V		1
	C805		J707444P3		CAP TA SOL 0U47 20% 35V		1
	C806		J707438P26		CAP CER CL2 100N 10% 50V		1
	C807		J707353P4		CAP ELECT 1U0 20% 50V		1
	C808		J707436P93		CAP CER NPO 2N2 5% 50V		1
	C809		J707436P93		CAP CER NPO 2N2 5% 50V		1
	C810		J707436P61		CAP CER NPO 100P 5% 50V		1
	C811		J707412P5		CAP PYES 22N 10% 63V		1
	C813		J707438P22		CAP CER CL2 47N 10% 50V		1
	C814		J707436P73		CAP CER NPO 330P 5% 50V		1
	C815		J707436P61		CAP CER NPO 100P 5% 50V		1
	C816		J707436P61		CAP CER NPO 100P 5% 50V		1
	C817		J707436P61		CAP CER NPO 100P 5% 50V		1
	C818		J707436P61		CAP CER NPO 100P 5% 50V		1
	C819		J707412P3		CAP PYES 10N 10% 63V		1
	C820		J707412P1		CAP PYES 4N7 10% 63V		1
	C821		J707436P73		CAP CER NPO 330P 5% 50V		1
	C822		J707436P87		CAP CER NPO 1N2 5% 50V		1
	C823		J707436P61		CAP CER NPO 100P 5% 50V		1
*	C824	*	J707436P77	*	CAP CER NPO 470P 5% 50V	*	1
	C901		J707444P3		CAP TA SOL 0U47 20% 35V		1
	C903		J707438P3		CAP CER CL2 470P 10% 50V		1
	C904		J707436P87		CAP CER NPO 1N2 5% 50V		1
	C905		J707353P7		CAP ELECT 10U 20% 16V		1
	C906		J707353P7		CAP ELECT 10U 20% 16V		1
	C907		J707438P14		CAP CER CL2 10N 10% 50V		1
	C908		J707438P26		CAP CER CL2 100N 10% 50V		1
	C909		J707438P14		CAP CER CL2 10N 10% 50V		1
	C910		J707438P14		CAP CER CL2 10N 10% 50V		1
	C911		J707438P14		CAP CER CL2 10N 10% 50V		1
	C912		J707436P61		CAP CER NPO 100P 5% 50V		1
	C913		J707438P14		CAP CER CL2 10N 10% 50V		1
	C914		J707412P10		CAP PYES 150N 10% 63V		1
	C915		J707438P14		CAP CER CL2 10N 10% 50V		1
*	C916	*	J707436P61	*	CAP CER NPO 100P 5% 50V	*	1
*	C917	*	J707436P77	*	CAP CER NPO 470P 5% 50V	*	1
	D801		J707390P1		DIO SI SIG BAV 74		1
	D802		J708681P1		DIO SI SIG BAW 56		1
	D901		J707390P1		DIO SI SIG BAV 74		1
	D903		J707390P1		DIO SI SIG BAV 74		1
	D904		J707390P1		DIO SI SIG BAV 74		1
	D905		J707459P1		DIO SI ZENR 4V7 5% 0,2W		1
	F901		J707468P11		FUSE CTG 5.0A F		1
	J901		J706434P2		CONT EL BOT ENTRY		4

CIRCUIT POSITION	COMPONENT ITEM NUMBER	COMPONENT DESCRIPTION	QUANTITY
J902	J706434P2	CONT EL BOT ENTRY	6
J903	J706434P2	CONT EL BOT ENTRY	13
J904	J707442P11	CONN PWB FEM 07 CKT	1
J905	J707442P3	CONN PWB FEM 17 CKT	1
J906	J706434P2	CONT EL BOT ENTRY	18
J907	J707442P1	CONN PWB FEM 04 CKT	1
Q701	J707432P1	TSTR PNP SI BCX 18	1
Q702	J707386P1	TSTR NPN SI BCW 32	1
Q703	J707386P1	TSTR NPN SI BCW 32	1
Q801	J707387P1	TSTR PNP SI BCW 30	1
Q802	J707386P1	TSTR NPN SI BCW 32	1
Q803	J707386P1	TSTR NPN SI BCW 32	1
Q804	J707387P1	TSTR PNP SI BCW 30	1
Q805	J707387P1	TSTR PNP SI BCW 30	1
Q901	J707432P1	TSTR PNP SI BCX 18	1
Q902	J707386P1	TSTR NPN SI BCW 32	1
Q903	J707386P1	TSTR NPN SI BCW 32	1
Q904	J707386P1	TSTR NPN SI BCW 32	1
Q905	J707386P1	TSTR NPN SI BCW 32	1
Q906	J707386P1	TSTR NPN SI BCW 32	1
Q907	J707386P1	TSTR NPN SI BCW 32	1
Q908	J707387P1	TSTR PNP SI BCW 30	1
* R000	* J707385P102	* RES MFILM 1K0 5% 1/8W	* 1
* R112	* J706035P34	* RES DEPC 4K7 5% 0.1W	* 1
* R113	* J707385P822	* RES MFILM 8K2 5% 1/8W	* 1
R701	J707385P910	RES MFILM 1R0 20% 1/8W	1
R702	J707385P103	RES MFILM 10K 5% 1/8W	1
R703	J707385P471	RES MFILM 470R 5% 1/8W	1
R704	J707385P104	RES MFILM 100K 5% 1/8W	1
R705	J707385P273	RES MFILM 27K 5% 1/8W	1
R706	J707385P470	RES MFILM 47R 5% 1/8W	1
R707	J707385P223	RES MFILM 22K 5% 1/8W	1
R708	J707385P182	RES MFILM 1K8 5% 1/8W	1
R709	J707385P122	RES MFILM 1K2 5% 1/8W	1
R710	J707385P681	RES MFILM 680R 5% 1/8W	1
R711	J707385P391	RES MFILM 390R 5% 1/8W	1
R712	J707385P181	RES MFILM 180R 5% 1/8W	1
R713	J707385P121	RES MFILM 120R 5% 1/8W	1
R714	J707385P680	RES MFILM 68R 5% 1/8W	1
R715	J707385P820	RES MFILM 82R 5% 1/8W	1
R716	J707385P103	RES MFILM 10K 5% 1/8W	1
R717	J707385P222	RES MFILM 2K2 5% 1/8W	1
R802	J707385P222	RES MFILM 2K2 5% 1/8W	1
R803	J707385P103	RES MFILM 10K 5% 1/8W	1
R804	J707385P474	RES MFILM 470K 5% 1/8W	1

CIRCUIT POSITION	COMPONENT ITEM NUMBER	COMPONENT DESCRIPTION	QUANTITY
R805	J707385P222	RES MFILM 2K2 5% 1/8W	1
R806	J707385P223	RES MFILM 22K 5% 1/8W	1
R807	J707385P563	RES MFILM 56K 5% 1/8W	1
R808	J707385P472	RES MFILM 4K7 5% 1/8W	1
R809	J707385P562	RES MFILM 5K6 5% 1/8W	1
R810	J707385P392	RES MFILM 3K9 5% 1/8W	1
R811	J707385P123	RES MFILM 12K 5% 1/8W	1
R812	J707478P8	RES VAR 4,7K 25% 0,05W	1
R813	J707385P123	RES MFILM 12K 5% 1/8W	1
R814	J707385P184	RES MFILM 180K 5% 1/8W	1
R815	J707385P823	RES MFILM 82K 5% 1/8W	1
R816	J707385P124	RES MFILM 120K 5% 1/8W	1
R817	J707385P683	RES MFILM 68K 5% 1/8W	1
R818	J707476P58	RES DEPC 560K 10% 1/10W	1
R819	J707385P224	RES MFILM 220K 5% 1/8W	1
R820	J707385P154	RES MFILM 150K 5% 1/8W	1
R822	J707385P103	RES MFILM 10K 5% 1/8W	1
R824	J707478P6	RES VAR 2,2K OHM 0,05W	1
R825	J707385P220	RES MFILM 22R 5% 1/8W	1
R826	J707385P223	RES MFILM 22K 5% 1/8W	1
R827	J707385P471	RES MFILM 470R 5% 1/8W	1
R828	J707385P223	RES MFILM 22K 5% 1/8W	1
R829	J707385P103	RES MFILM 10K 5% 1/8W	1
R830	J707385P223	RES MFILM 22K 5% 1/8W	1
R901	J707385P223	RES MFILM 22K 5% 1/8W	1
R902	J707385P223	RES MFILM 22K 5% 1/8W	1
R903	J707385P183	RES MFILM 18K 5% 1/8W	1
R904	J707385P333	RES MFILM 33K 5% 1/8W	1
R906	J707385P823	RES MFILM 82K 5% 1/8W	1
R907	J707385P223	RES MFILM 22K 5% 1/8W	1
R908	J707385P153	RES MFILM 15K 5% 1/8W	1
R910	J707385P104	RES MFILM 100K 5% 1/8W	1
R911	J707385P393	RES MFILM 39K 5% 1/8W	1
R912	J707385P393	RES MFILM 39K 5% 1/8W	1
R913	J707385P223	RES MFILM 22K 5% 1/8W	1
R914	J707385P472	RES MFILM 4K7 5% 1/8W	1
R915	J707385P103	RES MFILM 10K 5% 1/8W	1
R916	J707385P103	RES MFILM 10K 5% 1/8W	1
R917	J707385P271	RES MFILM 270R 5% 1/8W	1
R918	J707385P271	RES MFILM 270R 5% 1/8W	1
R919	J707385P222	RES MFILM 2K2 5% 1/8W	1
R920	J707385P223	RES MFILM 22K 5% 1/8W	1
R921	J707385P103	RES MFILM 10K 5% 1/8W	1
R922	J707476P51	RES DEPC 150K 5% 1/10W	1
R923	J707385P105	RES MFILM 1M0 10% 1/8W	1
R924	J707385P101	RES MFILM 100R 5% 1/8W	1
R925	J707385P910	RES MFILM 1R0 20% 1/8W	1
R926	J707385P223	RES MFILM 22K 5% 1/8W	1
R927	J707385P104	RES MFILM 100K 5% 1/8W	1
R928	J707385P104	RES MFILM 100K 5% 1/8W	1
R929	J707385P154	RES MFILM 150K 5% 1/8W	1
* R930	* J707385P222	* RES MFILM 2K2 5% 1/8W	* 1
* R931	* J707385P122	* RES MFILM 1K2 5% 1/8W	* 1

CIRCUIT POSITION	COMPONENT ITEM NUMBER	COMPONENT DESCRIPTION	QUANTITY
U701	J707451P1	IC LIN AF-AMP 820	1
U702	J707434P1	IC DIG MUX 4051 CMOS	1
U801	J707450P1	IC LIN OP-AMP 358	1
U901	J708785P1	IC DIG CNTR PC 74HC4060	1
U902	J708786P1	IC DIG GATE PC 74 HC 132	1
U903	J708165P4	IC LIN OP-AMP LM 358	1
U904	J708787P1	IC DIG DECO PC 74 HC 138	1
U905	J708789P1	IC DIG FF-D PC 74 HC 173	1
U906	J708789P1	IC DIG FF-D PC 74 HC 173	1
U907	J708788P1	IC DIG MUX PC 74 HC 151	1
U908	J708789P1	IC DIG FF-D PC 74 HC 173	1
U909	J708789P1	IC DIG FF-D PC 74 HC 173	1
U910	J708789P1	IC DIG FF-D PC 74 HC 173	1
U911	J708790P1	IC DIG LTH PC 74 HC 259	1
U912	J708789P1	IC DIG FF-D PC 74 HC 173	1
U913	J708430P2	IC DIG LCD 2112	1
U914	J708790P3	IC DIG LTH PC 74 HC 573	1
0002	M------P1R1 * *	BD PW., REVISION NO.: 1	(1)
U001 :	M905910G1 :	INT CKT, PU 4001 ASM :	
C101	J707438P14	CAP CER CL2 10N 10% 50V	1
C102	J707438P26	CAP CER CL2 100N 10% 50V	1
C103	J707438P26	CAP CER CL2 100N 10% 50V	1
C104	J707438P26	CAP CER CL2 100N 10% 50V	1
D101	J707390P1	DIO SI SIG BAV 74	1
D102	J707390P1	DIO SI SIG BAV 74	1
D103	J707390P1	DIO SI SIG BAV 74	1
D104	J707390P1	DIO SI SIG BAV 74	1
D105	J707390P1	DIO SI SIG BAV 74	1
D106	J707390P1	DIO SI SIG BAV 74	1
D107	J707390P1	DIO SI SIG BAV 74	1
Q101	J707387P1	TSTR PNP SI BCW 30	1
U001	M9-----G1R0	INT CKT (THK.FLM),REV.NO.:0	1
U101	J708468P2	IC UP 8-BIT, 80C39	1
U102	J707243P3	IC DIG REG 4035	1
U103	J708790P2	IC DIG LTH PC 74 HC 75	1
U104	J708790P2	IC DIG LTH PC 74 HC 75	1
U105	J708786P2	IC DIG GATE PC 74 HC 00	1
X101	J708838P28	IC SOCKET 28 CKT (F. PROGRAM - PROM)	1
0004	J709019P1	TAPE PYES TRPT 0.17X44.0	0,04380M

CIRCUIT POSITION	COMPONENT ITEM NUMBER	COMPONENT DESCRIPTION	QUANTITY
U002 :	M905912G1 :	INT CKT, TQ 4009 ASM :	
C101	J707438P14	CAP CER CL2 10N 10% 50V	1
C102	J707438P10	CAP CER CL2 4N7 10% 50V	1
C103	J707438P5	CAP CER CL2 1N 10% 50V	1
C104	A700045P6	CAP TA SOL 1U0 20% 10V	1
C105	J707438P26	CAP CER CL2 100N 10% 50V	1
C106	J707438P26	CAP CER CL2 100N 10% 50V	1
C107	J707363P4	CAP CER NPO 220P 2% 50V	1
C108	J707363P7	CAP CER NPO 470P 2% 50V	1
C109	A700045P7	CAP TA SOL 2U2 20% 10V	1
C110	J707438P26	CAP CER CL2 100N 10% 50V	1
C111	J707438P26	CAP CER CL2 100N 10% 50V	1
U001	M9-----G1R1 * *	INT CKT,THK-FLM ,REVISION 1	1
U101	J707859P1	IC LIN OP-AMP 4558	1
U102	J707859P1	IC LIN OP-AMP 4558	1
U103	B801180G1	INT CKT CUST DTD	1
U104	B801180G1	INT CKT CUST DTD	1
U105	J708791P1	IC DIG BUFR 74HC367	1
U106	J707859P1	IC LIN OP-AMP 4558	1

Storno

MICROCONTROLLER MODULE PU4001

PU4001 is a universal programmable microcomputer, integrate part of the control logic board CL4003.
PU4001 is a hybrid thickfilm microcontroller module based on a CMOS 8-bit singlechip microprocessor 80C39 with external program memory. The module contains a socket for the program memory PROM plus the necessary interfacing circuitry.
A circuit controls ON/OFF operation of the microprocessor.

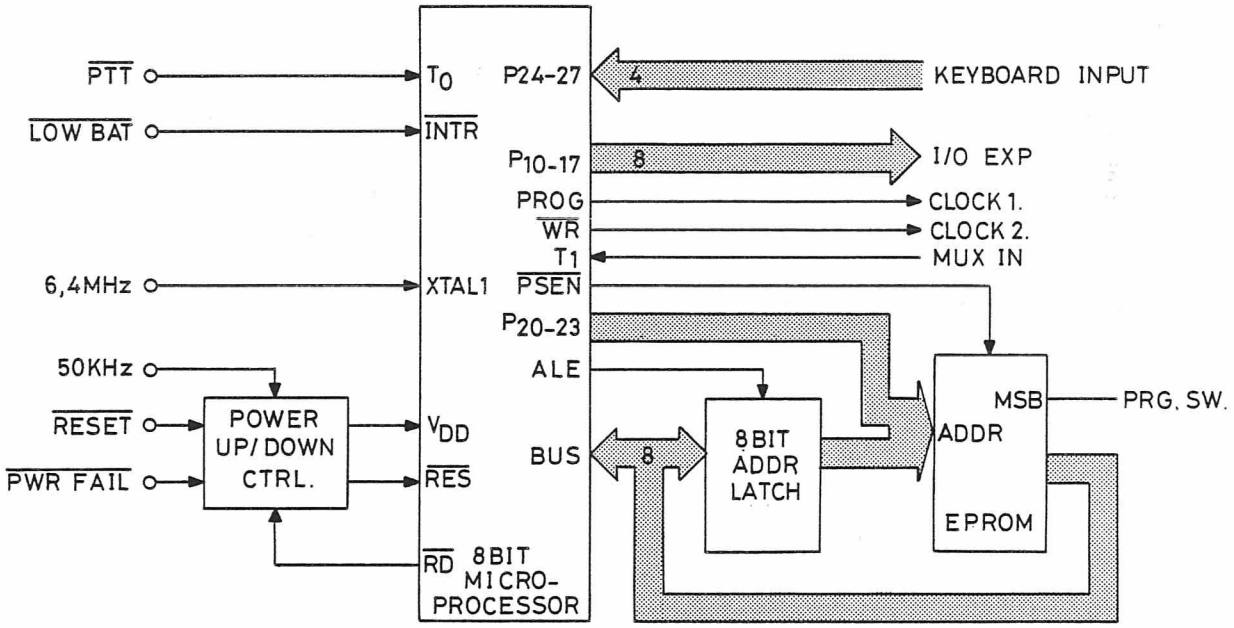

BLOCK DIAGRAM PU4001
D404.010

CIRCUIT DESCRIPTION

MICROPROCESSOR U101

The 80C39 microprocessor uses the 6.4 MHz crystal oscillator situated on the RF board.

All timing and logical functions are processed by the software program except for power-up/down operation:

See Block Diagram D402..940/3.

EXTERNAL PROGRAM MEMORY XU101

XU101 is an 8K x 8 bit EPROM. It is divided into two separate memory banks, each 4K x 8 bit. The selection of each memory is made by a switch via the test connector.
Bank 0 (the lower) is reserved for the operational software while bank 1 is reserved for a standard program package designed for test and service support (see chapter: Test and service software).
All personality data related to the individual customer (RF-frequency codes, tone frequency, telegram specification .....) are programmed as a part of the operational software in the EPROM.

POWER CONTROL U102

The power-up/down is controlled by a bidirectional shift register, which is clocked by 50 kHz derived directly from 6.4 MHz.
The circuit assures maintenance of the RAM contents.

The flip-flop (U105b+c) gives the shift direction, partly hardware controlled and partly controlled by the microprocessor software.

INPUT/OUTPUT LINES

The microprocessor has 27 lines for input/output functions.

- Interface to external memory
  DB0-DB7 (port 0) and P20 to P23 (lower half port 2)
- Keyboard input
  P24-P27 (upper half port 2)
- To output expansion system
  P10-P17 (port 1) with two signal lines Prog (pin 43) and WR (pin 28)
- To input expansion system
  P10-P13 (lower half port 1) with one test input T1 (pin 16)
- Specific input signals
  T0 (pin 18) and RD (pin 26)

SPECIFICATIONS

INTERFACE TO CL-BOARD

Power supply
Vcc 1 pin 24
Current consumption: 5.5V ± 0.25V
> 6mA, typ. 4
Vcc 2 pin 16
Current consumption: 5.0V ± 0.25V
active: < 10mA typ. 5
passive: < 20uA typ. 1u (NEC)
< 200uA typ. 10u (OKI)

DIGITAL

P10-17 Output pin 20-23 and 25-28
Uoh > 2.4V, Ioh=-50uA
Uol < 0.45V, Iol=2.0mA

Prog. Output pin 29
Uoh > 2.4V, Ioh=-100uA
Uol < 0.45V, Iol=2.0mA

WR Output pin 7
Uoh > 2.4V, Ioh=-20uA (100k pull up)
Uol < 1.0V, Iol=20uA

P24-27 Input pin 1-3-5-4
Uih > 3V/Ii/< 500uA
Uil < 0.3V

PTT Input pin 14
Uih > 3V
Uil < 0.8V/I1/< 1.0mA

LOW BAT. Input pin 10
Uih > 3V
Uil < 0.8V/Ii/< 10uA

6.4 MHz Input pin 17
Uih > 4V
Uil < 0.8V/Ii/< 1uA

50 kHz Input pin 18
Std. CMOS

RESET Input pin 11
Std. CMOS

HOLD Output pin 9
Std. CMOS

ENAOUT Output pin 19
Std. CMOS

PWR FAIL Input
Uih > 3V CMOS input
Uil < 1.0V Iin max. 6uA
CMOS input + 100 kOhm pull-up

PRG. SW Input pin 13
Uih > 5V/n.c.
Uil < 1V/Ii/< 0.5mA

Storno

Storno

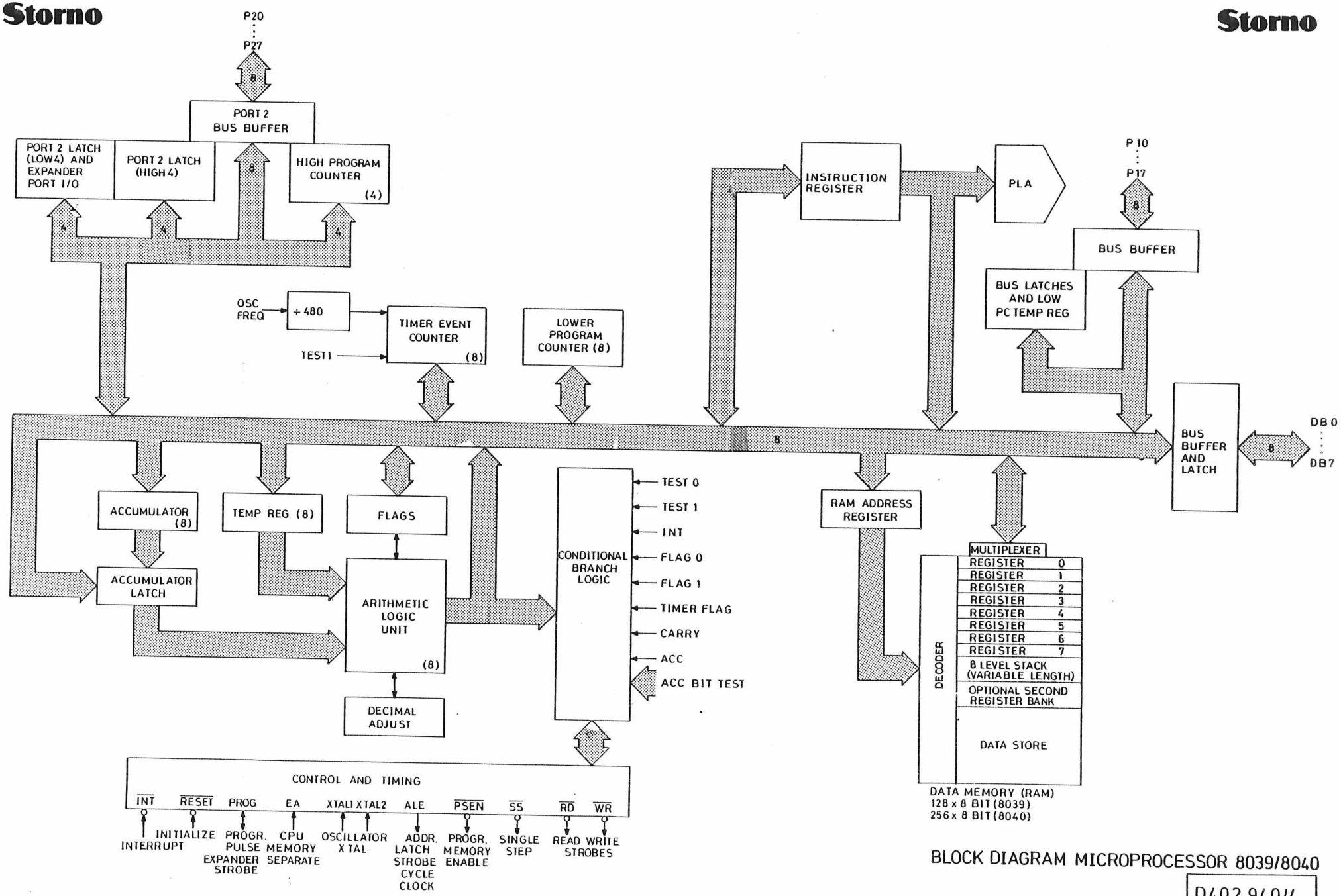

BLOCK DIAGRAM MICROPROCESSOR 8039/8040

D402.940/4

Storno

Storno

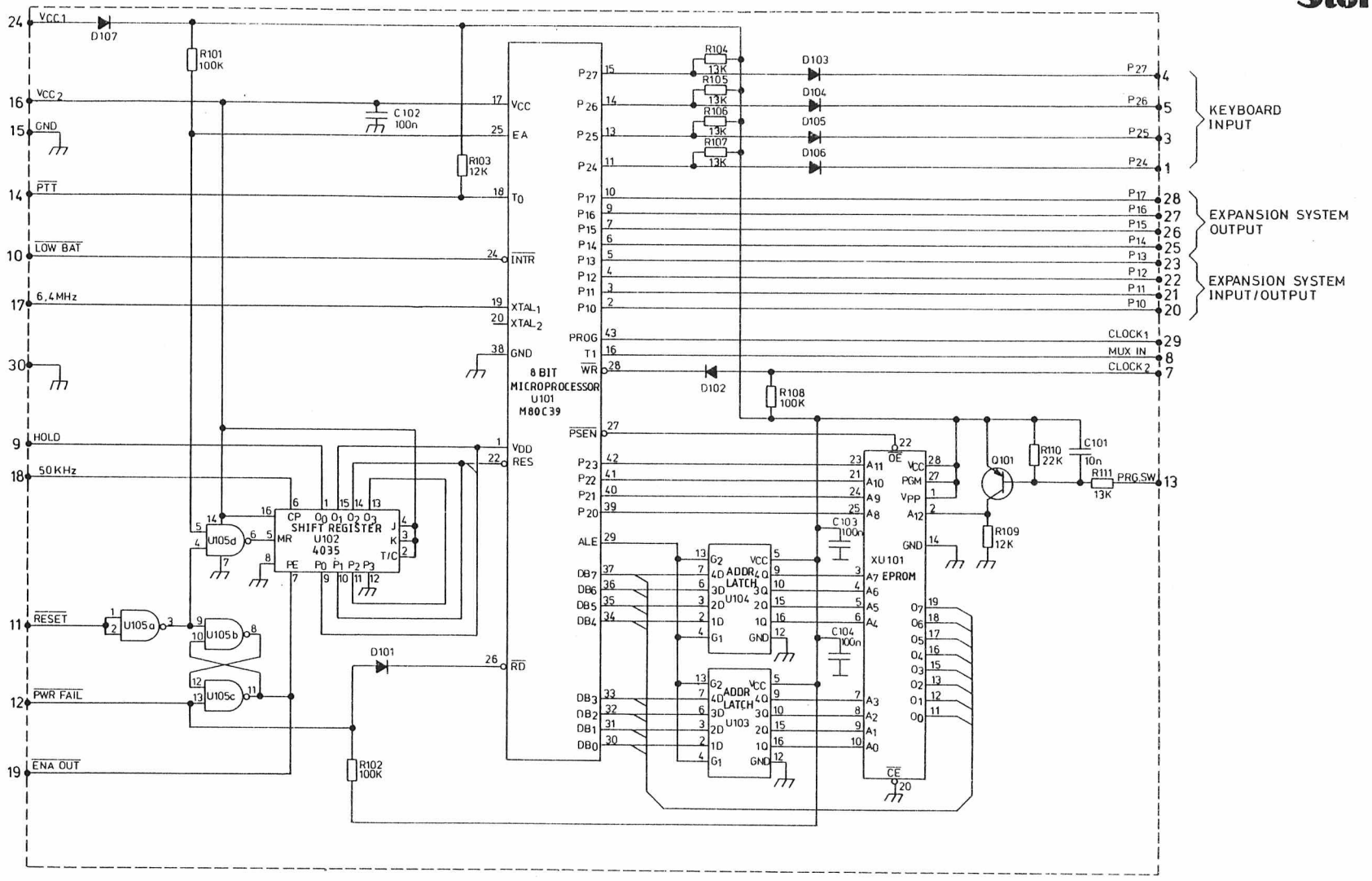

NOTE: ALL RESISTORS IN THIS CIRCURT, ARE INTEGRATED IN THE HYBRID THICK FILM LAYOUT.

MICROCONTROLLER SUB. MODULE PU4001

CODE NO. M905910G1 | D404.006

ITEM NUMBER DESCRIPTION

M905910G1 INT CKT ASM FOR PU 4001

P A R T S L I S T :

	CIRCUIT POSITION		COMPONENT ITEM NUMBER		COMPONENT DESCRIPTION		QUANTITY
	C101		J707438P14 *	*	CAP CER CL2 10N 10% 50V		1
	C102		J707438P26		CAP CER CL2 100N 10% 50V		1
	C103		J707438P26		CAP CER CL2 100N 10% 50V		1
	C104		J707438P26		CAP CER CL2 100N 10% 50V		1
	D101		J707390P1		DIO SI SIG BAV 74		1
	D102		J707390P1		DIO SI SIG BAV 74		1
	D103		J707390P1		DIO SI SIG BAV 74		1
	D104		J707390P1		DIO SI SIG BAV 74		1
	D105		J707390P1		DIO SI SIG BAV 74		1
	D106		J707390P1		DIO SI SIG BAV 74		1
	D107		J707390P1		DIO SI SIG BAV 74		1
	Q101		J707387P1		TSTR PNP SI BCW 30		1
*	R112	*	J706035P34	*	RES DEPC 4K7 5% 0.1W	*	1
*	R113	*	J707385P822	*	RES MFILM 8K2 5% 1/8W	*	1
	U001		M905909G1		INT CKT, THK-FLM		1
	U101		J708468P2		IC UP 8-BIT, 80C39 CMOS		1
	U102		J707243P3		IC DIG REG 4035 CMOS		1
	U103		J708790P2		IC DIG LTH PC 74 HC 75		1
	U104		J708790P2		IC DIG LTH PC 74 HC 75		1
	U105		J708786P2		IC DIG GATE PC 74 HC 00		1
	X101		J708838P28		IC SOCKET 28 CKT (F. PROGRAM - PROM)		1
	0004		J709019P1		TAPE PYES TRPT 0.17X44.0		0,04380M

CHAPTER 7
ACCESSORIES
AND
MODULES

- MISCELLANEOUS
- BU4001/BU4002 BATTERIES
- CP4001 CONTROL PANEL, 2/10 CHANNELS VERSION
- CP4002 CONTROL PANEL, AUTOMATIC VERSION
- CU4001/CU4002 BATTERY CHARGERS
- SE4002 TEST ADAPTOR
- SE4005 SERVICE EQUIPMENT

Si4001

MISCELLANEOUS

ANTENNAS

Whip antenna AN4661

This antenna is for the frequency band 400-470 MHz.

Rubber antenna AN4xx2

The AN4112 is a wide band conductive rubber antenna.

AN4332 is a rubber antenna existing in two versions: AN4332-L (low band) for 68-76 MHz and AN4332-H (high band) for 75-88 MHz.

Preadjusted, resonant helical antenna AN4xx3

This antenna exists in five versions, A to E, fitted for five sub-bands in the 146 to 174 MHz frequency range.

The adjustment to the sub-band is done by cutting the length.

SUB-BAND DESIGNATION	RANGE MHz
A	145-155
B	150-160
C	155-165
D	160-170
E	165-175

OTHER ACCESSORIES

Carrying strap CK4003

The carrying strap is delivered as a kit containing:

1. Strap (leather)
2. Buckles
4. Clamps
1. Shoulder protector

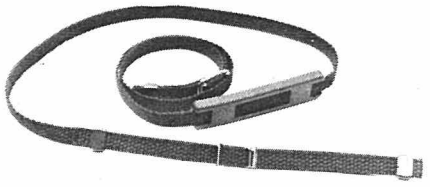

It is possible to cut the strap to any length and therefore to use it as a wrist-strap.

Carrying cases CK4004 and CK4005

The two carrying cases are in black leather. CK4004 is for the BU4001 battery version of the CQP4000 and CK4005 is for a CQP4000 with BU4002.

The display and the keypad are accessible through a transparent window in the case as well as there are four rows of holes for the loudspeaker. A separate flap allows the battery to be chaged without removing the radio from the case.

The carrying cases may be used together with the carrying strap.



Belt retainer CK4006.

In order to fasten the belt retainer a special plast cabinet, CA4002/CA4004, must be ordered. The retainer consists of a bracket to mount on CA4002/CA4004 and a leather ring with a swivel lock.
With the belt loop in position the radio shoe is pushed upside down into the receiver, turned 180° where it locks and cannot be removed unless you reverse the procedure.

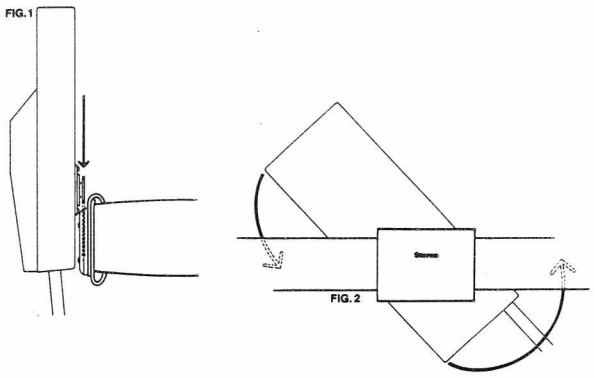

Belt clip CK4007.

To fasten the belt clip the special plast cabinet, CA4002/CA4004, must be ordered. The clip is made of stainless steel. It has a shoe which locks into the receiver mounted on the back of the radio

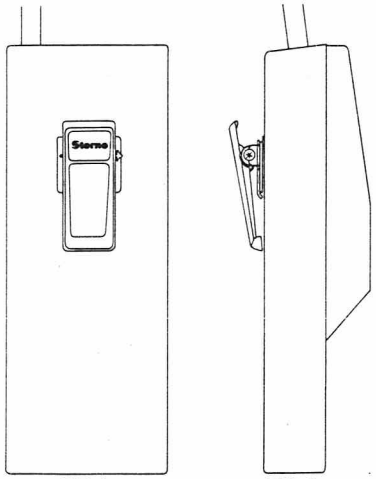

Battery tester SI4001

The battery tester is based on mechanical parts used for the radio-package.
A moving-coil instrument is placed in the front part, in the area normally used for the key-pad.
The battery is placed in the battery compartment.
When the button on the left side (normally used for PTT) is depressed, the battery is loaded corresponding to the 2 W transmitter and the instrument will show the charge-condition.



Display and keypad cover

A plastic cover to protect the display and keypad from being scratched by tools, etc. is available.

BU4001/BU4002

BATTERIES

The battery unit BU4001/BU4002 is intended for use in STORNOPHONE 4000 radiotelephones.

The battery pack consists of 2 moulded plastic parts, contact-strips and 6 NiCd-cells connected in serie.
2 sizes of batteries are provided as options. A 450 mAh battery and a larger, 750 mAh battery. The nominal battery voltage is 7.2 V. The batteries are provided with two sets of terminals, one set in the top giving the supply to the radio and one set in the back for charging purposes. The charge - terminals are short circuit protected by means of a diode mounted in the battery. This enables the unit to be charged separately or when in the radio.

Because of the big area of the charging terminals, a diode is connected between the positive terminal and the battery in order to avoid short-circuits when handling the battery. Furthermore, because the battery shall supply the charging unit in case of mains drop-out, a 470 ohm resistor is coupled parallel to the diode.
The third terminal (in the middle) of the charging inlet is designed for another version of the battery.

NOTE:
A new battery may not reach full capacity until it has been charged/discharged 2 to 3 times.

After a longer period of storing, the capacity of the battery can be lower than its nominal capacity.
The battery must be started up, i.e. used with a few full charge/deep discharge cycles. Using the battery with full charge/deep discharge cycles from time to time will avoid storage and memory effects. A deep discharge corresponds to 6 V.

BU4001, 450 mAh

The operating time for a fully recharged battery is shown below (100% of nominal capacity):

Duty cycle %			Oper.+	Standard type 2 & 10 ch.		Automatic type	
Transm.	Receive	Stand-by	time	1 W	2 W	1 W	2 W
2	5	93	Hrs	10.7 (10.0)	8.9 (8.1)	8.7	7.6
5	5	90	Hrs	8.4 (8.0)	6.1 (5.5)	7.3	5.6
5	10	85	Hrs	7.7 (7.3)	5.7 (5.2)	6.8	5.3
10	5	85	Hrs	6.3 (6.0)	4.0 (3.6)	5.7	3.9
10	10	80	Hrs	5.3 (5.6)	3.8 (3.5)	5.4	3.8

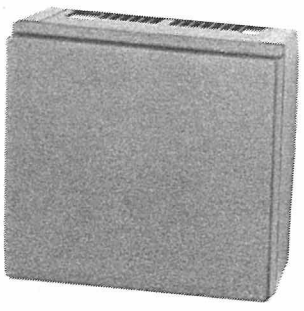

+Values shown for VHF. UHF values approx. 7% lower.
Values in brackets: Current save circuit being blocked

BU4002, 750 mAh

The operating time for a fully recharged battery is shown below (100% of nominal capacity):

Duty cycle %			Oper.+	Standard type 2 & 10 ch.		Automatic type	
Transm.	Receive	Stand-by	time	1 W	2 W	1 W	2 W
2	5	93	Hrs	17.1 (16.7)	15.0 (13.6)	14.4	12.6
5	5	90	Hrs	14.1 (13.3)	10.3 (9.3)	12.1	9.3
5	10	85	Hrs	12.9 (12.2)	9.6 (8.7)	11.3	8.9
10	5	85	Hrs	10.4 (9.9)	6.7 (6.0)	9.6	6.5
10	10	80	Hrs	9.8 (9.4)	6.4 (5.8)	9.1	6.3

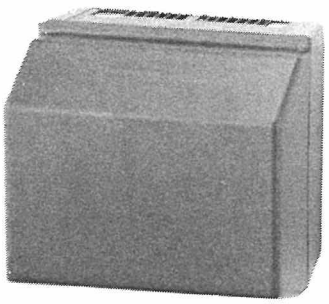

+Values shown for VHF. UHF values approx. 7% lower.
Values in brackets: Current save circuit being blocked.

TECHNICAL SPECIFICATIONS

BU4001

Capacity:
450 mAh nominal at 25°C.

Voltage:
7.2 V nominal at 25°C.

Charging current:
Max. 135 mA.

Charging temperature:
10 to 45°C.

Discharge temperature:
-25 to +60°C.

Storage temperature:
-40 to +60°C.

Internal resistance at 25°C:
DC resistance: 0.4 ohm max
AC resistance: 0.3 ohm max.

Dimensions
Length: 67.2 mm
Width: 67.4 mm
Height: 21.0 mm

Weight
150 g

BU4002

Capacity:
750 mAh nominal at 25°C.

Voltage:
7.2 V nominal at 25°C.

Charging current:
Max. 250 mA.

Charging temperature:
10 to 45°C.

Discharge temperature:
-25 to +60°C.

Storage temperature:
-40 to +60°C.

Internal resistance at 25°C:
DC resistance: 0.225 ohm max
AC resistance: 0.17 ohm max.

Dimensions
Length: 67.2 mm
Width: 67.4 mm
Height: 36.5 mm

Weight
220 g

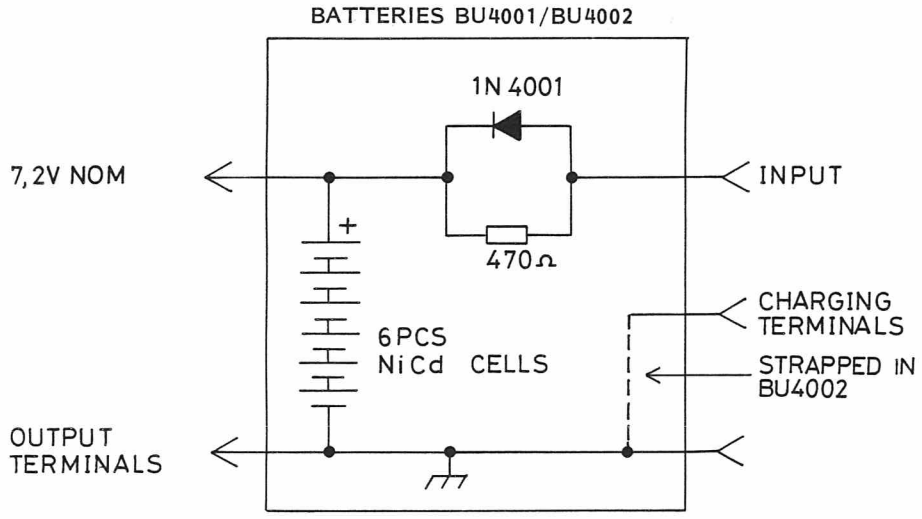

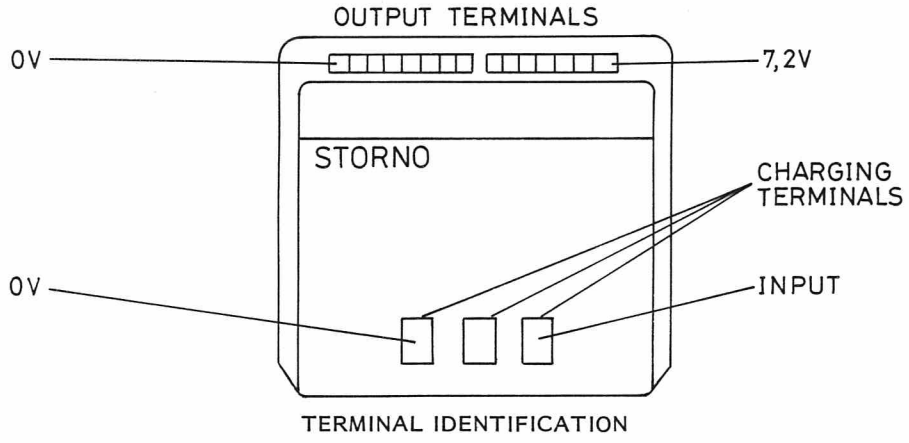

TERMINAL IDENTIFICATION

BU4001/BU4002

D403.315/3

Storno

BU4001/BU4002

BATTERIES

The battery unit BU4001/BU4002 is intended for use in STORNOPHONE 4000 radiotelephones.

The battery pack consists of 2 moulded plastic parts, contact-strips and 6 NiCd-cells connected in serie.
2 sizes of batteries are provided as options. A 450 mAh battery and a larger, 750 mAh battery. The nominal battery voltage is 7.2 V.
The batteries are provided with two sets of terminals, one set in the top giving the supply to the radio and one set in the back for charging purposes. The charge - terminals are short circuit protected by means of a diode mounted in the battery. This enables the unit to be charged separately or when in the radio.

Because of the big area of the charging terminals, a diode is connected between the positive terminal and the battery in order to avoid short-circuits when handling the battery. Furthermore, because the battery shall supply the charging unit in case of mains drop-out, a 470 ohm resistor is coupled parallel to the diode.
The third terminal (in the middle) of the charging inlet is designed for another version of the battery.

NOTE:
A new battery may not reach full capacity until it has been charged/discharged 2 to 3 times.

After a longer period of storing, the capacity of the battery can be lower than its nominal capacity.
The battery must be started up, i.e. used with a few full charge/deep discharge cycles. Using the battery with full charge/deep discharge cycles from time to time will avoid storage and memory effects. A deep discharge corresponds to 6 V.

BU4001, 450 mAh

The operating time for a fully recharged battery is shown below (100% of nominal capacity):

Duty cycle %			Oper.+	Standard type 2 & 10 ch.		Automatic type	
Transm.	Receive	Stand-by	time	1 W	2 W	1 W	2 W
2	5	93	Hrs	10.7 (10.0)	8.9 (8.1)	8.7	7.6
5	5	90	Hrs	8.4 (8.0)	6.1 (5.5) [1)]	7.3	5.6
5	10	85	Hrs	7.7 (7.3)	5.7 (5.2)	6.8	5.3
10	5	85	Hrs	6.3 (6.0)	4.0 (3.6)	5.7	3.9
10	10	80	Hrs	5.3 (5.6)	3.8 (3.5)	5.4	3.8

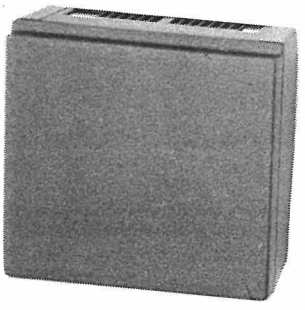

+Values shown for VHF. UHF values approx. 7% lower.
Values in brackets: Current save circuit being blocked

1) Value for binary version: 5,6

BU4002, 750 mAh

The operating time for a fully recharged battery is shown below (100% of nominal capacity):

Duty cycle %			Oper.+	Standard type 2 & 10 ch.		Automatic type	
Transm.	Receive	Stand-by	time	1 W	2 W	1 W	2 W
2	5	93	Hrs	17.1 (16.7)	15.0 (13.6)	14.4	12.6
5	5	90	Hrs	14.1 (13.3)	10.3 (9.3) 1)	12.1	9.3
5	10	85	Hrs	12.9 (12.2)	9.6 (8.7)	11.3	8.9
10	5	85	Hrs	10.4 (9.9)	6.7 (6.0)	9.6	6.5
10	10	80	Hrs	9.8 (9.4)	6.4 (5.8)	9.1	6.3

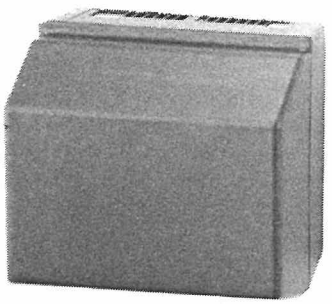

+Values shown for VHF. UHF values approx. 7% lower.
Values in brackets: Current save circuit being blocked.

1) Value for binary version: 9,4

TECHNICAL SPECIFICATIONS

BU4001

Capacity:
450 mAh nominal at 25°C.

Voltage:
7.2 V nominal at 25°C.

Charging current:
Max. 135 mA.

Charging temperature:
10 to 45°C.

Discharge temperature:
-25 to +60°C.

Storage temperature:
-40 to +60°C.

Internal resistance at 25°C:
DC resistance: 0.4 ohm max
AC resistance: 0.3 ohm max.

Dimensions
Length: 67.2 mm
Width: 67.4 mm
Height: 21.0 mm

Weight
150 g

BU4002

Capacity:
750 mAh nominal at 25°C.

Voltage:
7.2 V nominal at 25°C.

Charging current:
Max. 250 mA.

Charging temperature:
10 to 45°C.

Discharge temperature:
-25 to +60°C.

Storage temperature:
-40 to +60°C.

Internal resistance at 25°C:
DC resistance: 0.225 ohm max
AC resistance: 0.17 ohm max.

Dimensions
Length: 67.2 mm
Width: 67.4 mm
Height: 36.5 mm

Weight
220 g

Storno

CP4001

CONTROL PANEL

The control panel CP4001 is the interface between the operator and the radio set. It consist of a moulded plastic front which holds the 8 buttons laminated keypad, the display-lense, the loudspeaker and the microphone. All connections are made through three ribbon cables.

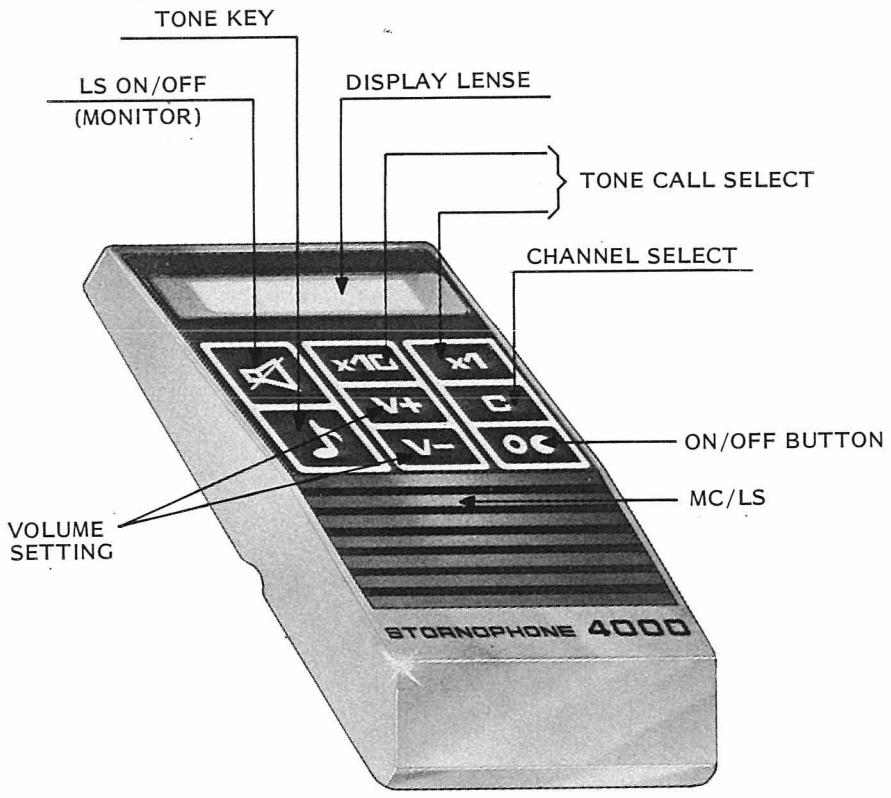

TECHNICAL SPECIFICATIONS

Loudspeaker Impedance
8 ohm nom.

Loudspeaker Power
500 mW

Microphone Impedance (load)
2 Kohm nom. (connected to max. 10 V DC)

Dimensions
Length: 122.5 mm
Width: 67.4 mm
Height: 25.0 mm

Weight
90 g

Storno

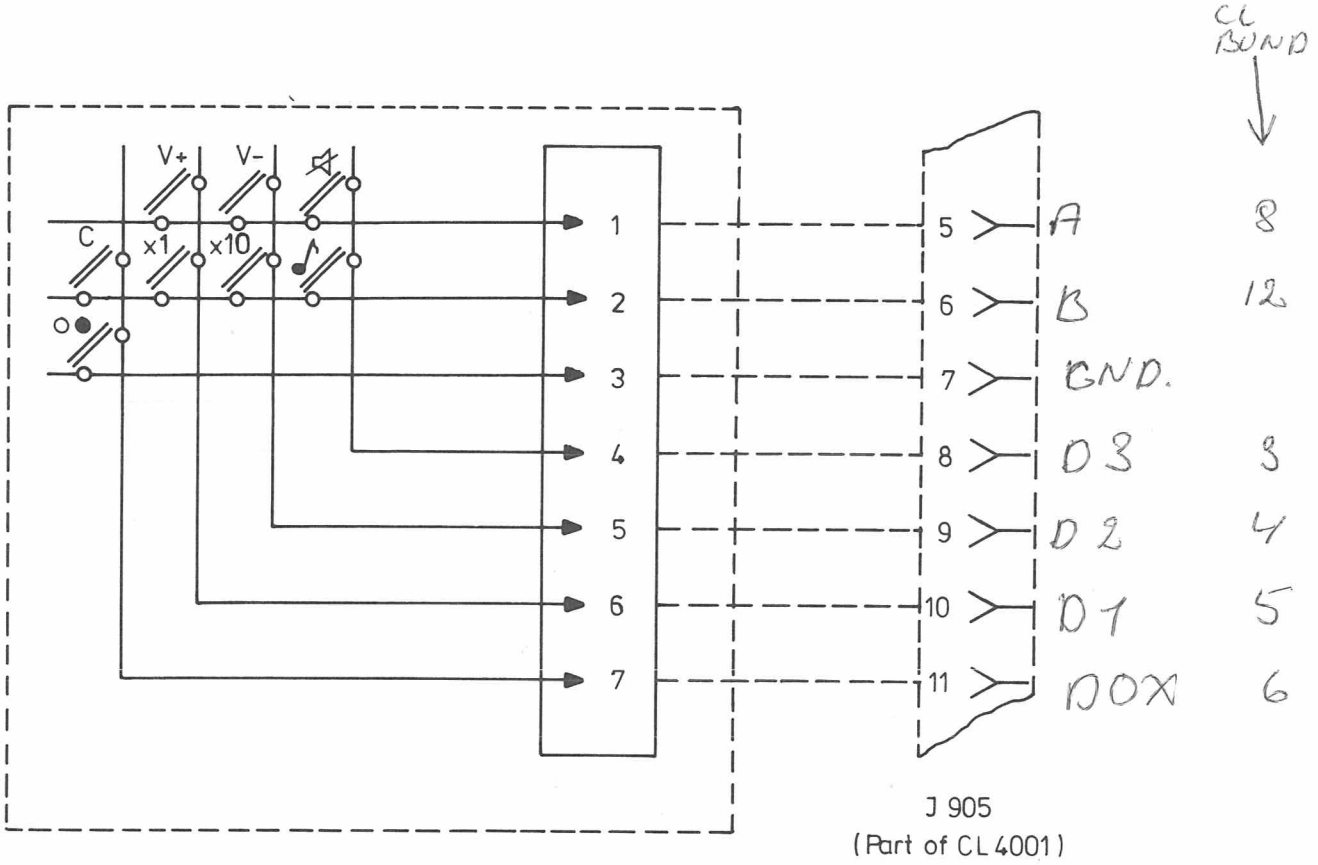

J 905
(Part of CL 4001)

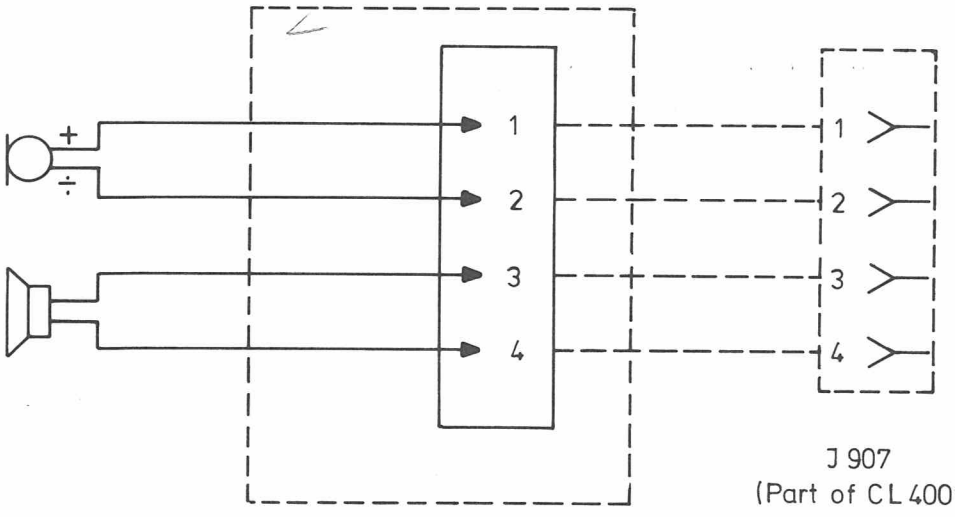

J 907
(Part of CL 4001)

ITEM NUMBER	DESCRIPTION
L855355G1	CONTROL PANEL CP4001

P A R T S L I S T :

CIRCUIT POSITION	COMPONENT ITEM NUMBER	COMPONENT DESCRIPTION	QUANTITY TOTAL
	A700007P13	CAP CER NPO 10P 5% 50V	1
	A701301P2	MIKE	1
	J706863P1	FILTER	1
	J707235P1	GSKT,MIKE	1
	J707407P1	LS	1
	K805349G1	COV ASM	1
	K805301P1	LENS	1
	K805350G1	COV METALL ASM	1
	M905407P1	KEYBOARD OVERLAY	1
	L855350P1	LOCK RING	1
	L855396P1	CPNT BD FLEX	1
	M905459P1	GRL MLD	1

ITEM NUMBER	DESCRIPTION
L855355G1	CONTROL PANEL CP4001

P A R T S L I S T :

CIRCUIT POSITION	COMPONENT ITEM NUMBER	COMPONENT DESCRIPTION	QUANTITY TOTAL
	A700007P13	CAP CER NPO 10P 5% 50V	1
	A701301P2	MIKE	1
	J706863P1	FILTER	1
	J707235P1	GSKT,MIKE	1
	J707407P1	LS	1
	K805349G1	COV ASM	1
	K805301P1	LENS	1
	K805350G1	COV METALL ASM	1
	M905407P1	KEYBOARD OVERLAY	1
	L855350P1	LOCK RING	1
	L855396P1	CPNT BD FLEX	1
	M905459P1	GRL MLD	1

	ITEM NUMBER	DESCRIPTION
	L855355G1	CONTROL PANEL CP4001, F. 2 CH..
*	L855355G2	* CONTROL PANEL CP4001, F. 10 CH..
*	L855355G3	* CONTROL PANEL CP4001, F. 10 CH., TO USA

P A R T S L I S T :

	CIRCUIT POSITION	COMPONENT ITEM NUMBER	COMPONENT DESCRIPTION	QUANTITY TOTAL
	0002	K805349G1	COV ASM F. 2 CH.	1 :F.-G1
	0002	K805349G2	COV ASM F. 10 CH.	1 :F.-G2
*	0002	* K805349G3	* COV ASM F. 10 CH. TO USA	1 :F.-G3
	0003	M905459P1	GRL MLD	1
	0004	J707407P1	LS PERM MAG. 8R0 0.4W	1
	0005	L855350P1	LOCK RING	1
	0006	A701301P2	MICROPHONE CARTRIDGE	1
	0007	J707235P1	GSKT,MIKE	1
	0008	J706863P1	FILTER	1
	0009	L855396P1	CPNT BD FLEX	1
	0010	A700007P13	CAP CER NPO 10P 5% 50V	1

*	0002 :	K805349G1 :	COV ASM F. 2 CH. :	
	0002	K805350G1	COV METALL ASM	1
	0003	M905407P1	KEYBOARD OVERLAY, F. 2 CH.	1
	0004	K805301P1	LENS	1

*	0002 :	K805349G2 :	COV ASM F. 10 CH. :	
	0002	K805350G1	COV METALL ASM	1
	0003	M905407P2	KEYBOARD OVERLAY, F. 10 CH.	1
	0004	K805301P1	LENS	1

*	0002 :	K805349G3 :	COV ASM F. 10 CH., TO USA :	
	0002	K805350G1	COV METALL ASM	1
	0003	M905407P4	KEYBOARD OVERLAY,10 CH. USA	1
	0004	K805301P1	LENS	1

ITEM NUMBER		DESCRIPTION
L855355G1	*	CONTROL PANEL CP4001-EUR.,2 CH. W TONES
L855355G2	*	CONTROL PANEL CP4001-EUR.,10 CH.
L855355G3	*	CONTROL PANEL CP4001-EUR., MARITIME

P A R T S L I S T :

	CIRCUIT POSITION		COMPONENT ITEM NUMBER		COMPONENT DESCRIPTION	QUANTITY TOTAL	
*	C001		A700007P45 *	*	CAP CER NPO 47P 5% 50V	1	
	0002		K805349G1	*	COV ASM F. 2 CH. W. TONES	1	:F.-G1
	OR:						
	0002		K805349G2	*	COV ASM F. 10 CH. W/O TONES	1	:F.-G2
	OR:						
	0002		K805349G3	*	COV ASM F. MARITIME	1	:F.-G3
	0003		M905459P1		GRILL, MOULDED-	1	
	0004	*	J708879P1	*	LS PERM MAG. 8R0 0.15W	1	
	*		*		*	*	
	0006		A701301P2		MICROPHONE CARTRIDGE	1	
	0007		J707235P1		GASKET, MIKE-	1	
	0008		J706863P1		FILTER	1	
	0009	*	L855800P1		CPNT BD., FLEX.-	1	
	*		*		*	*	

/----------/

0002 :	K805349G1 :	*	COV ASM F. 2 CH. W. TONES :		
0002	K805350G1		COV METALL ASM	1	
0003	M905407P1		KEYBOARD OVERLAY, F. 2 CH.	1	
0004	K805301P1		LENS	1	

0002 :	K805349G2 :	*	COV ASM F. 10 CH. W/O TONES :		
0002	K805350G1		COV METALL ASM	1	
0003	M905407P2		KEYBOARD OVERLAY, F. 10 CH.	1	
0004	K805301P1		LENS	1	

0002 :	K805349G3 :	*	COV ASM F. MARITIME :		
0002	K805350G1		COV METALL ASM	1	
0003	M905407P3 *	*	KEYBOARD OVERLAY,F. MARITIME	1	
0004	K805301P1		LENS	1	

Storno

CP4002

CONTROL PANEL

The control panel CP4002 is the interface between the operator and the radio set. CP4002 is used in the CQP4000 Automatic version (with CL4003). It consists of a moulded plastic front which holds the 16 button laminated keypad, the display-lense, the loudspeaker, and the microphone. Electrical connections are made through two flexible tails.

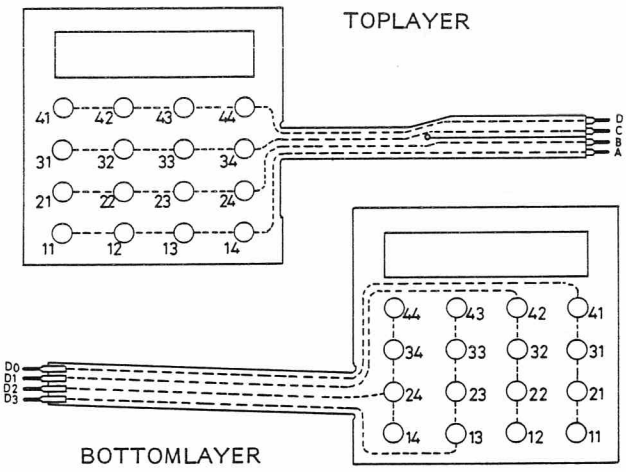

MATRIX TABLE

KEY \ LINE	D	C	B	A	D 0	D 1	D 2	D 3
11				×	×			
12				×		×		
13				×				×
14				×			×	
21			×		×			
22			×			×		
23			×					×
24			×				×	
31		×			×			
32		×				×		
33		×						×
34		×					×	
41	×				×			
42	×					×		
43	×							×
44	×						×	

The control panel consists of a bottom layer and a top layer each equipped with a flexible tail. These tails are connected to the CL-board via J905. By depressing a key a message is sent through the two layers. The bottom layer sends an impulse directly to the microcontroller PU4001 and the top layer sends an impulse to the output expander U905.

The above table shows which lines are activated when depressing a specific key. For instance, if key number 23 is depressed an impulse is sent through pin D3 of the bottom layer via connector J905 and directly to pin 4 af PU4001, and through pin B of the toplayer to pin 4 of the output expander U905.

INTERCONNECTIONS FOR SWITCHES S3 AND S4

The following covers the interconnections between the switches S3 and S4 in CB400x and the CQP4000 Automatic radio.

Keyboard

			a
			b
		d	c

Fig. 1

Function	Lines
a	C/D2
b	B/D2
c	A/D2
d	A/D3

Fig. 2

Four functions from the keyboard positions: a, b, c, and d, can be implemented in the control box, yet only two in the same box.
Fig. 1 shows the position of the functions on the keyboard.

The functions are obtained by connecting the lines from CQP4000 Automatic as shown in fig. 2.

The possible combinations of the functions together with the combination of wires, CB version and group numbers can be seen on diagram D404.008

SPECIFICATIONS

4x4 Matrix contact resistance
$\leq$ 100 Ohm

Loudspeaker Impedance
8 Ohm nom.

Loudspeaker Power
500 mW

Microphone impedance (Load)
2 kOhm nom. connected to max. 10V DC

Output voltage
5 mV RMS nom.

Temperature range
Operation: $-25^{o}C$ to $+60^{o}C$
Storage: $-40^{o}C$ to $+70^{o}C$

Dimensions
Length x Width x Heigth:
122.5 x 67.4 x 25 mm

Weight
90 g

Storno

Storno

J905 (PART) OF CL403)

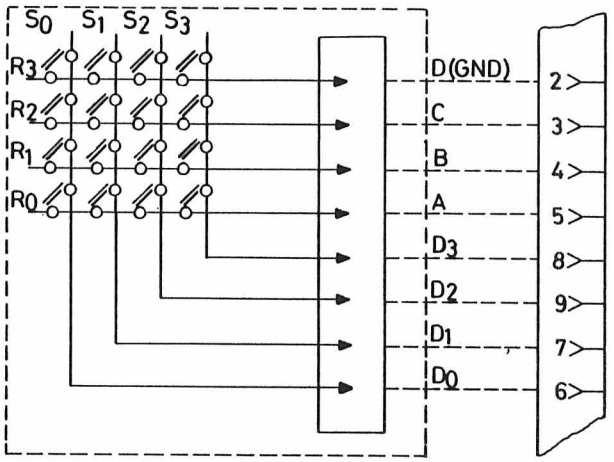

KEYBOARD MATRIX

	S0	S1	S2	S3
R3				⊙●
R2	4	5	6	
R1				
R0	*	0	⌗	

depends on code no. see below

eg: for CP:M906013G5 "S3/R1" gives " ⇄ "

7	8	9	⊙⊙
4	5	6	F
1	2	3	T
*	0	⌗	K

19M906013G1

7	8	9	⊙⊙
4	5	6	DIA
1	2	3	VOL
*	0	⌗	M

19M906013G2

7	8	9	⊙⊙
4	5	6	V+
1	2	3	V-
*	0	⌗	M

19M906013G3

1	2	3	⊙●
4	5	6	VOL
7	8	9	A
*	0	⌗	B

19M906013G4

1	2	3	⊙●
4	5	6	VOL
7	8	9	⇄
*	0	⌗	P

19M906013G5

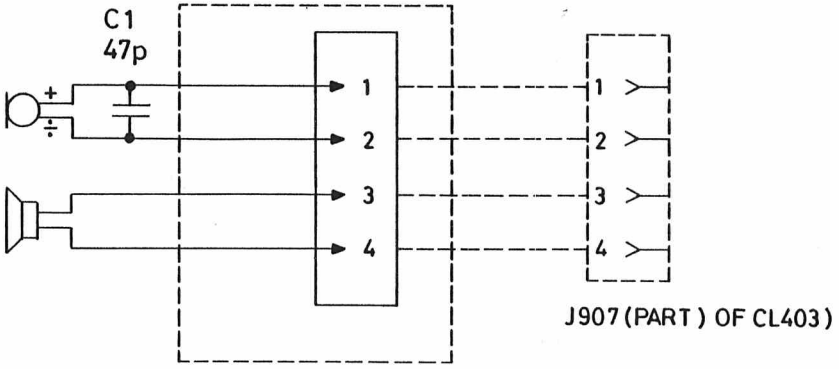

J907 (PART) OF CL403)

CONTROL PANEL CP4002

D404.012/2

	ITEM NUMBER	DESCRIPTION
	M906013G1	CP 4002 ASM., F. S A S
	M906013G2	CP 4002 ASM., F. A F / B A
	M906013G4	CP 4002 ASM., F. GEN. PURP.- 99 CHANN.'S
*	M906013G5 *	CP 4002 ASM., FOR: B R.

P A R T S L I S T :

	CIRCUIT POSITION		COMPONENT ITEM NUMBER		COMPONENT DESCRIPTION	QUANTITY	
	C001		A700007P45 *	*	CAP CER NPO 47P 5% 50V	1	ALL
	0002		K805350G1		COVER ASM., METALLIZED-	1	ALL
	0003		K805301P1		LENS	1	ALL
	0004		M905862P1		KEYBOARD ASM., F.: S A S	1	F.:-G1
	OR:						
	0004		M905862P2		KEYBOARD ASM., F.: A F / B A	1	F.:-G2
	OR:						
	0004		M905862P4		KEYBOARD ASM., F. GEN. PURP.	1	F.:-G4
	OR:						
*	0004	*	M905862P5	*	KEYBOARD ASM., F.: B R. *	1	F.:-G5
	0005		A701301P2		MIKE	1	ALL
	0006		J707235P1		GASKET, MIKE-	1	ALL
	0007		J708879P1		LS, PERM. MAG., 8R0 0.15W	1	ALL
	0008	*	J709325P1	*	GASKET	1	ALL
	0009		M905459P1		GRILL, MOULDED-	1	ALL
	0010		L855800P1		CPNT BD., FLEX.-	1	ALL

Storno

CU4001/CU4002

BATTERY CHARGERS

The CU4001 and CU4002 battery chargers are designed for the NiCd batteries BU4001 (450 mAh) and BU4002 (750 mAh).

The chargers are available in a standard version and UK version with a special mains plug containing fuses.

The chargers provide charging of either the battery alone or when inserted in the radio.

The chargers are fully automatic, and the charging time is approximately:

- o 450 mAh battery - 6 hours
- o 750 mAh battery - 10 hours

A red light emitting diode placed in the cabinet front indicates that the charging unit is connected to mains power supply.

The charging current is 120 mA. After nominal charging time (6 or 10 hours) the charger automatically switches to trickle charge with a charging current of 38 mA, thereby avoiding an overload condition that could damage the battery.

The battery contains a coding terminal, which automatically programs the charger for the right charging time so that the charger need not be adjusted to charge the two different battery types.
CU4001 is designed with two outlets, each provided with two LED-indicators.

- o Yellow LED - charging in process.
- o Green LED - charging finished.

CU4002 is a 6 position unit consisting of the same basic parts as the 2 position charger CU4001. 3 component boards with mains transformer and 3 cabinets are placed side by side on one common bottom plate. The boards are therefore functionally identical to the 2 position charger.

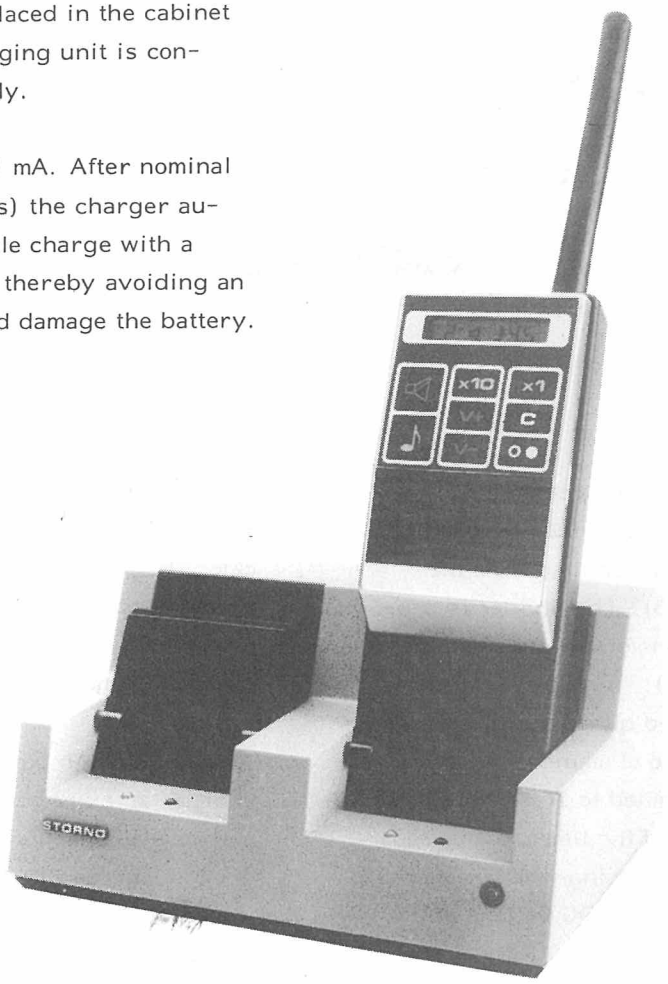

CIRCUIT DESCRIPTION

The charger comprises identical circuits, one for each outlets.
The charging current is a rectified alternating current (100/120 Hz). The output AC voltage from the mains transformer is rectified and fed to the battery through a current limiting circuitry consisting of a zener diode (D201-D301) and a power transistor (Q201-Q301) providing a constant peak voltage drop across two series coupled resistors (R203/211-204, R303/311-304). R204/304 is short circuited during the predetermined periode of quick charging. R203/211, R303/311 thereby determine the quick charge rate. The standby charge rate is determined by the series combination of the three resistors.

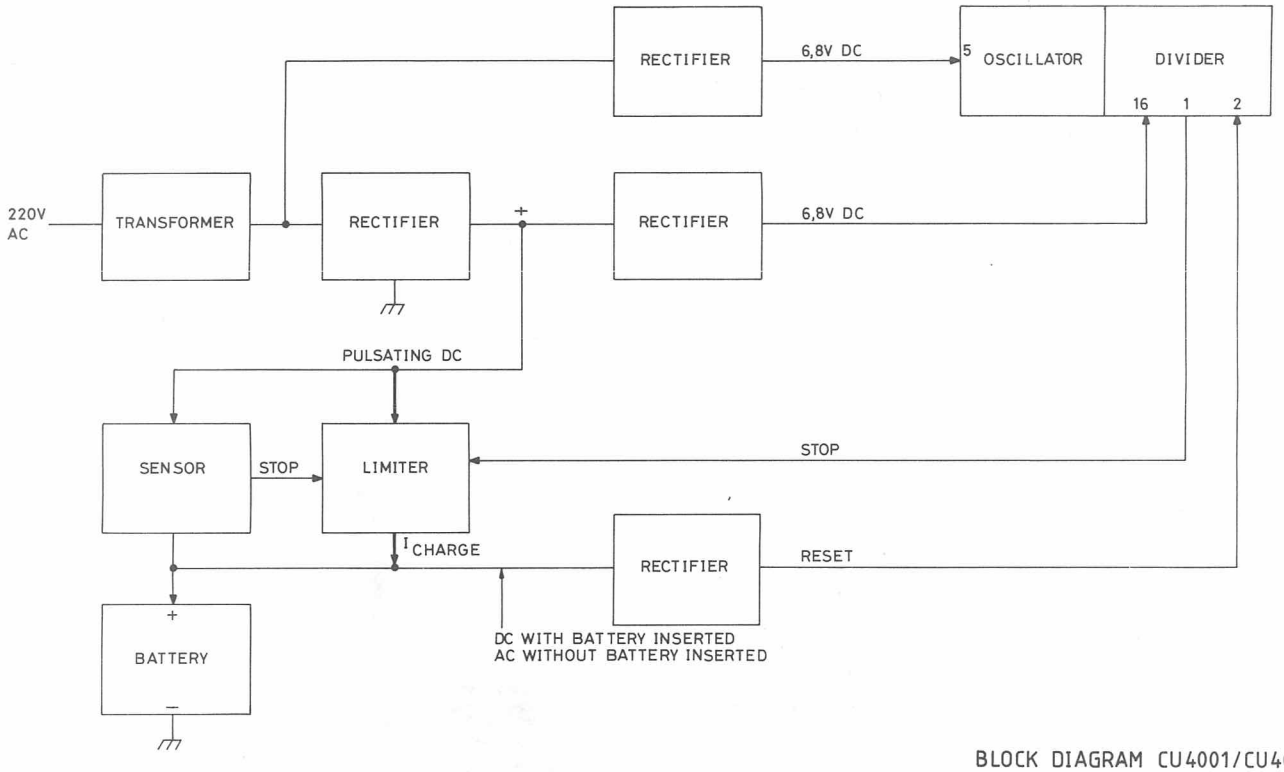

BLOCK DIAGRAM CU4001/CU4002

D403.314/2

The timing circuit U201-U301, consists of a clock pulse oscillator and a divider for each outlet. The oscillator is only supplied from the mains transformer (Pin 5). The divider is supplied from the mains transformer and from the inserted battery (Pin 16), in order to maintain information of the elapsed quick charge time and to stop oscillation in case of mains dropout.
The output voltage is limited to 11.5 V peak.
The proper functioning of the timer is ensured by a resetting circuitry sensing whether there is an alternating voltage or a DC voltage at the battery outlet (Q203, D206, R212, R213). The reset input of the frequency divider is at pin 2.
Each outlet is provided with a yellow LED-indicator (H201-H301)to show that charging is in process and a green LED (H202-H302) to show that battery is ready after the predetermined quick charging time.

When a 750 mAh battery is inserted into the charger an extra contact strip in the battery connects a capacitor (C202) in the charger to ground whereby the oscillator frequency is lowered to prolong the charging time.
The charger is short-circuit protected.

TECHNICAL SPECIFICATIONS

NOTE: All charge currents are mean values.

Supply voltage
220/240VAC, +10%, -15% 50/60 Hz.
Mains transformer primary is strapped to either 220 V or 240 V nom.

Input current
Max. 45 mA

Input power
Max. 11 W

Temperature range
10 - 45 deg.C

Output voltage
$U_{max.}$ = 11.5 Vpeak

Quick charge current at 220 V
min: 105 mA
typ: 120 mA
max: 135 mA

Standby charge rate at 220 V
min: 34 mA
typ: 38 mA
max: 42 mA

Short-circuit current
max. 80 mA (mean value)

Charging time/osc. frequency
450 mAh battery:
min: 4.8 h/480 Hz
typ: 5.3 h/435 Hz
max: 6.0 h/390 Hz

750 mAh battery:
min: 7.5 h/310 Hz
typ: 8.3 h/280 Hz
max: 9.1 h/250 Hz

Storno

Storno

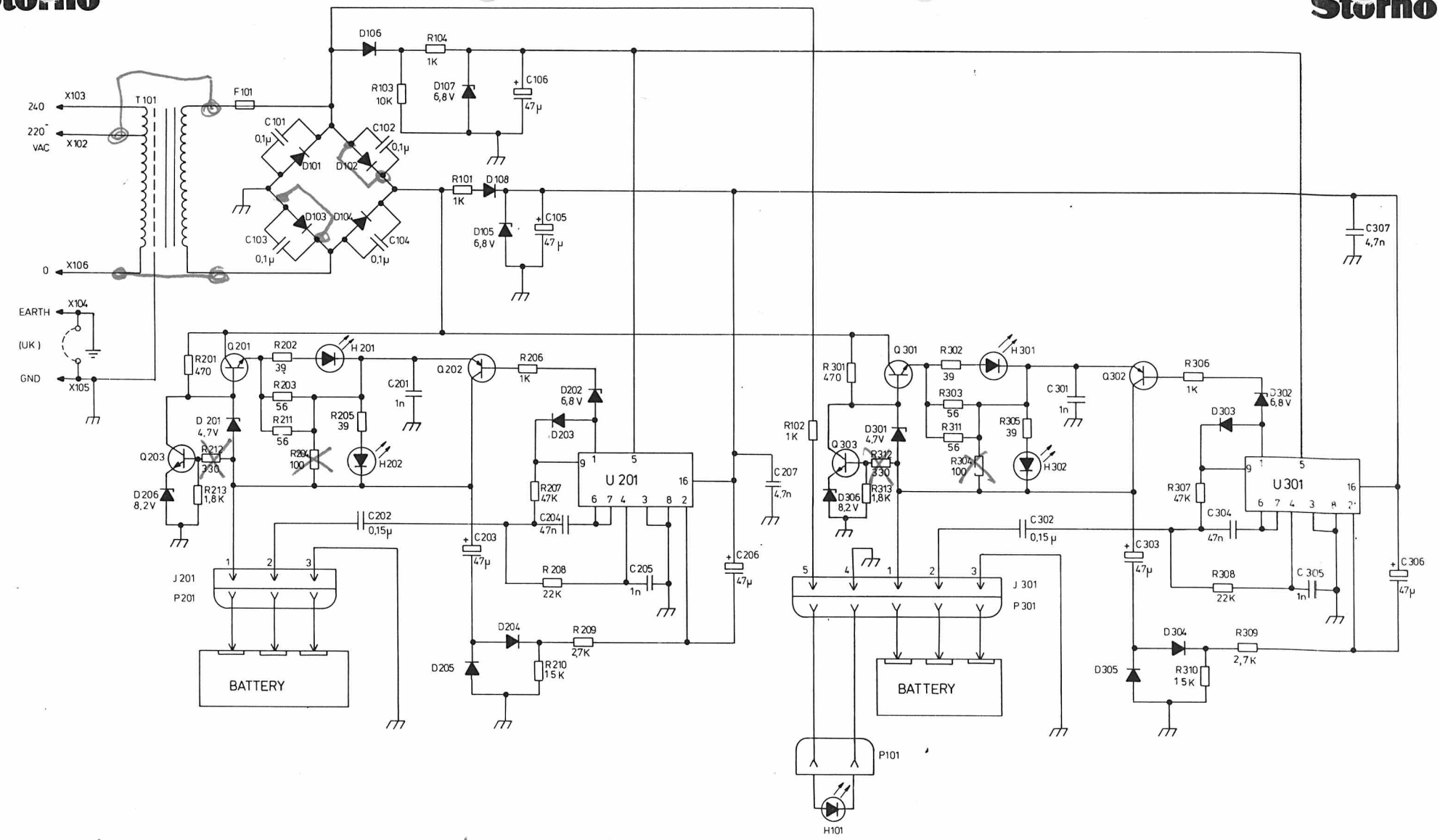

* 12-24 LODER KUN HVILE STRØM.
SAEF 5/9-89

CHARGING UNIT CU4001

D 403.293

Storno

Storno

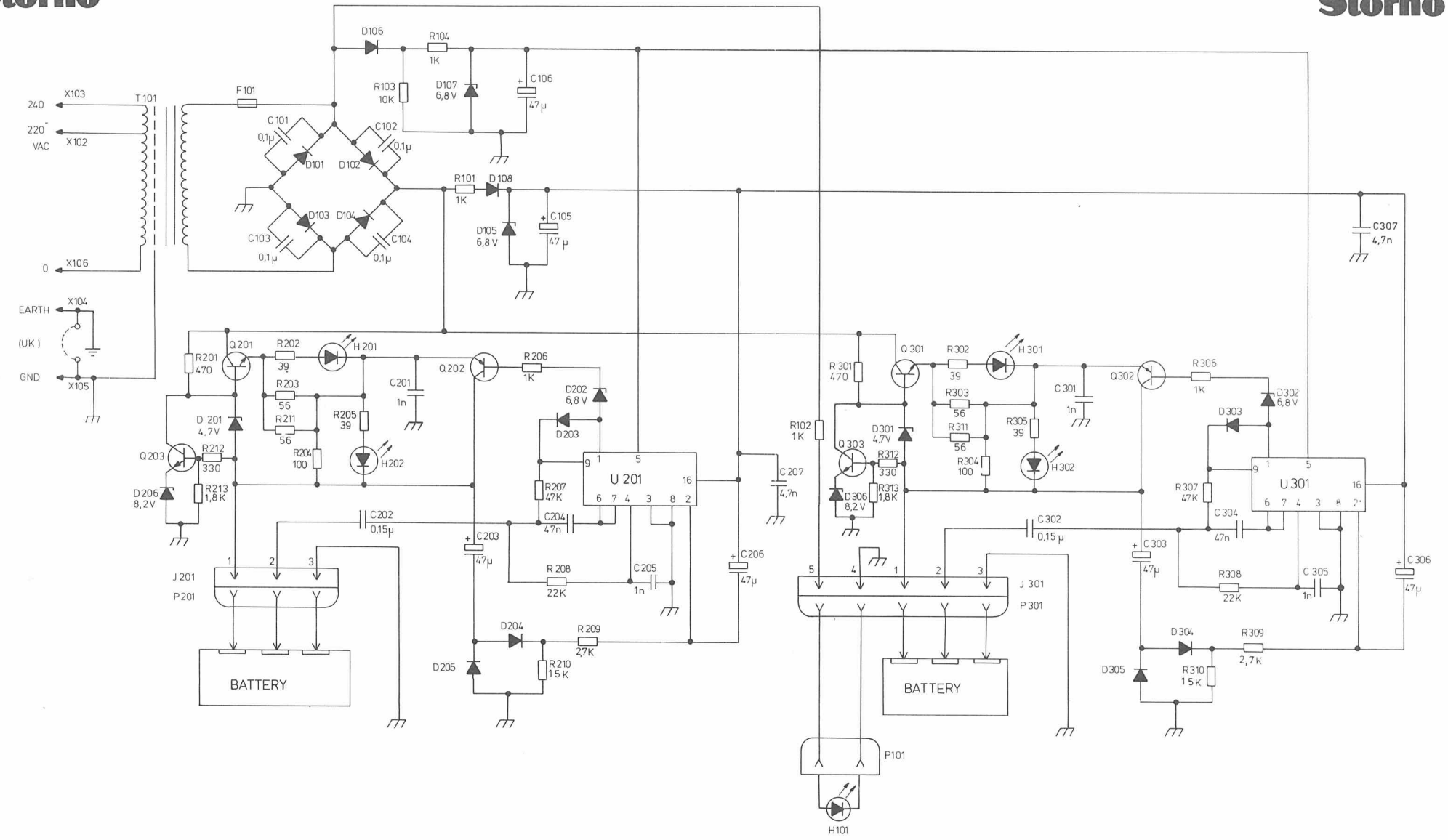

CHARGING UNIT CU4001

D403.293

Storno

Storno

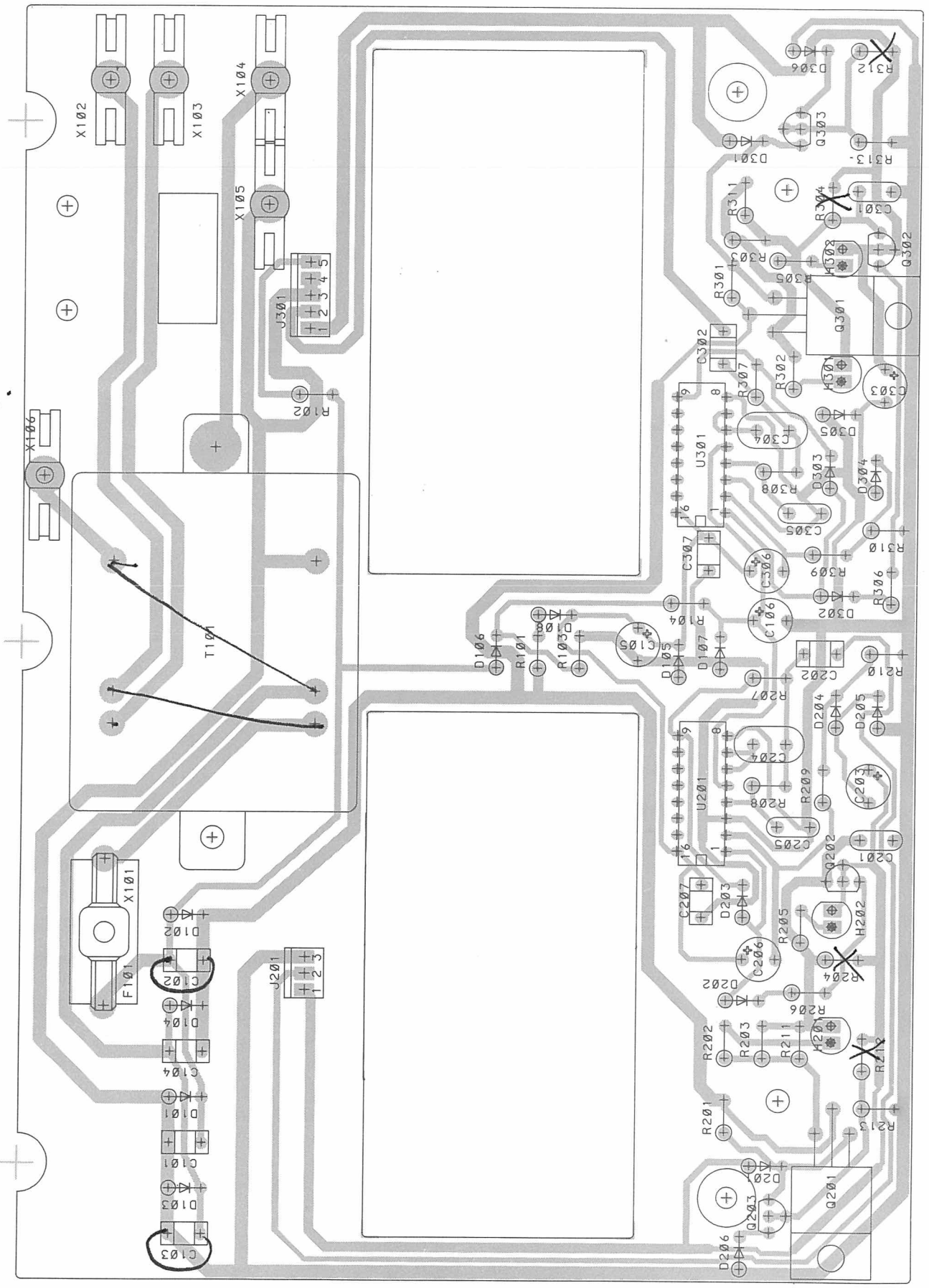

CHARGING UNIT CU4001
COMPONENT LAYOUT

D403.310

ITEM NUMBER	DESCRIPTION
M905550G1	CU4001 , BATT CHARGER
M905427G1	SUB ASM : CPNT BD CU4001

P A R T S L I S T:

CIRCUIT POSITION	COMPONENT ITEM NUMBER	COMPONENT DESCRIPTION	QUANTITY TOTAL
		MECHANICAL PARTS:	
	A700031P413	SCR M3X12	2
	A700034P4	NUT HEX M3	2
	A701312P4	WASH	2
	J706076P5	WASH	6
	J706212P205	SCREW	5
	J706902P1	CLAMP	1
	J706902P2	CLAMP	1
	J707524G1	CORD PWR ASM CU4001	1
	J706968P2	CORD PWR	1
	K805335P1	GROMMET	1
	J707525P1	LABEL,EUR	1
	J707688P2	BUMPER	4
	J707867P416	SCR	4
	L855370G1	CABINET ASM CU4000	1
	J706136P2	DIO OPTO	1
	J706163P1	NAME PLT	1
	J706212P205	SCREW	2
	J706921P1	RET	1
	J707527P1	WASH	2
	K805333P1	GUIDE	4
	K805336G1	CABLE-SLIDE BD	1
	K805336G2	CABLE-SLIDE BD AND LED	1
	K805356G1	CAB CHARGER DRILL	1
	L855361P1	SPRING	2
	L855365G1	SLIDE BD ASM CU4001	2
	A701488P2	RING RETAINING	3
	J707531P1	SPRING	3
	K805339P1	CONTACT PIN	3
	M905485P1	SLIDE BD	1
	L855404G1	PLATE BOT PAINT	1
		COMPONENT BOARD:	
U201	A700029P214	INT CKT TIMR 4521B	1
U301	A700029P214	INT CKT TIMR 4521B	1
Q201	A700054P1	TSTR NPN SI BD 201	1
Q301	A700054P1	TSTR NPN SI BD 201	1
J201	A700072P29	CONN PWB MALE 03 CKT	1
J301	A700072P31	CONN PWB MALE 05 CKT	1
C201	A700233P7	CAP CER 1NF 50V	1
C205	A700233P7	CAP CER 1NF 50V	1
C301	A700233P7	CAP CER 1NF 50V	1
C305	A700233P7	CAP CER 1NF 50V	1
C204	A702059P11	CAP PYES 47U 5% 50V	1
C304	A702059P11	CAP PYES 47U 5% 50V	1
R202	A702110P20	RES DEPC 39R 5% 1/4W	1
R205	A702110P20	RES DEPC 39R 5% 1/4W	1
R302	A702110P20	RES DEPC 39R 5% 1/4W	1
R305	A702110P20	RES DEPC 39R 5% 1/4W	1
R203	A702110P22	RES DEPC 56R 5% 1/4W	1
R211	A702110P22	RES DEPC 56R 5% 1/4W	1
R303	A702110P22	RES DEPC 56R 5% 1/4W	1

CIRCUIT POSITION	COMPONENT ITEM NUMBER	COMPONENT DESCRIPTION	QUANTITY
R311	A702110P22	RES DEPC 56R 5% 1/4W	1
R204	A702110P25	RES DEPC 100R 5% 1/4W	1
R304	A702110P25	RES DEPC 100R 5% 1/4W	1
R212	A702110P31	RES DEPC 330R 5% 1/4W	1
R312	A702110P31	RES DEPC 330R 5% 1/4W	1
R201	A702110P33	RES DEPC 470R 5% 1/4W	1
R301	A702110P33	RES DEPC 470R 5% 1/4W	1
R101	A702110P37	RES DEPC 1KO 5% 1/4W	1
R102	A702110P37	RES DEPC 1KO 5% 1/4W	1
R104	A702110P37	RES DEPC 1KO 5% 1/4W	1
R206	A702110P37	RES DEPC 1KO 5% 1/4W	1
R306	A702110P37	RES DEPC 1KO 5% 1/4W	1
R213	A702110P40	RES DEPC 1K8 5% 1/4W	1
R313	A702110P40	RES DEPC 1K8 5% 1/4W	1
R209	A702110P42	RES DEPC 2K7 5% 1/4W	1
R309	A702110P42	RES DEPC 2K7 5% 1/4W	1
R103	A702110P49	RES DEPC 10K 5% 1/4W	1
R210	A702110P51	RES DEPC 15K 5% 1/4W	1
R310	A702110P51	RES DEPC 15K 5% 1/4W	1
R208	A702110P53	RES DEPC 22K 5% 1/4W	1
R308	A702110P53	RES DEPC 22K 5% 1/4W	1
R207	A702110P57	RES DEPC 47K 5% 1/4W	1
R307	A702110P57	RES DEPC 47K 5% 1/4W	1
D101	J706100P1	DIO SI SIG 1N4001	1
D102	J706100P1	DIO SI SIG 1N4001	1
D103	J706100P1	DIO SI SIG 1N4001	1
D104	J706100P1	DIO SI SIG 1N4001	1
H201	J706136P3	DIO OPTO ELEC YELLOW	1
H301	J706136P3	DIO OPTO ELEC YELLOW	1
H202	J706136P4	DIO OPTO ELEC GREEN	1
H302	J706136P4	DIO OPTO ELEC GREEN	1
X101	J706903P1	FZ HLR	1
X102	J706904P1	TERM SLD RLN 2689002	1
X103	J706904P1	TERM SLD RLN 2689002	1
X104	J706904P1	TERM SLD RLN 2689002	1
X105	J706904P1	TERM SLD RLN 2689002	1
X106	J706904P1	TERM SLD RLN 2689002	1
F101	J706998P5	FUSE CTG 0.500A	1
C105	J707353P9	CAP ELEC 47 UF 16V	1
C106	J707353P9	CAP ELEC 47 UF 16V	1
C203	J707353P9	CAP ELEC 47 UF 16V	1
C206	J707353P9	CAP ELEC 47 UF 16V	1
C303	J707353P9	CAP ELEC 47 UF 16V	1
C306	J707353P9	CAP ELEC 47 UF 16V	1
C207	J707412P1	CAP PYES 4N7 10% 63V	1
C307	J707412P1	CAP PYES 4N7 10% 63V	1
C202	J707412P10	CAP PYES 150N 10% 63V	1
C302	J707412P10	CAP PYES 150N 10% 63V	1
C101	J707412P9	CAP PYES 100N 10% 63V	1
C102	J707412P9	CAP PYES 100N 10% 63V	1
C103	J707412P9	CAP PYES 100N 10% 63V	1
C104	J707412P9	CAP PYES 100N 10% 63V	1
Q202	J707435P1	TSTR PNP SI BC 369	1
Q302	J707435P1	TSTR PNP SI BC 369	1
	J707507P1	TRAFO	1
Q203	J707511P1	TSTR SI BC548	1

CIRCUIT POSITION	COMPONENT ITEM NUMBER	COMPONENT DESCRIPTION	QUANTITY
Q303	J707511P1	TSTR SI BC548	1
D106	J707513P1	DIO SI 1N4148	1
D108	J707513P1	DIO SI 1N4148	1
D203	J707513P1	DIO SI 1N4148	1
D204	J707513P1	DIO SI 1N4148	1
D205	J707513P1	DIO SI 1N4148	1
D303	J707513P1	DIO SI 1N4148	1
D304	J707513P1	DIO SI 1N4148	1
D305	J707513P1	DIO SI 1N4148	1
D201	J707514P1	DIO SI ZENR 4,7V	1
D301	J707514P1	DIO SI ZENR 4,7V	1
D105	J707514P4	DIO SI ZENR 6,8V	1
D107	J707514P4	DIO SI ZENR 6,8V	1
D202	J707514P4	DIO SI ZENR 6,8V	1
D302	J707514P4	DIO SI ZENR 6,8V	1
D206	J707514P5	DIO SI ZENR 8,2V	1
D306	J707514P5	DIO SI ZENR 8,2V	1

ITEM NUMBER	DESCRIPTION
M905550G1	CU4001 , BATT CHARGER
M905427G1	SUB ASM : CPNT BD CU4001
L855370G1	SUB ASM : CABINET ASM CU400X
L855365G1	SUB-SUB ASM : SLIDE BD ASM CU4001
J707524G1	SUB-SUB ASM : PWR-CORD ASM CU4001

P A R T S L I S T

CIRCUIT POSITION	COMPONENT ITEM NUMBER	COMPONENT DESCRIPTION	QUANTITY TOTAL
	L855370G1	CABINET ASM CU4000	(1)
	A700031P413	SCR M3 X 13 MM	2
	A700034P4	NUT HEX M3	2
	A701312P4	WASH	2
	J706076P5	WASH	6
	J706136P2	DIO OPTO	1
	J706163P1	NAME PLT	1
	J706212P205	SCREW P.HD SZ 4,0 X 12,7MM	7
	J706902P1	CLAMP	1
	J706902P2	CLAMP	1
	J706921P1	RET	1
	J707524G1	CORD PWR ASM CU4001	1
	J707525P1	LABEL,EUR	1
	J707527P1	WASH	2
	J707688P2	BUMPER	4
	J707867P416	SCREW	4
	K805333P1	GUIDE	4
	K805336G1	CABLE-SLIDE BD	1
	K805336G2	CABLE-SLIDE BD AND LED	1
	K805356G1	CAB CHARGER DRILL	1
	L855361P1	SPRING	2
	L855404G1	PLATE BOT PAINT	1
	L855365G1	SLIDE BD ASM CU4001	(2)
	A701488P2	RING RETAINING	6
	J707531P1	SPRING COMPR D=2,8 - L=8,6 ;	6
	K805339P1	CONTACT PIN	6
	M905485P1	SLIDE BD	2
	COMPONENT BOARD:		
C101	J707412P9	CAP PYES 100N 10% 63V	1
C102	J707412P9	CAP PYES 100N 10% 63V	1
C103	J707412P9	CAP PYES 100N 10% 63V	1
C104	J707412P9	CAP PYES 100N 10% 63V	1
C105	J707353P9	CAP ELEC 47 UF 16V	1
C106	J707353P9	CAP ELEC 47 UF 16V	1
C201	A700233P7	CAP CER 1NF 50V	1
C202	J707412P10	CAP PYES 150N 10% 63V	1

CIRCUIT POSITION	COMPONENT ITEM NUMBER	COMPONENT DESCRIPTION	QUANTITY TOTAL
C203	J707353P9	CAP ELEC 47 UF 16V	1
C204	A702059P11	CAP PYES 47U 5% 50V	1
C205	A700233P7	CAP CER 1NF 50V	1
C206	J707353P9	CAP ELEC 47 UF 16V	1
C207	J707412P1	CAP PYES 4N7 10% 63V	1
C301	A700233P7	CAP CER 1NF 50V	1
C302	J707412P10	CAP PYES 150N 10% 63V	1
C303	J707353P9	CAP ELEC 47 UF 16V	1
C304	A702059P11	CAP PYES 47U 5% 50V	1
C305	A700233P7	CAP CER 1NF 50V	1
C306	J707353P9	CAP ELEC 47 UF 16V	1
C307	J707412P1	CAP PYES 4N7 10% 63V	1
D101	J706100P1	DIO SI SIG 1N4001	1
D102	J706100P1	DIO SI SIG 1N4001	1
D103	J706100P1	DIO SI SIG 1N4001	1
D104	J706100P1	DIO SI SIG 1N4001	1
D105	J707514P4	DIO SI ZENR 6,8V	1
D106	J707513P1	DIO SI 1N4148	1
D107	J707514P4	DIO SI ZENR 6,8V	1
D108	J707513P1	DIO SI 1N4148	1
D201	J707514P1	DIO SI ZENR 4,7V	1
D202	J707514P4	DIO SI ZENR 6,8V	1
D203	J707513P1	DIO SI 1N4148	1
D204	J707513P1	DIO SI 1N4148	1
D205	J707513P1	DIO SI 1N4148	1
D206	J707514P5	DIO SI ZENR 8,2V	1
D301	J707514P1	DIO SI ZENR 4,7V	1
D302	J707514P4	DIO SI ZENR 6,8V	1
D303	J707513P1	DIO SI 1N4148	1
D304	J707513P1	DIO SI 1N4148	1
D305	J707513P1	DIO SI 1N4148	1
D306	J707514P5	DIO SI ZENR 8,2V	1
F101	J706998P5	FUSE CTG 0.500A	1
H201	J706136P3	DIO OPTO ELEC YELLOW	1
H202	J706136P4	DIO OPTO ELEC GREEN	1
H301	J706136P3	DIO OPTO ELEC YELLOW	1
H302	J706136P4	DIO OPTO ELEC GREEN	1
J201	A700072P29	CONN PWB MALE 03 CKT	1
J301	A700072P31	CONN PWB MALE 05 CKT	1
Q201	A700054P1	TSTR NPN SI BD 201	1
Q202	J707435P1	TSTR PNP SI BC 369	1
Q203	J707511P1	TSTR SI BC548	1
Q301	A700054P1	TSTR NPN SI BD 201	1
Q302	J707435P1	TSTR PNP SI BC 369	1
Q303	J707511P1	TSTR SI BC548	1
R101	A702110P37	RES DEPC 1KO 5% 1/4W	1
R102	A702110P37	RES DEPC 1KO 5% 1/4W	1
R103	A702110P49	RES DEPC 10K 5% 1/4W	1
R104	A702110P37	RES DEPC 1KO 5% 1/4W	1
R201	A702110P33	RES DEPC 470R 5% 1/4W	1
R202	A702110P20	RES DEPC 39R 5% 1/4W	1

CIRCUIT POSITION	COMPONENT ITEM NUMBER	COMPONENT DESCRIPTION	QUANTITY TOTAL
R203	A702110P22	RES DEPC 56R 5% 1/4W	1
R204	A702110P25	RES DEPC 100R 5% 1/4W	1
R205	A702110P20	RES DEPC 39R 5% 1/4W	1
R206	A702110P37	RES DEPC 1KO 5% 1/4W	1
R207	A702110P57	RES DEPC 47K 5% 1/4W	1
R208	A702110P53	RES DEPC 22K 5% 1/4W	1
R209	A702110P42	RES DEPC 2K7 5% 1/4W	1
R210	A702110P51	RES DEPC 15K 5% 1/4W	1
R211	A702110P22	RES DEPC 56R 5% 1/4W	1
R212	A702110P31	RES DEPC 330R 5% 1/4W	1
R213	A702110P40	RES DEPC 1K8 5% 1/4W	1
R301	A702110P33	RES DEPC 470R 5% 1/4W	1
R302	A702110P20	RES DEPC 39R 5% 1/4W	1
R303	A702110P22	RES DEPC 56R 5% 1/4W	1
R304	A702110P25	RES DEPC 100R 5% 1/4W	1
R305	A702110P20	RES DEPC 39R 5% 1/4W	1
R306	A702110P37	RES DEPC 1KO 5% 1/4W	1
R307	A702110P57	RES DEPC 47K 5% 1/4W	1
R308	A702110P53	RES DEPC 22K 5% 1/4W	1
R309	A702110P42	RES DEPC 2K7 5% 1/4W	1
R310	A702110P51	RES DEPC 15K 5% 1/4W	1
R311	A702110P22	RES DEPC 56R 5% 1/4W	1
R312	A702110P31	RES DEPC 330R 5% 1/4W	1
R313	A702110P40	RES DEPC 1K8 5% 1/4W	1
T101	J707507P1	TRAFO	1
U201	A700029P214	INT CKT TIMR 4521B	1
U301	A700029P214	INT CKT TIMR 4521B	1
X101	J706903P1	FZ HLR	1
X102	J706904P1	TERM SLD RLN 2689002	1
X103	J706904P1	TERM SLD RLN 2689002	1
X104	J706904P1	TERM SLD RLN 2689002	1
X105	J706904P1	TERM SLD RLN 2689002	1
X106	J706904P1	TERM SLD RLN 2689002	1

Storno

TEST ADAPTOR

SE4002

The test adaptor is designed with the same dimension as a battery and fits into the battery compartment. The adaptor can be used to connect various test instruments to the radio and has built-in toggle switches to operate the radio during test and when adjusting the circuitry.

7.2 V CABLE

A cable terminated in two banana plugs, one red and one black, connects to the external power supply whose nominal output voltage should be +7.2 V.

AF OUT CABLE

A coaxial cable terminated in a BNC plug is used to measure the receiver AF output, either the line output (nominal 110 mV) or the loudspeaker output, dependent on the setting of the AF-LINE switch.

MOD. IN CABLE

A coaxial cable terminated in a BNC plug connects to an AF generator for external modulation of the transmitter. The test adaptor has a built-in 11:1 attenuator and the nominal modulation sensitivity as measured at the generator output is 110 mV/1 kHz

TOGGLE SWITCHES

KEY
switches between receive mode RX and transmit mode TX.

AF-LINE
switches the AF out cable between the line output and the loudspeaker output.

AF
switches the AF receiver output between the internal loudspeaker INT and a built-in 8 ohm dummy load.

SQ
switches between the normal SQUELCH function and the unsquelched condition CANCEL.

EN and TONE
are switches which when manipulated as described below key the transmitter and continuously modulate it with the first tone of the tone receiver code. The EN switch should always be in OFF position and the TONE switch in ON position unless the tone module is being tested.

The following procedure sets up the tone test mode:

1. Turn radio OFF
2. Set KEY to RX
3. Set EN to OFF
4. Set TONE to ON
5. Turn radio ON
6. Set TONE to OFF
7. Set KEY to TX
8. Set TONE to ON
9. Set EN to ON

The radio will now be in transmit mode and continuously modulated with a frequency which is the first tone of the tone receiver telegram code.

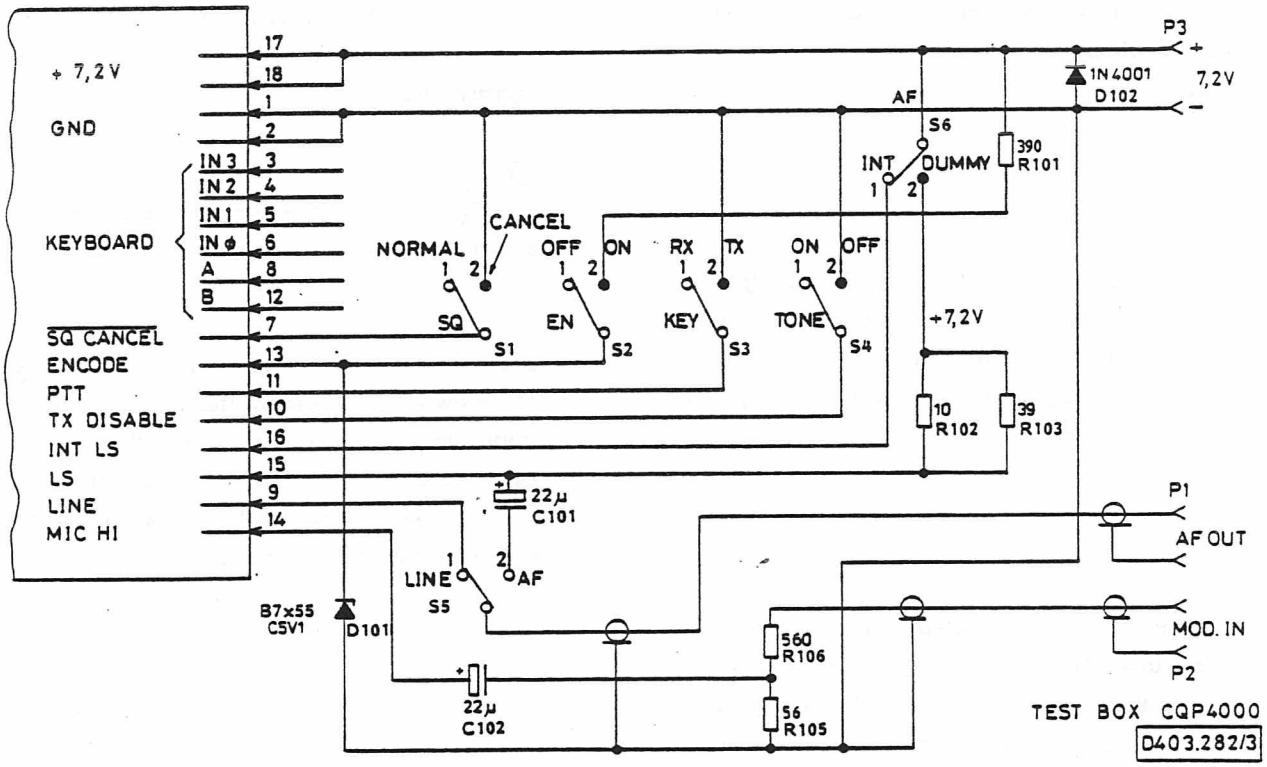

TEST ADAPTOR

SE4002

The test adaptor is designed with the same dimension as a battery and fits into the battery compartment. The adaptor can be used to connect various test instruments to the radio and has built-in toggle switches to operate the radio during test and when adjusting the circuitry.

7.2 V CABLE

A cable terminated in two banana plugs, one red and one black, connects to the external power supply whose nominal output voltage should be +7.2 V.

AF OUT CABLE

A coaxial cable terminated in a BNC plug is used to measure the receiver AF output, either the line output (nominal 110 mV) or the loudspeaker output, dependent on the setting of the AF-LINE switch.

MOD. IN CABLE

A coaxial cable terminated in a BNC plug connects to an AF generator for external modulation of the transmitter. The test adaptor has a built-in 11:1 attenuator and the nominal modulation sensitivity as measured at the generator output is 110 mV/1 kHz

TOGGLE SWITCHES

KEY
switches between receive mode RX and transmit mode TX.

AF-LINE
switches the AF out cable between the line output and the loudspeaker output.

AF
switches the AF receiver output between the internal loudspeaker INT and a built-in 8 ohm dummy load.

SQ
switches between the normal SQUELCH function and the unsquelched condition CANCEL.

EN and TONE
are switches which when manipulated as described below key the transmitter and continuously modulate it with the first tone of the tone receiver code. The EN switch should always be in OFF position (in ON position part of the keyboard is blocked). The TONE switch should be in ON position for selection of the customer designed program and in OFF position for selection of the built-in service program.

IMPORTANT FOR USE WITH CQP4000 AUTOMATIC
Before removing the testadaptor or switching off the supply voltage make sure the KEY switch is in position RX. If not, the CL-board can be damaged and the back-up battery will be subject to excessive current drain. Also the main program of the radio may be harmed and it should always be ensured that the radio is operating properly after having been in service mode.

Note
When the test adaptor is used in conjunction with CQP4000 with BINARY SIGNALLING and CQP4000 AUTOMATIC the operation of the radio is performed from the keyboard in service mode which is enabled by setting the EN and TONE switches to OFF and turn the radio ON.

The following procedure sets up the tone test mode:

1. Turn radio OFF
2. Set KEY to RX
3. Set EN to OFF
4. Set TONE to ON
5. Turn radio ON
6. Set TONE to OFF
7. Set KEY to TX
8. Set TONE to ON
9. Set EN to ON

The radio will now be in transmit mode and continuously modulated with a frequency which is the first tone of the tone receiver telegram code.

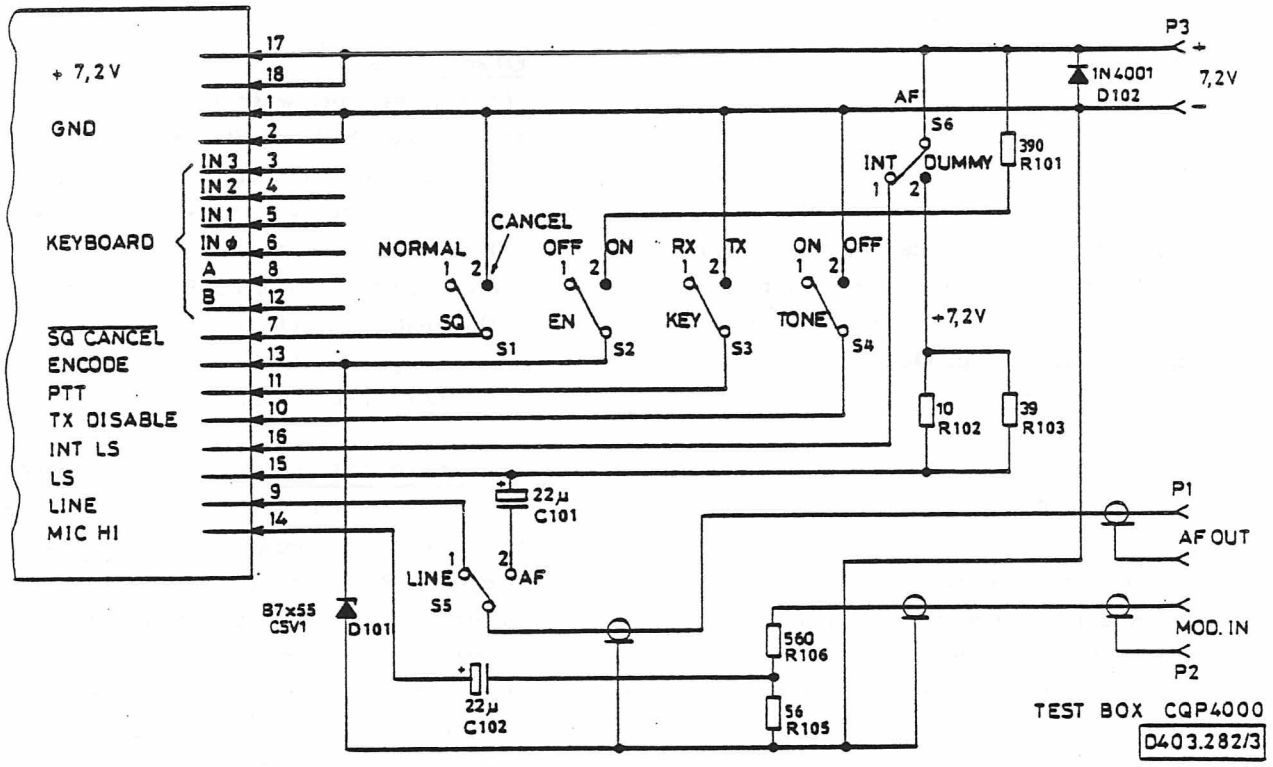

ITEM NUMBER	DESCRIPTION
K805371G1	SE 4002

L855450G1	SUB ASM CPNT BD SE4002

P A R T S L I S T :

CIRCUIT POSITION	COMPONENT ITEM NUMBER	COMPONENT DESCRIPTION	QUANTITY TOTAL
	A700189P1	SW TGL 7101G	6
	J706075P2	GROMMET	3
	J707717P1	NAME PLATE	1
	J707726G1	COV,DRILLED	1
	J707727G1	COV,MACHINED	1
	J707736P6	WASHER 8.4X12X0.9 MM	3
	J707749G1	CABLE ASM	2
	J706049P2	CABLE RF COAX	(1)
	J707750P1	CONN RF COAX 50R PLG BNC	1
	K805375G1	CABLE ASM	(1)
	J707734P1	CONN	1
	J707734P2	CONN	1
	J707735P1	CABLE POWER 2-COND	1
	L855450G1	CPNT BD	(1)
R102	A700019P13	RES DEPC 10R 5% 1/4W	1
R103	A700019P20	RES DEPC 39R 5% 1/4W	1
R105	A700019P22	RES DEPC 56R 5% 1/4W	1
R101	A700019P32	RES DEPC 390R 5% 1/4W	1
R106	A700019P34	RES DEPC 560R 5% 1/4W	1
D101	A700025P6	DIO SI ZENR 5V1 5% 0,4W	1
D102	J706100P1	DIO SI SIG 1N4001	1
	J706315P5	SPACER	4
C101	J707444P8	CAP TA SOL 22U 20% 16V	1
C102	J707444P8	CAP TA SOL 22U 20% 16V	1
	L855439P1	BD PW	1

Storno

SE4005

SERVICE EQUIPMENT

The Service Equipment is designed to hold and operate the RF board and CL board of a STORNOPHONE 4000 during test and alignment. When the boards are inserted in the Service Equipment both sides of the boards are accessible for measurements and adjustments.

The normal test instruments can be connected to the Service Equipment which also has a built-in loudspeaker for audio tests.

On the top a keyboard and six toggle switches are used to operate the radio.

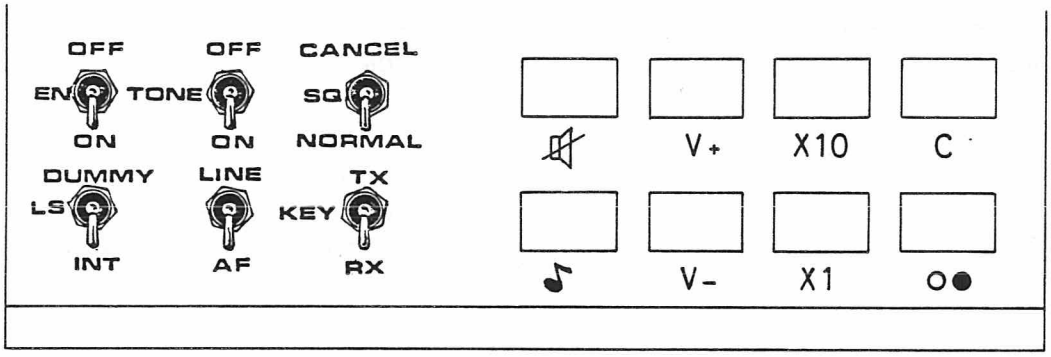

POWER SUPPLY

Two banana sockets, one red and one black, connect to the external power supply which should be +7.2 V.

AF OUT

A BNC connector is used to connect an AF voltmeter or a distortion meter for measuring the receiver AF output. Both the line output (nominal 110 mV) an the loudspeaker output can be measured, depending on the setting of the AF-LINE switch.

AF IN

A BNC connector is used to connect an AF generator for external modulation of the transmitter.

The service equipment has a built-in attenuator and the nominal modulation sensitivity as measured at the generator output is 110 mV/1 kHz.

LOUDSPEAKER

The Service Equipment has a built in loudspeaker which can be used to monitor the receiver AF output when the LS switch is set to INT.

KEYBOARD

The keyboard comprises the normal 8 buttons found on the CP4001 and is used to operate the RF and CL boards under test.

TROGGLE SWITCHES

KEY
switches between receive mode RX and transmit mode TX.

AF-LINE
switches the AF out between the line output and the loudspeaker output.

LS
switches the AF receiver output between the internal loudspeaker INT and a built-in 8 ohm dummy load.

SQ
switches between the normal SQUELCH function and the unsquelched condition CANCEL.

EN and TONE
are switches which when manipulated as described below key the transmitter and continuously modulate it with the first tone of the tone receiver code. The EN switch should always be in OFF position and the TONE switch in ON position unless the tone module is being tested.

The following procedure sets up the tone test mode:

1. Turn radio OFF
2. Set KEY to RX
3. Set EN to OFF
4. Set TONE to ON
5. Turn radio ON
6. Set TONE to OFF
7. Set KEY to TX
8. Set TONE to ON
9. Set EN to ON

The radio will now be in transmit mode and continuously modulated with a frequency which is the first tone of the tone receiver telegram code.

Storno

SE4005

SERVICE EQUIPMENT

The Service Equipment is designed to hold and operate the RF board and CL board of a STORNOPHONE 4000 during test and alignment. When the boards are inserted in the Service Equipment both sides of the boards are accessible for measurements and adjustments.

The normal test instruments can be connected to the Service Equipment which also has a built-in loudspeaker for audio tests.

On the top a keyboard and six toggle switches are used to operate the radio.

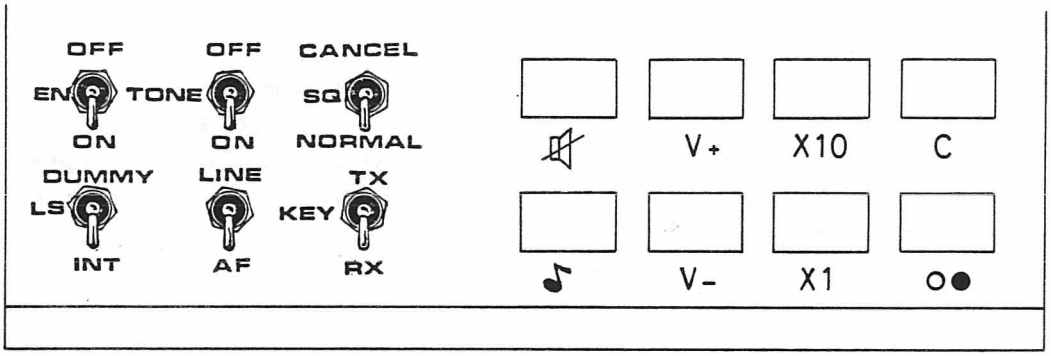

POWER SUPPLY

Two banana sockets, one red and one black, connect to the external power supply which should be +7.2 V.

AF OUT

A BNC connector is used to connect an AF voltmeter or a distortion meter for measuring the receiver AF output. Both the line output (nominal 110 mV) an the loudspeaker output can be measured, depending on the setting of the AF-LINE switch.

AF IN

A BNC connector is used to connect an AF generator for external modulation of the transmitter. The service equipment has a built-in attenuator and the nominal modulation sensitivity as measured at the generator output is 110 mV/1 kHz.

LOUDSPEAKER

The Service Equipment has a built in loudspeaker which can be used to monitor the receiver AF output when the LS switch is set to INT.

KEYBOARD

The keyboard comprises the normal 8 buttons found on the CP4001 and is used to operate the RF and CL boards under test.

TOGGLE SWITCHES

KEY
switches between receive mode RX and transmit mode TX.

AF-LINE
switches the AF out between the line output and the loudspeaker output.

LS
switches the AF receiver output between the internal loudspeaker INT and a built-in 8 ohm dummy load.

SQ
switches between the normal SQUELCH function and the unsquelched condition CANCEL.

EN and TONE
are switches which when manipulated as described below key the transmitter and continuously modulate it with the first tone of the tone receiver code. The EN switch should always be in OFF position (in ON position part of the keyboard is blocked). The TONE switch should be in ON position for selection of the customer designed program and in OFF position for selection of the built-in service program.

IMPORTANT FOR USE WITH CQP4000 AUTOMATIC
Before removing the testadaptor or switching off the supply voltage make sure the KEY switch is in position RX. If not, the CL-board can be damaged and the back-up battery will be subject to excessive current drain. Also the main program of the radio may be harmed and it should always be ensured that the radio is operating properly after having been in service mode.

The following procedure sets up the tone test mode:

1. Turn radio OFF
2. Set KEY to RX
3. Set EN to OFF
4. Set TONE to ON
5. Turn radio ON
6. Set TONE to OFF
7. Set KEY to TX
8. Set TONE to ON
9. Set EN to ON

The radio will now be in transmit mode and continuously modulated with a frequency which is the first tone of the tone receiver telegram code.

Note
When the test adaptor is used in conjunction with CQP4000 with BINARY SIGNALLING and CQP4000 AUTOMATIC the operation of the radio is performed from the keyboard in service mode which is enabled by setting the EN and TONE switches to OFF and turn the radio ON.

Storno

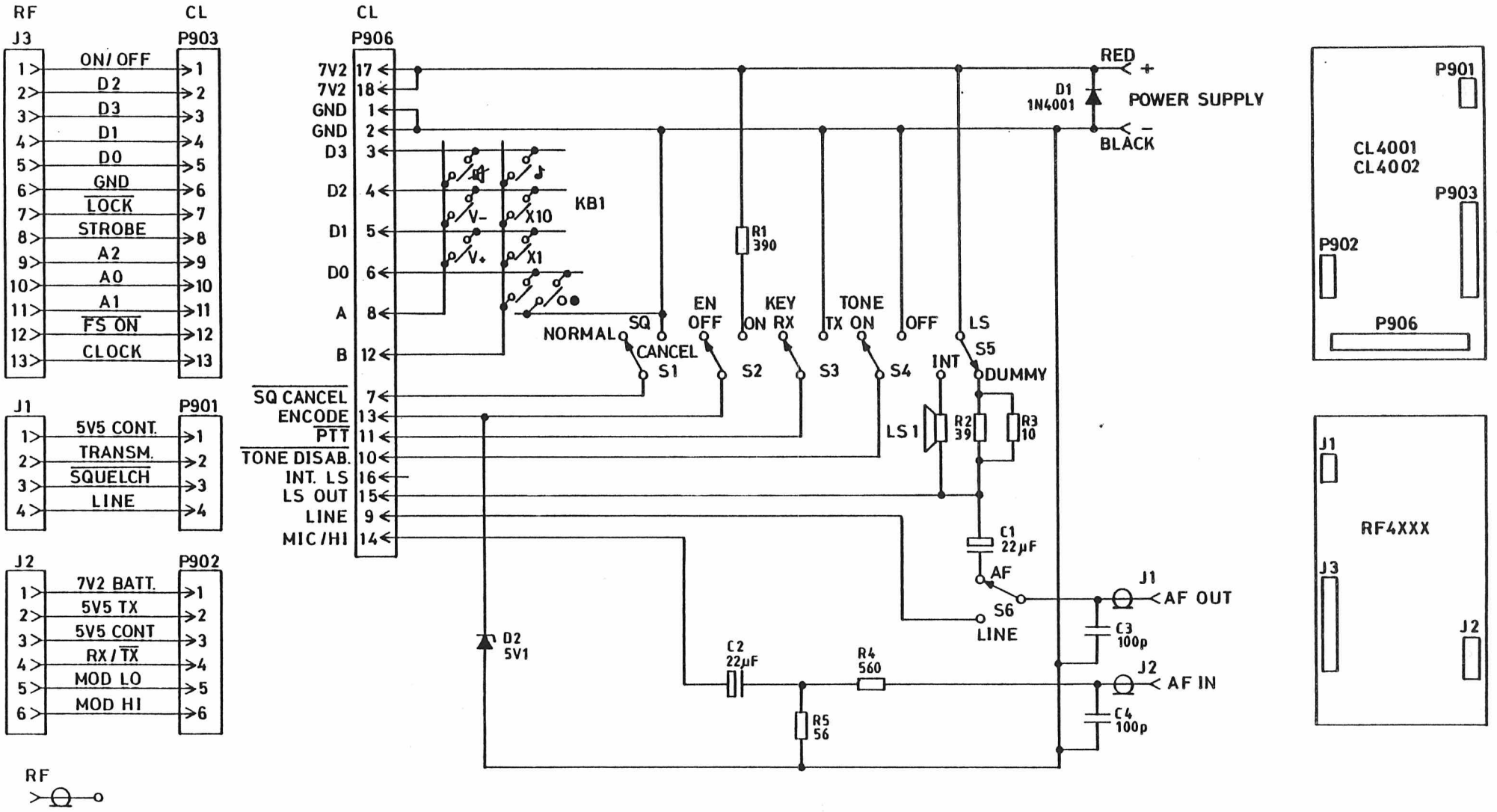

STORNOPHONE 4000
SERVICE EQUIPMENT SE4005

CODE NO. 95D5008-00 | D404.015

Storno

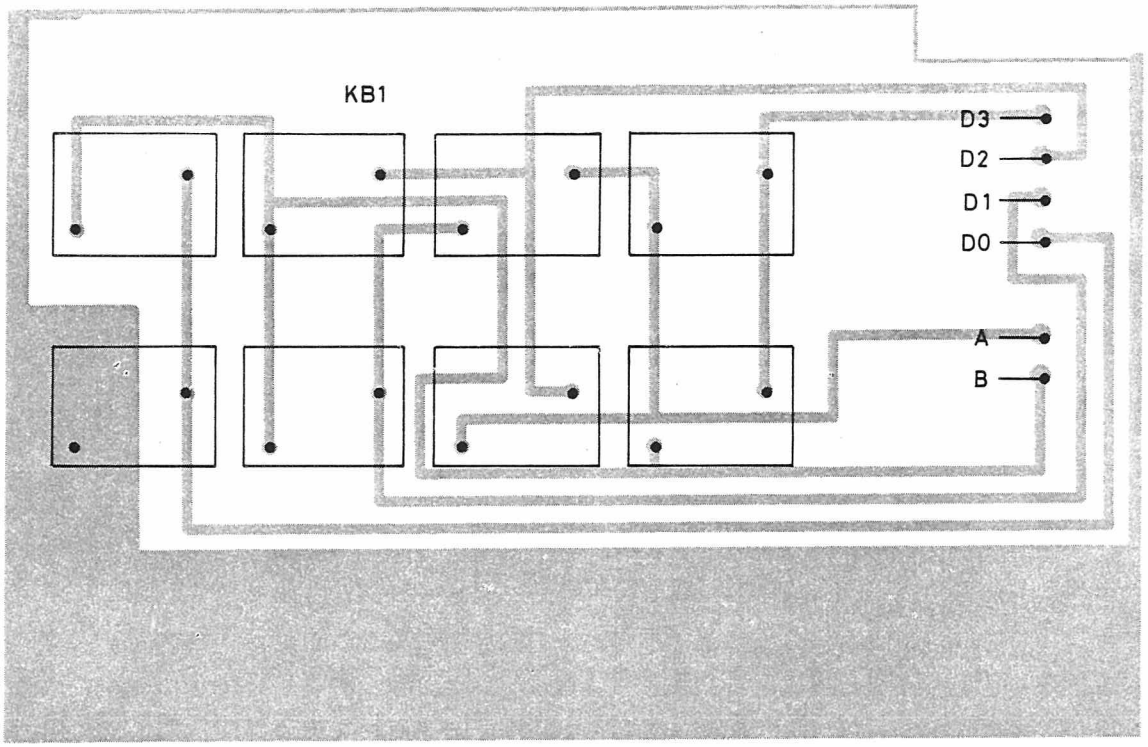

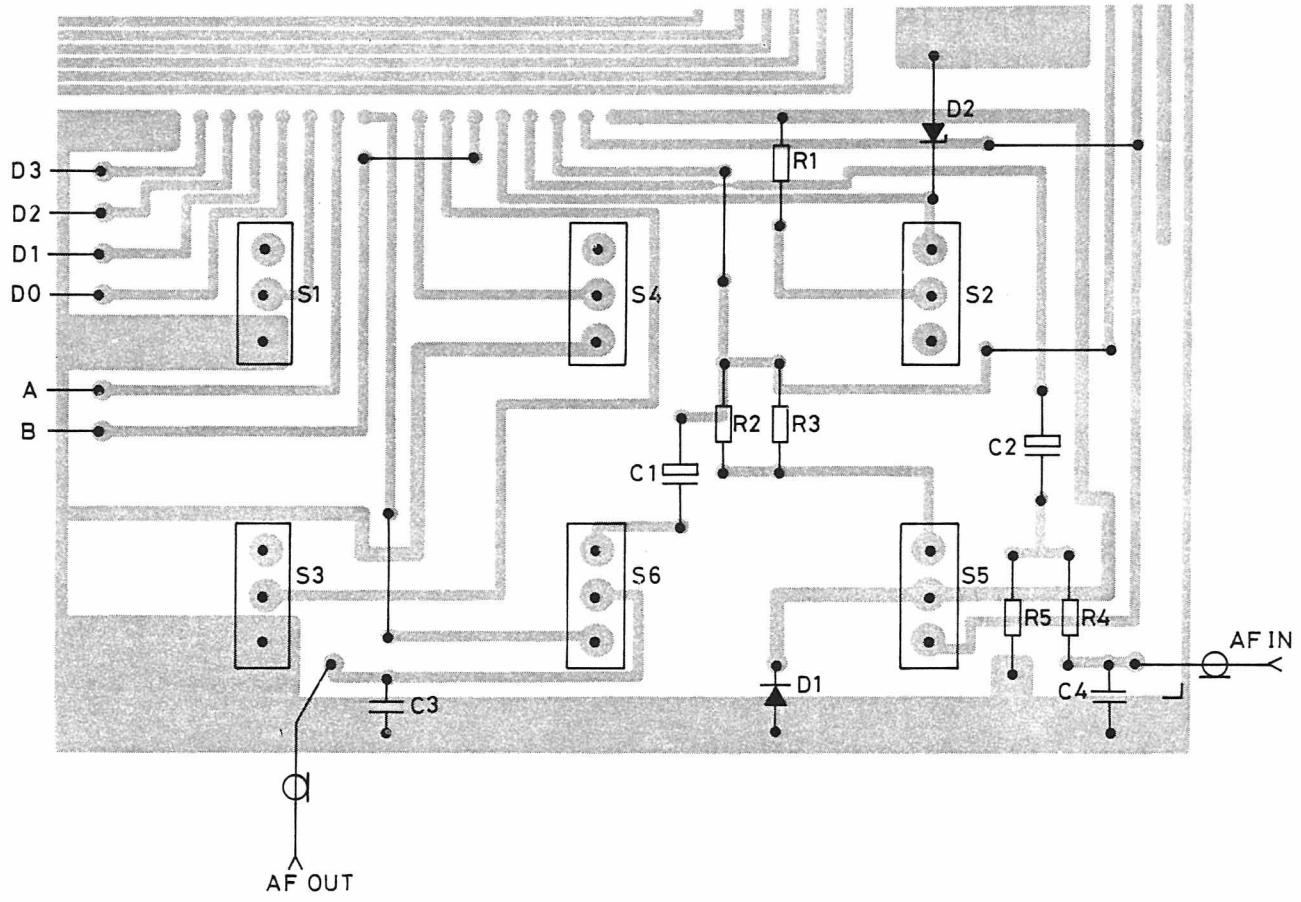

STORNOPHONE 4000
SERVICE EQUIPMENT SE4005
COMPONENT LAYOUT

CODE NO.95D5008-00 | D404.017

CHAPTER 8
TONE EQUIPMENT

- CG4001/3 CHANNEL GUARD MODULES
- TQ4001/8 TONE MODULES, 2/10 CHANNELS VERSION
- TQ4009 AUTOMATIC VERSION

CHAPTER 8.
TONE EQUIPMENT

CG4001 - CG4003 CHANNEL GUARD MODULES

TQ4001 - TQ4008 TONE MODULES

CG4001-CG4003

CHANNEL GUARD MODULES

The CG4001-4003 is a thick-film plug-in micro-module.

The module is used in connection with the control logic board CL4001 or CL4002 and divided into four circuits:
- channel guard encoder
- channel guard decoder
- Reject filters
- 5 tone encoder

The following options are available:

TYPE	OPTION	DESCRIPTION
CG4001	A	Channel guard encoder/decoder with reject filter.
CG4002	B	Channel guard encoder only
CG4003	C	Channel guard encoder/decoder with reject filter, 5 tones ZVEI/CCIR encoder.

FUNCTIONAL DESCRIPTION

CG encoder/CG decoder

These circuits can, except for the limited frequency range (67 Hz - 210.7 Hz), encode and decode sub-audible tones as specified in the EIA standard (RS-220-A). The band-pass frequency in the circuit is externally controlled by the sampling frequency, coming from the 8 bits programmable divider, situated on the CL board. Squelch Tail Elimination (STE) is implemented.

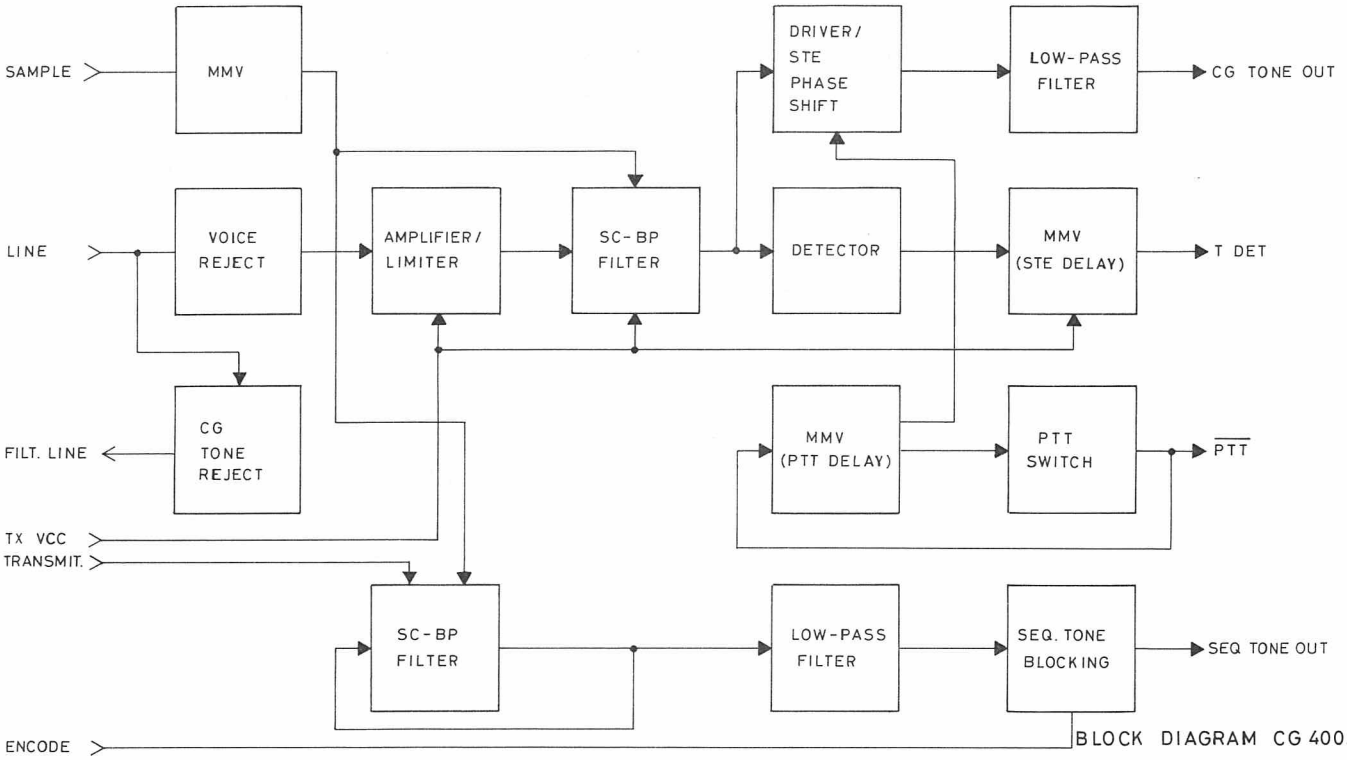

BLOCK DIAGRAM CG 400X

D403.643

Reject filters

The reject filters consist of a CG tone-reject and a voice reject. The CG tone reject filters the audio line and the voice-reject attenuates the frequencies above the sub-audible tone range.
The output is fed to the limiter in the CG decoder.

5 tones encoder

This circuit encode a sequential tone telegram according to the ZVEI, CCIR or EEA tones.
These tones are externally controlled by the sampling frequency. Therefore the sequential unit and the CG unit can not encode simultaneously.

DESCRIPTION

CG ENCODER

The Channel Guard encoder is built up around a Switch-Capacitor Band-pass filter. The band-pass frequency is controlled by a sampling frequency.
The band-pass filter is to be considered as an active filter, where two resistors and one inverting unity-gain amplifier are substituted by bilateral switches and capacitors.

A positive integrator is formed by U104, C110-C111, U103D and C106, and a negative integrator is formed by U105, C112, U103C and C114. The value of the equivalent resistors - each formed by four bilateral switches and one capacitance - is determined by the sampling frequency and the capacitor value. C110 compensates for the tolerances of the capacitors used.
C110 compensates for the deviation in the sampling frequency which is introduced when the alternative reference frequency (6.5 MHz) is used in the RF synthesizer. C110 is the only adjustable component of the filter.
The duty-cycle of the sampling pulses is changed by the monostable multivibrator (U101A), to insure sufficient charging/decharging of the capacitors (C110-C112).
The circuit built around D101 insures that the switches - controlled by Q and $\overline{Q}$ - are not ON at the same time.

In encode condition, the filter becomes self oscillating through U102B, the Q in the band-pass filter is increased by turning U102C OFF. U102D is turned ON to make the oscillator frequency equal to the band-pass center frequency. Fast start-up is made by giving a spike to the non-inverting input of U103C-D. The oscillator output is buffered by the emitter-follower (Q102), only supplied with power in TX condition. The sampling pulses are attenuated by a RC low-pass filter.

The squelch tail elimination consists of a PTT delay and a 180 degree phase shift. The Monostable Multivibrator (MMV) (Q105, Q107) making the PTT delay is triggered when the PTT button - situated on the CL-board - is released.
Thereby is Q106 turned ON and the transmitter is kept ON for approximately 160 ms.
The transistor (Q104) making the phase shift is biased via an integrator - built around Q103 - during the PTT delay.

CG DECODER

The tone to be decoded coming from the voice-reject filter is amplified/limited in U103A and then fed to the band-pass filter. The filter output passes through the comparator U103b of the detector.
When the output signal exceed the threshold level, a squarewave signal is obtained at pin 7.

When a tone is detected, U101b is trigged/retrigged by each falling edge of the signal (pin 5). Q is constant high due to the delay circuit R227/C218 thereby a constant high level is obtained at T DET.
When the T DET disappears, the multivibrator built around Q202 is trigged. This keeps T DET low for about 180 ms, which makes the squelch-tail elimination effective.

REJECT FILTERS

Voice reject filter

The voice reject filter - feeding the amplifier/limiter - is a 5th order Chebyshev low-pass filter. It prevents that the voice suppresses the CG-tone in the limiter. The filter is built up around unity gain amplifiers (U201C-D), making respectively a 3rd order and a 2nd order low-pass filter.

Tone reject filter

The CG tone-reject consists of a 3rd order high-pass filter followed by a 2nd order notch filter built around U201B and U201A respectively. They prevent the CG tone from being audible in the LS. The output signal from U201A passes through an emitter follower to feed the low impedance volume control circuit - situated on the CL board.

5 TONE ENCODER

The sequential encoder is built around the same switch capacitor band-pass filter configuration as used in the CG encoder/decoder circuit. The band-pass filter becomes self-oscillating via C311. The monostable multivibrator (U101A) - changing the duty-cycle of the pulses from the programable divider - is used in common with the CG unit.
The two sampling outputs are fed to two emitter followers, mainly because the 5 tone encoder is only supplied with power in the TX condition. Frequency fine-adjust can be done by a trimming capacitor (C306).
When ENCODE is high, the output from the switch capacitor filter is switched to pin 17 (P905B), through the analog gate (Q303) and filtered by an RC low-pass.

SPECIFICATIONS

CG ENCODER

Voltage supply
5.5 V ±0.25 V

Current consumption
1 mA ±0.2 mA

Frequency range
67 Hz - 210.7 Hz

Frequency accuracy
±0.4% (when individually adjusted)

Output level
1.4 V EMF ±0.5 dB

Output impedance
6.4 Kohm

Frequency response
±0.5 dB at 4.7 Kohm load

Distortion
less than 1.5%

PTT delay
160 ms ±20 ms

Phase shift
180 degree

CG DECODER

Voltage supply
5.5 V ±0.25 V

Current consumption
1.3 mA ±0.3 mA

Input impedance
<100 Kohm

Input response
linear

Bandwidth
±1.3% minimum
±2.2% maximum

Squelch tail elimination delay
180 ms ±20 ms

REJECT FILTERS

Voltage supply
5.5 V ±0.25 V

Current consumption
0.2 mA ±0.1 mA

Input impedance
>100 Kohm

Output impedance (CG tone-reject)
<100 ohm

Voice rejection

300 Hz	>20 dB
67 Hz - 210.7 Hz	-1 dB ±2 dB

CG tone rejection

300 Hz	-0.5 dB ±1 dB
67 Hz - 210.7 Hz	>34 dB

5 TONE ENCODER

Voltage supply
5.5 V ±0.25 V

Current consumption
5 mA ±2 mA

Frequency range
885 Hz - 2800 Hz

Frequency accuracy
±1% (when CCIR, ZVEI or EEA tones are used)

Output level
1.1 V EMF ±0.5 dB

Output impedance
17 Kohm

Frequency response
±0.5 dB at 4.7 Kohm load

Distortion
<10%

Temperature range
Operating: $-25^{o}C$ to $+60^{o}C$
Storage: $-40^{o}C$ to $+70^{o}C$

Substrate size
53 mm x 44 mm

Building height
6 mm

Weight
8-12 g

Storno

Storno

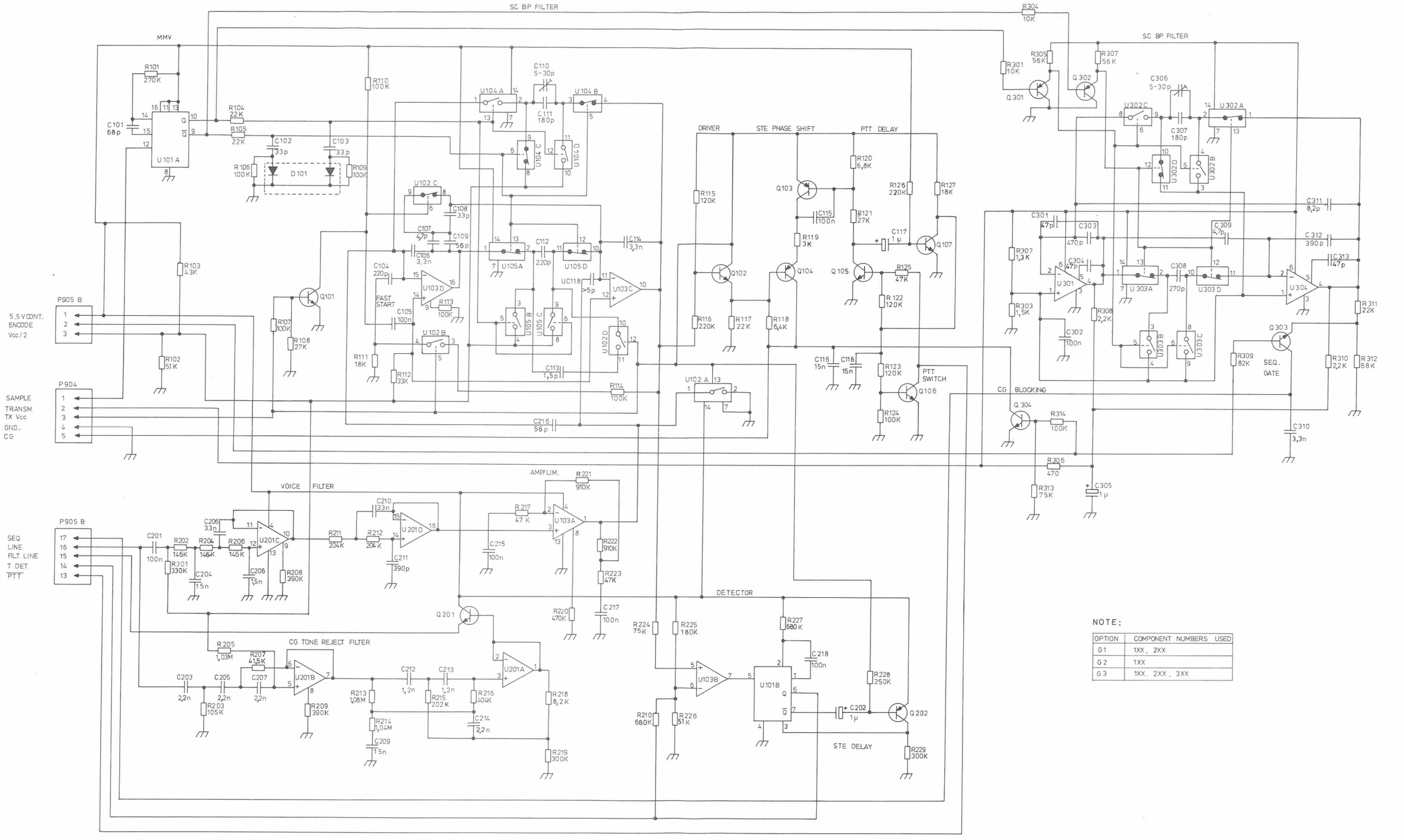

NOTE:

OPTION	COMPONENT NUMBERS USED
G1	1XX, 2XX
G2	1XX
G3	1XX, 2XX, 3XX

CODE NO:

CG4001 M905581G1
CG4002 M905581G2
CG4003 M905581G3

CHANNEL GUARD UNIT CG4001/-3

D403.560

Storno

Storno

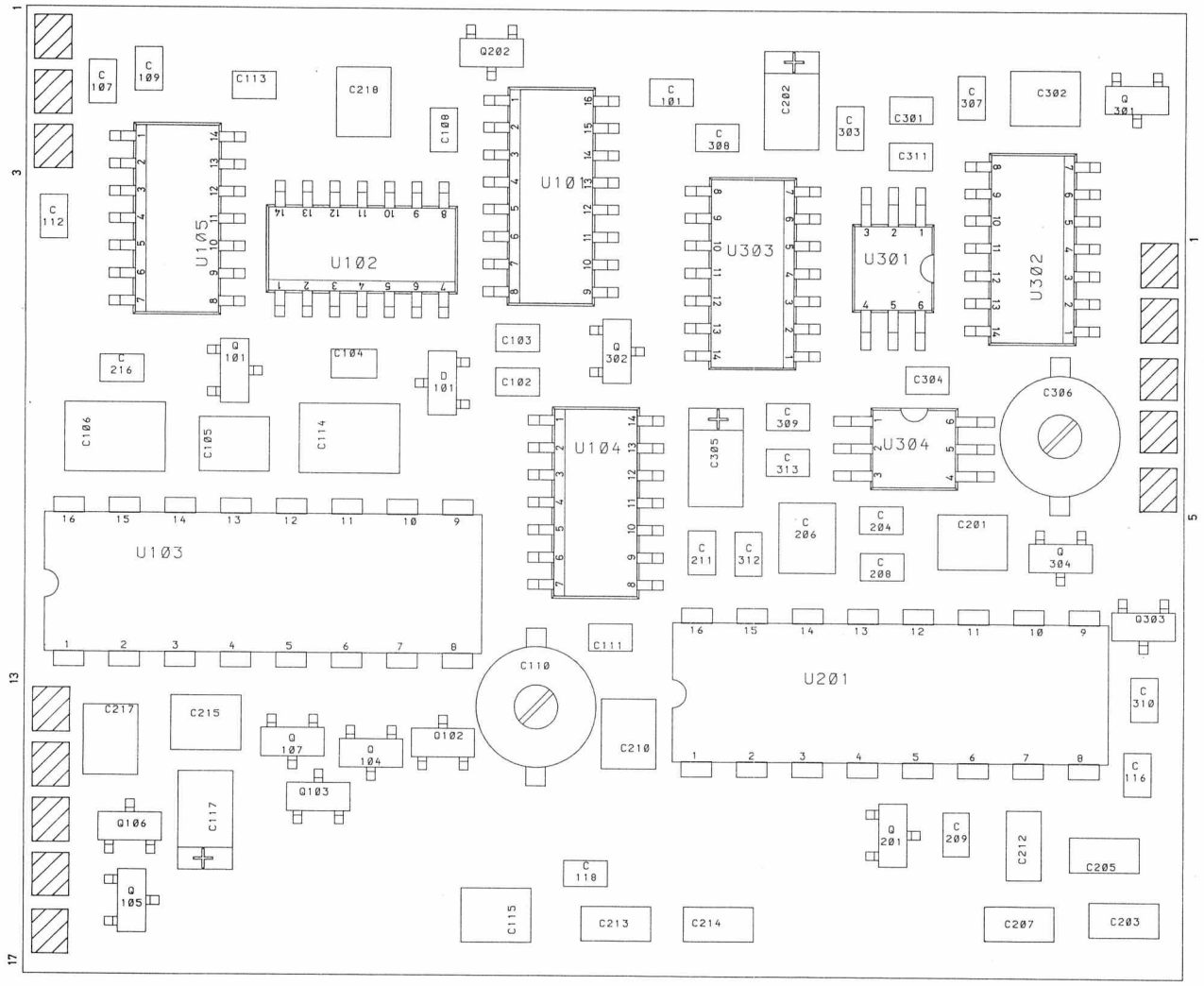

TYPE	CODE No.
CG4001	M905581G1
CG4002	M905581G2
CG4003	M905581G3

PILOT TONE UNITS: CG4001-3
COMPONENT LAYOUT

D403.647

ITEM NUMBER DESCRIPTION

M905581G1 CHAN. GUARD CG4001 , ENC./DEC./REJ.FLT

P A R T S L I S T :

CIRCUIT POSITION	ITEM NUMBER COMPONENT	DESCRIPTION COMPONENT	TOTAL QUANTITY
C101	J707436P53	CAP CER 68PF 50V	1
C102	J707436P37	CAP CER 33PF 50V	1
C103	J707436P37	CAP CER 33PF 50V	1
C104	J707436P69	CAP CER 220PF 50V	1
C105	J707438P26	CAP CER 100NF 50V	1
C106	J707349P4	CAP CER 3,3NF 50V	1
C107	J707436P9	CAP CER 4,7PF 50V	1
C108	J707436P37	CAP CER 33PF 50V	1
C109	J707363P12	CAP CER NPO 56P 2% 50V	1
C110	J707392P1	CAP VAR 5/30 PF 63V	1
C111	J707363P3	CAP CER NPO 180P 2% 50V	1
C112	J707363P4	CAP CER NPO 220P 2% 50V	1
C113	J707436P3	CAP CER 1,5PF 50V	1
C114	J707349P4	CAP CER 3,3NF 50V	1
C115	J707438P26	CAP CER 100NF 50V	1
C116	J707438P16	CAP CER 15NF 50V	1
C117	A700045P106	CAP TAN 1,0 UF 50V	1
C118	J707438P16	CAP CER 15NF 50V	1
C201	J707438P26	CAP CER 100NF 50V	1
C202	A700045P106	CAP TAN 1,0 UF 50V	1
C203	J707363P11	CAP CER NPO 2N2 2% 50V	1
C204	J707438P16	CAP CER 15NF 50V	1
C205	J707363P11	CAP CER NPO 2N2 2% 50V	1
C206	J707438P120	CAP CER 33NF 50V	1
C207	J707363P11	CAP CER NPO 2N2 2% 50V	1
C208	J707438P106	CAP CER 1,5NF 50V	1
C209	J707438P16	CAP CER 15NF 50V	1
C210	J707438P120	CAP CER 33NF 50V	1
C211	J707363P6	CAP CER NPO 390P 2% 50V	1
C212	J707363P10	CAP CER NPO 1N2 2% 50V	1
C213	J707363P10	CAP CER NPO 1N2 2% 50V	1
C214	J707363P11	CAP CER NPO 2N2 2% 50V	1
C215	J707438P26	CAP CER 100NF 50V	1
C216	J707363P12	CAP CER NPO 56P 2% 50V	1
C217	J707438P26	CAP CER 100NF 50V	1
C218	J707438P26	CAP CER 100NF 50V	1
D101	J707390P1	DIO SI SIG BAV 74	1
Q101	J707386P1	TSTR NPN SI BCW 32	1
Q102	J707386P1	TSTR NPN SI BCW 32	1
Q103	J707387P1	TSTR PNP SI BCW 30	1
Q104	J707387P1	TSTR PNP SI BCW 30	1
Q105	J707386P1	TSTR NPN SI BCW 32	1
Q106	J707386P1	TSTR NPN SI BCW 32	1
Q107	J707386P1	TSTR NPN SI BCW 32	1
Q201	J707386P1	TSTR NPN SI BCW 32	1
Q202	J707387P1	TSTR PNP SI BCW 30	1

CIRCUIT POSITION	COMPONENT ITEM NUMBER	COMPONENT DESCRIPTION	QUANTITY TOTAL
U101	J707244P2	IC DIG CMOS 4528	1
U102	J707434P3	INT CKT 4066/SO14	1
U103	J707229P1	INT CKT MC14573	1
U104	J707434P3	INT CKT 4066/SO14	1
U105	J707434P3	INT CKT 4066/SO14	1
U201	J707229P1	INT CKT MC14573	1

ITEM NUMBER	DESCRIPTION
M905581G2	CHANNEL GUARD CG4002 , ENCODE ONLY

P A R T S L I S T :

CIRCUIT POSITION	COMPONENT ITEM NUMBER	COMPONENT DESCRIPTION	QUANTITY TOTAL
C101	J707436P53	CAP CER 68PF 50V	1
C102	J707436P37	CAP CER 33PF 50V	1
C103	J707436P37	CAP CER 33PF 50V	1
C104	J707436P69	CAP CER 220PF 50V	1
C105	J707438P26	CAP CER 100NF 50V	1
C106	J707349P4	CAP CER 3,3NF 50V	1
C107	J707436P9	CAP CER 4,7PF 50V	1
C108	J707436P37	CAP CER 33PF 50V	1
C109	J707363P12	CAP CER NPO 56P 2% 50V	1
C110	J707392P1	CAP VAR 5/30 PF	1
C111	J707363P3	CAP CER NPO 180P 2% 50V	1
C112	J707363P4	CAP CER NPO 220P 2% 50V	1
C113	J707436P3	CAP CER 1,5PF 50V	1
C114	J707349P4	CAP CER 3,3NF 50V	1
C115	J707438P26	CAP CER 100NF 50V	1
C116	J707438P16	CAP CER 15NF 50V	1
C117	A700045P106	CAP TAN 1MF 50V	1
C118	J707438P16	CAP CER 15NF 50V	1
	J707363P12	CAP CER NPO 56P 2% 50V	1
D101	J707390P1	DIO SI SIG BAV 74	1
Q101	J707386P1	TSTR NPN SI BCW 32	1
Q102	J707386P1	TSTR NPN SI BCW 32	1
Q103	J707387P1	TSTR PNP SI BCW 30	1
Q104	J707387P1	TSTR PNP SI BCW 30	1
Q105	J707386P1	TSTR NPN SI BCW 32	1
Q106	J707386P1	TSTR NPN SI BCW 32	1
Q107	J707386P1	TSTR NPN SI BCW 32	1
U101	J707244P2	IC DIG CMOS 4528	1
U102	J707434P3	INT CKT 4066/SO14	1
U103	J707229P1	INT CKT MC14573	1
U104	J707434P3	INT CKT 4066/SO14	1
U105	J707434P3	INT CKT 4066/SO14	1

ITEM NUMBER M905581G3

DESCRIPTION CHAN. GUARD CG4003 , ENC./DEC./REJ.FLT + 5T ENC. ZVEI/CCIR

P A R T S L I S T :

CIRCUIT POSITION	COMPONENT ITEM NUMBER	COMPONENT DESCRIPTION	QUANTITY TOTAL
C101	J707436P53	CAP CER 68PF 50V	1
C102	J707436P37	CAP CER 33PF 50V	1
C103	J707436P37	CAP CER 33PF 50V	1
C104	J707436P69	CAP CER 220PF 50V	1
C105	J707438P26	CAP CER 100NF 50V	1
C106	J707349P4	CAP CER 3,3NF 50V	1
C107	J707436P9	CAP CER 4,7PF 50V	1
C108	J707436P37	CAP CER 33PF 50V	1
C109	J707363P12	CAP CER NPO 56P 2% 50V	1
C110	J707392P1	CAP VAR 5/30 PF	1
C111	J707363P3	CAP CER NPO 180P 2% 50V	1
C112	J707363P4	CAP CER NPO 220P 2% 50V	1
C113	J707436P3	CAP CER 1,5PF 50V	1
C114	J707349P4	CAP CER 3,3NF 50V	1
C115	J707438P26	CAP CER 100NF 50V	1
C116	J707438P16	CAP CER 15NF 50V	1
C117	A700045P106	CAP TAN 1MF 50V	1
C118	J707438P16	CAP CER 15NF 50V	1
C201	J707438P26	CAP CER 100NF 50V	1
C202	A700045P106	CAP TAN 1MF 50V	1
C203	J707363P11	CAP CER NPO 2N2 2% 50V	1
C204	J707438P16	CAP CER 15NF 50V	1
C205	J707363P11	CAP CER NPO 2N2 2% 50V	1
C206	J707438P120	CAP CER 33NF 50V	1
C207	J707363P11	CAP CER NPO 2N2 2% 50V	1
C208	J707438P106	CAP CER 1,5NF 50V	1
C210	J707438P120	CAP CER 33NF 50V	1
C211	J707363P6	CAP CER NPO 390P 2% 50V	1
C212	J707363P10	CAP CER NPO 1N2 2% 50V	1
C213	J707363P10	CAP CER NPO 1N2 2% 50V	1
C214	J707363P11	CAP CER NPO 2N2 2% 50V	1
C215	J707438P26	CAP CER 100NF 50V	1
C216	J707363P12	CAP CER NPO 56P 2% 50V	1
C217	J707438P26	CAP CER 100NF 50V	1
C218	J707438P26	CAP CER 100NF 50V	1
C301	J707436P45	CAP CER 47PF 50V	1
C302	J707438P26	CAP CER 100NF 50V	1
C303	J707363P7	CAP CER NPO 470P 2% 50V	1
C304	J707436P45	CAP CER 47PF 50V	1
C305	A700045P106	CAP TAN 1MF 50V	1
C306	J707392P1	CAP VAR 5/30 PF	1
C307	J707363P3	CAP CER NPO 180P 2% 50V	1
C308	J707363P5	CAP CER NPO 270P 2% 50V	1
C309	J707436P9	CAP CER 4,7PF 50V	1
C310	J707438P8	CAP CER 3,3NF 50V	1
C311	J707436P12	CAP CER 8,2PF 50V	1
C312	J707363P6	CAP CER NPO 390P 2% 50V	1
C313	J707436P45	CAP CER 47PF 50V	1

CIRCUIT POSITION	COMPONENT ITEM NUMBER	COMPONENT DESCRIPTION	QUANTITY
D101	J707390P1	DIO SI SIG BAV 74	1
Q101	J707386P1	TSTR NPN SI BCW 32	1
Q102	J707386P1	TSTR NPN SI BCW 32	1
Q103	J707387P1	TSTR PNP SI BCW 30	1
Q104	J707387P1	TSTR PNP SI BCW 30	1
Q105	J707386P1	TSTR NPN SI BCW 32	1
Q106	J707386P1	TSTR NPN SI BCW 32	1
Q107	J707386P1	TSTR NPN SI BCW 32	1
Q201	J707386P1	TSTR NPN SI BCW 32	1
Q202	J707387P1	TSTR PNP SI BCW 30	1
Q301	J707387P1	TSTR PNP SI BCW 30	1
Q302	J707387P1	TSTR PNP SI BCW 30	1
Q303	J707386P1	TSTR NPN SI BCW 32	1
Q304	J707386P1	TSTR NPN SI BCW 32	1
U101	J707244P2	IC DIG CMOS 4528	1
U102	J707434P3	INT CKT 4066/SO14	1
U103	J707229P1	INT CKT MC14573	1
U104	J707434P3	INT CKT 4066/SO14	1
U105	J707434P3	INT CKT 4066/SO14	1
U201	J707229P1	INT CKT MC14573	1
U301	J706465P1	TAA 865 W	1
U302	J707434P3	INT CKT 4066/SO14	1
U303	J707434P3	INT CKT 4066/SO14	1
U304	J706465P1	TAA 865 W	1

TQ4001 - TQ4008

TONE MODULES

The TQ4001-4008 is a thick-film plug-in micro-module.

The module is used in connection with the control logic board - CL4001 and divided into three circuits:

- 5T encoder/decoder
- Group-call decoder
- CTCSS encoder (channel gurad)

The following options are available:

TYPE	OPTION	DESCRIPTION
TQ4001	A	5T ZVEI/CCIR enc./dec.
TQ4002	B	5T ZVEI/CCIR enc./dec. with Group-call decoder 885/970 Hz.
TQ4003	C	5T ZVEI/CCIR enc./dec. with Group-call decoder 2400/2800 Hz.
TQ4004	D	5T EEA enc./dec. with Group-call decoder 1055 Hz.
TQ4005	E	5T ZVEI/CCIR enc./dec. with Group-call decoder 885/970 Hz + CTCSS encoder (channel guard).
TQ4006	F	5T ZVEI/CCIR enc./dec. with Group-call decoder 2400/2800 Hz CTCSS encoder (channel guard).
TQ4007	G	5T EEA enc./dec. with Group-call dec. 1055 Hz + CTCSS enc. (channel guard).
TQ4008	H	5T ZVEI/CCIR enc./dec. with group-call decoder 1981 Hz.

FUNCTIONAL DESCRIPTION

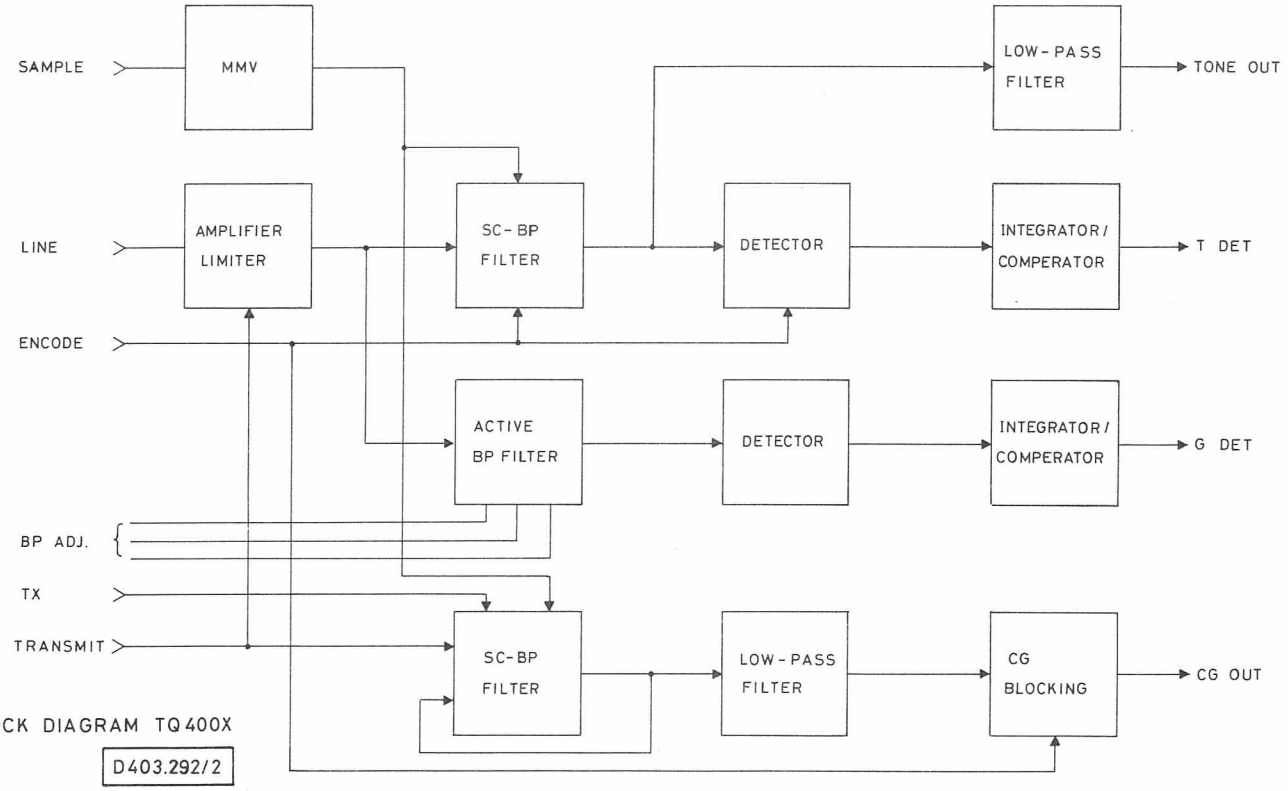

BLOCK DIAGRAM TQ400X

D403.292/2

The TQ can only be used in connection with CL4001 or a similar board, which samples the unit, controls the transmitter and handles the detect outputs.

5 Tones encoder/decoder

This circuit is a 5 tone sequencial encoder/decoder, in which the ZVEI, CCIR or EEA tones can be used. The band-pass (BP) frequency in the circuit is externally controlled by the sampling frequency, coming from an 8 bit programmable divider, situated on the CL board. The tone timing is controlled too by the CL.

Group call decoder

This circuit decodes a single tone. The BP frequency is adjusted by means of a strap and a potentiometer situated on the CL board.

CTCSS encoder (channel guard)

This circuit generates the sub-audible tones specified in the EEA standard. These tones are externally controlled by the sampling frequency. Therefore the CTCSS unit and the sequential unit can not encode simultaneously.

CIRCUIT DESCRIPTION

5 Tones encoder/decoder

The sequential encoder/decoder is built around a switch-capacitor (SC) band-pass (BP) filter.

The configuration used is to be considered as an active filter where two resistors and one inverting unity-gain amplifier are substituted by bilateral switches and capacitors. A positive integrator is formed by U104, C113-C114, U103D and C109, and a negative integrator is formed by U105, C112, U103C and C116-117. The value of the equivalent resistors - each formed by four bilateral switches and one capacitance - is determined by the sampling frequency and the capacitor value. C113 compensates for the tolerances of the capacitors used. C113 is the only adjustable component of the filter.
The duty-cycle of the sampling pulses is changed by U101A (monostable multivibrator).
The tone received is amplified/limited from line level and fed through the band-pass filter to a passive low-pass filter. This signal is fed via a comparator (U103B) in the detector (U101B). A square wave signal is obtained at pin. 7 when the signal exceeds the threshold level. If the retriggerable monostable multivibrator (U101B) is trigged/retrigged in every period of the tone, the capacitor in the integrator starts charging and a tone detect output is obtained (T.DET).

In encode condition the filter becomes self-oscillating through U102B and the Q in the band-pass filter is increased by turning U102C off. The oscillator output is filtered in a passive RC low-pass net work. This output (pin. 17) is fed to the limiter in the TX audio processor, situated on the control board.

Group-call decoder

In the group-call assemblies, the capacitor values in the active 2nd -order band-pass filter are changed. The BP center frequency is adjusted by a strap and a potentiometer.
The strap is a coarse - adjustment of the frequency and selects the high tone in option B, C, E, F and H.
By disconnecting pin 8 (P904) the strap is eliminated. The potentiometer fine adjusts the filter.

The input to the active filter is taken from the same amplifier/limiter used in the sequential unit. The rectified band-pass filter output is fed to a comparator - build around U201A. When the rectified level of U201A is higher than the threshold, the output of U201A goes low, the capacitor in the integrator starts charging, and a group detect output is present (G.DET).

CTCSS encoder (channel guard)

The center frequency of the self-oscillating SC (Switched Capacitor) filter is external controlled by the same divider as used in the sequential unit. The monostable multivibrator (U101A) changes the duty-cycle of the pulses from the programmable divider and is used in common with the sequential unit. The two sampling outputs are buffered by two emitter followers Q302-Q303.

The frequency is fine-adjusted by a trimming capacitor (C305).
The output from the SC filter is filtered by a passive LP network before being fed at pin 5.
A transistor Q305 is inserted across the output to shorten the oscillator signal when the sequential tones are encoded. An RC circuit and a transistor, C302-R309-Q304 is used to minimize the rise time of the amplitude. The circuit injects a "fast start" spike into the non inserting input of U301.

TECHNICAL SPECIFICATIONS

5 TONES ENCODER/DECODER

Voltage supply
5.5 V ±0.25 V

Current consumption
1.4 mA ±0.2 mA

Frequency range
885 - 2800 Hz

Frequency accuracy
±1% (when CCIR, ZVEI, or EEA tones are used)

Output level
1.7 V EMF ±0.5 dB

Output impedance
43 Kohm

Frequency response
±0.5 dB at 8.2 Kohm load

Distortion
<10%

Input impedance
>200 Kohm

Input response
linear

Input activating level
110 mV ±6 dB

Selectivity
The unit is not sensitive to adjacent tones or other tones in the same standard series.

Attack time

ZVEI/CCIR:	<30 ms, >20 ms
EEA:	<22 ms, >12 ms

Signal to noise conditions
(to obtain 95% acceptance of 5 tones telegrams)

ZVEI/CCIR:	4 dB SINAD (static)
EEA:	5.5 dB SINAD (static) (Measured on the audio-line in CQP4000)

Detect output
Open collector - PNP (high when detect)

GROUP-CALL DECODER

Voltage supply
5.5 V ±0.25 V

Current consumption
0.4 mA ±0.1 mA

Frequency accuracy
±1%

Frequencies
885/970 Hz or 1055 Hz or 2400/2800 Hz or 1981 Hz

Attack time
ZVEI/CCIR: <30 ms >20 ms
EEA: <22 ms >12 ms

Detect output
Open collector - PNP (high when detect)

CTCSS ENCODER (CHANNEL GUARD)

Voltage supply
5.5 V ±0.25 V

Current consumption
7 mA ±2 mA

Frequency range
67.0 - 250.3 Hz (individually adjusted)

Frequency accuracy
±0.4%

Output level
1.6 V EMF ±0.5 dB

Output impedance
22 Kohm

Frequency response
±0.5 dB at 4.7 Kohm load

Distortion
<1%

Temperature range
$-25^{o}C$ to $+60^{o}C$

ADJUSTMENT OF TONEMODULE

CQP4000

The tone module is available in different versions as tabulated below:

TYPE	TONE SYSTEM	CODE	ENC	DEC	GRP+	CG
TQ4001	ZVEI/CCIR	M905368G1	×	×		
TQ4002	ZVEI/CCIR	M905368G2	×	×	×	
TQ4003	ZVEI/CCIR	M905368G3	×	×	×	
TQ4004	EEA	M905368G4	×	×	×	
TQ4005	ZVEI/CCIR	M905368G5	×	×	×	×
TQ4006	ZVEI/CCIR	M905368G6	×	×	×	×
TQ4007	EEA	M905368G7	×	×	×	×
TQ4008	ZVEI/CCIR	M905368G8	×	×	×	

+The GRP option requires the group tone to be strapped on the TQ4000 module to one of the following tones: 885/970 Hz, 2400/2800 Hz, or 1055 Hz.

Connect the deviation meter to the signal sampler and an AF counter to the deviation meter's AF output.
Don't apply external modulation to the radio.

The following procedure sets up the tone test mode:

1. Turn radio OFF
2. Set KEY to RX
3. Set EN to OFF
4. Set TONE to ON
5. Turn radio ON
6. Set TONE to OFF
7. Set KEY to TX
8. Set TONE to ON
9. Set EN to ON

The radio will now be in transmit mode and continuously modulated with a frequency which is the first tone of the tone receiver telegram code.

Check the deviation for being from 70-100% of maximum system deviation.

CQP4xx2: ±3.5-5.0 kHz
CQP4xx3: ±2.8-4.0 kHz
CQP4xx4: ±1.75-2.5 kHz

Read the frequency at the AF output of the deviation meter.

The frequency should be the first tone of the decoder code.

Adjust, if necessary, the frequency with C113 on the TQ400x board for correct frequency according to the following table.

CCIR-EEA		ZVEI	
Nominal freq. Hz	Adjustment Freq. Hz	Nominal Freq. Hz	Adjustment Freq. Hz
1124	1120.6	1060	1057.9
1197	1202.1	1160	1159.9
1275	1271.5	1270	1271.5
1358	1363.2	1400	1406.7
1446	1453.1	1530	1537.6
1540	1537.6	1670	1673.8
1640	1632.5	1830	1836.5
1747	1739.9	2000	2003.5
1860	1862.4	2200	2203.9
1981	1973.6	2400	2404.2
2110	2098.9	2600	2592.8
2247	2241.2	2800	2813.4
1055	1057.9	885	887.5
		970	972.3

CHANNEL GUARD TONE ADJUSTMENT

Connect the deviation meter to the signal sampler and an AF counter to the deviation meter's AF output. Don't apply external modulation to the radio.
Set ENC switch to OFF.
Set TONE switch to OFF.
Set KEY switch to TX.

Adjust R824 on CL4001 for specified deviation.

Read the frequency at the AF output of the deviation meter.

Adjust C305 on the TQ400x module for specified channel guard tone.

Tolerance: f_{CG} ±0.015 Hz

ALL CALL ADJUSTMENT

When ALL CALL is programmed the TQ-module must be modified. Capacitor C209 is removed and replaced by an electrolytic capacitor 10 uF/ 6 V, part nr. A700045P3; refer to D403.283 for location and polarization.

GROUP TONE FREQUENCY ADJUSTMENT

Connect the signal generator to the antenna input. Modulate the generator with an external Tone test set e.g. TSG13 set to the group tone frequency so that a deviation of 33% of maximum system deviation is obtained.

CQP4xx2: ±1.65 kHz
CQP4xx3: ±1.32 kHz
CQP4xx4: ±0.825 kHz

Group tones:

885 Hz
970 Hz
1055 Hz
2400 Hz
2800 Hz
1981 Hz (special).

Modulation level - 47 dBm

Connect a AF voltmeter to the AF OUT.

Connect a voltmeter to TP201 on the TQ400x board.

Read the AF line level (AF OUT).
AF out= 35 mV ±5 mV.

Adjust R821 on the CL4001 board for maximum voltage on the multimeter (5 V p.p ±0.5 V).

Storno

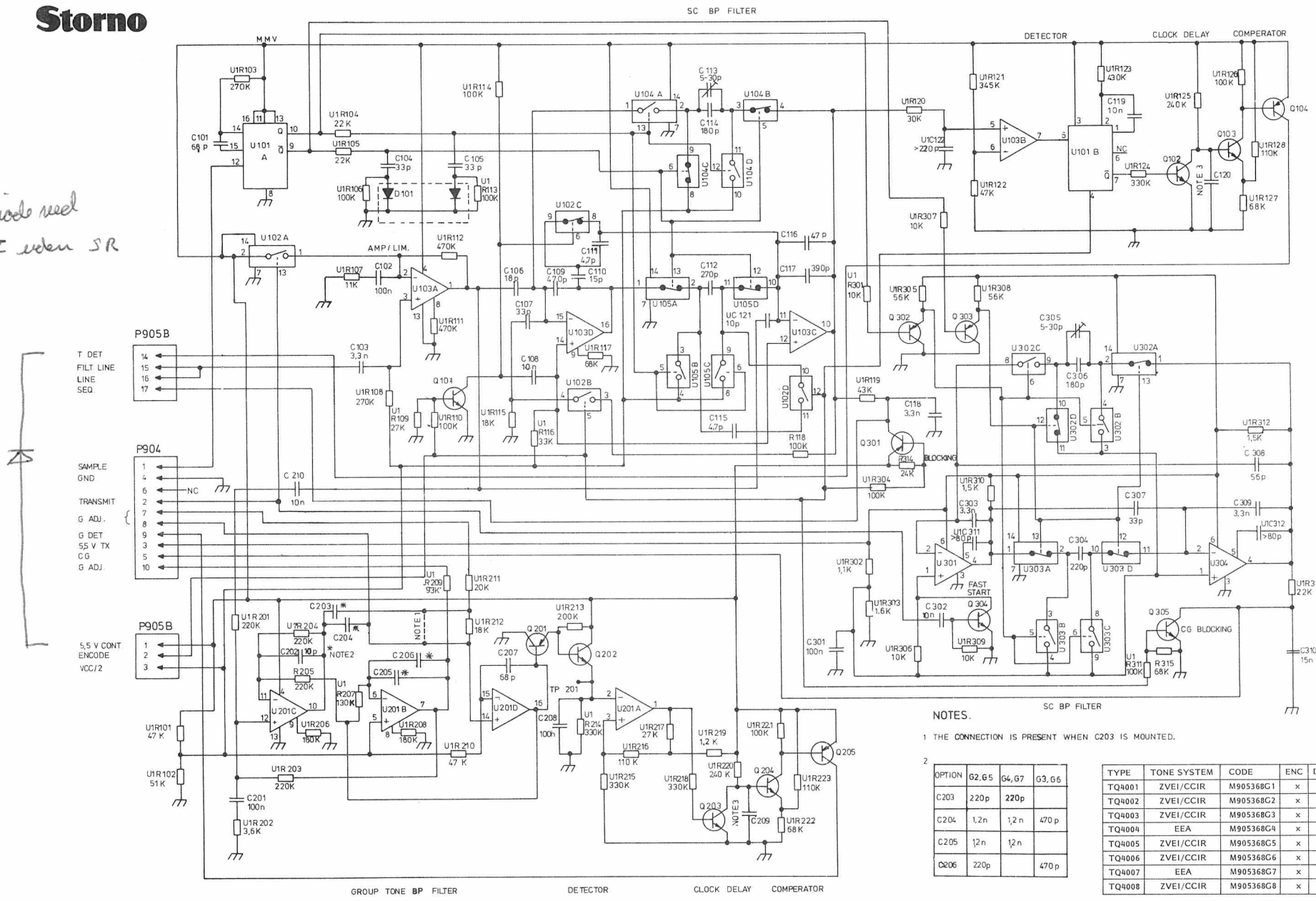

diode reel
ST eden SR

NOTES.

1 THE CONNECTION IS PRESENT WHEN C203 IS MOUNTED.

2

OPTION	G2,G5	G4,G7	G3,G6
C203	220p	220p	
C204	1,2n	1,2n	470p
C205	1,2n	1,2n	
C206	220p		470p

3

OPTION	G 2,3,5,6,8	G 4,7	G1
C120	100n	47n	100n
C209	100n	47n	

TYPE	TONE SYSTEM	CODE	ENC	DEC	GRP TONE - Hz	CG
TQ4001	ZVEI/CCIR	M905368G1	x	x		
TQ4002	ZVEI/CCIR	M905368G2	x	x	885/970	
TQ4003	ZVEI/CCIR	M905368G3	x	x	2400/2800	
TQ4004	EEA	M905368G4	x	x	1055	
TQ4005	ZVEI/CCIR	M905368G5	x	x	885/970	x
TQ4006	ZVEI/CCIR	M905368G6	x	x	2400/2800	x
TQ4007	EEA	M905368G7	x	x	1055	x
TQ4008	ZVEI/CCIR	M905368G8	x	x	1981	

TONE MODULE TQ4000

D403.303/2

Storno

Storno

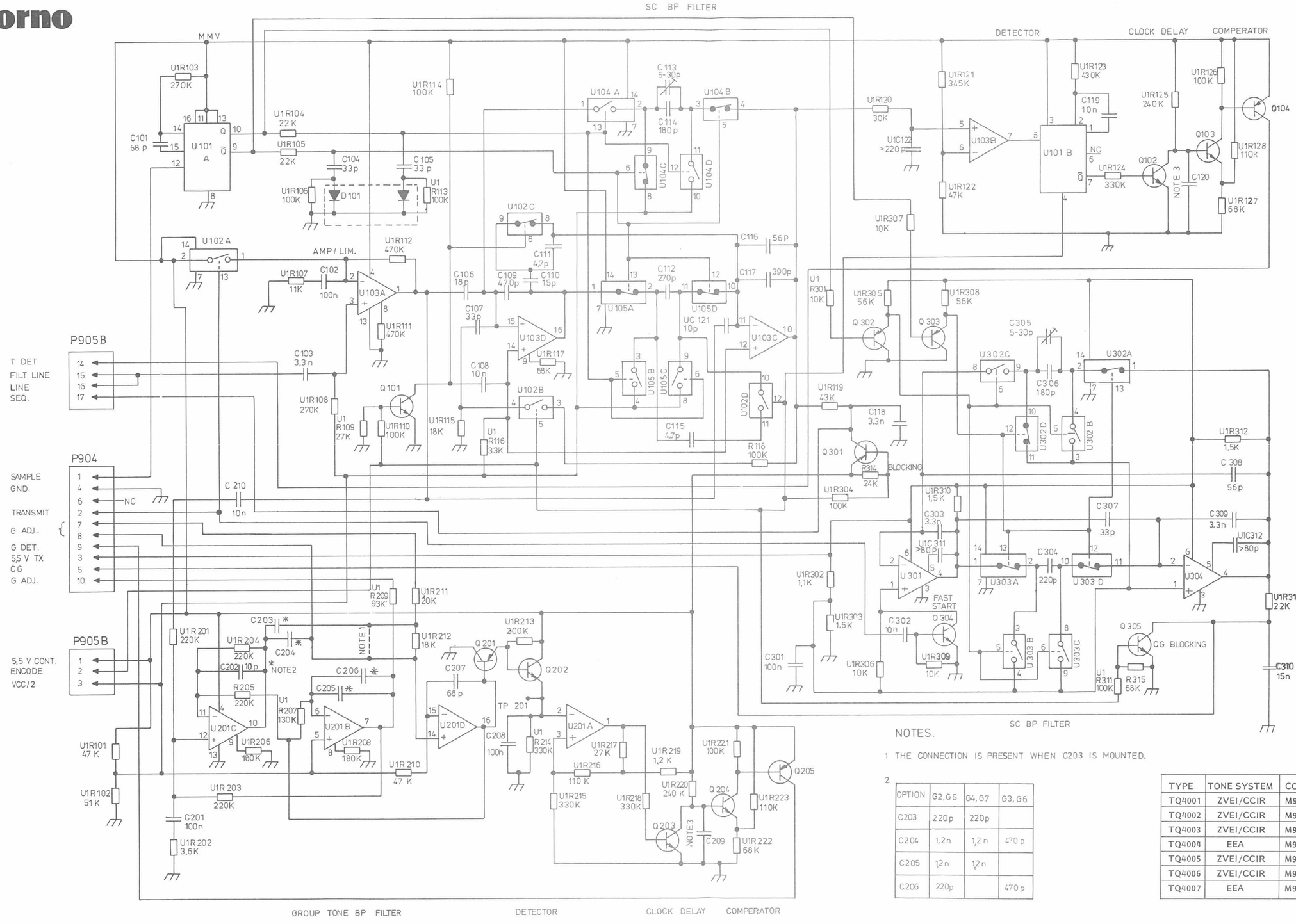

NOTES.

1 THE CONNECTION IS PRESENT WHEN C203 IS MOUNTED.

2

OPTION	G2, G5	G4, G7	G3, G6
C203	220p	220p	
C204	1,2n	1,2n	470p
C205	12n	12n	
C206	220p		470p

3

OPTION	G 2,3,5,6	G 4,7	G1
C120	100n	47n	100n
C209	100n	47n	

TYPE	TONE SYSTEM	CODE	ENC	DEC	GRP+	CG
TQ4001	ZVEI/CCIR	M905368G1	x	x		
TQ4002	ZVEI/CCIR	M905368G2	x	x	x	
TQ4003	ZVEI/CCIR	M905368G3	x	x	x	
TQ4004	EEA	M905368G4	x	x	x	
TQ4005	ZVEI/CCIR	M905368G5	x	x	x	x
TQ4006	ZVEI/CCIR	M905368G6	x	x	x	x
TQ4007	EEA	M905368G7	x	x	x	x

TONE MODULE TQ4000

D403.303

Storno

Storno

diode rod.
STuden JR

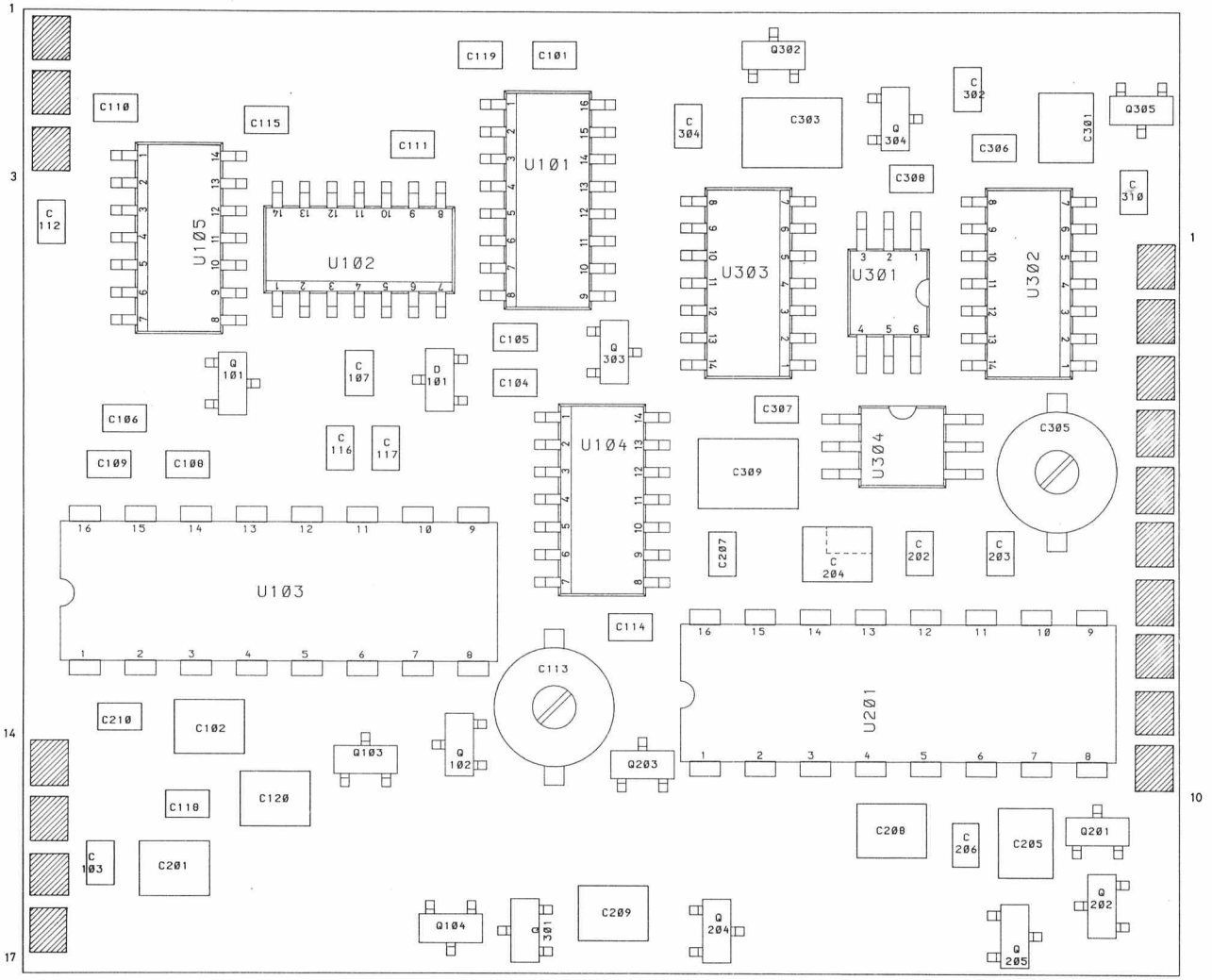

TYPE	CODE No.
TQ4001	M905368G1
TQ4002	M905368G2
TQ4003	M905368G3
TQ4004	M905368G4
TQ4005	M905368G5
TQ4006	M905368G6
TQ4007	M905368G7
TQ4008	M905368G8

SEQ. TONE UNITS: TQ 4001-8
COMPONENT LAYOUT

D403.646

ITEM NUMBER	DESCRIPTION
M905368G1	TQ4001

P A R T S L I S T :

CIRCUIT POSITION	COMPONENT ITEM NUMBER	COMPONENT DESCRIPTION	QUANTITY TOTAL
C101	J707436P53	CAP CER 68PF 50V	1
C102	J707438P26	CAP CER 100NF 50V	1
C103	J707438P8	CAP CER 3,3NF 50V	1
C104	J707436P37	CAP CER 33PF 50V	1
C105	J707436P37	CAP CER 33PF 50V	1
C106	J707363P2	CAP CER 18PF 50V	1
C107	J707436P37	CAP CER 33PF 50V	1
C108	J707438P14	CAP CER 10NF 50V	1
C109	J707363P7	CAP CER 470PF 50V	1
C110	J707363P1	CAP CER 15PF 50V	1
C111	J707436P9	CAP CER 4,7PF 50V	1
C112	J707363P5	CAP CER 270PF 50V	1
C113	J707392P1	CAP VAR 5/30 PF	1
C114	J707363P3	CAP CER 180PF 50V	1
C115	J707436P9	CAP CER 4,7PF 50V	1
C116	J707436P45	CAP CER 47PF 50V	1
C117	J707363P6	CAP CER 390PF 50V	1
C118	J707438P8	CAP CER 3,3NF 50V	1
C119	J707438P14	CAP CER 10NF 50V	1
C120	J707438P26	CAP CER 100NF 50V	1
D101	J707390P1	DIO SI BAV 70	1
Q101	J707386P1	TSTR BCW 32	1
Q102	J707386P1	TSTR BCW 32	1
Q103	J707386P1	TSTR BCW 32	1
Q104	J707387P1	TSTR BCW 30	1
U101	J707244P2	INT CKT 4528/SO16	1
U102	J707434P3	INT CKT 4066/SO14	1
U103	J707229P1	INT CKT MC14573	1
U104	J707434P3	INT CKT 4066/SO14	1
U105	J707434P3	INT CKT 4066/SO14	1

ITEM NUMBER	DESCRIPTION
M905368G2	TQ4002

P A R T S L I S T :

CIRCUIT POSITION	COMPONENT ITEM NUMBER	COMPONENT DESCRIPTION	QUANTITY TOTAL
C101	J707436P53	CAP CER 68PF 50V	1
C102	J707438P26	CAP CER 100NF 50V	1
C103	J707438P8	CAP CER 3,3NF 50V	1
C104	J707436P37	CAP CER 33PF 50V	1
C105	J707436P37	CAP CER 33PF 50V	1
C106	J707363P2	CAP CER 18PF 50V	1
C107	J707436P37	CAP CER 33PF 50V	1
C108	J707438P14	CAP CER 10NF 50V	1
C109	J707363P7	CAP CER 470PF 50V	1
C110	J707363P1	CAP CER 15PF 50V	1
C111	J707436P9	CAP CER 4,7PF 50V	1
C112	J707363P5	CAP CER 270PF 50V	1
C113	J707392P1	CAP VAR 5/30 PF	1
C114	J707363P3	CAP CER 180PF 50V	1
C115	J707436P9	CAP CER 4,7PF 50V	1
C116	J707436P45	CAP CER 47PF 50V	1
C117	J707363P6	CAP CER 390PF 50V	1
C118	J707438P8	CAP CER 3,3NF 50V	1
C119	J707438P14	CAP CER 10NF 50V	1
C120	J707438P26	CAP CER 100NF 50V	1
C201	J707438P26	CAP CER 100NF 50V	1
C202	J707436P13	CAP CER 10PF 50V	1
C203	J707436P69	CAP CER 220PF 50V	1
C204	J707363P8	CAP CER 1,2NF 50V	1
C205	J707363P8	CAP CER 1,2NF 50V	1
C206	J707436P69	CAP CER 220PF 50V	1
C207	J707436P53	CAP CER 68PF 50V	1
C208	J707438P26	CAP CER 100NF 50V	1
C209	J707438P26	CAP CER 100NF 50V	1
C210	J707438P14	CAP CER 10NF 50V	1
D101	J707390P1	DIO SI BAV 70	1
Q101	J707386P1	TSTR BCW 32	1
Q102	J707386P1	TSTR BCW 32	1
Q103	J707386P1	TSTR BCW 32	1
Q104	J707387P1	TSTR BCW 30	1
Q201	J707387P1	TSTR BCW 30	1
Q202	J707386P1	TSTR BCW 32	1
Q203	J707386P1	TSTR BCW 32	1
Q204	J707386P1	TSTR BCW 32	1
Q205	J707387P1	TSTR BCW 30	1
U101	J707244P2	INT CKT 4528/SO16	1
U102	J707434P3	INT CKT 4066/SO14	1
U103	J707229P1	INT CKT MC14573	1
U104	J707434P3	INT CKT 4066/SO14	1
U105	J707434P3	INT CKT 4066/SO14	1
U201	J707229P1	INT CKT MC14573	1

ITEM NUMBER	DESCRIPTION
M905368G3	TQ4003

P A R T S L I S T :

CIRCUIT POSITION	COMPONENT ITEM NUMBER	COMPONENT DESCRIPTION	QUANTITY TOTAL
C101	J707436P53	CAP CER 68PF 50V	1
C102	J707438P26	CAP CER 100NF 50V	1
C103	J707438P8	CAP CER 3,3NF 50V	1
C104	J707436P37	CAP CER 33PF 50V	1
C105	J707436P37	CAP CER 33PF 50V	1
C106	J707363P2	CAP CER 18PF 50V	1
C107	J707436P37	CAP CER 33PF 50V	1
C108	J707438P14	CAP CER 10NF 50V	1
C109	J707363P7	CAP CER 470PF 50V	1
C110	J707363P1	CAP CER 15PF 50V	1
C111	J707436P9	CAP CER 4,7PF 50V	1
C112	J707363P5	CAP CER 270PF 50V	1
C113	J707392P1	CAP VAR 5/30 PF	1
C114	J707363P3	CAP CER 180PF 50V	1
C115	J707436P9	CAP CER 4,7PF 50V	1
C116	J707436P45	CAP CER 47PF 50V	1
C117	J707363P6	CAP CER 390PF 50V	1
C118	J707438P8	CAP CER 3,3NF 50V	1
C119	J707438P14	CAP CER 10NF 50V	1
C120	J707438P26	CAP CER 100NF 50V	1
C201	J707438P26	CAP CER 100NF 50V	1
C202	J707436P13	CAP CER 10PF 50V	1
C204	J707363P7	CAP CER 470PF 50V	1
C206	J707363P7	CAP CER 470PF 50V	1
C207	J707436P53	CAP CER 68PF 50V	1
C208	J707438P26	CAP CER 100NF 50V	1
C209	J707438P26	CAP CER 100NF 50V	1
C210	J707438P14	CAP CER 10NF 50V	1
D101	J707390P1	DIO SI BAV 70	1
Q101	J707386P1	TSTR BCW 32	1
Q102	J707386P1	TSTR BCW 32	1
Q103	J707386P1	TSTR BCW 32	1
Q104	J707387P1	TSTR BCW 30	1
Q201	J707387P1	TSTR BCW 30	1
Q202	J707386P1	TSTR BCW 32	1
Q203	J707386P1	TSTR BCW 32	1
Q204	J707386P1	TSTR BCW 32	1
Q205	J707387P1	TSTR BCW 30	1
U101	J707244P2	INT CKT 4528/SO16	1
U102	J707434P3	INT CKT 4066/SO14	1
U103	J707229P1	INT CKT MC14573	1
U104	J707434P3	INT CKT 4066/SO14	1
U105	J707434P3	INT CKT 4066/SO14	1
U201	J707229P1	INT CKT MC14573	1

ITEM NUMBER	DESCRIPTION
M905368G4	TQ4004

P A R T S L I S T :

CIRCUIT POSITION	COMPONENT ITEM NUMBER	COMPONENT DESCRIPTION	QUANTITY TOTAL
C101	J707436P53	CAP CER 68PF 50V	1
C102	J707438P26	CAP CER 100NF 50V	1
C103	J707438P8	CAP CER 3,3NF 50V	1
C104	J707436P37	CAP CER 33PF 50V	1
C105	J707436P37	CAP CER 33PF 50V	1
C106	J707363P2	CAP CER 18PF 50V	1
C107	J707436P37	CAP CER 33PF 50V	1
C108	J707438P14	CAP CER 10NF 50V	1
C109	J707363P7	CAP CER 470PF 50V	1
C110	J707363P1	CAP CER 15PF 50V	1
C111	J707436P9	CAP CER 4,7PF 50V	1
C112	J707363P5	CAP CER 270PF 50V	1
C113	J707392P1	CAP VAR 5/30 PF	1
C114	J707363P3	CAP CER 180PF 50V	1
C115	J707436P9	CAP CER 4,7PF 50V	1
C116	J707436P45	CAP CER 47PF 50V	1
C117	J707363P6	CAP CER 390PF 50V	1
C118	J707438P8	CAP CER 3,3NF 50V	1
C119	J707438P14	CAP CER 10NF 50V	1
C120	J707438P22	CAP CER 47NF 50V	1
C201	J707438P26	CAP CER 100NF 50V	1
C202	J707436P13	CAP CER 10PF 50V	1
C203	J707436P69	CAP CER 220PF 50V	1
C204	J707363P8	CAP CER 1,2NF 50V	1
C205	J707363P8	CAP CER 1,2NF 50V	1
C207	J707436P53	CAP CER 68PF 50V	1
C208	J707438P26	CAP CER 100NF 50V	1
C209	J707438P22	CAP CER 47NF 50V	1
C210	J707438P14	CAP CER 10NF 50V	1
D101	J707390P1	DIO SI BAV 70	1
Q101	J707386P1	TSTR BCW 32	1
Q102	J707386P1	TSTR BCW 32	1
Q103	J707386P1	TSTR BCW 32	1
Q104	J707387P1	TSTR BCW 30	1
Q201	J707387P1	TSTR BCW 30	1
Q202	J707386P1	TSTR BCW 32	1
Q203	J707386P1	TSTR BCW 32	1
Q204	J707386P1	TSTR BCW 32	1
Q205	J707387P1	TSTR BCW 30	1
U101	J707244P2	INT CKT 4528/SO16	1
U102	J707434P3	INT CKT 4066/SO14	1
U103	J707229P1	INT CKT MC14573	1
U104	J707434P3	INT CKT 4066/SO14	1
U105	J707434P3	INT CKT 4066/SO14	1
U201	J707229P1	INT CKT MC14573	1

ITEM NUMBER DESCRIPTION

M905368G5 TQ4005

P A R T S L I S T

CIRCUIT POSITION	COMPONENT ITEM NNUMBER	COMPONENT DESCRIPTION	QUANTITY
C101	J707436P53	CAP CER NPO 68P 5% 50V	1
C102	J707438P26	CAP CER CL2 100N 10% 50V	1
C103	J707438P8	CAP CER CL2 3N3 10% 50V	1
C104	J707436P37	CAP CER NPO 33P 5% 50V	1
C105	J707436P37	CAP CER NPO 33P 5% 50V	1
C106	J707363P2	CAP CER NPO 18P 2% 50V	1
C107	J707436P37	CAP CER NPO 33P 5% 50V	1
C108	J707438P14	CAP CER CL2 10N 10% 50V	1
C109	J707363P7	CAP CER NPO 470P 2% 50V	1
C110	J707363P1	CAP CER NPO 15P 2% 50V	1
C111	J707436P9	CAP CER NPO 4P7,25P 50V	1
C112	J707363P5	CAP CER NPO 270P 2% 50V	1
C113	J707392P1	CAP VAR 5/30 PF	1
C114	J707363P3	CAP CER NPO 180P 2% 50V	1
C115	J707436P9	CAP CER NPO 4P7,25P 50V	1
C116	J707436P45	CAP CER NPO 47P 5% 50V	1
C117	J707363P6	CAP CER NPO 390P 2% 50V	1
C118	J707438P8	CAP CER CL2 3N3 10% 50V	1
C119	J707438P14	CAP CER CL2 10N 10% 50V	1
C120	J707438P26	CAP CER CL2 100N 10% 50V	1
C201	J707438P26	CAP CER CL2 100N 10% 50V	1
C202	J707436P13	CAP CER NPO 10P 5% 50V	1
C203	J707436P69	CAP CER NPO 220P 5% 50V	1
C204	J707363P8	CAP CER NPO 1N2 2% 50V	1
C205	J707363P8	CAP CER NPO 1N2 2% 50V	1
C206	J707436P69	CAP CER NPO 220P 5% 50V	1
C207	J707436P53	CAP CER NPO 68P 5% 50V	1
C208	J707438P26	CAP CER CL2 100N 10% 50V	1
C209	J707438P26	CAP CER CL2 100N 10% 50V	1
C210	J707438P14	CAP CER CL2 10N 10% 50V	1
C301	J707438P26	CAP CER CL2 100N 10% 50V	1
C302	J707438P14	CAP CER CL2 10N 10% 50V	1
C303	J707349P4	CAP CER 3,3NF 50V	1
C304	J707363P4	CAP CER NPO 220P 2% 50V	1
C305	J707392P1	CAP VAR 5/30 PF	1
C306	J707363P3	CAP CER NPO 180P 2% 50V	1
C307	J707436P37	CAP CER NPO 33P 5% 50V	1
C308	J707436P49	CAP CER NPO 56P 5% 50V	1
C309	J707349P4	CAP CER 3,3NF 50V	1
C310	J707438P16	CAP CER CL2 15N 10% 50V	1
D101	J707390P1	DIO SI SIG BAV 74	1
Q101	J707386P1	TSTR NPN SI BCW 32	1
Q102	J707386P1	TSTR NPN SI BCW 32	1
Q103	J707386P1	TSTR NPN SI BCW 32	1
Q104	J707387P1	TSTR PNP SI BCW 30	1
Q201	J707387P1	TSTR PNP SI BCW 30	1
Q202	J707386P1	TSTR NPN SI BCW 32	1

CIRCUIT POSITION	COMPONENT ITEM NUMBER	COMPONENT DESCRIPTION	QUANTITY
Q203	J707386P1	TSTR NPN SI BCW 32	1
Q204	J707386P1	TSTR NPN SI BCW 32	1
Q205	J707387P1	TSTR PNP SI BCW 30	1
Q301	J707387P1	TSTR PNP SI BCW 30	1
Q302	J707387P1	TSTR PNP SI BCW 30	1
Q303	J707387P1	TSTR PNP SI BCW 30	1
Q304	J707386P1	TSTR NPN SI BCW 32	1
Q305	J707386P1	TSTR NPN SI BCW 32	1
U101	J707244P2	IC DIG CMOS 4528	1
U102	J707434P3	IC DIG CMOS 4066	1
U103	J707229P1	IC LIN OP-AMP 14573	1
U104	J707434P3	IC DIG CMOS 4066	1
U105	J707434P3	IC DIG CMOS 4066	1
U201	J707229P1	IC LIN OP-AMP 14573	1
U301	J706465P1	IC LIN OP AMP TAA 865W	1
U302	J707434P3	IC DIG CMOS 4066	1
U303	J707434P3	IC DIG CMOS 4066	1
U304	J706465P1	IC LIN OP AMP TAA 865W	1

ITEM NUMBER DESCRIPTION

M905368G6 TQ4006

P A R T S L I S T

CIRCUIT POSITION	COMPONENT ITEM NUMBER	COMPONENT DESCRIPTION	QUANTITY
C101	J707436P53	CAP CER NPO 68P 5% 50V	1
C102	J707438P26	CAP CER CL2 100N 10% 50V	1
C103	J707438P8	CAP CER CL2 3N3 10% 50V	1
C104	J707436P37	CAP CER NPO 33P 5% 50V	1
C105	J707436P37	CAP CER NPO 33P 5% 50V	1
C106	J707363P2	CAP CER NPO 18P 2% 50V	1
C107	J707436P37	CAP CER NPO 33P 5% 50V	1
C108	J707438P14	CAP CER CL2 10N 10% 50V	1
C109	J707363P7	CAP CER NPO 470P 2% 50V	1
C110	J707363P1	CAP CER NPO 15P 2% 50V	1
C111	J707436P9	CAP CER NPO 4P7,25P 50V	1
C112	J707363P5	CAP CER NPO 270P 2% 50V	1
C113	J707392P1	CAP VAR 5/30 PF	1
C114	J707363P3	CAP CER NPO 180P 2% 50V	1
C115	J707436P9	CAP CER NPO 4P7,25P 50V	1
C116	J707436P45	CAP CER NPO 47P 5% 50V	1
C117	J707363P6	CAP CER NPO 390P 2% 50V	1
C118	J707438P8	CAP CER CL2 3N3 10% 50V	1
C119	J707438P14	CAP CER CL2 10N 10% 50V	1
C120	J707438P26	CAP CER CL2 100N 10% 50V	1
C201	J707438P26	CAP CER CL2 100N 10% 50V	1
C202	J707436P13	CAP CER NPO 10P 5% 50V	1
C204	J707363P7	CAP CER NPO 470P 2% 50V	1
C206	J707363P7	CAP CER NPO 470P 2% 50V	1
C207	J707436P53	CAP CER NPO 68P 5% 50V	1
C208	J707438P26	CAP CER CL2 100N 10% 50V	1
C209	J707438P26	CAP CER CL2 100N 10% 50V	1
C210	J707438P14	CAP CER CL2 10N 10% 50V	1
C301	J707438P26	CAP CER CL2 100N 10% 50V	1
C302	J707438P14	CAP CER CL2 10N 10% 50V	1
C303	J707349P4	CAP CER 3,3NF 50V	1
C304	J707363P4	CAP CER NPO 220P 2% 50V	1
C305	J707392P1	CAP VAR 5/30 PF	1
C306	J707363P3	CAP CER NPO 180P 2% 50V	1
C307	J707436P37	CAP CER NPO 33P 5% 50V	1
C308	J707436P49	CAP CER NPO 56P 5% 50V	1
C309	J707349P4	CAP CER 3,3NF 50V	1
C310	J707438P16	CAP CER CL2 15N 10% 50V	1
D101	J707390P1	DIO SI SIG BAV 74	1
Q101	J707386P1	TSTR NPN SI BCW 32	1
Q102	J707386P1	TSTR NPN SI BCW 32	1
Q103	J707386P1	TSTR NPN SI BCW 32	1
Q104	J707387P1	TSTR PNP SI BCW 30	1
Q201	J707387P1	TSTR PNP SI BCW 30	1
Q202	J707386P1	TSTR NPN SI BCW 32	1
Q203	J707386P1	TSTR NPN SI BCW 32	1
Q204	J707386P1	TSTR NPN SI BCW 32	1

CIRCUIT POSITION	COMPONENT ITEM NUMBER	COMPONENT DESCRIPTION	QUANTITY
Q205	J707387P1	TSTR PNP SI BCW 30	1
Q301	J707387P1	TSTR PNP SI BCW 30	1
Q302	J707387P1	TSTR PNP SI BCW 30	1
Q303	J707387P1	TSTR PNP SI BCW 30	1
Q304	J707386P1	TSTR NPN SI BCW 32	1
Q305	J707386P1	TSTR NPN SI BCW 32	1
U101	J707244P2	IC DIG CMOS 4528	1
U102	J707434P3	IC DIG CMOS 4066	1
U103	J707229P1	IC LIN OP-AMP 14573	1
U104	J707434P3	IC DIG CMOS 4066	1
U105	J707434P3	IC DIG CMOS 4066	1
U201	J707229P1	IC LIN OP-AMP 14573	1
U301	J706465P1	IC LIN OP AMP TAA 865W	1
U302	J707434P3	IC DIG CMOS 4066	1
U303	J707434P3	IC DIG CMOS 4066	1
U304	J706465P1	IC LIN OP AMP TAA 865W	1

ITEM NUMBER DESCRIPTION

M905368G7 TQ4007

P A R T S L I S T

CIRCUIT POSITION	COMPONENT ITEM NUMBER	COMPONENT DESCRIPTION	QUANTITY
C101	J707436P53	CAP CER NPO 68P 5% 50V	1
C102	J707438P26	CAP CER CL2 100N 10% 50V	1
C103	J707438P8	CAP CER CL2 3N3 10% 50V	1
C104	J707436P37	CAP CER NPO 33P 5% 50V	1
C105	J707436P37	CAP CER NPO 33P 5% 50V	1
C106	J707363P2	CAP CER NPO 18P 2% 50V	1
C107	J707436P37	CAP CER NPO 33P 5% 50V	1
C108	J707438P14	CAP CER CL2 10N 10% 50V	1
C109	J707363P7	CAP CER NPO 470P 2% 50V	1
C110	J707363P1	CAP CER NPO 15P 2% 50V	1
C111	J707436P9	CAP CER NPO 4P7,25P 50V	1
C112	J707363P5	CAP CER NPO 270P 2% 50V	1
C113	J707392P1	CAP VAR 5/30 PF	1
C114	J707363P3	CAP CER NPO 180P 2% 50V	1
C115	J707436P9	CAP CER NPO 4P7,25P 50V	1
C116	J707436P45	CAP CER NPO 47P 5% 50V	1
C117	J707363P6	CAP CER NPO 390P 2% 50V	1
C118	J707438P8	CAP CER CL2 3N3 10% 50V	1
C119	J707438P14	CAP CER CL2 10N 10% 50V	1
C120	J707438P22	CAP CER CL2 47N 10% 50V	1
C201	J707438P26	CAP CER CL2 100N 10% 50V	1
C202	J707436P13	CAP CER NPO 10P 5% 50V	1
C203	J707436P69	CAP CER NPO 220P 5% 50V	1
C204	J707363P8	CAP CER NPO 1N2 2% 50V	1
C205	J707363P8	CAP CER NPO 1N2 2% 50V	1
C207	J707436P53	CAP CER NPO 68P 5% 50V	1
C208	J707438P26	CAP CER CL2 100N 10% 50V	1
C209	J707438P22	CAP CER CL2 47N 10% 50V	1
C210	J707438P14	CAP CER CL2 10N 10% 50V	1
C301	J707438P26	CAP CER CL2 100N 10% 50V	1
C302	J707438P14	CAP CER CL2 10N 10% 50V	1
C303	J707349P4	CAP CER 3,3NF 50V	1
C304	J707363P4	CAP CER NPO 220P 2% 50V	1
C305	J707392P1	CAP VAR 5/30 PF	1
C306	J707363P3	CAP CER NPO 180P 2% 50V	1
C307	J707436P37	CAP CER NPO 33P 5% 50V	1
C308	J707436P49	CAP CER NPO 56P 5% 50V	1
C309	J707349P4	CAP CER 3,3NF 50V	1
C310	J707438P16	CAP CER CL2 15N 10% 50V	1
D101	J707390P1	DIO SI SIG BAV 74	1
Q101	J707386P1	TSTR NPN SI BCW 32	1
Q102	J707386P1	TSTR NPN SI BCW 32	1
Q103	J707386P1	TSTR NPN SI BCW 32	1
Q104	J707387P1	TSTR PNP SI BCW 30	1
Q201	J707387P1	TSTR PNP SI BCW 30	1
Q202	J707386P1	TSTR NPN SI BCW 32	1
Q203	J707386P1	TSTR NPN SI BCW 32	1

CIRCUIT POSITION	COMPONENT ITEM NUMBER	COMPONENT DESCRIPTION	QUANTITY
Q204	J707386P1	TSTR NPN SI BCW 32	1
Q205	J707387P1	TSTR PNP SI BCW 30	1
Q301	J707387P1	TSTR PNP SI BCW 30	1
Q302	J707387P1	TSTR PNP SI BCW 30	1
Q303	J707387P1	TSTR PNP SI BCW 30	1
Q304	J707386P1	TSTR NPN SI BCW 32	1
Q305	J707386P1	TSTR NPN SI BCW 32	1
U101	J707244P2	IC DIG CMOS 4528	1
U102	J707434P3	IC DIG CMOS 4066	1
U103	J707229P1	IC LIN OP-AMP 14573	1
U104	J707434P3	IC DIG CMOS 4066	1
U105	J707434P3	IC DIG CMOS 4066	1
U201	J707229P1	IC LIN OP-AMP 14573	1
U301	J706465P1	IC LIN OP AMP TAA 865W	1
U302	J707434P3	IC DIG CMOS 4066	1
U303	J707434P3	IC DIG CMOS 4066	1
U304	J706465P1	IC LIN OP AMP TAA 865W	1

ITEM NUMBER	DESCRIPTION
M905368G8	TQ4008

P A R T S L I S T :

CIRCUIT POSITION	COMPONENT ITEM NUMBER	COMPONENT DESCRIPTION	QUANTITY TOTAL
C101	J707436P53	CAP CER 68PF 50V	1
C102	J707438P26	CAP CER 100NF 50V	1
C103	J707438P8	CAP CER 3,3NF 50V	1
C104	J707436P37	CAP CER 33PF 50V	1
C105	J707436P37	CAP CER 33PF 50V	1
C106	J707363P2	CAP CER 18PF 50V	1
C107	J707436P37	CAP CER 33PF 50V	1
C108	J707438P14	CAP CER 10NF 50V	1
C109	J707363P7	CAP CER 470PF 50V	1
C110	J707363P1	CAP CER 15PF 50V	1
C111	J707436P9	CAP CER 4,7PF 50V	1
C112	J707363P5	CAP CER 270PF 50V	1
C113	J707392P1	CAP VAR 5/30 PF	1
C114	J707363P3	CAP CER 180PF 50V	1
C115	J707436P9	CAP CER 4,7PF 50V	1
C116	J707436P45	CAP CER 47PF 50V	1
C117	J707363P6	CAP CER 390PF 50V	1
C118	J707438P8	CAP CER 3,3NF 50V	1
C119	J707438P14	CAP CER 10NF 50V	1
C120	J707438P26	CAP CER 100NF 50V	1
C201	J707438P26	CAP CER 100NF 50V	1
C202	J707436P13	CAP CER 10PF 50V	1
C203	J707436P67	CAP CER 180PF 50V	1
C204	J707363P7	CAP CER 470PF 50V	1
C205	J707436P69	CAP CER 220PF 50V	1
C206	J707363P7	CAP CER 470PF 50V	1
C207	J707436P53	CAP CER 68PF 50V	1
C208	J707438P26	CAP CER 100NF 50V	1
C209	J707438P26	CAP CER 100NF 50V	1
C210	J707438P14	CAP CER 10NF 50V	1
D101	J707390P1	DIO SI BAV 70	1
Q101	J707386P1	TSTR BCW 32	1
Q102	J707386P1	TSTR BCW 32	1
Q103	J707386P1	TSTR BCW 32	1
Q104	J707387P1	TSTR BCW 30	1
Q201	J707387P1	TSTR BCW 30	1
Q202	J707386P1	TSTR BCW 32	1
Q203	J707386P1	TSTR BCW 32	1
Q204	J707386P1	TSTR BCW 32	1
Q205	J707387P1	TSTR BCW 30	1
U101	J707244P2	INT CKT 4528/SO16	1
U102	J707434P3	INT CKT 4066/SO14	1
U103	J707229P1	INT CKT MC14573	1
U104	J707434P3	INT CKT 4066/SO14	1
U105	J707434P3	INT CKT 4066/SO14	1
U201	J707229P1	INT CKT MC14573	1

Storno

TQ4009

PROGRAMMABLE TONE MODULE

The tone module TQ4009 is a combined tone transmitter/tone receiver unit which is universal programmable and used in connection with the control logic board CL4003 in the CQP4000 Automatic version. The TQ4009 functions only in connection with the CL4003 control logic or a similar board which is capable of programming the tone module, controlling the transmitters and handling the detected outputs.

The TQ module is built around a DTD chip (Digital Tone Decoder) which is to be considered as a programmable digital filter. The periferical circuitry consists of a limiter which shapes input signals and an integrator at the detect output which ensures proper detection.

A summation network is used to generate the output signal from two square waves from the DTD, known as Walsh Functions.
When the TQ is used as a tone encoder the summation network is enabled from the control logic via connector J905, pins 10 and 11. The final signal is filtered before being applied to the TX audio processor on the CL-board through pin 16 on J905.

TQ4009 has two DTD substrates to be able to generate dual tone signals. The circuit is not suitable for decoding dual tones.

All connections to the TQ module are through connectors J904 and J905.

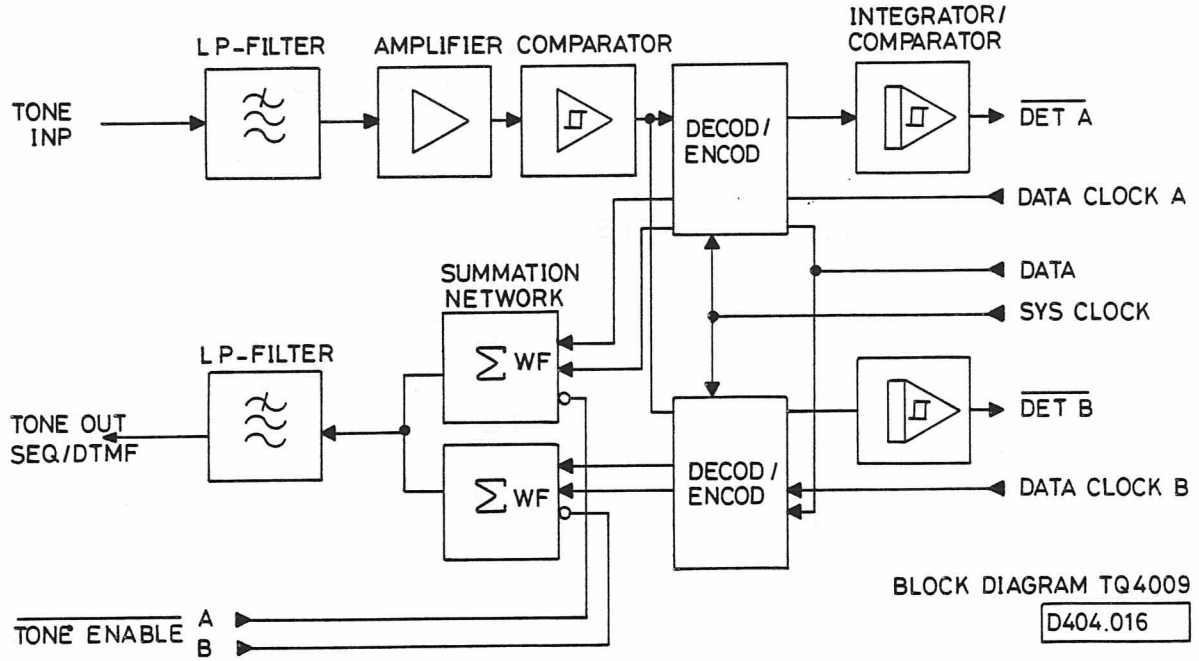

BLOCK DIAGRAM TQ4009
D404.016

TQ TONE DATA LOADING

A system clock signal from the control logic is fed to the circuit through J904, pin 7. The system clock frequency is derived from 6,4 MHz and 200 kHz is chosen.

The DTD is programmed by serially loading 15 bits of information through DTD Data and clocked on the positive edges of DTD STB (CLOCK A and CLOCK B).
The first 5 bits determine the Q-value of the tone circuit and the last 10 bits program the frequency.
The threshold is programmed with the Thresh Sel A, -B inputs to be -8,5 dB.
The data clock inputs (CLOCK A-B) must return low as the chip is reset when high.

TONE RECEPTION

Tones are received through J904, pin 5. From this pin the tone passes a 2-pole active low-pass filter built around OP-amp U101A. It is then amplified by a factor 30 in U101B and finally limited through comparator U102A.

The output from the limiter is sent to the detect inputs of the DTD's, U103 and U104. If the DTD, which is to be considered as a programmable digital filter, accepts the signal to be equivalent to the programmed tone, the detect output goes HIGH.

To ensure a reliable detect acknowledge, an integrator/comparator, U102B-U106B, is processing the DTD detect output. The delayed detect output from this integrator/comparator is active LOW.

TONE ENCODING

The DTD decode and encode simultaneously. This means that the programmed resonant frequency is present on the tone outputs.
The encode signal is built-up by two square-wave signals, the so-called Walsh Function bits. This tone is proportionally summed by a pair of TRI-state buffers, U105, and the corresponding resistor network. The result of the summed Walsh Function bits is fed through a second order active low pass filter with 0 dB gain.
If DTMF tones are wanted an extra load resistor, R134, is switched on to keep the voltage swing at the rated value.
The encode tone signal output is fixed at the level fit for the CL4000 board.

TECHNICAL SPECIFICATIONS

Power supply
5.5 V reg.

Current consumption

Decoding:	2.6 mA typical	3.5 mA max.
Encoding:	3.0 mA typical	4.0 mA max.

ANALOG INTERFACE

Tone input J905, 5

Input impedance:	>30 kOhm
Input response:	600-3100 Hz, 110 mV ±6 dB

Tone output J905, 16

Output impedance:	< 100 Ohm
Output level:	270 mV RMS +1 dB/-2 dB/1124 Hz

DIGITAL INTERFACE

Input
Tone enable J905, 10-11
DTD data J904, 2
DTD STB J904, 4-3
DTD SYS Clk. J904, 7

Output
Tone detect J905, 12-13: Vol <1 V/10/ <1 mA
Uoh >4 V

INPUT (DECODING)

Frequency response
flat 600-3100 Hz

Activating level
110 mV ±6 dB

Distortion
20%

Selectivity
Q-value = 32: TQ4009 not sensitive to adjacant tone or other tones of same standard series.

OUTPUT (ENCODING)

Output voltage
270 mV +1 dB/-2 dB
two poles low-pass fc=3.3 kHz

Distortion (single tone)
typical 4% max 10%

Dimensions
Width x Length x Heigth:
23.1 x 56 x 5 mm

Weight
5 g

Storno

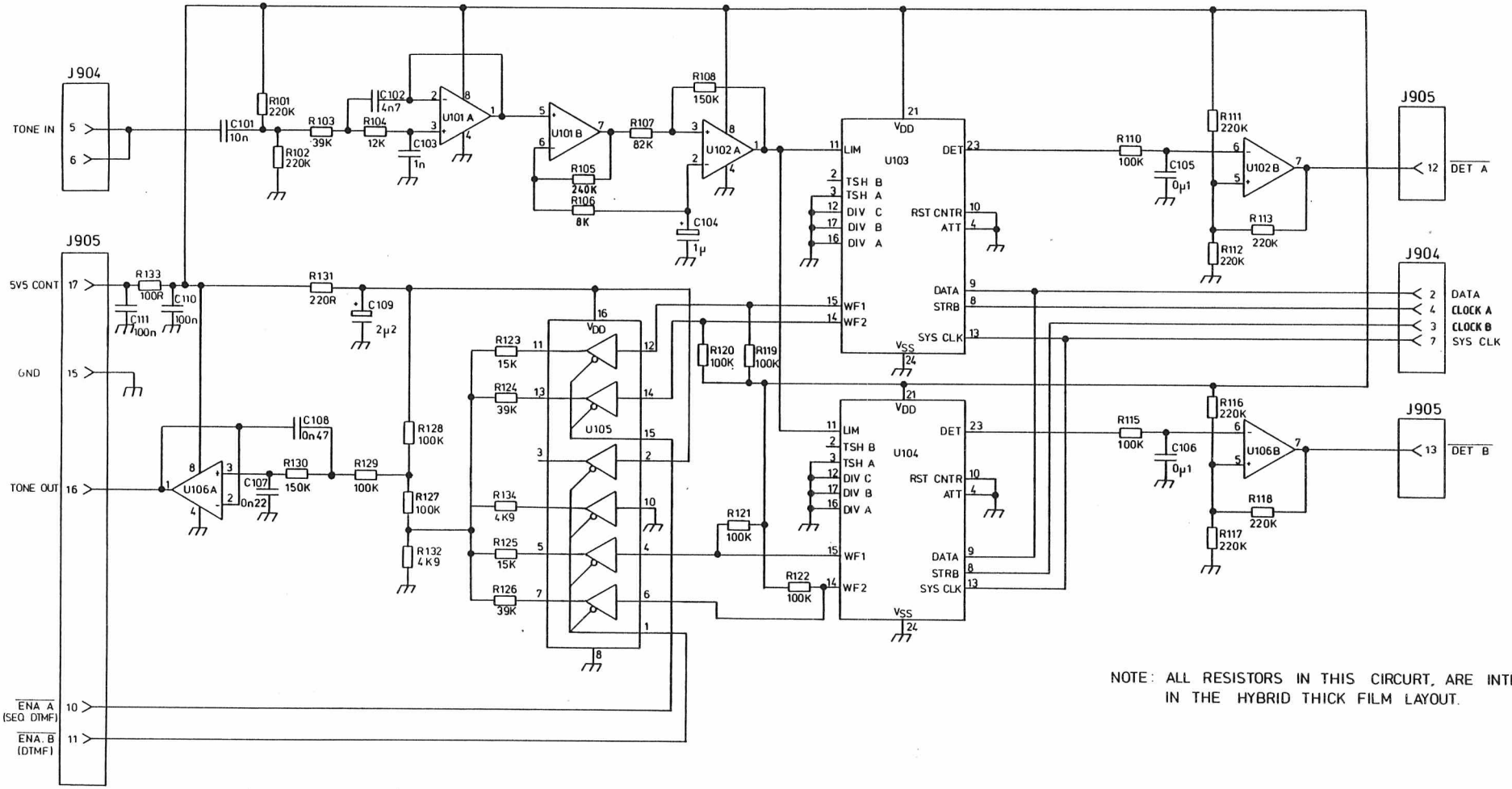

NOTE: ALL RESISTORS IN THIS CIRCURT, ARE INTEGRATED IN THE HYBRID THICK FILM LAYOUT.

TONE MODULE TQ4009

CODE NO. M905912G1 | D404.007/2

ITEM NUMBER	DESCRIPTION
M905912G1	INT CKT, TQ 4009 ASM

P A R T S L I S T :

CIRCUIT POSITION	COMPONENT ITEM NUMBER	COMPONENT DESCRIPTION	QUANTITY
C101	J707438P14	CAP CER CL2 10N 10% 50V	1
C102	J707438P10	CAP CER CL2 4N7 10% 50V	1
C103	J707438P5	CAP CER CL2 1N 10% 50V	1
C104	A700045P6	CAP TA SOL 1U0 20% 10V	1
C105	J707438P26	CAP CER CL2 100N 10% 50V	1
C106	J707438P26	CAP CER CL2 100N 10% 50V	1
C107	J707363P4	CAP CER NPO 220P 2% 50V	1
C108	J707363P7	CAP CER NPO 470P 2% 50V	1
C109	A700045P7	CAP TA SOL 2U2 20% 10V	1
C110	J707438P26	CAP CER CL2 100N 10% 50V	1
C111	J707438P26	CAP CER CL2 100N 10% 50V	1
U001	M905911G1	INT CKT, THK-FLM.	1
U101	J707859P1	IC LIN OP-AMP 4558	1
U102	J707859P1	IC LIN OP-AMP 4558	1
U103	B801180G1	INT CKT CUST DTD	1
U104	B801180G1	INT CKT CUST DTD	1
U105	J708791P1	IC DIG BUFR 74HC367	1
U106	J707859P1	IC LIN OP-AMP 4558	1
0004	J708995P9	LABEL REV LTR	1

CHAPTER 9
MECHANICAL LAYOUTS MECHANICAL PARTSLISTS

CQP4000 : -
LIST of
MECHANICAL COMPONENTS

ITEM NO.	PART NUMBER	DESCRIPTION	Included in MODULE:
1	19J707133P3	PTT-microswitch	CL4001
2	19J707230P1	LCD,- Liquid Crystal Display	CL4001
3	19L855332P1	Display cover	CL4001
4	19J707458P1	Conductorstrip, conduct.silc.rubb.	CL4001
5	19L855333P1	Lightguide, acryllic	CL4001
6	19L855331P1	Display housing	CL4001
7	19K805349G1	Cover assy.,w.Keyboard, w.out LS and MC	CP4001
8	19L855396P1	LS-/MC cabling, flex-board	CP4001
9	19A701301P2	MC, - microphone	CP4001
10	19J707407P1	LS, - loudspeaker	CP4001
11	19J707235P1	Gasket f. MC, silc.rubb.	CP4001
12	19L855350P1	Lock-ring f. LS, delrin	CP4001
13	19J707585P1	Netting f. LS	CP4001
14a	19K805346P1	Shielding plate f. VHF freq. sttn.'s	
14b	19K805346P2	Shielding plate f. UHF freq. sttn.'s	
15	19K805306P1	Cover gasket f. PTT-switch	CH4001
16	19K805297P1	Bushing-connector f. Antenna	CH4001
17	19J707463G1	Hardware Kit:	(CA4001)
17a	19A700031P220	Screw, M2 x 20 mm, flt.h.	19J707463G1
17b	19J707518P1	Spec. screw, M2 mm	19J707463G1
17c	19K805348G1	PTT-button, assembly	19J707463G1
17d	19J707586P1	Gasket, adjustable	19J707463G1
17e	19K805318P1	Eyelet, f.carrying strap	19J707463G1
17f	19K805318P2	Eyelet 2, f. carrying strap	19J707463G1
18	19L855403P1	Dust cover	

CQP4110 MODULE LIST
146 - 174 MHz

MODULE TYPE	PART NUMBER	DESCRIPTION	
CA4001	19M905458P1 19J707463G1	Cabinet Cabinet - Hardware Kit	
CH4001	19L855356G1	Chassis	
CL4001	19K805331G1	Control Logic	
CP4001	19L855355G1	Control Panel	
RF4112	19J707428G1	RF-Board, 25 kHz	
RF4113	19J707428G2	RF-Board, 20 kHz	
RF4114	19J707428G3	RF-Board, 12,5 kHz	
TQ4001	19M905368G1	Tone module: ZVEI/CCIR/ENC/DEC	
TQ4002	19M905368G2	Tone module: ZVEI/CCIR/ENC/DEC/ GROUP 885-/970 Hz	
TQ4003	19M905368G3	Tone module: ZVEI/CCIR/ENC/DEC/ GROUP 2400-/2800 Hz	
TQ4004	19M905368G4	Tone module: EEA/ENC/DEC/ GROUP 1055 Hz	
TQ4005	19M905368G5	Tone module: ZVEI/CCIR/ENC/DEC/ GROUP 885-/970 Hz, + CG	
TQ4006	19M905368G6	Tone module: ZVEI/CCIR/ENC/DEC/ GROUP 2400-/2800 Hz, + CG	
TQ4007	19M905368G7	Tone module: EEA/ENC/DEC/ GROUP 1055 Hz, + CG	
	19J707417P1	PROM, 256 x 4 Bit, Types: S82S129 F / MMI5301-1J / HM1 7611-2	
	19J707019P1 19J707019P3	6,4 MHz crystal, 10 ppm 6,4 MHz crystal, 5 ppm	
	19J707309P1	20.945 MHz crystal	
	19J707019P2 19J707019P4	6,5 MHz crystal, 10 ppm 6,5 MHz crystal, 5 ppm	For: selfquie-ting-Freq.'s
	19J707309P2	20.855 MHz	

Storno

Storno

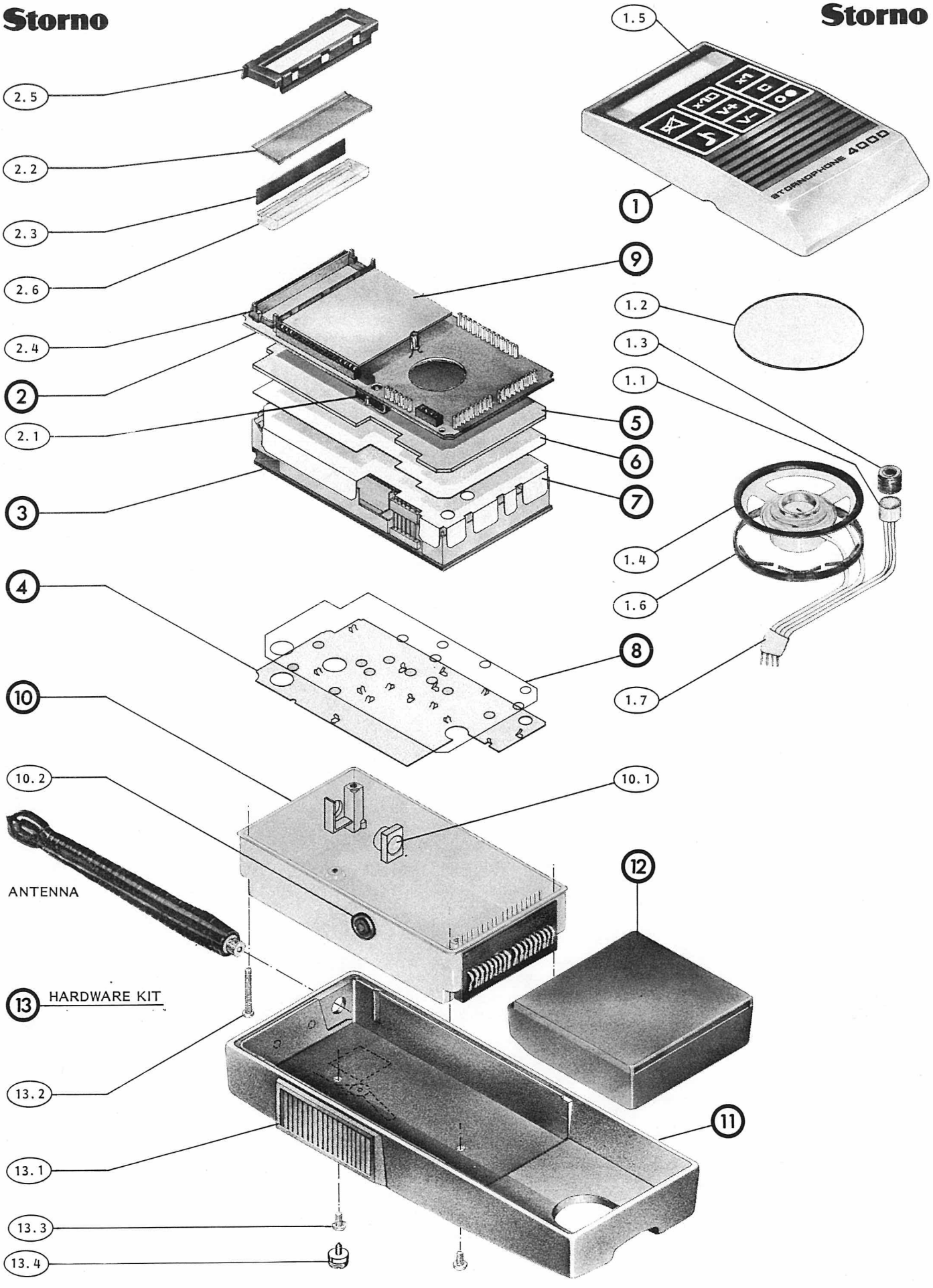

MECHANICAL LAYOUT & PART NUMBERS CQP4000
SCHEMA MECANIQUE & NUMEROS DE PIECES
MECHANISCHE ZEICHNUNG & TEILENUMMERN

M405.110/4

POS	CODE No.	DESCRIPTION	QTY.
1	L855355G1	CP4001 2 Channel Assembled	1
	L855355G2	CP4001 10 Channel Assembled	1
1.1	A701301P2	Microphone	1
1.2	J706863P1	Filter Nylon	1
1.3	J707235P1	Gasket, Microphone	1
1.4	J707407P1	Loudspeaker permanent magnet 8R 0.4 W	1
1.5	K805349G1	Cover Assembled	1
1.6	L855350P1	Lock Ring	1
1.7	L855396P1	Cpnt. Board Flex.	1
2	K805331G1	CL4001-2CH. For 2 Meter & 4 Meter Asm.	1
	K805331G2	CL4001-2CH. For UHF Asm.	1
	K805449G1	CL4002-10CH. For 2 Meter & 4 Meter Asm.	1
	K805449G2	CL4002-10CH. For UHF	1
2.1	J707133P3	Micro Switch	1
2.2	J707230P1	display	1
2.3	J707458P1	Conn. Cond. Rubber Zeb. Strip	1
2.4	L855331P1	Housing display	1
2.5	L855332P1	Cover display	1
2.6	L855333P1	Plate Acrylic	1
3	J707428G1	RF 4112	1
	J707428G2	RF 4113	1
	J707428G3	RF 4114	1
	J707942G1	RF 4332	1
	J707942G2	RF 4333	1
	J707942G3	RF 4334	1
	J707801G1	RF 4662 H	1
	J707801G2	RF 4663 H	1
	J707801G3	RF 4664 H	1
	J707801G4	RF 4662 L	1
	J707801G5	RF 4663 L	1
	J707801G6	RF 4664 L	1
4	J707989G1	Plate Grounding Asm. UHF	1
	J707959G1	Plate Grounding Asm. 80 MHz.	1
	J708035G1	Plate Grounding Asm. 160 MHz.	1
5	J708184P1	Insulation Foam For UHF & 160 MHz.	1
6	J708218P1	Insulation Foil	1
7	M905648P1	Shield For UHF	1
	M905943P1	Shield For 160 MHz.	1
8	L855532P1	Insulation Plate For 160 MHz.	1
	L855532P2	Insulation Plate For UHF	1
	L855532P3	Insulation Plate For 80 MHz.	1

continues on the next page

POS	CODE No.	DESCRIPTION	QTY.
9	M905368G1-G8	TQ4001-TQ4008	1
	M905581G1-G3	CG4001-CG4003	1
10	L855356G1	Chassis CH4001	1
10.1	K805297P1	Antenna Connector	1
10.2	k805306P1	Gasket PTT.	1
11	M905458G1	Cabinet CA4001	1
12	L855364G1	Battery Unit BU4001	1
	L855364G2	Battery Unit BU4002	1
13	J707463G1	Hardware Kit	1
13.1	~~K805348G1~~ L855621P1	Knob PTT. Assembled	1
13.2	A700031P220	Screw Pan Head M2x20	4
13.3	J707518P1	Screw Pan Head M2.5x4	2
		Hardware Kit also contains the following items	
	J707586P1	Gasket	1
	K805318P1	Eyelet 1	1
	K805318P2	Eyelet 2	1
		End of Part List	

POS	CODE No.	DESCRIPTION	QTY.
1	L855355G1	CP4001 2 Channel Assembled	1
	L855355G2	CP4001 10 Channel Assembled	1
1.1	A701301P2	Microphone	1
1.2	J706863P1	Filter Nylon	1
1.3	J707235P1	Gasket, Microphone	1
1.4	J707407P1	Loudspeaker permanent Magnet 8R 0.4 W	1
1.5	K805349G1	Cover Assembly.(for 2 Channel)	1
	K805349G2	Cover Assembly.(for 10 Channel)	1
1.6	L855350P1	Lock Ring	1
1.7	L855396P1	Cpnt. Board Flex.	1
2	K805331G1	CL4001-2CH. For 2 Meter & 4 Meter Asm.	1
	K805331G2	CL4001-2CH. For UHF Asm.	1
	K805449G1	CL4002-10CH. For 2 Meter & 4 Meter Asm.	1
	K805449G2	CL4002-10CH. For UHF	1
2.1	J707133P3	Micro Switch	1
2.2	J707230P1	display	1
2.3	J707458P1	Conn. Cond. Rubber Zeb. StriP	1
2.4	L855331P1	Housing display	1
2.5	L855332P1	Cover display	1
2.6	L855333P1	Plate Acrylic	1
3	J707428G1	RF 4112	1
	J707428G2	RF 4113	1
	J707428G3	RF 4114	1
	J707942G1	RF 4332	1
	J707942G2	RF 4333	1
	J707942G3	RF 4334	1
	J707801G1	RF 4662 H	1
	J707801G2	RF 4663 H	1
	J707801G3	RF 4664 H	1
	J707801G4	RF 4662 L	1
	J707801G5	RF 4663 L	1
	J707801G6	RF 4664 L	1
4	J707989G1	Plate Grounding Asm. UHF	1
	J707959G1	Plate Grounding Asm. 80 MHz.	1
	J708035G1	Plate Grounding Asm. 160 MHz.	1
5	J708184P1	Insulation Foam For UHF & 160 MHz.	1
6	J708218P1	Insulation Foil	1
7	M905648P1	Shield For UHF	1
	M905943P1	Shield For 160 MHz.	1
8	L855532P1	Insulation Plate For 160 MHz.	1
	L855532P2	Insulation Plate For UHF	1

Continues on the next page

POS	CODE No.	DESCRIPTION	QTY.
	L855532P3	Insulation Plate For 80 MHz.	1
9	M905368G1-G8	TQ4001-TQ4008 Assembled	1
	M905581G1-G3	CG4001-CG4003 Assembled	1
10	L855356G2	Chassis CH4002 Assembled	1
	L855356G3	Chassis CH4003 Asm. (only with remote control)	1
10.1	K805297P1	Antenna connector	1
10.2	K805306P1	Gasket PTT.	1
11	M905458P1	Cabinet CA4001	1
	K805729G1	Cabinet CA4003 Asm. (only with remote control)	1
12	L855364G1	Battery Unit BU4001 450 mAh.	1
	L855364G2	Battery Unit BU4002 750 mAh.	1
13	J707463G1	Hardware kit	1
	J707463G2	Hardware kit (only with remote control)	1
13.1	K805348G1	Knob PTT. Assembled	1
	L855621P1	Knob PTT. (only with remote control)	1
13.2	A700031P220	Screw Pan Head M2x20	4
13.3	J707518P1	Screw Pan Head M2.5x4 (only 1 pcs.for remote)	2
13.4	J708869P1	Screw (only with remote control)	1
		Hardware Kit also contains the following items	
	J707586P1	Gasket	1
	K805318P1	Eyelet 1	1
	K805318P2	Eyelet 2	1
		End of Part List	

POS	CODE No.	DESCRIPTION	QTY.
1	L855355G1	CP4001 2 Channel Assembled	1
	L855355G2	CP4001 10 Channel Assembled	1
	1855355G3	CP4001 Maritim (Germany)	1
1.1	A701301P2	Microphone	1
1.2	J706863P1	Filter Nylon	1
1.3	J707235P1	Gasket, Microphone	1
1.4	J707407P1	Loudspeaker permanent Magnet 8R 0.4 W	1
1.5	K805349G1	Cover Assembly.(for 2 Channel)	1
	K805349G2	Cover Assembly.(for 10 Channel)	1
	K805349G3	Cover Assembly.(for Maritim Germany)	1
1.6	L855350P1	Lock Ring	1
1.7	L855396P1	Cpnt. Board Flex.	1
2	K805331G1	CL4001-2CH. For 2 Meter & 4 Meter Asm.	1
	K805331G2	CL4001-2CH. For UHF Asm.	1
	K805449G1	CL4002-10CH. For 2 Meter & 4 Meter Asm.	1
	K805449G2	CL4002-10CH. For UHF	1
2.1	J707133P3	Micro Switch	1
2.2	J707230P1	display	1
2.3	J707458P1	Conn. Cond. Rubber Zeb. StriP	1
2.4	L855331P1	Housing display	1
2.5	L855332P1	Cover display	1
2.6	L855333P1	Plate Acrylic	1
3	J707428G1	RF 4112	1
	J707428G2	RF 4113	1
	J707428G3	RF 4114	1
	J707942G1	RF 4332	1
	J707942G2	RF 4333	1
	J707942G3	RF 4334	1
	J707801G1	RF 4662 H	1
	J707801G2	RF 4663 H	1
	J707801G3	RF 4664 H	1
	J707801G4	RF 4662 L	1
	J707801G5	RF 4663 L	1
	J707801G6	RF 4664 L	1
4	L855419P2	Plate Grounding Asm. UHF	1
	J707959G1	Plate Grounding Asm. 80 MHz.	1
	J708035G1	Plate Grounding Asm. 160 MHz.	1
5	J708184P1	Insulation Foam For UHF & 160 MHz.	1
6	J708218P1	Insulation Foil	1
7	M905648P1	Shield For UHF	1
	M905943P1	Shield For 160 MHz.	1

Continues on the next page

POS	CODE No.	DESCRIPTION	QTY.
8	L855532P1	Insulation Plate For 160 MHz.	1
	L855532P2	Insulation Plate For UHF	1
	L855532P3	Insulation Plate For 80 MHz.	1
9	M905368G1-G8	TQ4001-TQ4008 Assembled	1
	M905581G1-G3	CG4001-CG4003 Assembled	1
10	L855356G2	Chassis CH4002 Assembled	1
	L855356G3	Chassis CH4003 Asm. (only with remote control)	1
10.1	K805297P1	Antenna connector	1
10.2	K805306P1	Gasket PTT.	1
11	M905458P1	Cabinet CA4001	1
	L855781G1	Cabinet CA4002 (With belt clip)	1
	K805729G1	Cabinet CA4003 Asm. (only with remote control)	1
	L855781G2	Cabinet CA4004 With belt clip (Remote control)	1
12	L855364G1	Battery Unit BU4001 450 mAh.	1
	L855364G2	Battery Unit BU4002 750 mAh.	1
13	J707463G1	Hardware kit	1
	J707463G2	Hardware kit (only with remote control)	1
13.1	K805348G1	Knob PTT. Assembled	1
	L855621P1	Knob PTT. (only with remote control)	1
13.2	A700031P220	Screw Pan Head M2x20	4
13.3	J707518P1	Screw Pan Head M2.5x4 (only 1 pcs.for remote)	2
13.4	J708869P1	Screw (only with remote control)	1
		Hardware Kit also contains the following items	
	J707586P1	Gasket	1
	K805318P1	Eyelet 1	1
	K805318P2	Eyelet 2	1
		End of Part List	

Storno

Storno

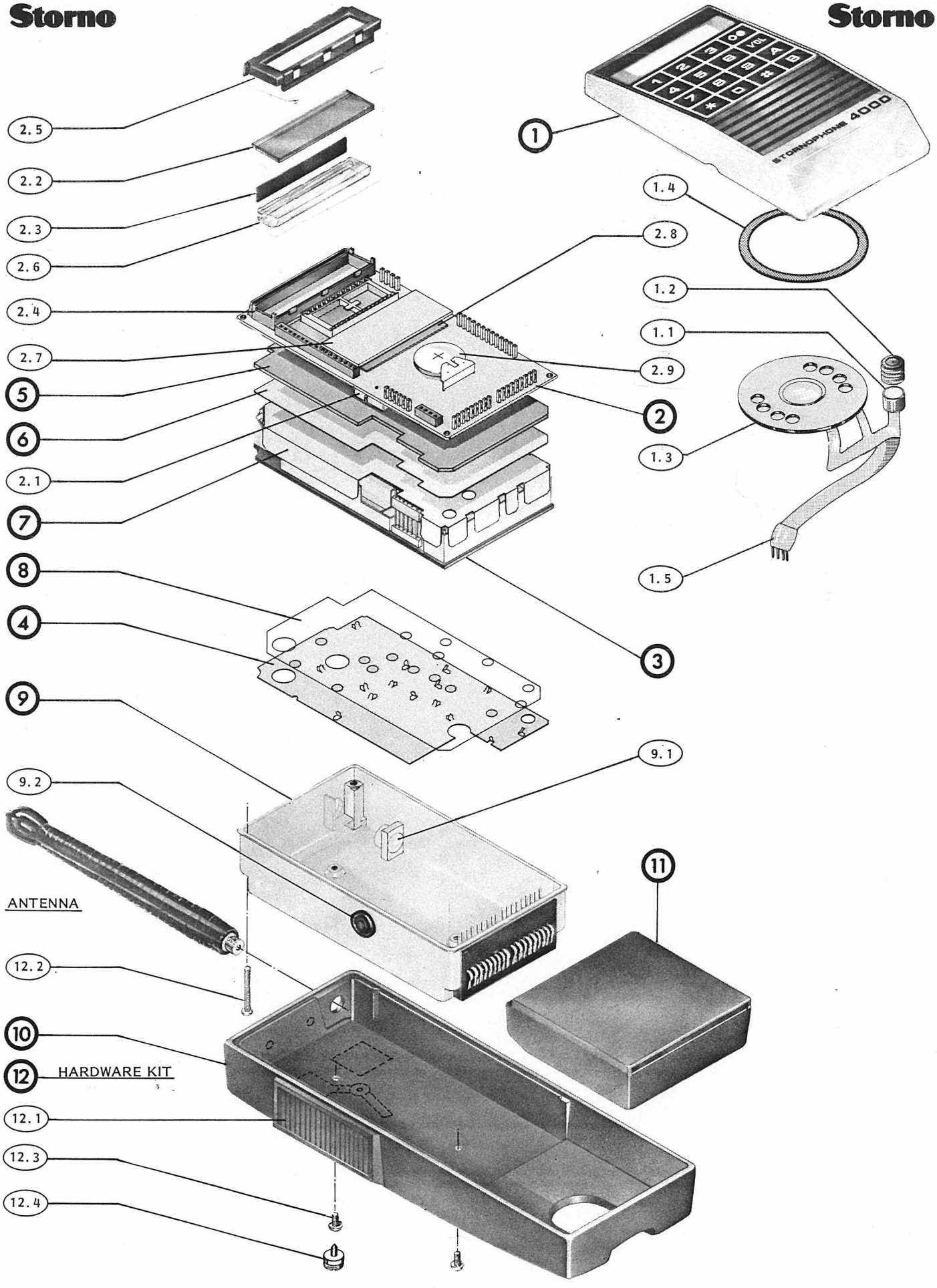

MECHANICAL LAYOUT AND PART NUMBERS
FOR CQP4000 AUTOMATIC

M405.194/2

POS.	CODE No.	DESCRIPTION	QT.
1	M906013G1	CP4002 Assembled For SAS	1
	M906013G2	CP4002 For Air France & British Air	1
	M906013G4	CP4002 For General purpose	1
	M906013G5	CP4002 For British Rail	1
1.1	A701301P2	Microphone	1
1.2	J707235P1	Gasket, Microphone	1
1.3	J708879P1	Loudspeaker perm. magnet 8R 0.15 W	1
1.4	J709325P1	Gasket For Loudspeaker	1
1.5	L855800P1	Cpnt. Board Flex.	1
2	K805602G1	CL4003 Assembled	1
	K805779G1	CL4004 Binary	1
	K805779G2	CL4004 Binary For British Rail	1
2.1	J707133P3	Micro Switch	1
2.2	J707230P1	Display	1
2.3	J707458P1	Conn. Cond. Rubber Zeb. Strip	1
2.4	L855331P1	Housing display	1
2.5	L855332P1	Cover display	1
2.6	L855333P1	Plate Acrylic	1
2.7	M905912G1	TQ4009 Assembled	1
	M906152G1	MD4001 Assembled	1
2.8	M905910G1	PU4001 Assembled	1
	M905910G2	PU4001 For British Rail	1
2.9	J708463P2	Battery Prim 170 MAH R2032	1
3	J707428G1	RF4112	1
	J707428G2	RF4113	1
	J707428G3	RF4114	1
	J707942G1	RF4332	1
	J707942G2	RF4333	1
	J707942G3	RF4334	1
	J707801G1	RF4662 H	1
	J707801G2	RF4663 H	1
	J707801G3	RF4664 H	1
	J707801G4	RF4662 L	1
	J707801G5	RF4663 L	1
	J707801G6	RF4664 L	1
	J709500G1	RF4774 L	1
	J709500G2	RF4774 M	1
	J709500G3	RF4774 H	1

Storno

4	L855419P2	Plate Grounding Asm. UHF	1
	J707959G1	Plate Grounding Asm. 80 MHz.	1
	J708035G1	Plate Grounding Asm. 160 MHz.	1
5	J708184P1	Insulation Foam For UHF & 160 MHz.	1
6	J708218P1	Insulation Foil	1
7	M905648P1	Shield For UHF	1
	M905943P1	Shield For 160 MHz.	1
8	L855532P1	Insulation Plate For 160 MHz.	1
	L855532P2	Insulation Plate For UHF	1
	L855532P3	Insulation Plate For 80 MHz.	1
9	L855356G2	Chassis CH4002 Assembled	1
	L855356G3	Chassis CH4003 Asm. (only rem. cont.)	1
9.1	K805297P1	Antenna Connector	1
9.2	K805306P1	Gasket PTT.	1
10	M905458P1	Cabinet CA4001	1
	L855781G1	Cabinet CA4002 (for belt clip)	1
	K805729G1	Cabinet CA4003 Asm. (only rem. cont.)	1
	L855781G2	Cabinet CA4004 f.belt clip (rem. cont.	1
11	L855364G1	Battery Unit BU4001 450 mAh.	1
	L855364G2	Battery Unit BU4002 750 mAh.	1
12	J707463G1	Hardware Kit	1
	J707463G2	Hardware Kit (only for rem. cont.)	1
12.1	K805348G1	Knob PTT. Assembled	1
	L855621P1	Knob PTT. (only for rem. cont.)	1
12.2	A700031P220	Screw Pan Hd M2x20	4
12.3	J707518P1	Screw Pan Hd M2.5x4 (only 1 f. remote)	2
12.4	J708869P1	Screw (only for rem. cont.)	1
		Hardware Kit also contains:	
	J707586P1	Gasket	1
	K805318P1	Eyelet 1	1
	K805318P2	Eyelet 2	1
		End of Part List	

MECHANICAL PARTS LIST

CQP4000 AUTOMATIC/BINARY

15th.Nov.1985 Revision 02

MPL405.194

CHAPTER 10
REMOTE CONTROL

- CB4001/2/3
- ACCESSORIES

Storno

CQP4000 UNIVERSAL

REMOTE CONTROL

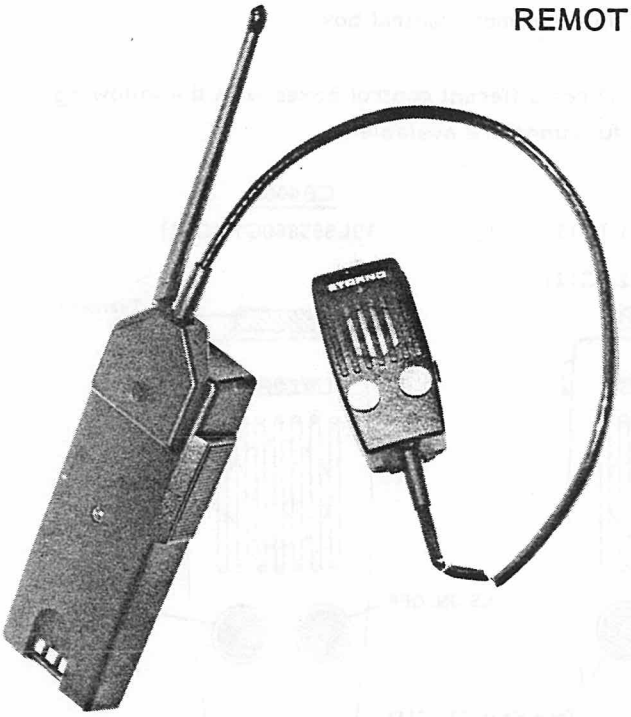

The remote control is connected to the CQP4000 by an 11 cored multi-connector terminating cable.

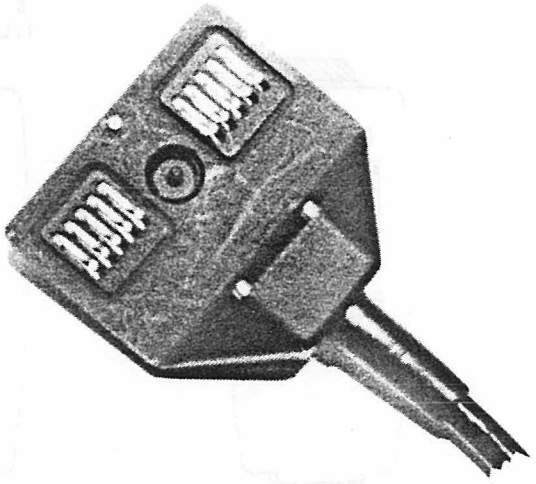

The installation demands a special cabinet, CA4003.

This cabinet is provided with two cut-aways, each giving access to five contact surfaces from a female multiconnector. These 10 contacts are connected to the bottom terminals on a chassis, CH4003, by means of a flexible wiring board being part of the chassis.

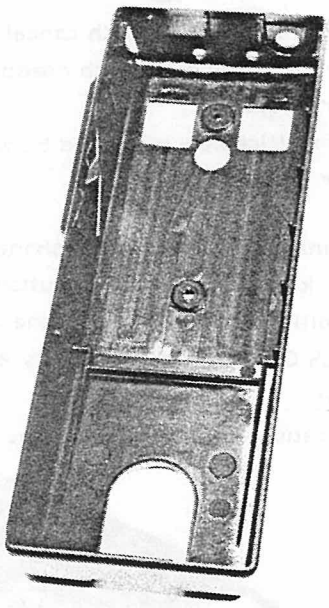

CH4003

L855-356 G3

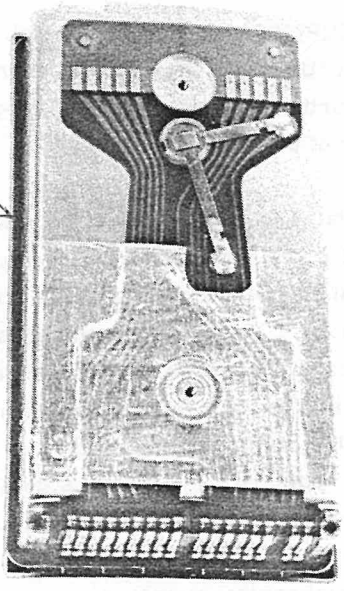

A threaded hole, placed between the two cut-aways, secures the multiconnector terminating the multicable from the remote control box CB400x.

If no multiconnector is used a protective cover protects the contacts.

As a special option an earphone socket can be mounted on the control box.

The remote control, when connected to the CQP4000, transfers the loudspeaker and microphone facilities to the control box whereby the loudspeaker/microphone in the CQP4000 is switched off.

The control facilities comprising transmitter key, tone key, and loudspeaker ON/OFF, however, operate fully in parallel on the CQP4000U and on the remote control box.

Three different control boxes with the following functions are avaiable:

CB4001
19L855804G1 (G11)

CB4002
19L855859G1 (G11)
&
19L855859G2 (G12)

CB4003
19L855860G1 (G11)

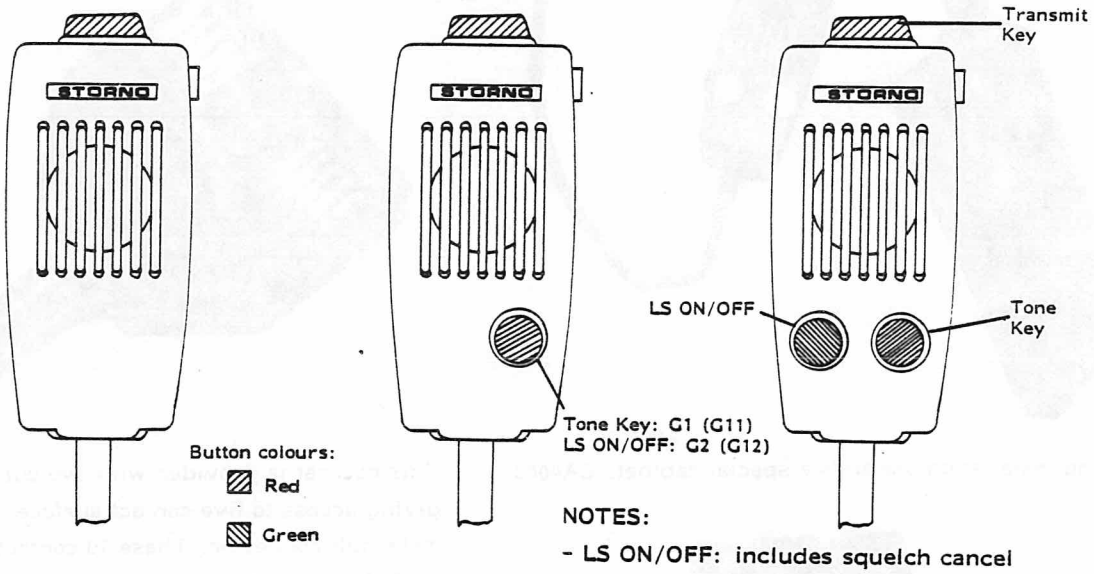

NOTES:

- **LS ON/OFF: includes squelch cancel**
- **G-No's in ( ) cover types with headphone connector added**
- **Length of multicable - measured between connector and CB is 800 mm**

To order a CQP4000 with remote control, CQP4000U, please select "U" under digit no. 7. See nomenclature for further information concerning type specification of the radio.

CB4001 contains loudspeaker/microphone, transmitter key, and, optionally, earphone socket.
Application: CQP4000 without tone equipment or CQP4000U automatic version.

CB4002 contains loudspeaker/microphone, transmitter key, one extra push button controlling either tone keying or LS ON/OFF, and, optionally, earphone socket.
Application: CQP4000U without tone equipment, and all versions of CQP4000U for special control purposes.

CB4003 contains loudspeaker/microphone, transmitter key, two extra push buttons one controlling the tone key and one controlling LS ON/OFF, and optionally earphone socket.
Application: CQP4000U with tone equipment.

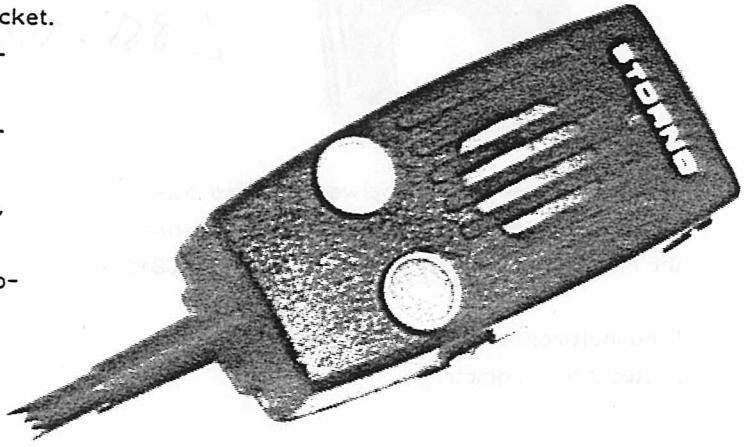

CIRCUIT DESCRIPTION

The amplifier consists of a self stabilizating input amplifier, Q101, with DC feedback. It is followed by an emitter follower, Q102, which provides for a low output impedance. This is necessary to attenuate (~ 30 dB) the signal from the internal microphone in the CQP4000 radio.

The amplifier has a low pass filter characteristic with 3 dB frequency at 7.2 kHz and a 6 dB/oct. roll off. It is designed on discrete components to obtain the best possible chance to avoid distortion caused by RF radiation from the radio.

A transistor switch, Q103, feeds the 7.2V supply voltage to the amplifier during TX. Components related to earphone and loudspeaker are also included on the board.

SPECIFICATIONS

Supply Voltage
6.1 V to 8.6 V

Current Consumption at 7.2 V supply
during TX: 2.1 mA
standby: 325 uA

Gain
25 dB ± 2 dB at 1 kHz

Distortion
1.5% nom., max. 3% at 1 kHz and
Vin = 10 mV RMS

Sensitivity
0.55 mV RMS, 1 kHz input signal for
60% deviation

Input Impedance
25 kOhm at 1 kHz

Output Impedance
65 Ohm at 1 kHz

Temperature Range
$-25^{o}C$ to $+60^{o}C$

Storno

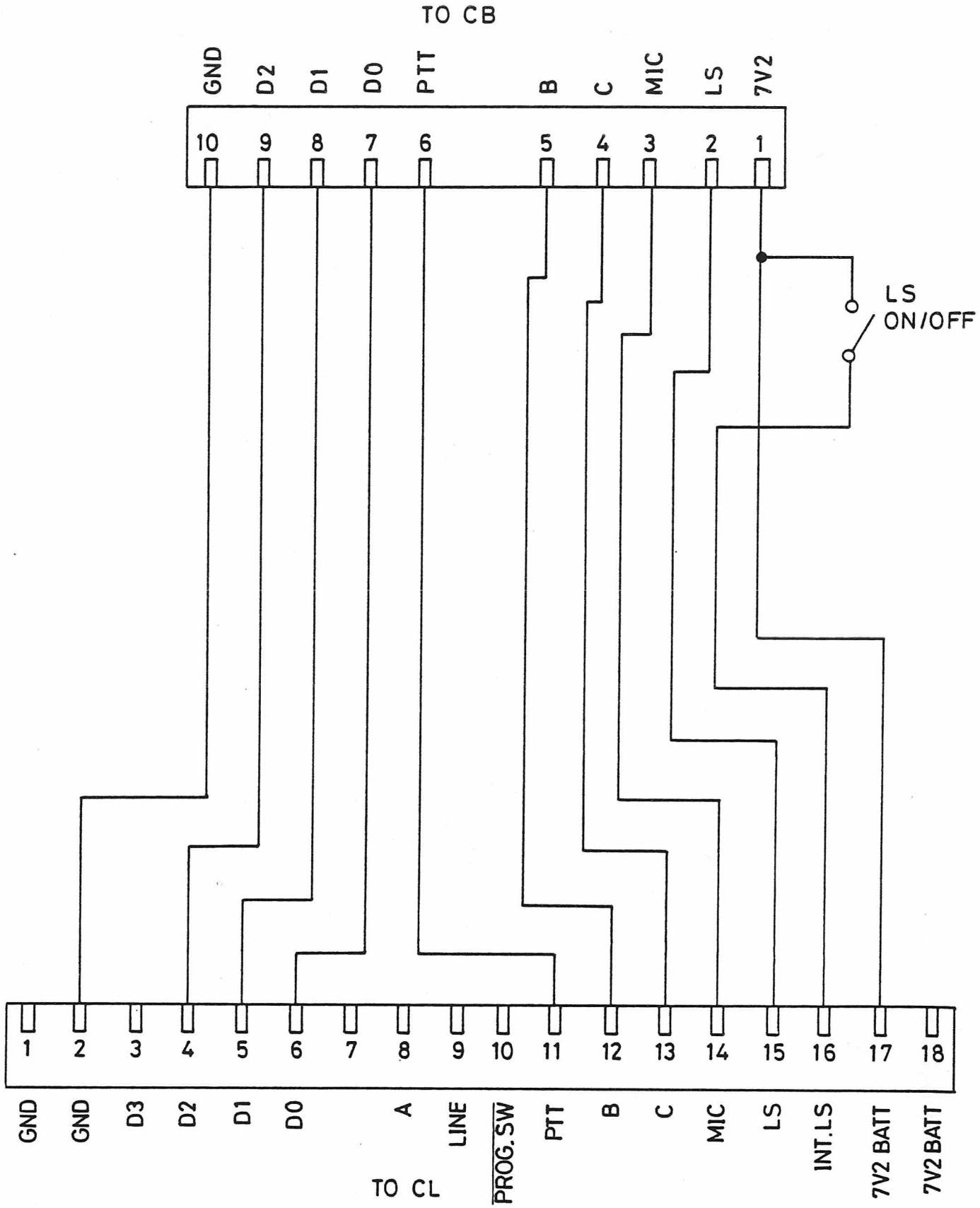

CQP 4000
INTERCONNECTION BETWEEN
CONTROL BOX AND RADIO

D404.062

Storno

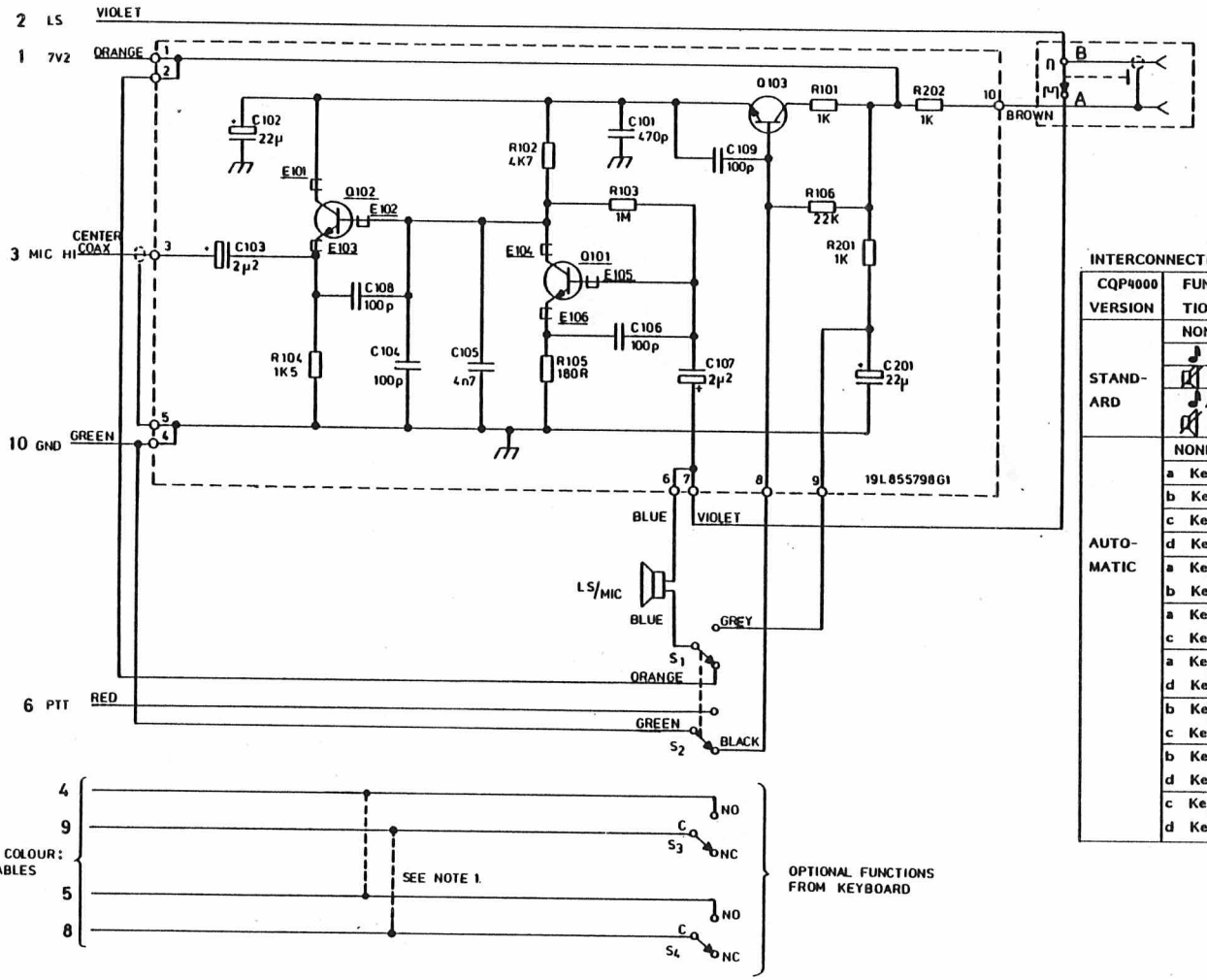

INTERCONNECTION TABLE FOR SWITCHES S3 AND S4

CQP4000 VERSION	FUNCTION	LINES	S3 NO	S3 C	S4 NO	S4 C	CB VERS.	CB NUMBER	ADJ. GASKET
STANDARD	NONE						4001	L855804G1	BROWN
		B/D3	Brown	Yellow			4002	L855859G1	RED
		A/D3	Black	Yellow			4002	L855859G2	ORANGE
	AND	B/D3	Brown	Yellow			4003	L855860G1	YELLOW
		A/D3			Black	Yellow			
AUTOMATIC	NONE						4001	L855804G1	BROWN
	a Key34	C/D2	White	Yellow			4002	L855859G3	BROWN
	b Key24	B/D2	Brown	Yellow			4002	L855859G1	RED
	c Key14	A/D2	Black	Yellow			4002	L855859G2	ORANGE
	d Key13	A/D3	Black	Blue			4002	L855859G4	YELLOW
	a Key34	C/D2	White	Yellow			4003	L855860G2	BROWN
	b Key24	B/D2			Brown	Yellow			
	a Key34	C/D2	White	Yellow			4003	L855860G3	RED
	c Key14	A/D2			Black	Yellow			
	a Key34	C/D2	White	Yellow			4003	L855860G4	ORANGE
	d Key13	A/D3			Black	Blue			
	b Key24	B/D2	Brown	Yellow			4003	L855860G1	YELLOW
	c Key14	A/D2			Black	Yellow			
	b Key24	B/D2	Brown	Yellow			4003	L855860G5	GREEN
	d Key13	A/D3			Black	Blue			
	c Key14	A/D2	Black	Yellow			4003	L855860G6	BLUE
	d Key13	A/D3			Black	Blue			

NOTE :

1. IN CB4003 VERSIONS 19L855860G1, G2 AND G3 TERMINAL C OF S3 AND S4 IS CONNECTED TO THE SAME INPUT LINE AND HENCE MUST BE INTERCONNECTED WITH A 40MM PIECE OF YELLOW WIRE 19J707718P4.
   IN 19L855860G6 THE NO TERMINALS MUST BE INTERCONNECTED WITH A PIECE OF BLACK WIRE 19J707718P10.

NOTE: COMPONENTS Q101 AND Q102 ARE MOUNTED ON COMPONENT SIDE OF PWB

CONTROL BOX CB400X

D404.008/3

Storno

Storno

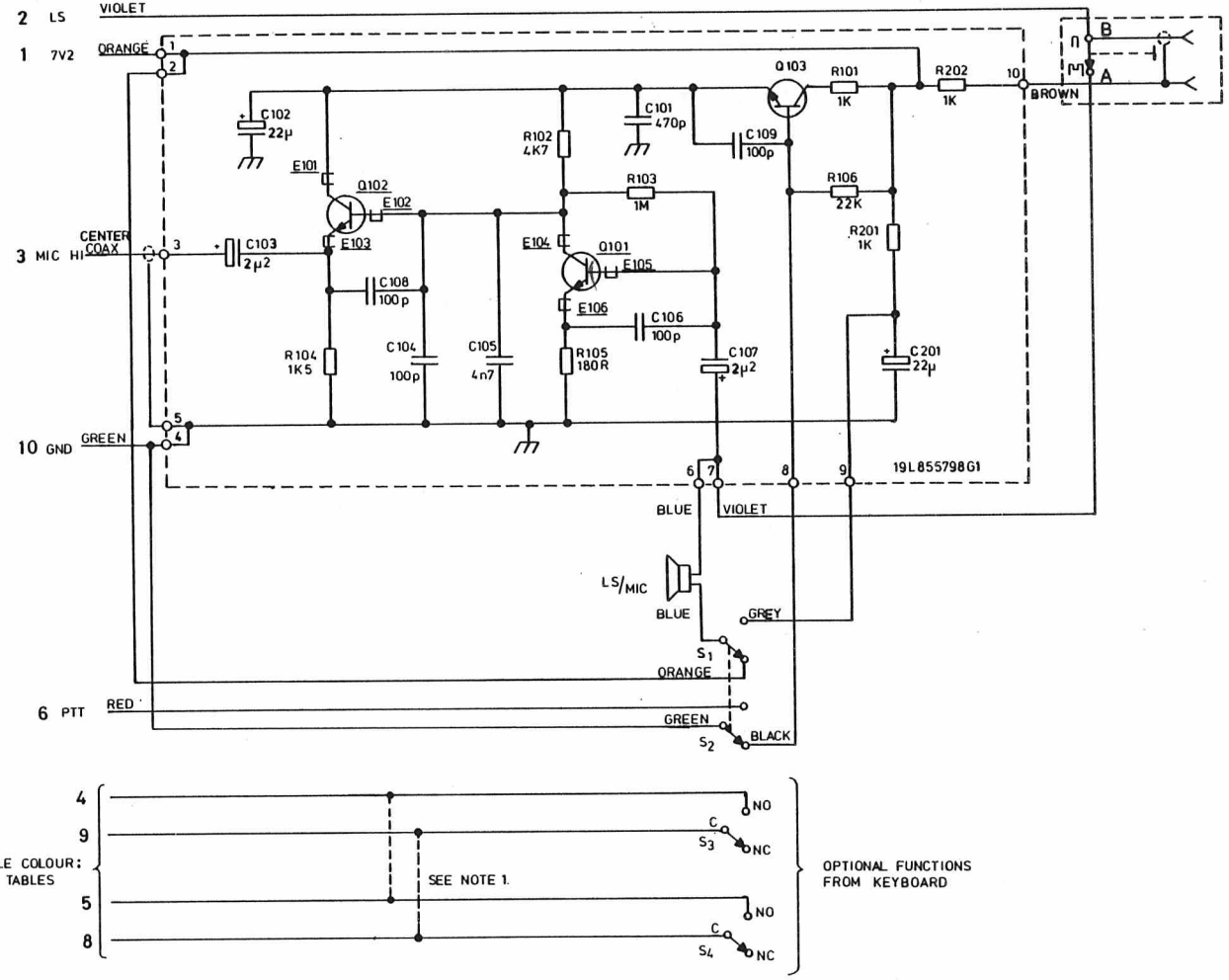

EARPHONE SOCKET. OPTIONAL

INTERCONNECTION TABLE FOR SWITCHES S3 AND S4

CQP4000 VERSION	FUNC-TION	LINES	S3 NO	S3 C	S4 NO	S4 C	CB VERS.	CB NUMBER
STAND-ARD	NONE						4001	L855804G1
		B/D3	Brown	Yellow			4002	L855859G1
		A/D3	Black	Yellow			4002	L855859G2
	AND	B/D3	Brown	Yellow			4003	L855860G1
		A/D3			Black	Yellow		
AUTO-MATIC	NONE						4001	L855804G1
	a Key34	C/D2	White	Yellow			4002	L855859G3
	b Key24	B/D2	Brown	Yellow			4002	L855859G1
	c Key14	A/D2	Black	Yellow			4002	L855859G2
	d Key13	A/D3	Black	Blue			4002	L855859G4
	a Key34	C/D2	White	Yellow			4003	L855860G2
	b Key24	B/D2			Brown	Yellow		
	a Key34	C/D2	White	Yellow			4003	L855860G3
	c Key14	A/D2			Black	Yellow		
	a Key34	C/D2	White	Yellow			4003	L855860G4
	d Key13	A/D3			Black	Blue		
	b Key24	B/D2	Brown	Yellow			4003	L855860G1
	c Key14	A/D2			Black	Yellow		
	b Key24	B/D2	Brown	Yellow			4003	L855860G5
	d Key13	A/D3			Black	Blue		
	c Key14	A/D2	Black	Yellow			4003	L855860G6
	d Key13	A/D3			Black	Blue		

NOTE :

1. IN CB4003 VERSIONS 19L855860G1, G2 AND G3 TERMINAL C OF S3 AND S4 IS CONNECTED TO THE SAME INPUT LINE AND HENCE MUST BE INTERCONNECTED WITH A 40MM PIECE OF YELLOW WIRE 19J707718P4.
   IN 19L855860G6 THE NO TERMINALS MUST BE INTERCONNECTED WITH A PIECE OF BLACK WIRE 19J707718P10.

NOTE: COMPONENTS Q101 AND Q102 ARE MOUNTED ON COMPONENT SIDE OF PWB

CONTROL BOX CB400X

D404.0081/2

Storno

COMPONENT SIDE

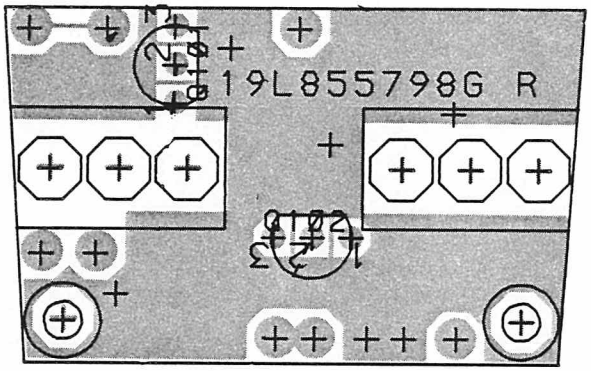

CHIP SIDE

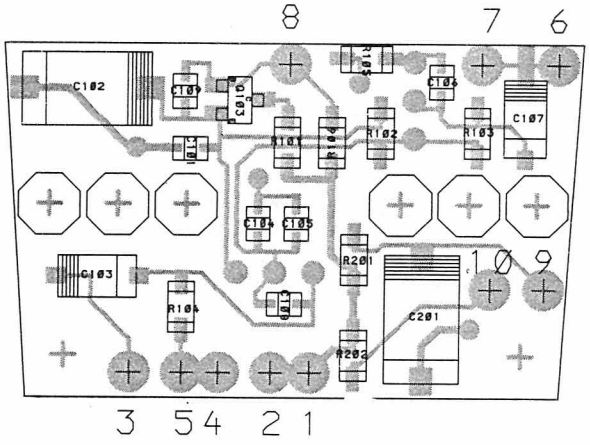

CONTROL BOX CB400X
COMPONENT LAYOUT

MOUNTED BOARD CODE NO. L855798G1 D404.009

ITEM NUMBER	DESCRIPTION
L855804G1	CB 4001 ASM
L855804G11	CB 4001 ASM W. EARPHONE

* K805788G3 * CB 4001 MECH. KIT ASM.

P A R T S L I S T :

CIRCUIT POSITION	COMPONENT ITEM NUMBER	COMPONENT DESCRIPTION	QUANTITY	
* 0002	* K805788G3	* CB 4001 MECH. KIT ASM.:	* 1	ALL
* 0003	* J707586P1	* GASKET, ADJ.- 'BROWN'	* 1	ALL
0007	K805738G1	KIT, EARPHONE ASM.-	1	F.-G11

0007 : K805738G1 : KIT, EARPHONE ASM- F. CB 400X :

0002	J708770P1	SOCKET, 'LEMO'-	1
0003	J707718P1	WIRE, STRANDED 'BROWN'	0.05M
0004	J707718P7	WIRE, STRANDED 'VIOLET'	0.04M
0005	J708634P2	TERMINAL, SOLDER-	1

* 0002 : * K805788G3 : * CB 4001 MECH. KIT ASM.:

S001	J709320P1	SWITCH, MICRO- SPDT	1	
S002	J709320P1	SWITCH, MICRO- SPDT	1	
0002	L855837G1	HOUSING, MODIFIED-	1	
0003	J706854P1	NAME PLATE ('STORNO')	1	
0004	J709147G2 *	COVER ASM	1	
0005	J706960P1	PACKING	1	
0006	J709138P1	NETTING	1	
0007	J709318P1	GASKET RUBBER	1	
0008	J709393G1	WASHER, W. SPEC. SURFACE	1	
0009	J709056P1	MICROPHONE 10R	1	
0010	J709087P1	BUTTON SCREW	1	
0011	J707200P2	O-RING 4.0MM	1	
0012	J709142P1	WASHER	1	
0013	J709141P1	SPRING	1	
0014	J709143P1	BUTTON,-("RED"),F.PTT-SWITCH	1	
0015	J709390P1	SPACER, NON-METALLIC-, F.PWB	2	
0016	J708300P106	SCREEW PAN HD M-2.2X12.0 BZ	2	
0017	L855798G1	CPNT BD ASM F. CB 400X	1	SEE: PAGE 2
0018	J709134P1	CABLE CLAMP	1	
0019	J708003P1	GROMMET	1	

CIRCUIT POSITION		COMPONENT ITEM NUMBER		COMPONENT DESCRIPTION	QUANTITY	
0020		J709140P1		PACKING	1	
0021		J709136P1		LABEL	1	
0022		J706212P204		SCREW PAN HD SZ-4.0 X 9.5	8	
0023		M906065G1		CONNECTOR ASM	1	SEE: PAGE 3
0028		J707718P3		WIRE, STRANDED 'ORANGE'	0.08M	
0029		J707718P5		WIRE, STRANDED 'GREEN' *	0.09M	
0030		J707718P8		WIRE, STRANDED 'GRAY'	0.08M	
0031		J707718P10		WIRE, STRANDED 'BLACK'	0.08M	
0033	*	A701293P10	*	SLVG DIL D-3.2X2.30 'GREEN'	0.01M	
0034		A701293P113	*	SLVG DIL D-4.4X3.30 'TPRT'	0.03M	
0035	*	A701293P10	*	SLVG DIL D-3.2X2.30 'GREEN'	0.01M	
* 0036	*	J706313P1	*	RIVET, TUBULAR- D-6.0, L-9.0	1	
0017 :		L855798G1 :		CPNT BD ASM F. CB 400X :		
C101		J707438P3		CAP CER CL2 470P 10% 50V	1	
C102		A700045P9		CAP TA SOL 22U 20% 10V	1	
C103		A700045P7		CAP TA SOL 2U2 20% 10V	1	
C104		J707436P61		CAP CER NPO 100P 5% 50V	1	
C105		J707438P10		CAP CER CL2 4N7 10% 50V	1	
C106		J707436P61		CAP CER NPO 100P 5% 50V	1	
C107		A700045P7		CAP TA SOL 2U2 20% 10V	1	
C108		J707436P61		CAP CER NPO 100P 5% 50V	1	
C109		J707436P61		CAP CER NPO 100P 5% 50V	1	
C201		A700045P9		CAP TA SOL 22U 20% 10V	1	
E101		J706002P2		CORE, FERR.-	1	
E102		J706002P2		CORE, FERR.-	1	
E103		J706002P2		CORE, FERR.-	1	
E104		J706002P2		CORE, FERR.-	1	
E105		J706002P2		CORE, FERR.-	1	
E106		J706002P2		CORE, FERR.-	1	
Q101		J707511P1		TSTR NPN SI BC 548A/B	1	
Q102		J707511P1		TSTR NPN SI BC 548A/B	1	
Q103		J707386P1		TSTR NPN SI BCW 32	1	
R101		J707385P102		RES MFILM 1K0 5% 1/8W	1	
R102		J707385P472		RES MFILM 4K7 5% 1/8W	1	
R103		J707385P105		RES MFILM 1M0 10% 1/8W	1	
R104		J707385P152		RES MFILM 1K5 5% 1/8W	1	
R105		J707385P181		RES MFILM 180R 5% 1/8W	1	
R106		J707385P223		RES MFILM 22K 5% 1/8W	1	
R201		J707385P102		RES MFILM 1K0 5% 1/8W	1	
R202		J707385P102		RES MFILM 1K0 5% 1/8W	1	
0002		L855799P1R0		BD PW, REVISION NO.0	(1)	

CONTINUED ON LAST PAGE: PAGE 3.

CIRCUIT POSITION	COMPONENT ITEM NUMBER	COMPONENT DESCRIPTION	QUANTITY
0023 :	M906065G1 :	CONNECTOR ASM :	
0001	M906065P1	CONNECTOR ASM	
0002	M905973P1	CONNECTOR	1
0003	M905974P1	CONNECTOR COVER	1
0004	J709170G1	SPRING CONTACT MODIF	10
0005	K805724G1	CABLE ASM	1
0006	J708865P1	GUIDE ROD	2
0007	J708868P1	CONNECTOR SCREW	1

	ITEM NUMBER		DESCRIPTION
	L855859G1	*	CB 4002 ASM.,W.FUNC.: TONE KEY OR KEY 24
	L855859G11	*	CB 4002 ASM W. EARPH.+ TONE KEY / KEY 24
	L855859G2	*	CB 4002 ASM.,W. LS ON/OFF KEY OR KEY 14
	L855859G12	*	CB 4002 ASM W.EARPH.+ LS ON/OFF / KEY 14
	L855859G3	*	CB 4002 ASM.,W. FUNC.: KEY 34
	L855859G13	*	CB 4002 ASM.,W. EARPHONE + KEY 34
	L855859G4	*	CB 4002 ASM.,W. FUNC.: KEY 13
	L855859G14	*	CB 4002 ASM.,W. EARPHONE+ KEY 13
*	K805788G1	*	CB 4002 MECH. KIT ASM.

P A R T S L I S T :

	CIRCUIT POSITION		COMPONENT ITEM NUMBER		COMPONENT DESCRIPTION		COMPONENT
*	0002	*	K805788G1	*	CB 4002 MECH. KIT ASM.	*	1 ALL
*	0003	*	J707586P2	*	GASKET, ADJUSTM.- 'RED'	*	1 -G1/-G11
	OR:						
*	0003	*	J707586P3	*	GASKET, ADJUSTM.- 'ORANGE'	*	1 -G2/-G12
	OR:						
*	0003	*	J707586P1	*	GASKET, ADJUSTM.- 'BROWN'	*	1 -G3/-G13
	OR:						
*	0003	*	J707586P4	*	GASKET, ADJUSTM.- 'YELLOW'	*	1 -G4/-G14
	0007		K805738G1		KIT, EARPHONE ASM.-		1 G11/-G14

0002 :	K805738G1 :	KIT, EARPHONE ASM- F. CB 400X :	
0002	J708770P1	SOCKET, 'LEMO'-	1
0003	J707718P1	WIRE, STRANDED 'BROWN'	0.05M
0004	J707718P7	WIRE, STRANDED 'VIOLET'	0.04M
0005	J708634P2	TERMINAL, SOLDER-	1

* 0002 :	* K805788G1 :	* CB 4002 MECH. KIT ASM. :	
S001	J709320P1	SWITCH, MICRO- SPDT	1
S002	J709320P1	SWITCH, MICRO- SPDT	1
S003	J708023P3	SWITCH, PUSH BUTTON-	1
0002	L855837G2	HOUSING, MODIFIED-	1
0003	J706854P1	NAME PLATE ('STORNO')-	1
0004	J709147G2 *	COVER ASM	1
0005	J706960P1	PACKING	1
0006	J709138P1	NETTING	1
0007	J709318P1	GASKET RUBBER	1
0008	J709393G1	WASHER, W. SPEC. SURFACE	1

CIRCUIT POSITION		COMPONENT ITEM NUMBER		COMPONENT DESCRIPTION		COMPONENT	
0009		J709056P1		MICROPHONE 10R		1	
0010		J709087P1		BUTTON SCREW		1	
0011		J707200P2		O-RING 4.0MM		1	
0012		J709142P1		WASHER		1	
0013		J709141P1		SPRING		1	
0014		J709143P1		BUTTON,-("RED"),F.PTT-SWITCH		1	
0015		J709390P1		SPACER, NON-METALLIC- F.PWB		2	
0016		J708300P106		SCREEW PAN HD M-2.2X12.0 BZ		2	
0017		L855798G1		CPNT BD ASM F. CB 400X		1	(SEE: BELOW)
0018		J709134P1		CABLE CLAMP		1	
0019		J708003P1		GROMMET		1	
0020		J709140P1		PACKING		1	
0021		J709136P2		LABEL		1	
0022		J706212P204		SCREW PAN HD SZ 4.0X9.5		8	
0023		M906065G1		CONNECTOR ASM		1	SEE: PAGE 3
0025		J709144G1		BUTTON ASM.,("RED" PUSH PAD)		1	SEE: PAGE 3
*		*		*		*	
0027		J708543P6		WASH FLAT 6.4/12.5X1.0		1	
0028		J707718P3		WIRE, STRANDED 'ORANGE'		0.08M	
0029		J707718P5		WIRE, STRANDED 'GREEN'	*	0.09M	
0030		J707718P8		WIRE, STRANDED 'GRAY'		0.08M	
0031		J707718P10		WIRE, STRANDED 'BLACK'		0.08M	
0033	*	A701293P10	*	SLVG DIL D-3.2X2.30 'GREEN'		0.01M	
0034		A701293P113	*	SLVG DIL D-4.4X3.30 'TRPT'		0.03M	
0035	*	A701293P10	*	SLVG DIL D-3.2X2.30 'GREEN'		0.01M	
0036	*	J706313P1	*	RIVET, TUBULAR- D-6.0, L-9.0		1	

0017 :	L855798G1 :	CPNT BD ASM F. CB 400X :	
C101	J707438P3	CAP CER CL2 470P 10% 50V	1
C102	A700045P9	CAP TA SOL 22U 20% 10V	1
C103	A700045P7	CAP TA SOL 2U2 20% 10V	1
C104	J707436P61	CAP CER NPO 100P 5% 50V	1
C105	J707438P10	CAP CER CL2 4N7 10% 50V	1
C106	J707436P61	CAP CER NPO 100P 5% 50V	1
C107	A700045P7	CAP TA SOL 2U2 20% 10V	1
C108	J707436P61	CAP CER NPO 100P 5% 50V	1
C109	J707436P61	CAP CER NPO 100P 5% 50V	1
C201	A700045P9	CAP TA SOL 22U 20% 10V	1
E101	J706002P2	CORE, FERR.-	1
E102	J706002P2	CORE, FERR.-	1
E103	J706002P2	CORE, FERR.-	1
E104	J706002P2	CORE, FERR.-	1
E105	J706002P2	CORE, FERR.-	1
E106	J706002P2	CORE, FERR.-	1
Q101	J707511P1	TSTR NPN SI BC 548A/B	1
Q102	J707511P1	TSTR NPN SI BC 548A/B	1

CIRCUIT POSITION	COMPONENT ITEM NUMBER	COMPONENT DESCRIPTION	COMPONENT
Q103	J707386P1	TSTR NPN SI BCW 32	1
R101	J707385P102	RES MFILM 1K0 5% 1/8W	1
R102	J707385P472	RES MFILM 4K7 5% 1/8W	1
R103	J707385P105	RES MFILM 1M0 10% 1/8W	1
R104	J707385P152	RES MFILM 1K5 5% 1/8W	1
R105	J707385P181	RES MFILM 180R 5% 1/8W	1
R106	J707385P223	RES MFILM 22K 5% 1/8W	1
R201	J707385P102	RES MFILM 1K0 5% 1/8W	1
R202	J707385P102	RES MFILM 1K0 5% 1/8W	1
0002	L855799P1R0	BD PW, REVISION NO.0	(1)
0023 :	M906065G1 :	CONNECTOR ASM :	
0002	M905973P1	CONNECTOR	1
0003	M905974P1	CONNECTOR COVER	1
0004	J709170G1	SPRING CONTACT MODIF	10
0005	K805724G1	CABLE ASM	1
0006	J708865P1	GUIDE ROD	2
0007	J708868P1	CONNECTOR SCREW	1
0025 :	J709144G1 :	BUTTON ASM,-("RED" PUSHPAD) :	
0002	J709145P3	BUTTON RED	1
0003	J709146G1 *	BUSH WITH SURFACE	1
0004	A701648P4	SIL RUB SEALANT RTV-3140	0.001KG

ITEM NUMBER		DESCRIPTION
L855860G1	*	CB 4003 ASM W. LS ON/OFF KEY + TONE KEY OR W.FUNCT.: KEY 24 + KEY 14
L855860G11	*	CB 4003 ASM W. EARPH.+ LS ON/OFF + T.KEY OR +: KEY 24 + KEY 14
L855860G2	*	CB 4003 ASM W. FUNCT.: KEY 34 + KEY 24
L855860G12	*	CB 4003 ASM W. EARPH. + KEY 34 + KEY 24
L855860G3	*	CB 4003 ASM W. FUNCT.: KEY 34 + KEY 14
L855860G13	*	CB 4003 ASM W. EARPH. + KEY 34 + KEY 14
L855860G4	*	CB 4003 ASM W. FUNCT.: KEY 34 + KEY 13
L855860G14	*	CB 4003 ASM W. EARPH. + KEY 34 + KEY 13
L855860G5	*	CB 4003 ASM W. FUNCT.: KEY 24 + KEY 13
L855860G15	*	CB 4003 ASM W. EARPH. + KEY 24 + KEY 13
L855860G6	*	CB 4003 ASM W. FUNCT.: KEY 14 + KEY 13
L855860G16	*	CB 4003 ASM W. EARPH. + KEY 14 + KEY 13

* K805788G2 * SUB ASM.: CB 4003 MECH. KIT ASM

P A R T S L I S T :

CIRCUIT POSITION	COMPONENT ITEM NUMBER	COMPONENT DESCRIPTION	QUANTITY
* 0002	* K805788G2	* CB 4003 MECH. KIT ASM	* 1 ALL
* 0003	* J707586P4	* GASKET, ADJUSTM.- 'YELLOW'	* 1 -G1/-G11
OR:			
* 0003	* J707586P1	* GASKET, ADJUSTM.- 'BROWN'	* 1 -G2/-G12
OR:			
* 0003	* J707586P2	* GASKET, ADJUSTM.- 'RED'	* 1 -G3/-G13
OR:			
* 0003	* J707586P3	* GASKET, ADJUSTM.- 'ORANGE'	* 1 -G4/-G14
OR:			
* 0003	* J707586P5	* GASKET, ADJUSTM.- 'GREEN'	* 1 -G5/-G15
OR:			
* 0003	* J707586P6	* GASKET, ADJUSTM.- 'BLUE'	* 1 -G6/-G16
0007	K805738G1	KIT, EARPHONE ASM.-	1 G11/-G16

0007 :	K805738G1 :	KIT, EARPHONE ASM- F. CB 400X :	
0002	J708770P1	SOCKET, 'LEMO'-	1
0003	J707718P1	WIRE, STRANDED 'BROWN'	0.05M
0004	J707718P7	WIRE, STRANDED 'VIOLET'	0.04M
0005	J708634P2	TERMINAL, SOLDER-	1

CONTINUED ON NEXT PAGE: PAGE 2.

CIRCUIT POSITION		COMPONENT ITEM NUMBER		COMPONENT DESCRIPTION	QUANTITY	
* 0002 :	*	K805788G2 :	*	CB 4003 MECH. KIT ASM :		
S001		J709320P1		SWITCH, MICRO- SPDT	1	
S002		J709320P1		SWITCH, MICRO- SPDT	1	
S003		J708023P3		SWITCH, PUSH BUTTON-	1	
S004		J708023P3		SWITCH, PUSH BUTTON-	1	
0002		L855837G3		HOUSING, MODIFIED-	1	
0003		J706854P1		NAME PLATE ('STORNO')	1	
0004		J709147G2	*	COVER ASM	1	
0005		J706960P1		PACKING	1	
0006		J709138P1		NETTING	1	
0007		J709318P1		GASKET RUBBER	1	
0008		J709393G1		WASHER, W. SPEC SURFACE	1	
0009		J709056P1		MICROPHONE 10R	1	
0010		J709087P1		BUTTON SCREW	1	
0011		J707200P2		O-RING 4.0MM	1	
0012		J709142P1		WASHER	1	
0013		J709141P1		SPRING	1	
0014		J709143P1		BUTTON,-("RED") F.PTT-SWITCH	1	
0015		J709390P1		SPACER, NON-METALLIC- F. PWB	2	
0016		J708300P106		SCREEW PAN H 2.2X12.0 BZ	2	
0017		L855798G1		CPNT BD ASM F. CB 400X	1	(SEE: BELOW)
0018		J709134P1		CABLE CLAMP	1	
0019		J708003P1		GROMMET	1	
0020		J709140P1		PACKING	1	
0021		J709136P3		LABEL	1	
0022		J706212P204		SCREW PAN HD SZ 4.0X9.5	8	
0023		M906065G1		CONNECTOR ASM	1	SEE: PAGE 3
0025		J709144G1		BUTTON ASM,-("RED" PUSH PAD)	1	SEE: PAGE 3
0026		J709144G2		BUTTON ASM,-("GREEN" PUSHPAD)	1	SEE: PAGE 4
0027		J708543P6		WASH FLAT 6.4/12.5X1.0	2	
0028		J707718P3		WIRE, STRANDED 'ORANGE'	0.08M	
0029		J707718P5		WIRE, STRANDED 'GREEN' *	0.09M	
0030		J707718P8		WIRE, STRANDED 'GRAY'	0.08M	
0031		J707718P10		WIRE, STRANDED 'BLACK'	0.08M	
0032		A701268P4		WIRE, 'YELLOW'	0.04M	
0033	*	A701293P10	*	SLVG DIL D-3.2X2.30 'GREEN'	0.01M	
0034		A701293P113	*	SLVG DIL D-4.4X3.30 'TRPT'	0.03M	
0035	*	A701293P10	*	SLVG DIL D-3.2X2.30 'GREEN'	0.01M	
* 0036	*	J706313P1	*	RIVET, TUBULAR- D-6.0, L-9.0	1	
0017 :		L855798G1 :		CPNT BD ASM F. CB 400X :		
C101		J707438P3		CAP CER CL2 470P 10% 50V	1	

CIRCUIT POSITION	COMPONENT ITEM NUMBER	COMPONENT DESCRIPTION	QUANTITY
C102	A700045P9	CAP TA SOL 22U 20% 10V	1
C103	A700045P7	CAP TA SOL 2U2 20% 10V	1
C104	J707436P61	CAP CER NPO 100P 5% 50V	1
C105	J707438P10	CAP CER CL2 4N7 10% 50V	1
C106	J707436P61	CAP CER NPO 100P 5% 50V	1
C107	A700045P7	CAP TA SOL 2U2 20% 10V	1
C108	J707436P61	CAP CER NPO 100P 5% 50V	1
C109	J707436P61	CAP CER NPO 100P 5% 50V	1
C201	A700045P9	CAP TA SOL 22U 20% 10V	1
E101	J706002P2	CORE, FERR.-	1
E102	J706002P2	CORE, FERR.-	1
E103	J706002P2	CORE, FERR.-	1
E104	J706002P2	CORE, FERR.-	1
E105	J706002P2	CORE, FERR.-	1
E106	J706002P2	CORE, FERR.-	1
Q101	J707511P1	TSTR NPN SI BC 548A/B	1
Q102	J707511P1	TSTR NPN SI BC 548A/B	1
Q103	J707386P1	TSTR NPN SI BCW 32	1
R101	J707385P102	RES MFILM 1K0 5% 1/8W	1
R102	J707385P472	RES MFILM 4K7 5% 1/8W	1
R103	J707385P105	RES MFILM 1M0 10% 1/8W	1
R104	J707385P152	RES MFILM 1K5 5% 1/8W	1
R105	J707385P181	RES MFILM 180R 5% 1/8W	1
R106	J707385P223	RES MFILM 22K 5% 1/8W	1
R201	J707385P102	RES MFILM 1K0 5% 1/8W	1
R202	J707385P102	RES MFILM 1K0 5% 1/8W	1
0002	L855799P1R0	BD PW, REVISION NO.0	
0023 :	M906065G1 :	CONNECTOR ASM :	
0001	M906065P1	CONNECTOR ASM	
0002	M905973P1	CONNECTOR	1
0003	M905974P1	CONNECTOR COVER	1
0004	J709170G1	SPRING CONTACT MODIF	10
0005	K805724G1	CABLE ASM	1
0006	J708865P1	GUIDE ROD	2
0007	J708868P1	CONNECTOR SCREW	1
0025 :	J709144G1 :	BUTTON ASM,-("RED" PUSHPAD) :	
0002	J709145P3	BUTTON, PUSHPAD- 'RED'	1
0003	J709146G1 *	BUSH WITH SURFACE	1
0004	A701648P4	SIL RUB SEALANT RTV-3140	0.001KG

CONTINUED ON LAST PAGE: PAGE 4.

CIRCUIT POSITION	COMPONENT ITEM NUMBER	COMPONENT DESCRIPTION	QUANTITY
0026 :	J709144G2 :	BUTTON ASM,-("GREEN" PUSHPAD) :	
0002	J709145P1	BUTTON, PUSHPAD- 'GREEN'	1
0003	J709146G1 *	BUSH WITH SURFACE	1
0004	A701648P4	SIL RUB SEALANT RTV-3140	0.001KG

Storno

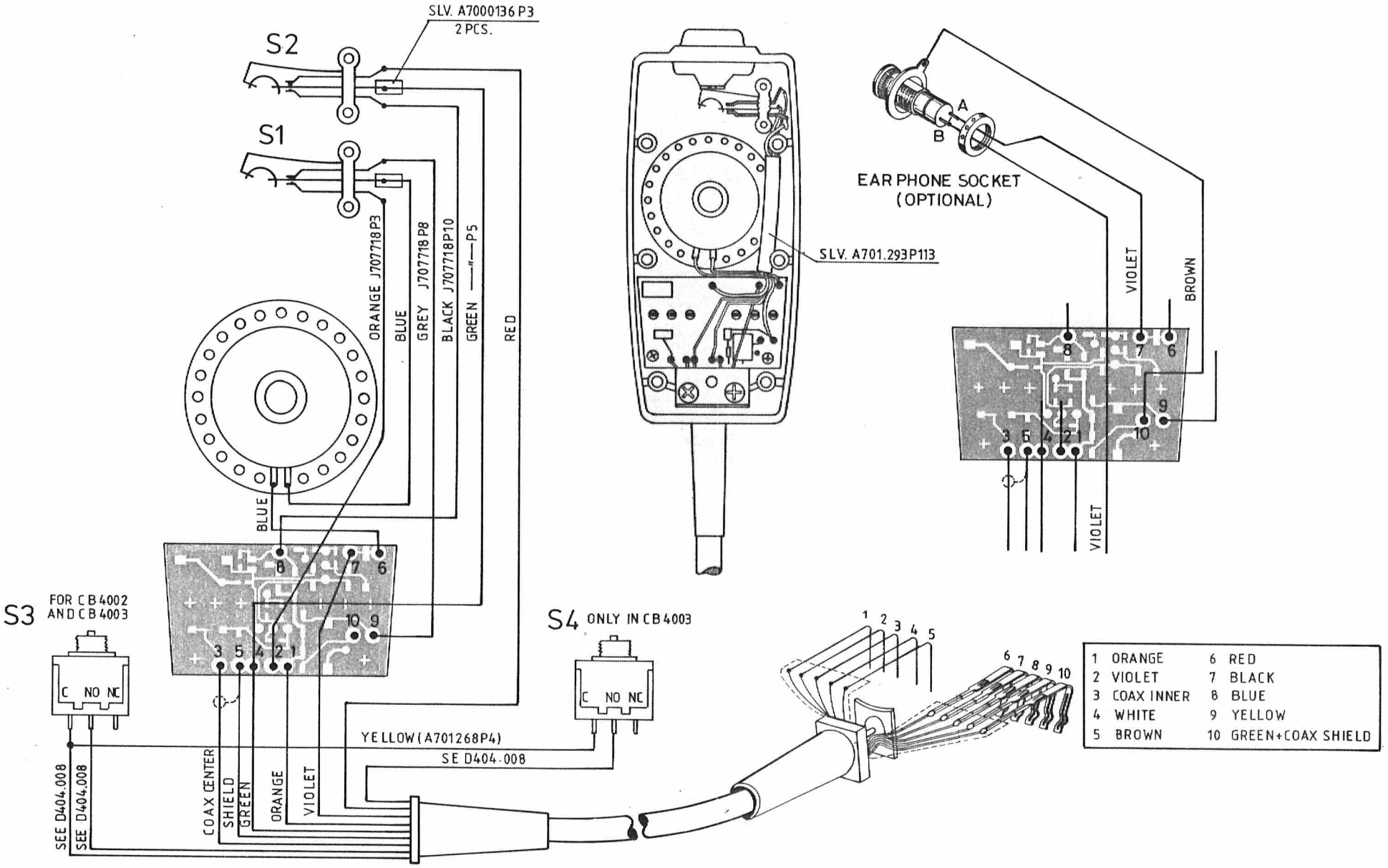

WIRING AND CABLE LAYOUT
FOR CB400X

M405.198

Storno

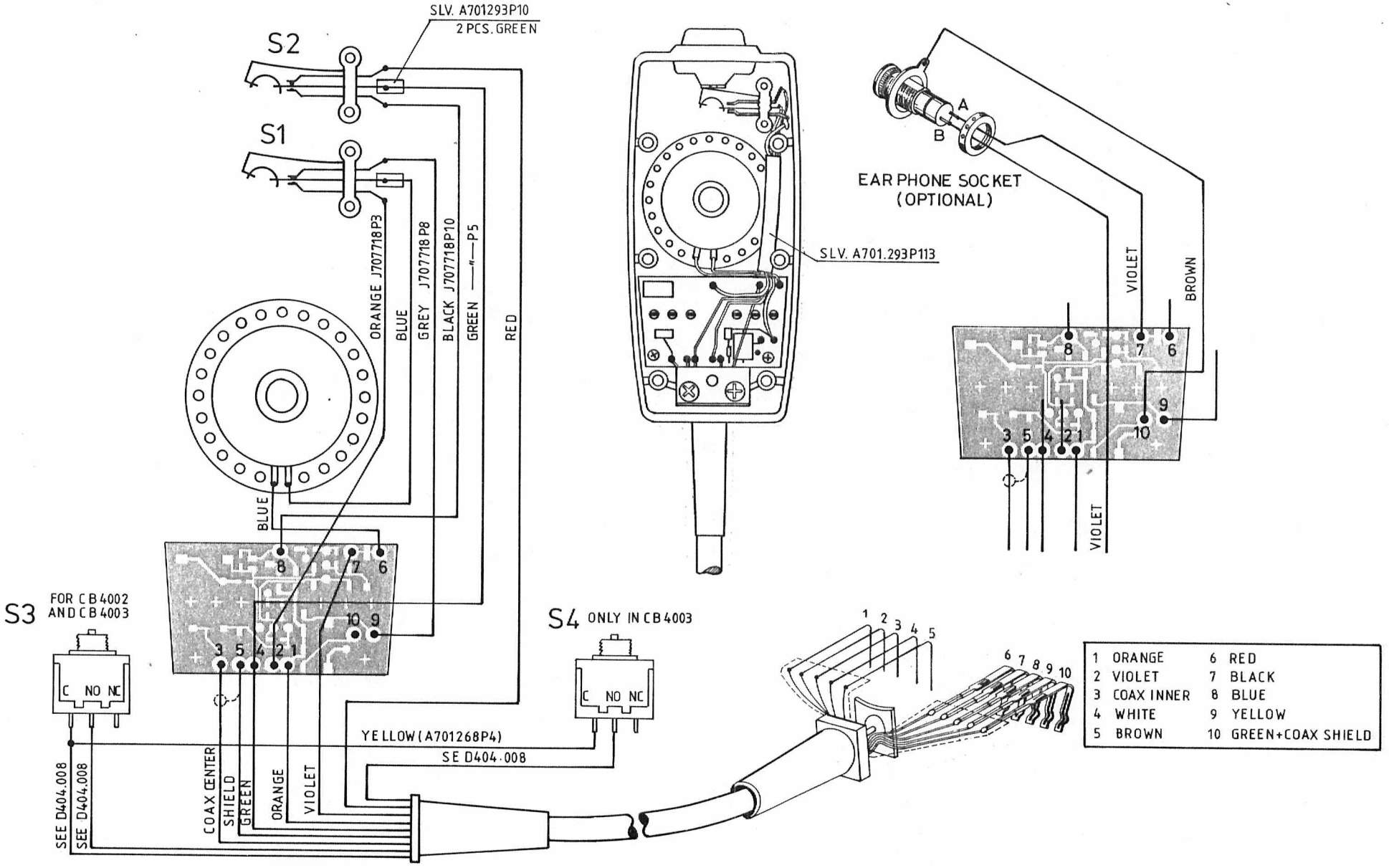

WIRING AND CABLE LAYOUT
FOR CB400X

M405.198/2

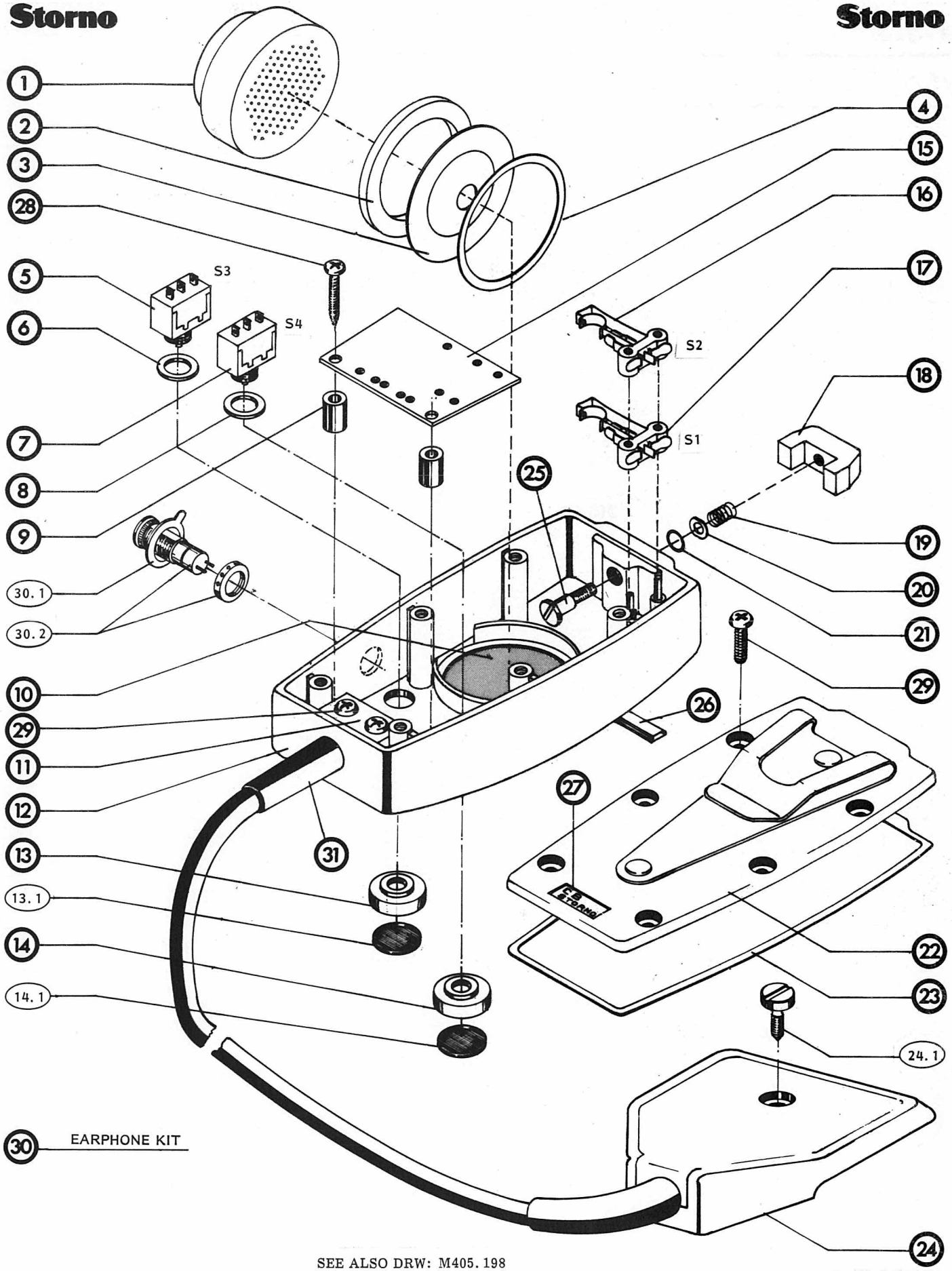

SEE ALSO DRW: M405.198

MECHANICAL LAYOUT & PART NUMBERS
SCHEMA MECANIQUE & NUMEROS DE PIECES
MECHANISCHE ZEICHNUNG & TEILENUMMERN

CB400X

M405.197/2

POS	CODE No.	DESCRIPTION	QTY.
1	J709056P1	Microphone 10R	1
2	J706960P1	Packing	1
3	J709393G1	Washer with surface	1
4	J709318P1	Gasket Rubber	1
5	J708023P3	S3-Micro Switch (only in CB4002 & CB4003)	1
6	J708543P6	Washer Flat (only in CB4002 & CB4003)	1
7	J708023P3	S4-Micro Switch (only in CB4003)	1
8	J708543P6	Washer Flat (only in CB4003)	1
9	J709390P1	Spacer Non Metalic	2
10	J709138P1	Netting	1
11	J709134P1	Cable Clamp	1
12	L855837G1	Housing Modified CB4001	1
	L855837G2	Housing Modified CB4002	1
	L855837G3	Housing Modified CB4003	1
13	J709144G1	Button Asm.(only in CB4002 & CB4003)	1
13.1	J709145P3	Red Pushpad (only in CB4002 & CB4003)	1
14	J709144G2	Button Asm. (only i CB4003)	1
14.1	J709145P1	Green Pushpad (only in CB4003)	1
15	L855798G1	Component Board Asm.	1
16	J709320P1	S2-Switch Micro	1
17	J709320P1	S1-Switch Micro	1
18	J709143P1	Button (Red) PTT.	1
19	J709141P1	Spring for PTT Button	1
20	J709142P1	Washer	1
21	J707200P2	O-ring 4.0 mm.	1
22	J709147G2	Cover Asm.	1
23	J709140P1	Packing	1
24	M906065G1	Connector Asm.	1
24.1	J708868P1	Connector Screw	1
	J708868P2	Connector Screw (For SAS)	1
25	J709087P1	Button , Screw PTT.	1
26	J706854P1	Name Plate (STORNO)	1
27	J709136P1-P3	Label for CB4001-CB4003	1
28	J708300P106	Screw Pan Head 2.2x12.5 BZ	2
29	J706212P204	Screw Pan Head 2.0x9.5 SZ	8
30	K805738G1	Earphone Kit (optional)	1
30.1	J708634P2	Soldrig Termial	1
30.2	J708770P1	Socket, Lemo with nut	1
		Earphone Kit also contains the following items	
	J707718P1	Wire Strd. Brown 0.05M.	1
	J707718P7	Wire Strd. Violet 0.04M.	1
31	J708003P1	Grommet	1

CQP4000 UNIVERSAL

ACCESSORIES

CK4008

CK4008 is a leather carrying case designed for BU4001 application with cut-aways for the multi-connector used with the remote control.

CK4009

CK4009 is a leather carrying case intended for BU4002 application with cut-aways for the multi-connector used with the remote control.

19K805738G1

This part number designates a complete earphone socket kit (including mounting instructions).

19M906065G1

This is a remote multiconnector with an 11-cored shielded multicable of approx. 900 mm mounted.

K19J709305G1

This is a kit for changing an existing standard CQP4000 into a universal version. The kit includes modification instructions and new labels to be filled-in.