CQF9660

403 - 470 MHz

MODULE MANUAL

Storno

CQF9660
403 - 470 MHz
MODULE MANUAL

Service Coordination.

Date: 11.87.
Edition: 12.
Publication no: 8313.9960-11

RECEIVER

MULTIPLIER VERSION

CQF911x/CQF933x

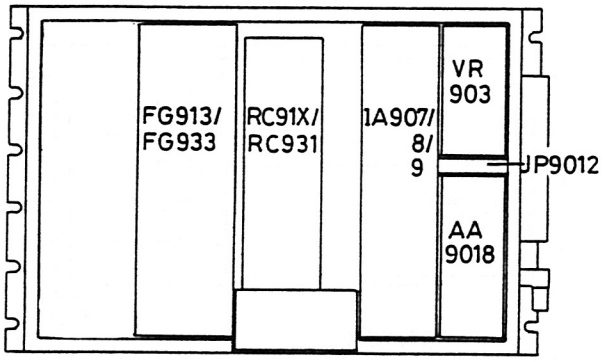

CQF955x/CQF966x

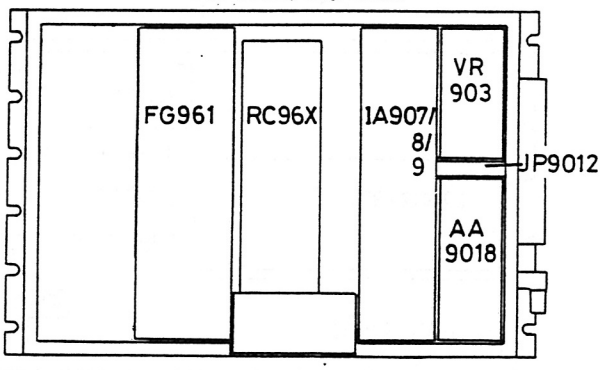

IF AMPLIFIER MODULE	CHANNEL SPACING
1A907/1A9012	25.0 kHz
1A908/1A9013	20.0 kHz
1A909/1A9014	12.5 kHz

RX CONVERTER MODULE	HIGH INTERMO-DULATION ATT.	HIGH SENSITIVITY (ONLY SIMPLEX)
RC911	X	
RC912		X
RC931	X	
RC953	X	
RC969	X	
RC962		X

SYNTHESIZER VERSION

CQF911x/CQF933x

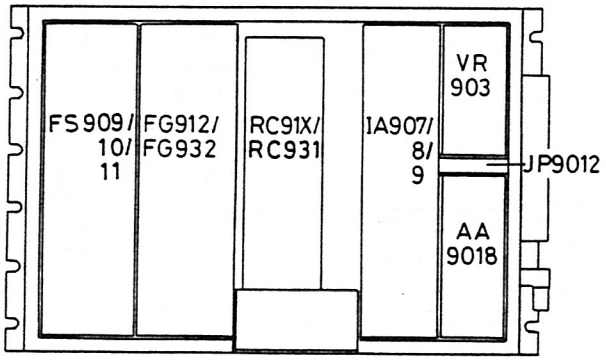

CQF955x/CQF966x

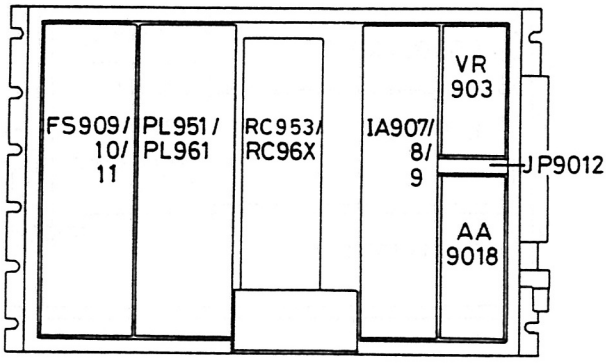

FREQ. SYNTH. MODULE	CHANNEL SPACING
FS909	12.5 kHz
FS9010	20.0 kHz
FS9011	25.0 kHz

TRANSMITTER

MULTIPLIER VERSION

CQF911x/CQF933x

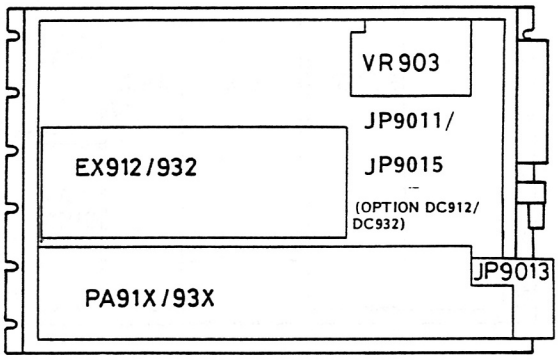

CQF955x/CQF966x

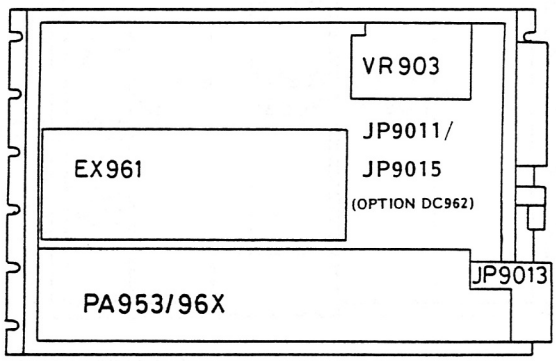

POWER AMP. MODULE	FREQUENCY RANGE	POWER OUTPUT SIMPLEX		POWER OUTPUT DUPLEX	
		without DC	with DC	without DC	with DC
PA911	138-174 MHz	10 W	10 W	6 W	6 W
PA913		25/40 W	25 W	18 W	18 W
PA931		10 W	10 W	6 W	6 W
PA932	66-88 MHz	25 W	25 W	18 W	18 W
PA933		40 W	25 W	25 W	18 W
PA953	350-410 MHz	40 W		25 W	
PA961		10 W	10 W	6 W	6 W
PA962	403-470 MHz	25 W	25 W	18 W	18 W
PA963		40 W	25 W	25 W	18 W

SYNTHESIZER VERSION

CQF911x/CQF933x

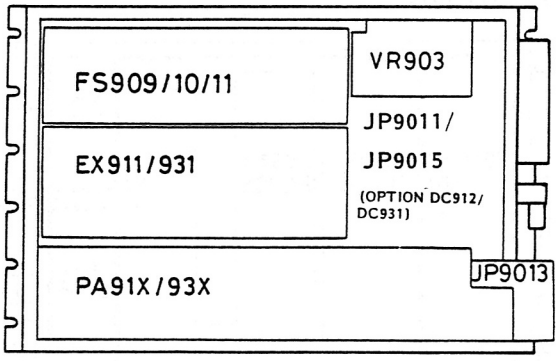

CQF955x/CQF966x

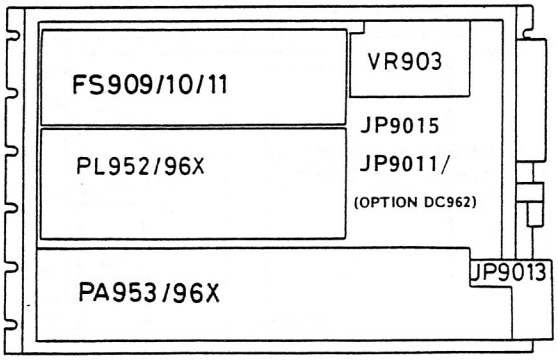

FREQ. SYNTH. MODULE	CHANNEL SPACING
FS909	12.5 kHz
FS9010	20.0 kHz
FS9011	25.0 kHz

AA901/902

AUDIO PROCESSOR MICROMODULE

The audio processor micromocule, AA901 is for use in 20/25 kHz equipment and AA902 is for use in 12.5 kHz equipment. It contains a pre-emphasis circuit, an audio amplifier, a limiter, a channel guard level control, and two roll-off filters. The circuitry shapes the audio properly to produce a phase-modutated carrier when used in conjunction with a frequency modulated oscillator, and limits the deviation to be within the values required by the authorities. An audio input is provided prior to the pre-emphasis and limiting circuits, and a channel guard tone input is provided after these circuits.

The microphone bias is provided via the TX Audio pin.

The audio micromodule which is a plug-in type utilizes a quad-op-amp to provide the necessary gain. The microphone signal is fed to the first amplifier through a passive pre-emphasis network to achieve a rising audio characteristic which is needed with the true FM oscillator. The oscillator thus produces a phase-modulated type of signal. Limiting diodes are used to ensure the second amplifier is not being over driven.

The second amplifier performs the actual audio limiting by using biased diodes in the feedback network. If the audio signals exceed a pre-set level these diodes will conduct and prevent any further increase of the output.

After the limiter, the signal passes a roll-off filter which prevents interferrence on ajacent channels by limiting the audio frequencies above 3 kHz. This filter is an active type and utilizes the other two op-amps contained in the IC.

Channel Guard signals are applied before the roll-off filter and their amplitude must be adjusted separately to produce the correct modulation.

TECHNICAL SPECIFICATIONS

Input voltage
9.0 V DC ±5%

Load impedance
2.2 Kohm AC/DC min.

Output voltage
6.6 V peak to peak max.
3.3 V peak to peak min.
for 1.0 V rms into mike input at 1000 Hz

Current consumption
4 mA max. (mike excluded)

Transmit audio response
6 dB octave relative to 1000 Hz
- AA901
mike input 300 Hz - 3000 Hz: +1, -3 dB
400 Hz - 2700 Hz: +1, -1,5 dB
- AA902
mike input 300 Hz - 2550 Hz: +1, -3 dB
3000 Hz : +1, -4,5 dB

Distorsion
less than 1% for 1000 Hz at threshold

Storno

Storno

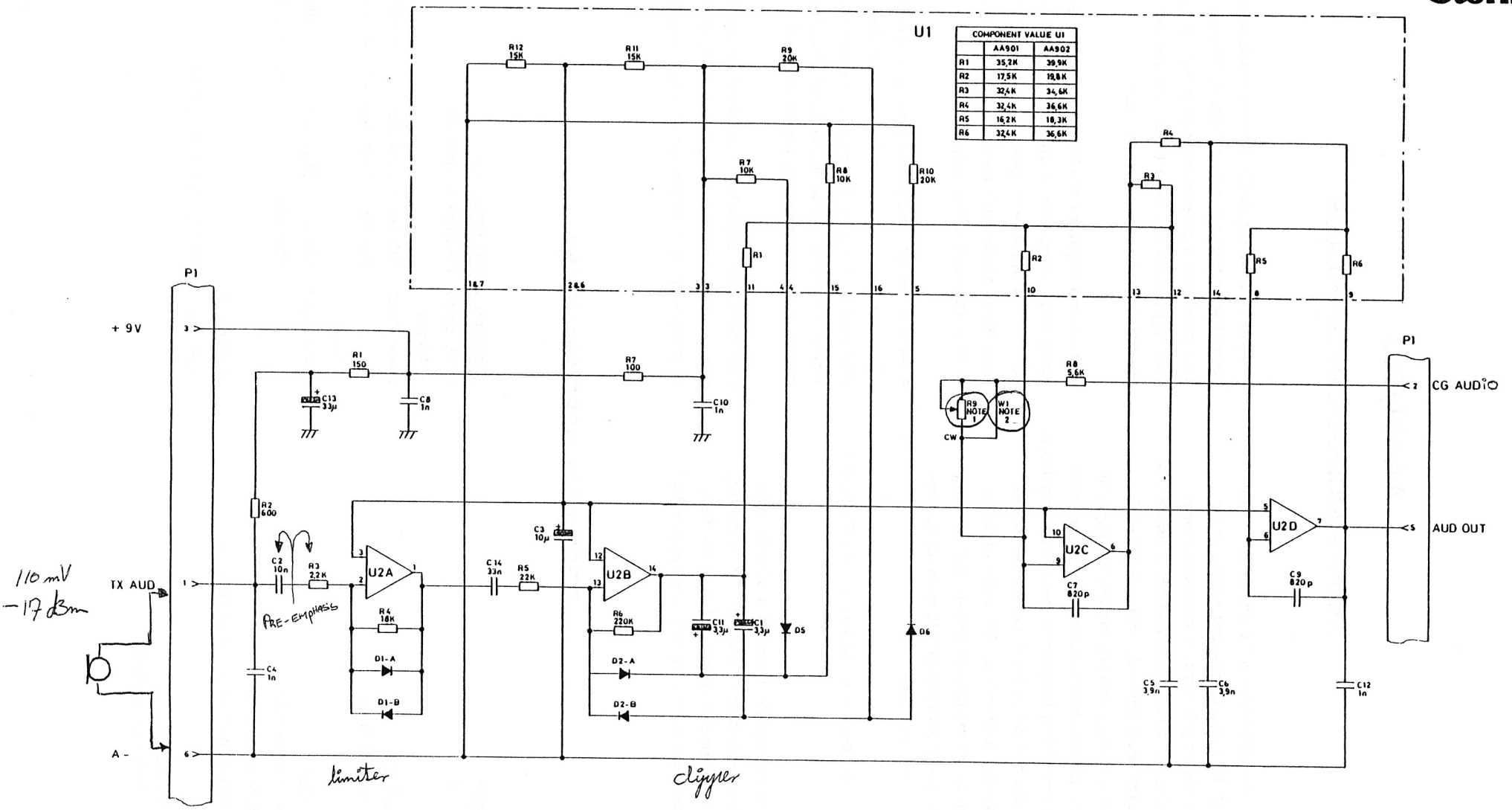

COMPONENT VALUE U1		
	AA901	AA902
R1	35,2K	39,9K
R2	17,5K	19,8K
R3	32,4K	34,6K
R4	32,4K	36,6K
R5	16,2K	18,3K
R6	32,4K	36,6K

NOTE 1: R9 PRESENT FOR CG LEVEL ADJUST (5K-500K)
NOTE 2: W1 PRESENT WITHOUT CG LEVEL ADJUST

AA901: 19D900072G1 WITH CG LEVEL ADJUST
AA902: 19D900072G2 WITH CG LEVEL ADJUST
AA901: 19D900072G3 WITHOUT CG LEVEL ADJUST
AA902 19D900072G4 WITHOUT CG LEVEL ADJUST

U_{20}: 3dB CUTOFF V/3,2 KHz

AUDIO PROCESSOR
AA901, AA902

D402.918/5

Storno

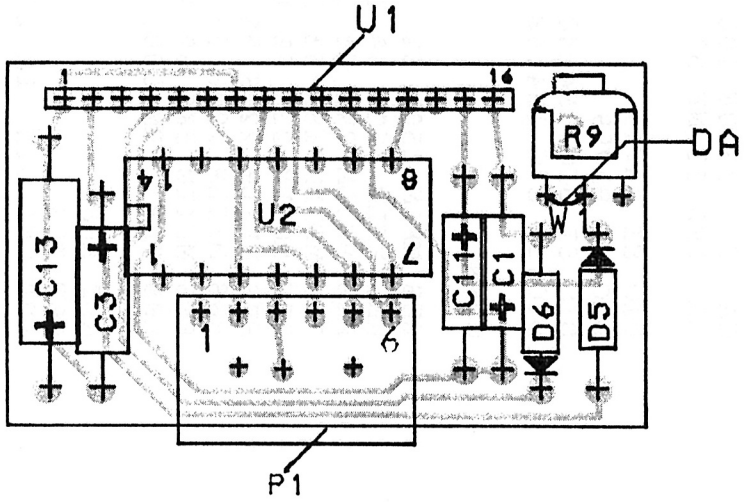

FRONTSIDE OF BOARD

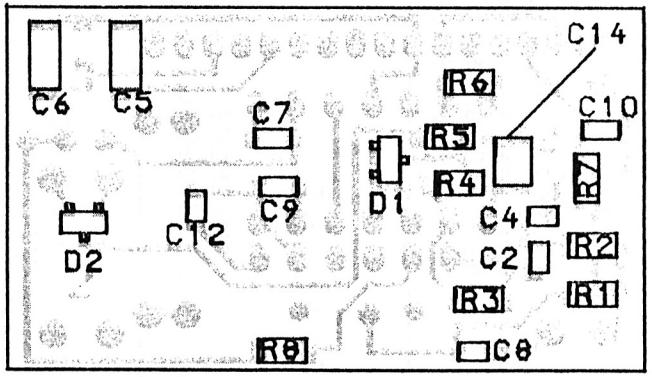

BACKSIDE OF BOARD

AUDIO PROCESSOR AA901-2

COMPONENT LAYOUT

D403. 786

ITEM NUMBER	DESCRIPTION
D900072G1	AA 901 , WITH CG LEVEL ADJUST
D900072G2	AA 902 , WITH CG LEVEL ADJUST
D900071G1	A1A : SUB ASM. CPNT BD F. AA 901
D900071G2	A1B : SUB ASM. CPNT BD F. AA 902

P A R T S L I S T :

CIRCUIT POSITION	COMPONENT ITEM NUMBER	COMPONENT DESCRIPTION	QUANTITY
	A701680P2	INS	1
	B800586P1	HOLDER MLD	1
	C850517P5	CAN	1
	C850688P1	RET	1
A1A :	D900071G1 :	SUB ASM AA901, CPNT BD :	
A1B :	D900071G2 :	SUB ASM AA902, CPNT BD :	
C01	B800650P15	CAP TA 3.3 UF 20% 10V	1
C02	A700011P8	CAP CER CL2 10N 20% 50V	1
C03	B800650P16	CAP TA 10 UF 20% 10V	1
C04	A700058P5	CAP CER 1NF 50V	1
C05	A700010P25	CAP CER NPO 3N9 5% 50V	1
C06	A700010P25	CAP CER NPO 3N9 5% 50V	1
C07	A700010P9	CAP CER 820PF 50V	1
C08	A700058P5	CAP CER 1NF 50V	1
C09	A700010P9	CAP CER 820PF 50V	1
C10	A700010P11	CAP CER 1NF 50V	1
C11	B800650P15	CAP TA 3.3 UF 20% 10V	1
C12	A700058P5	CAP CER 1NF 50V	1
C13	B800650P17	CAP TA 33 UF 20% 10V	1
C14	A700058P120	CAP CER 33 NF 5% U4	1
D01	A700053P1	DIO SI BAV99	1
D02	A700053P1	DIO SI BAV99	1
D05	A700028P1	DIO SI SIG 1N4148	1
D06	A700028P1	DIO SI SIG 1N4148	1
P01	A701486P5	CONN	1
R01	J707685P151	RES MFLM 150R 5% 1/8W	1
R02	J707685P561	RES MFLM 560R 5% 1/8W	1
R03	J707385P222	RES MFILM 2K2 5% 1/8W	1
R04	J707385P183	RES MFILM 18K 5% 1/8W	1
R05	J707385P223	RES MFILM 22K 5% 1/8W	1
R06	J707385P224	RES MFILM 220K 5% 1/8W	1
R07	J707385P101	RES MFILM 100R 5% 1/8W	1
R08	J707385P562	RES MFILM 5K6 5% 1/8W	1
R09	A701275P1	RES VAR CERM 500K 0.5W	1
U1A	D900290G1	NET RES	1 (F.AA9
U1B	D900290G2	NET RES	1 (F.AA9
U2	A701789P3	INT CKT LIN LM224	1

Storno

AA9018

AUDIO AMPLIFIER

The AA9018 is a audio line amplifier and squelch circuit for use in base station receivers. The amplifier is built on a printed wiring board with a connector for the receiver mother board. The circuit consists of a gated audio amplifier and a squelch micromodule type SQ903.

The amplifier circuit has two gated outputs, a non-deemphased output (B) and a transformer coupled line output (A), and a non-gated non-deemphased output (C).

The AF signal from the discriminator is applied to both the squelch input and the amplifier input. A low pass filter removes noise signals and the signal is then deemphased and fed to the line amplifier. Two gate transistors are used to control the signal to outputs A and B. The output is disabled when the gate terminal is pulled to chassis.
The AF line level is adjustable with potentiometer R8.

SPECIFICATIONS

Supply voltage
+9 V

Current drain
less than 30 mA

AF input impedance
22 Kohm (1000 Hz)

AF input level
300 mV r.m.s.

AF OUTPUT A; DEEMPHASED

Output level
1.1 V r.m.s. adjustable

Output impedance
600 ohm

Load impedance
600 ohm

Frequency characteristic
-6 dB/octave +1/-3 dB 300 - 3000 Hz
-18 dB/octave above 3000 Hz
-6 dB/octave +1/-1.5 dB 400 - 2700 Hz

AF OUTPUT B; NON-DEEMPHASED

Output level
300 mV r.m.s.

Output impedance
approx. 0 ohm

Load impedance
min. 2 Kohm

Frequency characteristic
Flat +1/-3 dB 50 - 3000 Hz
-18 dB/octave above 3000 Hz

AF OUTPUT C; NON-DEEMPHASED

Output level
300 mV r.m.s.

Output impedance
approx. 0 ohm

Load impedance
min. 2 Kohm

Frequency characteristic
Flat +1/-3 dB 50 - 150 kHz

Dimensions
38 x 89 mm

Temperature range
$-40^{o}C$ to $+85^{o}C$

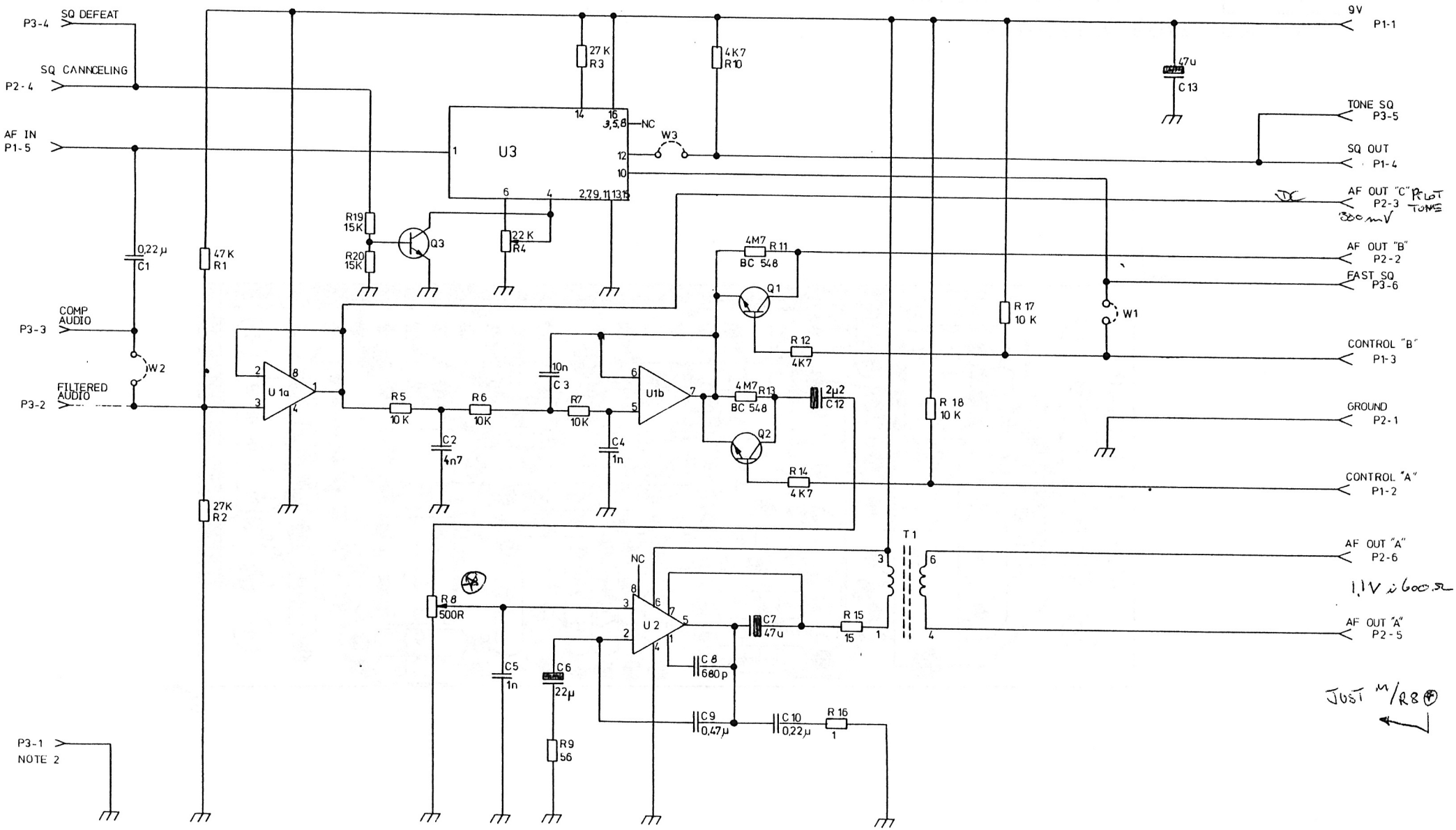

NOTE: 2
P3 IS USED TO INTERFACE CHANNEL GUARD EQUIPMENT

AUDIO AMPLIFIER AA9018

CODE NO. L855583G1 REV.B D403.859/4

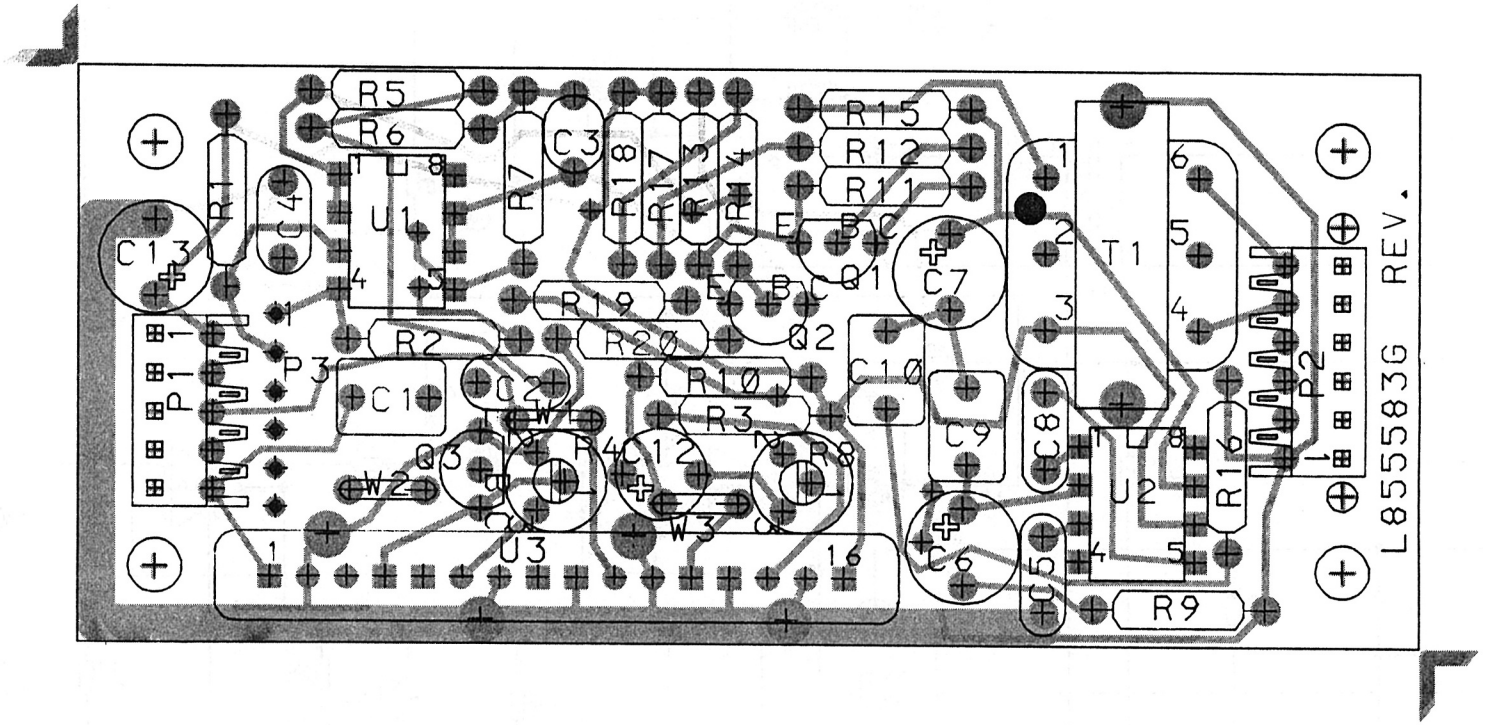

COMPONENT BOARD FOR AA9018

CODE NO. L855583G1 REV.1 D403.860/4

DATE: 10/30/1987

Pos	Code No	Description	Qt
C001	J707412P11	CAP PYES 220N 10%	1
C002	A700234P5	CAP PYES 4N7 10%	1
C003	A700234P7	CAP PYES 10N 10%	1
C004	A700234P1	CAP PYES 1N0 10%	1
C005	A700233P7	CAP CER CL2 1N 20%	1
C006	J707444P7	CAP TA SOL 22U 10V	1
C007	J707444P17	CAP TA SOL 47U 10V	1
C008	A700233P6	CAP CER CL2 680P 20%	1
C009	J707412P13	CAP PYES 470N 10%	1
C010	J707412P11	CAP PYES 220N 10%	1
C012	A701534P5	CAP TA SOL 2U2 35V	1
C013	J707444P17	CAP TA SOL 47U 10V	1
P001	A700041P4	CONN PWB FEM05-CKT	1
P002	A700041P5	CONN PWB FEM06-CKT	1
P003	J708925P1	CONN PIN L-9 70mm	6
Q000	J707511P1	TSTR NPN SI BC 548A/B	1
Q001	J707511P2	TSTR NPN SI BC 548C	1
Q002	J707511P2	TSTR NPN SI BC 548C	1
Q003	J707511P2	TSTR NPN SI BC 548C	1
R000	J706035P39	RES DEPC 0.1W 15K 5%	1
R001	A700019P57	RES DEPC 1/4W 47K 5%	1
R002	A702110P54	RES DEPC 1/4W 27K 5%	1
R003	A700019P54	RES DEPC 1/4W 27K 5%	1
R004	A700016P5	RES VAR CERM 20K 10%	1
R005	A700019P49	RES DEPC 1/4W 10K 5%	1
R006	A700019P49	RES DEPC 1/4W 10K 5%	1
R007	A700019P49	RES DEPC 1/4W 10K 5%	1
R008	A700016P9	RES VAR CERM 500R 10%	1
R009	A700019P22	RES DEPC 1/4W 56R 5%	1
R010	A700019P45	RES DEPC 1/4W 4K7 5%	1
R011	A700019P81	RES DEPC 1/4W 4M7 10%	1
R012	A700019P45	RES DEPC 1/4W 4K7 5%	1
R013	A700019P81	RES DEPC 1/4W 4M7 10%	1
R014	A700019P45	RES DEPC 1/4W 4K7 5%	1
R015	A700019P15	RES DEPC 1/4W 15R 5%	1
R016	A700019P1	RES DEPC 1/4W 1R0 5%	1

Pos	Code No	Description	Qt
R017	A700019P49	RES DEPC 1/4W 10K 5%	1
R018	A700019P49	RES DEPC 1/4W 10K 5%	1
R019	J700019P51	RES DEPC 0.1W 15K 5%	1
R020	J700019P51	RES DEPC 0.1W 15K 5%	1
T001	J708384P1	TRANSFORMER AUDIO	1
U001	A700086P2	IC LIN OP-AMP 1458	1
U002	J707451P1	IC LIN AF-AMP 820	1
U003	M905752G1	INT CKT ASM SQ 903	1
W001	A702110P1	RES 1R0	1
W002	A702110P1	RES 1R0	1
W003	A702110P1	RES 1R0	1
	L855584P1R1	BD PW	1

Storno

Storno

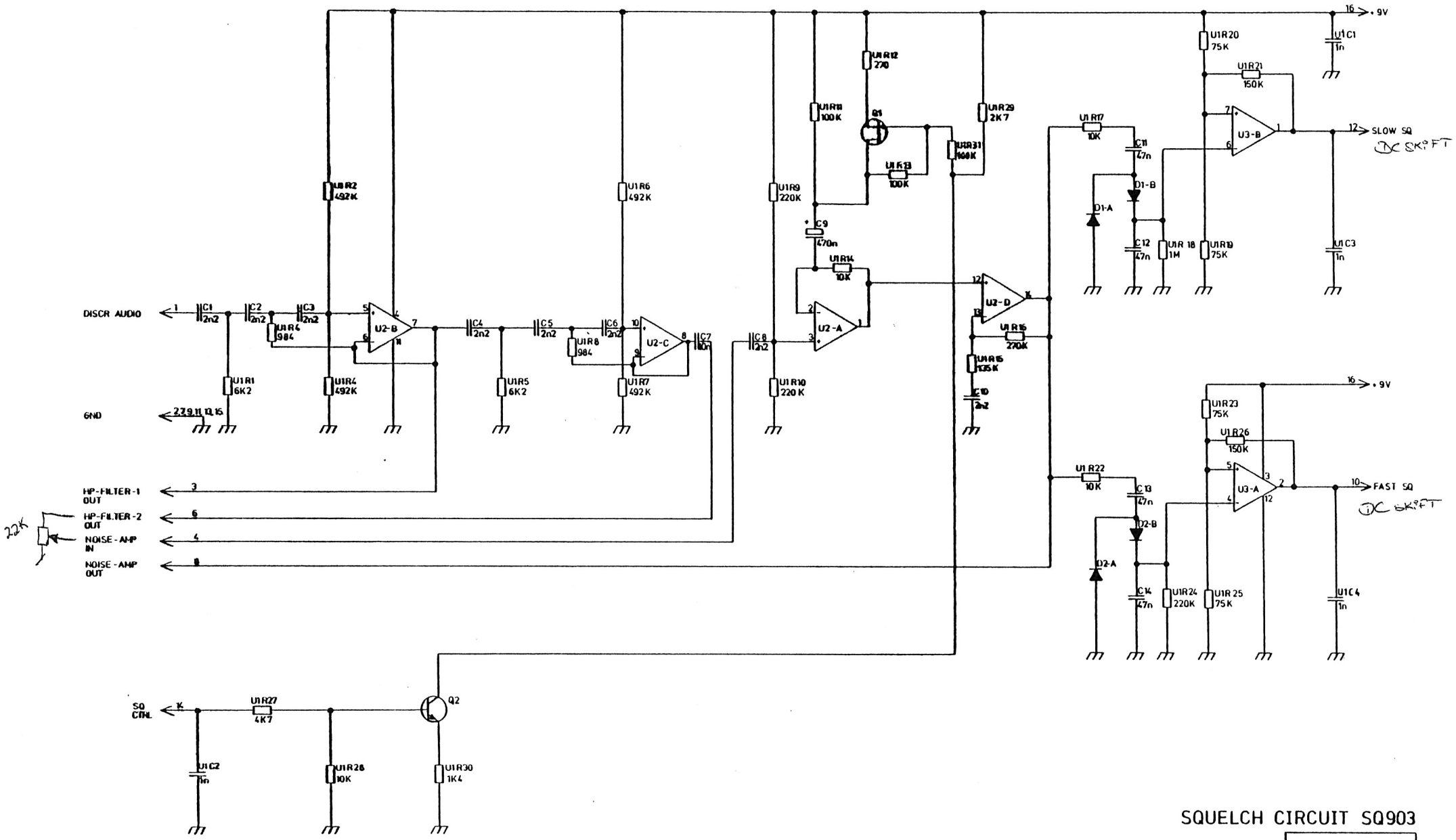

SQUELCH CIRCUIT SQ903

CODE NO. M905752G1 | D403.674

AS9x2

ANTENNA SWITCH

AS9x2 is an electric antenna switch used in simplex CQF9000 base stations.

The module is used in radios up to 40 Watt and connects the antenna to either the receiver input or the transmitter output.

CIRCUIT DESCRIPTION

An electronic switch circuit forward or reverse biases the different diodes so that the RF-circuit either directs the signal from the antenna to the receiver intput or from the transmitter output to the antenna.

D1, D2 and D3 are low-harmonic PIN-diodes where D3 is placed in the receiver branch to increase the isolation from transmitter to receiver when the switch is in transmit mode.

In receive mode L3-C3-C4 constitutes a lowpass filter due to D1 and D2 being reverse biased and D3 forward biased.
The received signal is then able to pass from the antenna through C5-L3-C7-D3 and C8 to the receiver input.

In transmit mode D1 and D2 are forward biased and D3 reverse biased. D2 short-circuits capacitor C4 and L3-C3 constitutes a parallel resonance circuit with high impedance to the RF signal. Capacitor C11 is in parallel with C3 and the transmitter signal is able to pass through D1 and C5 to the antenna.

The switch circuit comprises a current limiter (Q3-R10) to prevent damage to the antenna switch if the center conductor of the transmitter cable is accidentally shorted to ground.

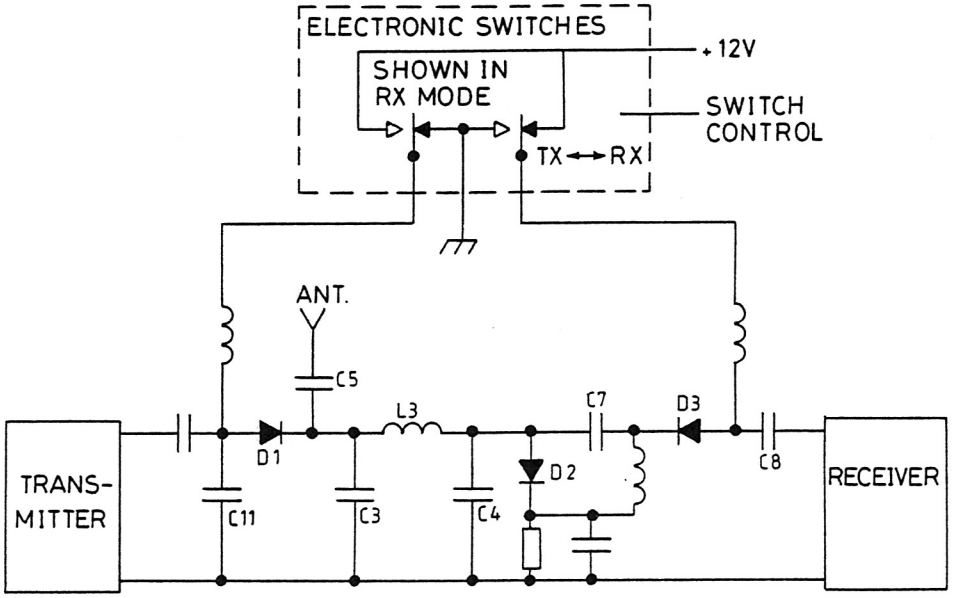

FUNCTIONAL DIAGRAM AS9X2
D403.949

SPECIFICATIONS

AS912 138 MHz to 174 MHz
AS932 66 MHz to 88 MHz
AS962 360 MHz to 410 MHz and 403 MHz to 470 MHz

Maximum transmitted power
40 Watt

Antenna impedance
Max. 50 ohm nominal
VSWR: 1.4: 1

TX (PA output) impedance
Max. 50 ohm nominal
VSWR: 1.4: 1

RX (Receiver input) impedance
Max. 50 ohm nominal
VSWR: 1.3: 1

Power Supply (A+)
9.0 V to 16.6 V

Attack time (Switching of TX to antenna)
<10 uS

Release time (Switching of RX to antenna)
>5 mS

TX and RX connected to antenna

	TX	RX
Insertion loss (typical)	0.6 dB	0.7 dB
Isolation	>35 dB	>20 dB
Intermodulation Att.		>95 dB
Harmonic distortion	<-90 dB	
Current consumption	<90 mA	>25 mA
	(A+= 13.6 V)	

Dimensions
Length 71 mm
Width 56 mm

Temperature range
-40°C to +85°C

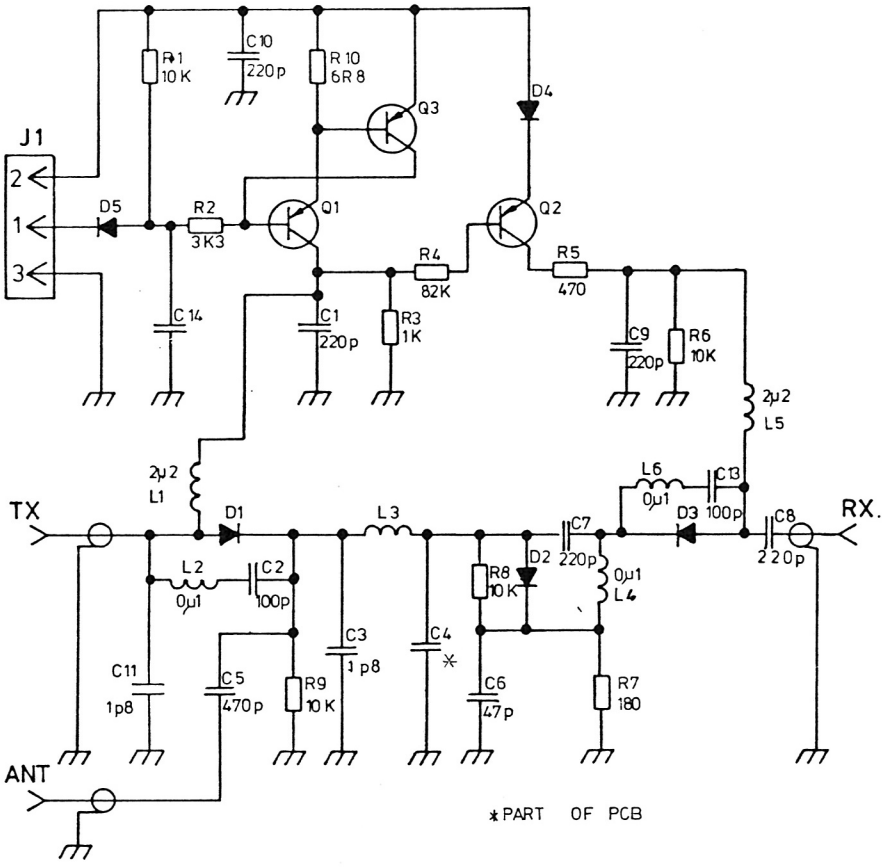

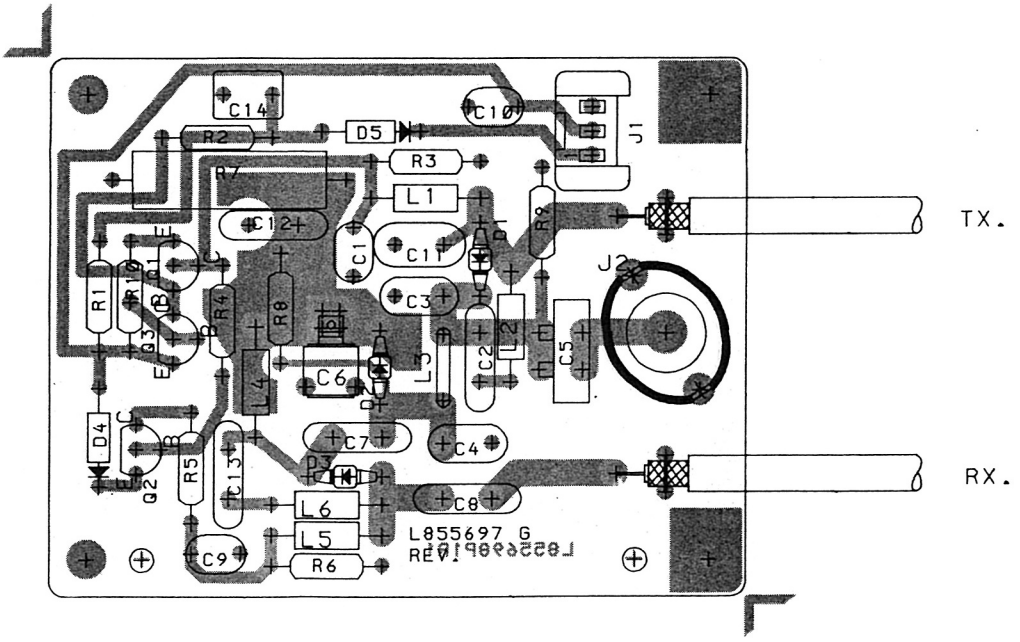

ANTENNA SWITCH AS962

CODE NO. L855697G3 | D403.871

ITEM NUMBER	DESCRIPTION
L855697G3	AS 962 , CPNT BD PW

P A R T S L I S T :

CIRCUIT POSITION	COMPONENT ITEM NUMBER	COMPONENT DESCRIPTION	QUANTITY
C001	A700233P3	CAP CER CL2 220P 20% 50V	1
C002	A700235P29	CAP CER N750 220P 5% 50V	1
C003	J706079P4	CAP CER NPO 1P8 - 25P 500V	1
C005	A700015P45	CAP PTFE 470P 5% 250V	1
C006	A700006P26	CAP MICA 47P 5% 100V	1
C007	A700233P3	CAP CER CL2 220P 20% 50V	1
C008	A700233P3	CAP CER CL2 220P 20% 50V	1
C009	A700233P3	CAP CER CL2 220P 20% 50V	1
C010	A700233P3	CAP CER CL2 220P 20% 50V	1
C011	J706079P4	CAP CER NPO 1P8 - 25P 500V	1
C013	A700233P1	CAP CER CL2 100P 20% 50V	1
C014	J707412P13	CAP PYES 470N 10% 63V	1
D001	J706892P1	DIO SI PIN UM 9401	1
D002	J706892P1	DIO SI PIN UM 9401	1
D003	J706892P1	DIO SI PIN UM 9401	1
D004	A700028P1	DIO SI SIG 1N4148	1
D005	A700028P1	DIO SI SIG 1N4148	1
J001	J708068P3	CONN 3 PIN	1
J002	A701097G1	CONNECTOR	1
L001	A700024P17	COIL FIX 2,2UH 10%	1
L002	A700024P1	COIL FIX 100NH 10%	1
L003	J707777P1	COIL AIR	1
L004	A700024P1	COIL FIX 100NH 10%	1
L005	A700024P17	COIL FIX 2,2UH 10%	1
L006	A700024P1	COIL FIX 100NH 10%	1
Q001	J707435P1	TSTR PNP SI BC 369	1
Q002	J707674P1	TSTR PNP SI BC 558A/B	1
Q003	J707674P1	TSTR PNP SI BC 558A/B	1
R001	A700019P49	RES DEPC 10K 5% 1/4W	1
R002	A700019P43	RES DEPC 3K3 5% 1/4W	1
R003	A700019P37	RES DEPC 1K0 5% 1/4W	1
R004	A700019P60	RES DEPC 82K 5% 1/4W	1
R005	A700019P33	RES DEPC 470R 5% 1/4W	1
R006	A700019P49	RES DEPC 10K 5% 1/4W	1
R007	J707134P1	RES DEPOS 180 OHM 3W	1
R008	A700019P49	RES DEPC 10K 5% 1/4W	1
R009	A700019P49	RES DEPC 10K 5% 1/4W	1
R010	A700019P11	RES DEPC 6R8 5% 1/4W	1
0002	L------P1R1	BD PW., REVISION:1	(1)

CIRCUIT POSITION	COMPONENT ITEM NUMBER	COMPONENT DESCRIPTION	QUANTITY
0010	A700133P22	WIRE, 0.800 DIA	0.10 G
0011	K805618G1	CABLE ASM	1 (SEE BELOW:
0012	K805618G2	CABLE ASM	1 (SEE BELOW
0011 :	K805618G1 :	CABLE ASM :	
0002	J706049P3	CABLE RF COAX 50R WRP PTF	0,322M
0003	J707750P1	CONN COAX BNC-PLUG UG 88	1
0012 :	K805618G2 :	CABLE ASM :	
0002	J706049P3	CABLE RF COAX 50R WRP PTF	0,142M
0003	J707750P1	CONN COAX BNC-PLUG UG 88	1

Storno

BF961

BRANCHING FILTER

The duplex filter BF961 is used in a duplex radio to avoid interference between the receiver and the transmitter when they are connected to the same antenna. The filter is tunable within the frequency band 403-470 MHz.
The spacing between RX and TX frequencies is 4.5-15 MHz and the design allows the TX frequency to be placed above or below the RX frequency without changing terminals.
The filter contains up to 8 helical resonators, up to 5 in the TX branch and up to 3 in the RX branch.
The number of resonators used for a certain application will depend on the spacing between RX and TX frequencies.

The duplex filter is built as a double notch filter:
In the RX section there is a notch on the TX frequency to prevent the transmitter signal from entering the receiver.
In the TX section there is a notch on the RX frequency to prevent the TX sideband noise from entering the receiver.

The two sections are coupled to the antenna through two quarter-wave lines, which isolate the two sections from each other.

The principle is the same in all the resonators. In each resonator there is a helical coil Lp which is tuned to the desired parallel resonant frequency with a slug symbolized with TS. Near the bottom of the helical coil there is a tap which is connected to a printed coil Ls on a printed wiring board.
Together with the helical Lp, Ls and the variable capacitor Cvar provides the series resonant frequency on both sides of the parallel resonances.
The pi-network Cpi + Lpi which gives the connector to the adjacent resonators is working as a quarter-wave line and is made with printed coils and discrete capacitor on the printed wiring board.

This design with one common printed board for all 8 resonators gives a filter with very few components.

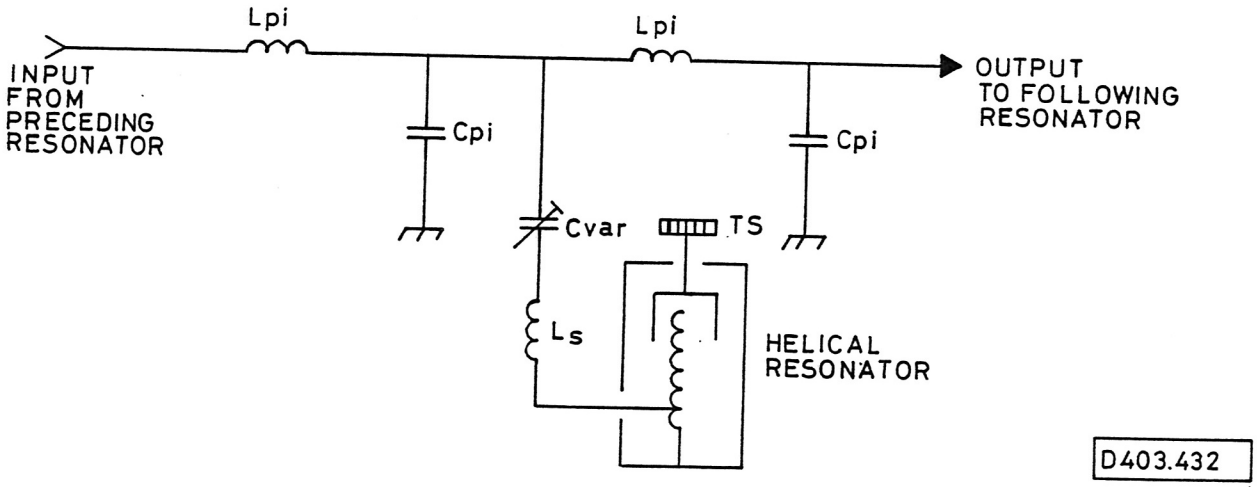

TECHNICAL SPECIFICATIONS

Frequency range (tunable)
403-470 MHz

Frequency separation
±4.5-15 MHz

Nominal impedance
50 ohm, input/output

Power input
<60 W

VSWR
Max. 1.5

Temperature range
-40°C to +85°C (ambient)

Inserting loss

Frequency separation	Bandwith	at +25°C
TX		
4.5-8 MHz	0.8 MHz	<1.5 dB
8-15 MHz	2.0 MHz	<1.3 dB
RX		
4.5-8 MHz	0.8 MHz	<1.2 dB
8-15 MHz	2.0 MHz	<1.0 dB

Freq. Attenuation	Bandwith	at +25°C
TX in RX branch		
4.5-8 MHz	0.8 MHz	>30 dB
8-15 MHz	2.0 MHz	>30 dB
RX in TX branch		
4.5-8 MHz	0.8 MHz	>70 dB
8-15 MHz	2.0 MHz	>70 dB

Storno

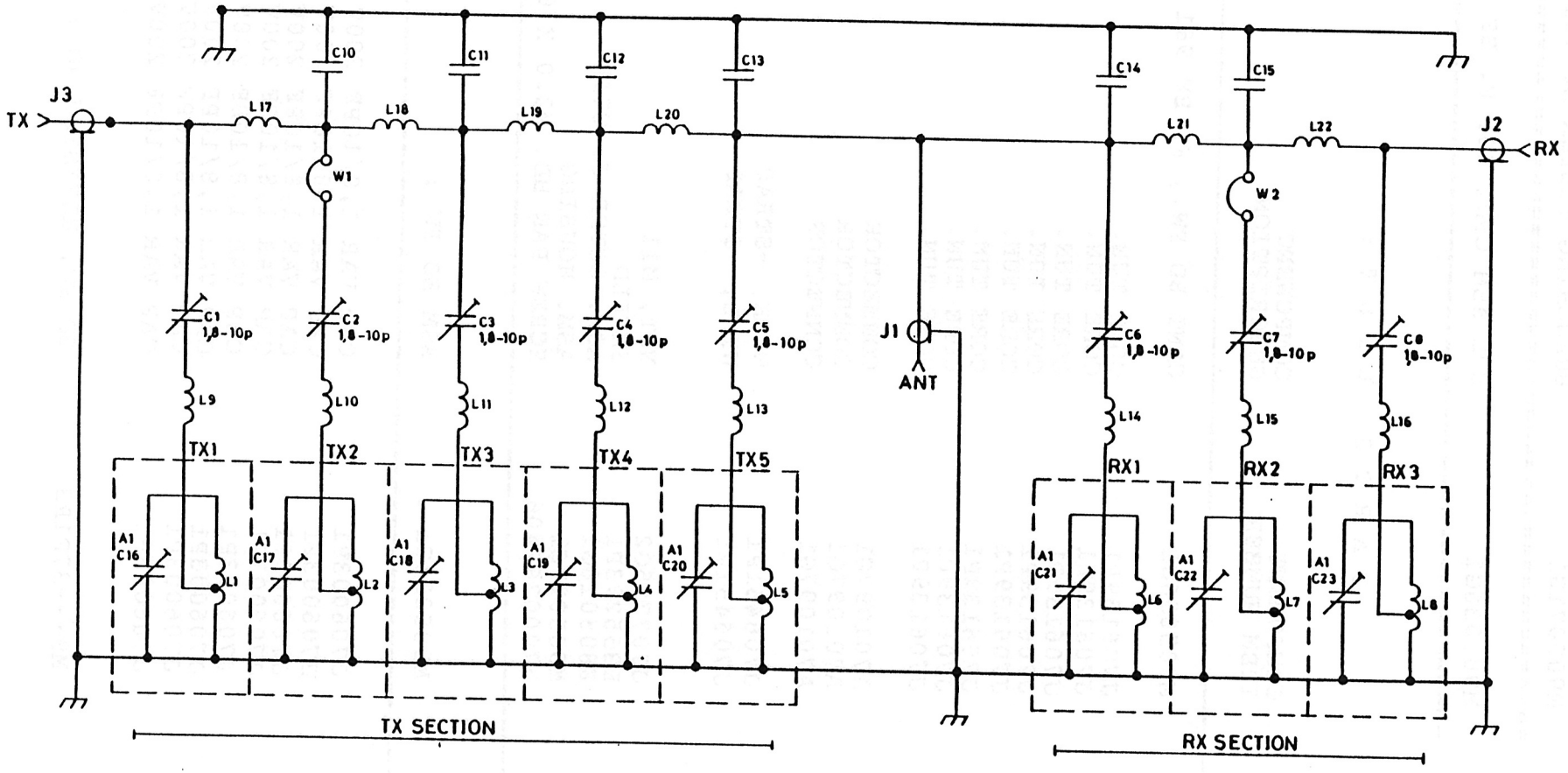

C10-C15 : PART OF PWB
L9 - L22 : PART OF PWB
A1 C16-C23 : CORE TUNING

W1+W2 INSERTED FOR DUPLEX SPACING 4.5 - 8.0 MHz

BRANCHING FILTER BF 961

REV B CODE NO M905071G1 D403.181/6

ITEM NUMBER DESCRIPTION

M905071G1 BRANCHING FILTER BF 961, 420 - 470 MH?

M905036G1 SUB ASM CPNT BD. F. BF 961

P A R T S L I S T :

CIRCUIT POSITION	COMPONENT ITEM NUMBER	COMPONENT DESCRIPTION	QUANTITY TOTAL
A01	M905036G1	CPNT BD PW., F. BF 961	1 (SEE BELOW:
C16	J706139P1	CORE TUN.	1
C17	J706139P1	CORE TUN.	1
C18	J706139P1	CORE TUN.	1
C19	J706139P1	CORE TUN.	1
C20	J706139P1	CORE TUN.	1
C21	J706139P1	CORE TUN.	1
C22	J706139P1	CORE TUN.	1
C23	J706139P1	CORE TUN.	1
J01	A701097G1	CONNECTOR	1
J02	A701097G1	CONNECTOR	1
J03	A701097G1	CONNECTOR	1
W01	J706451P1	WIRE, -STRAP	1
W02	J706451P1	WIRE, -STRAP	1
002	J707755G2	NUT, M11	8
004	L855293P1	SHIELD	1
005	K805018G1	ASM. COVER F. COIL	1
006	M905027G1	ASM. HOUSING	1
000	A700036P406	SCREW PAN HD. M3.0 X 6.0MM	44

A01 : M905036G1 : ASM BD PW :

C01	J706003P1	CAP VAR 1,8/10PF 200V	1
C02	J706003P1	CAP VAR 1,8/10PF 200V	1
C03	J706003P1	CAP VAR 1,8/10PF 200V	1
C04	J706003P1	CAP VAR 1,8/10PF 200V	1
C05	J706003P1	CAP VAR 1,8/10PF 200V	1
C06	J706003P1	CAP VAR 1,8/10PF 200V	1
C07	J706003P1	CAP VAR 1,8/10PF 200V	1
C08	J706003P1	CAP VAR 1,8/10PF 200V	1
0	M9---37P1R3	BD PW, REVISION NO.: 3	1

Storno

DC9x2

DIRECTIONAL COUPLER

DESCRIPTION

DC9x2 is used in CQF9xxx to avoid signal inter-modulation. The module is mounted in the TX-tray behind the branching filter.

Each frequency band has its particular DC module.

- DC912 VHF band 138 - 174 MHz
- DC932 VHF band 66 - 88 MHz
- DC962 UHF band 403 - 470 MHz

DC9x2 consists of a circulator, a resistor, 6 variable capacitors for matching the circulator to the terminals and a filter for damping harmonic products.

SPECIFICATIONS

Input impedance
50 ohm

Output impedance
50 ohm

Max. power handling
25 W

Temperature
from -40°C to +85°C

	DC912	DC932	DC962
Bandwith	6 MHz	2 MHz	15 MHz
Insertion loss	≤0.7 dB	≤1.0 dB	≤0.6 dB
Isolation, room temperature	≥20 dB	≥20 dB	≥20 dB
Isolation, extreme temperature	≥16 dB	≥12 dB	≥16 dB

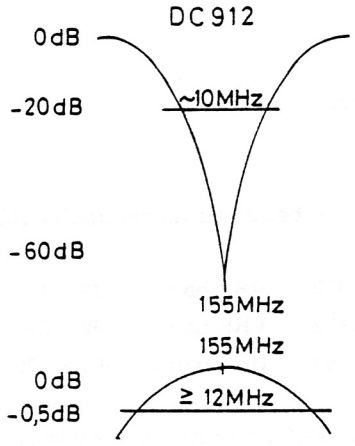

TYPICAL FILTER CURVE FROM ANTENNA TO TRANSMITTER

TYPICAL FILTER CURVE FROM TRANSMITTER TO ANTENNA

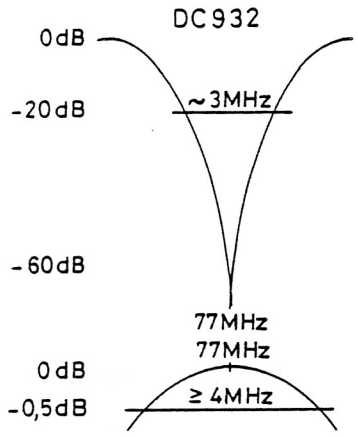

TYPICAL FILTER CURVE FROM ANTENNA TO TRANSMITTER

TYPICAL FILTER CURVE FROM TRANSMITTER TO ANTENNA

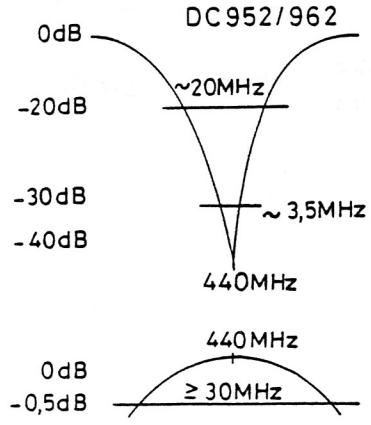

TYPICAL FILTER CURVE FROM ANTENNA TO TRANSMITTER

TYPICAL FILTER CURVE FROM TRANSMITTER TO ANTENNA

FILTER CURVE DC912/932/952/962

D404.206

Storno

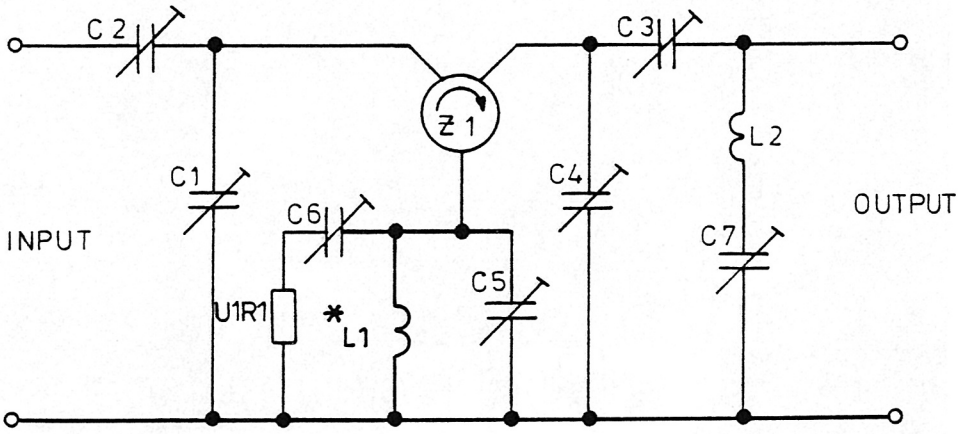

* PART OF PWB

MODULE CODE NO.	MOUNTED BOARD CODE NO.	
L855802G4 L855802G1	L855259G2 L855259G1	DC95x DC96x

Storno

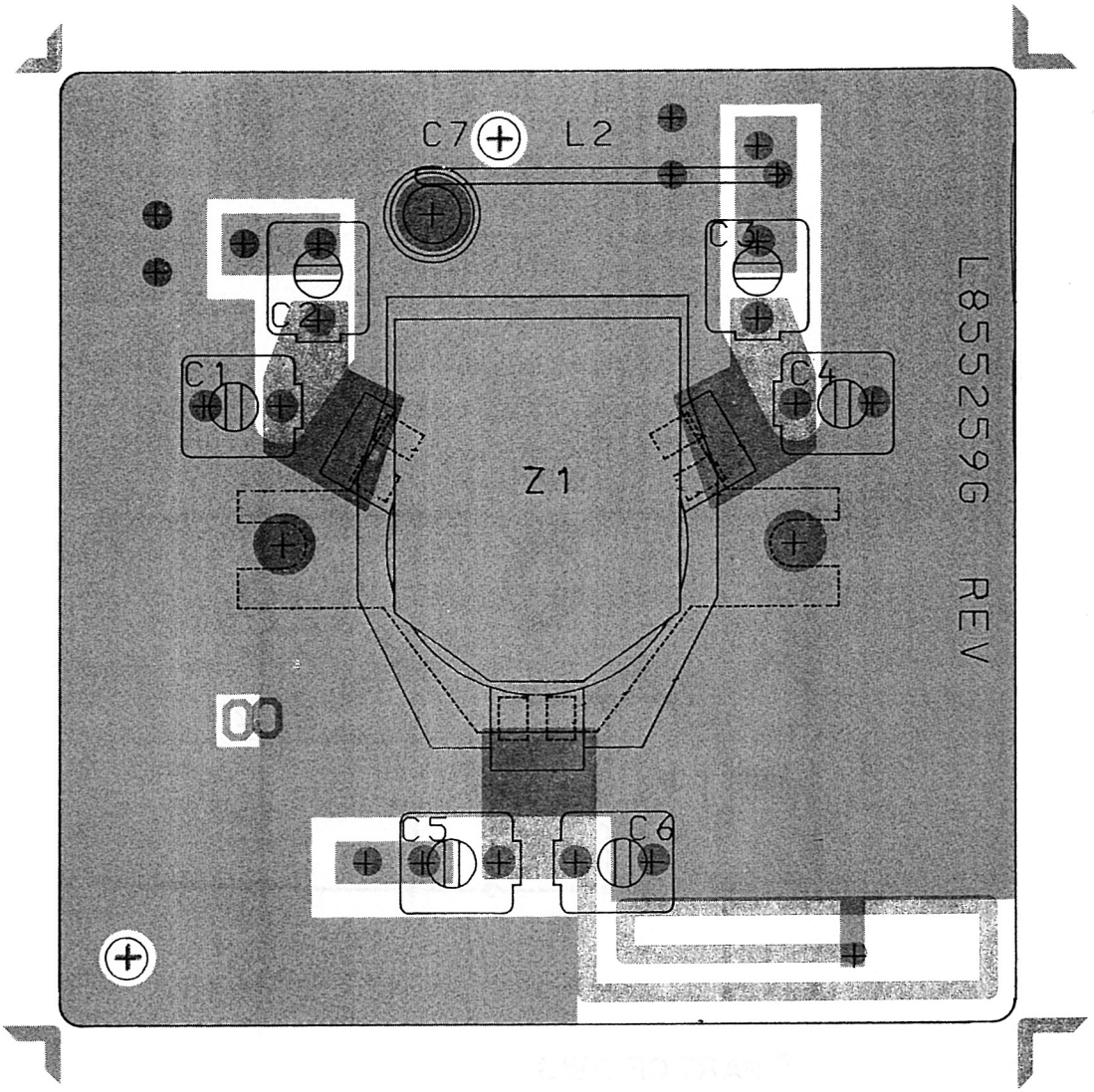

MODULE CODE NO.	MOUNTED BOARD CODE NO.	
L855802G4 L855802G1	L855259G2 L855259G1	DC95x DC96x

DIRECTIONAL COUPLER DC951/952/961/962
COMPONENT LAYOUT

D404.215

ITEM NUMBER DESCRIPTION

L855802G1 DC 962 , ASM. DIR CPLR, F. F966X

P A R T S L I S T :

CIRCUIT POSITION	COMPONENT ITEM NUMBER	COMPONENT DESCRIPTION	QUANTITY	
A001	L855259G1	COMP BD PW., F. DC961/-962	1	(SEE BELOW)
W001	J708816P2	CABLE ASM., RF-, COAX	1	
W002	J708947P1	CABLE ASM., RF-	1	
0002	K805282G1	HEAT SINK ASM.	1	(SEE BELOW)

A001 : L855259G1 : COMP BD PW., F. DC961/-962 :

A001	J707237P3	CIRCULATOR, 40W , 230-470	1
C001	J706003P3	CAP VAR FILM 1.2/3.5P 200V	1
C002	J706003P1	CAP VAR FILM 1.8/10P 200V	1
C003	J706003P2	CAP VAR FILM 2.0/18P 200V	1
C004	J706003P3	CAP VAR FILM 1.2/3.5P 200V	1
C005	J706003P1	CAP VAR FILM 1.8/10P 200V	1
C006	J706003P1	CAP VAR FILM 1.8/10P 200V	1
C007	J707266P1	CAP VAR CER 0.6/3.5P 160V	1
L002	J707254P1	COIL, RF- ,	1
0002	L8---60P1R0	BD PW., REVISION NO.: 0	1

0002 : K805282G1 : ASM., HEAT SINK- :

U01	J707159G1	INT CKT ASM	1
002	K805307G1	PROFILE, EXTRUDED-	1
003	J707137P1	SPRING	1
004	A700036P304	SCREW PAN HD M-2.5 X 4.0	2

Storno

EX961

TRANSMITTER EXCITER

EX961 is used in the 900 multiplier radios and in the frequency range 403-470 MHz.

EX961 supplies the PA with a modulated RF signal. The frequency range is 403-470 MHz and the maximum number of channel frequencies is 2.

Each channel frequency is generated in a plug-in crystal oscillator (XO). Maximum frequency spacing of the 2 channels is 4.5 MHz. If only one XO is used, it shall be placed as XO no. 1 and it will be on continuously. If two or three XO's are used, W1 is disconnected and the channel frequency is selected from P3.

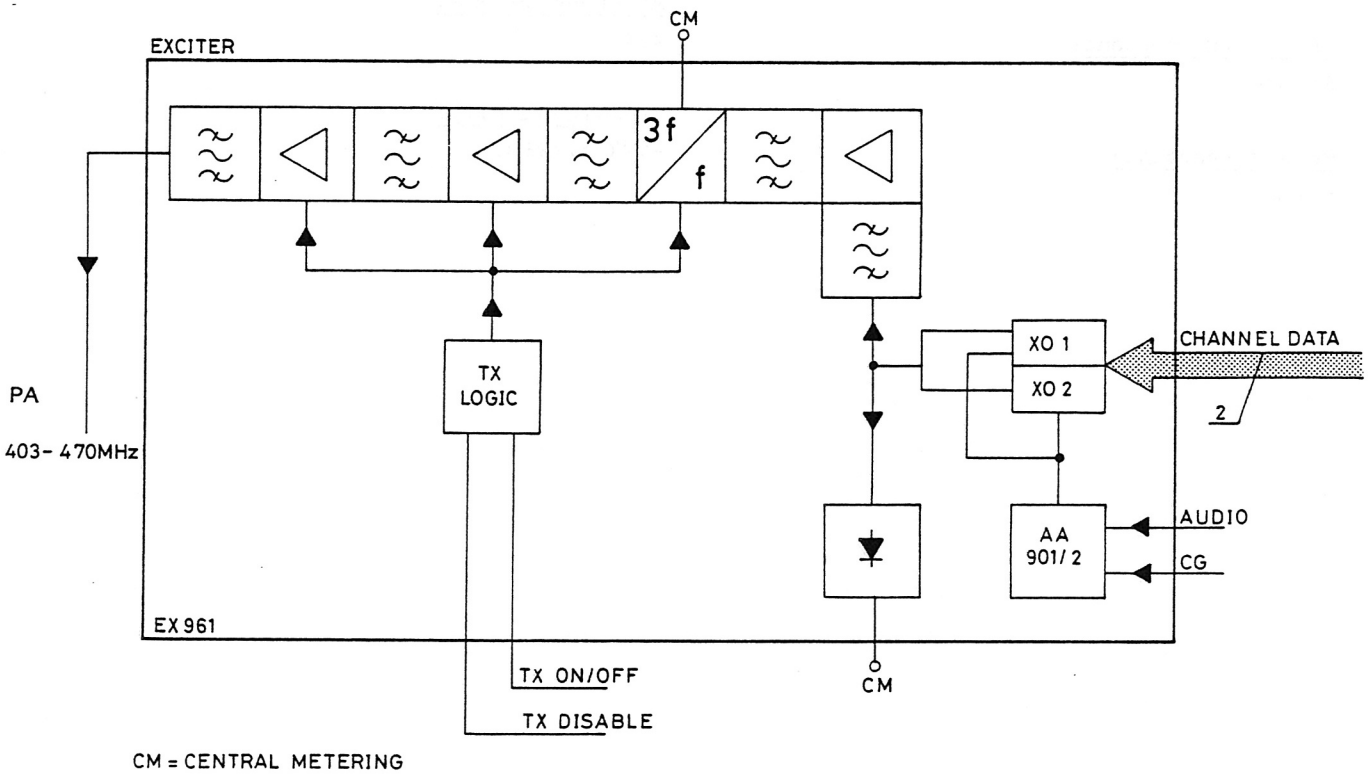

CM = CENTRAL METERING

TECHNICAL SPECIFICATIONS

Channel guard input level
for Δf= 0.75 kHz
300 mV ±2 dB

AF input with preemphasis
for Δf= 3 kHz, fmod= 1 kHz
100 mV ±2 dB

AF input impedance
600 ohm

TX ON/OFF
<0.8 V/open coll.

RF output level
24 to 27 dBm

RF nominal impedance
50 ohm

RF load impedance
50 ohm

Supply voltage
9 V ±5%

XO Voltage
9 V ±0.5%

Current consumption
(without XO's and AA)
<300 mA

Output frequency
403-470 MHz

Max. channel spacing
4.5 MHz

AF distortion (EIA)
<2%

Temperature range
$-40^{o}C$ to $+85^{o}C$

Storno

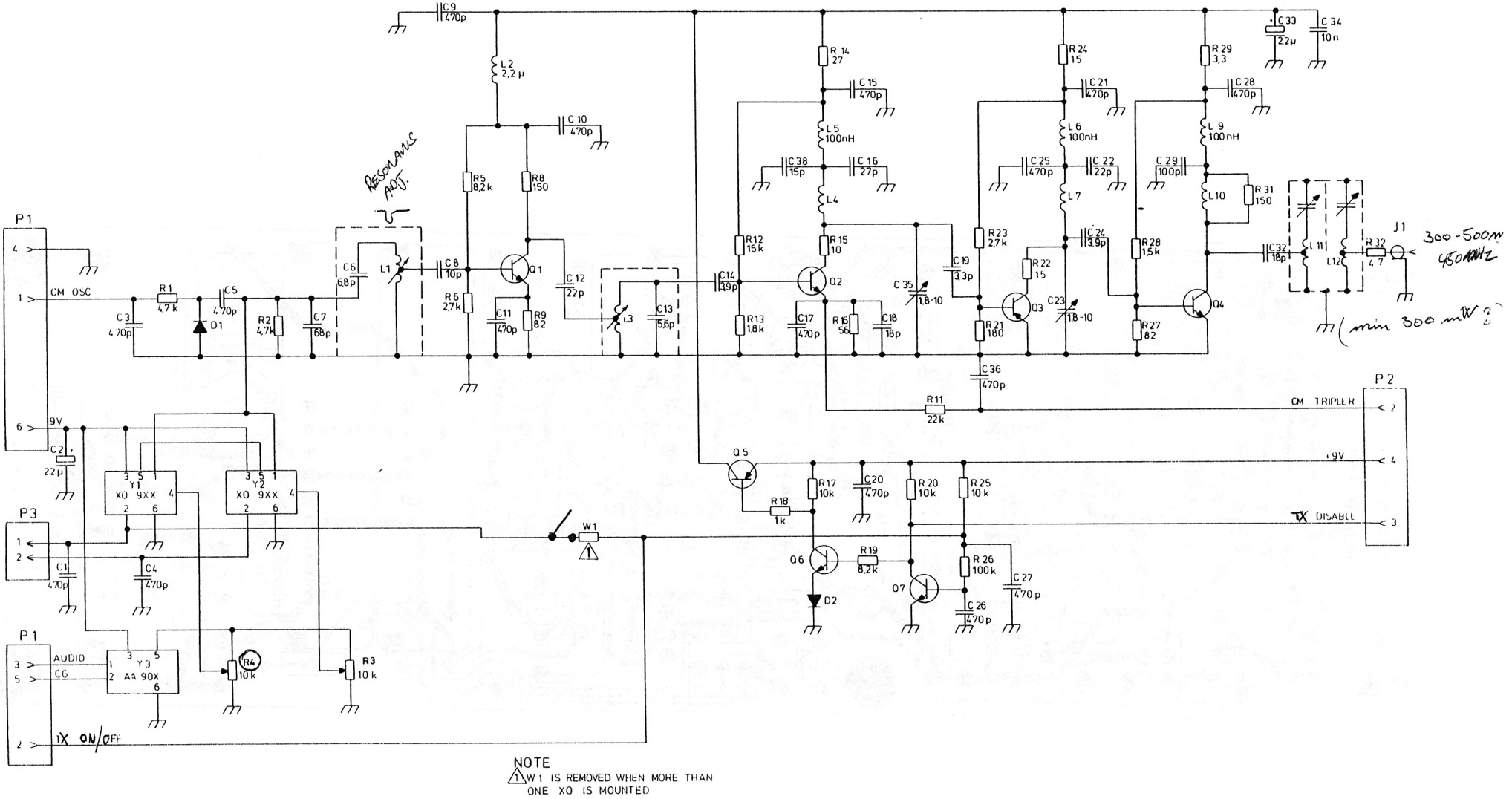

NOTE
⚠1 W1 IS REMOVED WHEN MORE THAN ONE XO IS MOUNTED

EXCITER EX961

CODE NO.19M90549G1 | D403.385/2

Storno

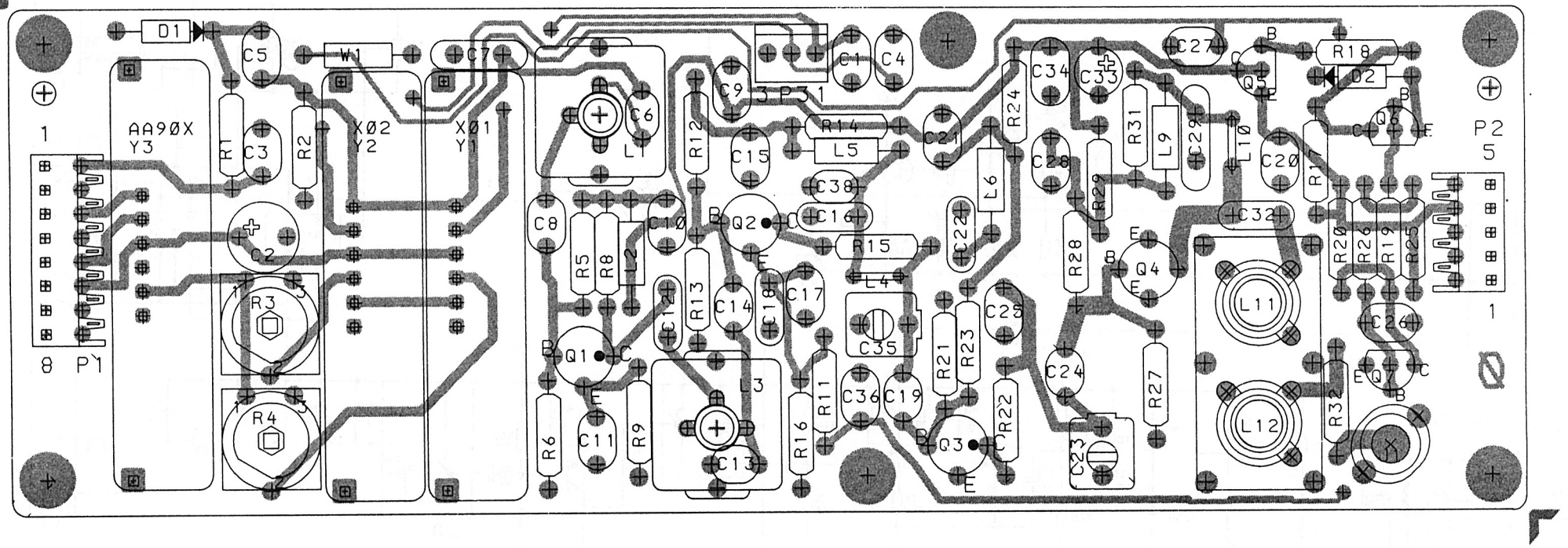

EXCITER EX961

CODE NO. 19M905493 G1 D403.395

ITEM NUMBER DESCRIPTION

M905493G1 EX 961

==========

P A R T S L I S T :

CIRCUIT POSITION	COMPONENT ITEM NUMBER	COMPONENT DESCRIPTION	QUANTITY TOTAL
C01	A700233P5	CAP CER CL2 470P 20% 50V	1
C02	A701534P8	CAP TA SOL 22U 20% 16V	1
C03	A700233P5	CAP CER CL2 470P 20% 50V	1
C04	A700233P5	CAP CER CL2 470P 20% 50V	1
C05	A700233P5	CAP CER CL2 470P 20% 50V	1
C06	A700235P11	CAP CER N150 6P8.25P 50V	1
C07	A700235P23	CAP CER N150 68P 5% 50V	1
C08	A700235P13	CAP CER N150 10P 5% 50V	1
C09	A700233P5	CAP CER CL2 470P 20% 50V	1
C10	A700233P5	CAP CER CL2 470P 20% 50V	1
C11	A700233P5	CAP CER CL2 470P 20% 50V	1
C12	A700235P17	CAP CER N150 22P 5% 50V	1
C13	A700235P10	CAP CER N150 5P6.25P 50V	1
C14	A700235P8	CAP CER N150 3P9.25P 50V	1
C15	A700233P5	CAP CER CL2 470P 20% 50V	1
C16	A700235P18	CAP CER N150 27P 5% 50V	1
C17	A700233P5	CAP CER CL2 470P 20% 50V	1
C18	A700235P16	CAP CER N150 18P 5% 50V	1
C19	A700235P7	CAP CER N150 3P3.25P 50V	1
C20	A700233P5	CAP CER CL2 '470P 20% 50V	1
C21	A700233P5	CAP CER CL2 470P 20% 50V	1
C22	A700235P17	CAP CER N150 22P 5% 50V	1
C23	J706003P1	CAP VAR 1,8/10PF	1
C24	A700235P8	CAP CER N150 3P9.25P 50V	1
C25	A700233P1	CAP CER CL2 100P 20% 50V	1
C26	A700233P5	CAP CER CL2 470P 20% 50V	1
C27	A700233P5	CAP CER CL2 470P 20% 50V	1
C28	A700233P5	CAP CER CL2 470P 20% 50V	1
C29	A700235P25	CAP CER N150 100P 5% 50V	1
C32	A700235P16	CAP CER N150 18P 5% 50V	1
C33	A701534P5	CAP TA SOL 2U2 20% 35V	1
C34	A700234P7	CAP PYES 10N 10% 50V	1
C35	J706003P1	CAP VAR 1,8/10PF	1
C36	A700233P5	CAP CER CL2 470P 20% 50V	1
C38	A700235P15	CAP CER N150 15P 5% 50V	1
D01	A700047P1	DIO SI SIG 2835	1
D02	A700028P1	DIO SI SIG 1N4148	1
J01	A700171P2	CONN PWB FEM PHONO	1
L01	J706537G2	COIL	1
L02	A700024P17	COIL FIX 2,2UH 10%	1
L03	J706537G1	COIL	1
L04	J707778P2	COIL AIR	1
L05	A700024P1	COIL FIX 100NH 10%	1
L06	A700024P1	COIL FIX 100NH 10%	1

CIRCUIT POSITION	COMPONENT ITEM NUMBER	COMPONENT DESCRIPTION	QUANTITY TOTAL
L09	A700024P1	COIL FIX 100NH 10%	1
L10	J707778P2	COIL AIR	1
L11	J706154P2	COIL RF FIX 7-1/2T TAP	1
L12	J706154P2	COIL RF FIX 7-1/2T TAP	1
P01	A700041P7	CONN PWB FEM 08 CKT	1
P02	A700041P4	CONN PWB FEM 05 CKT	1
P03	A700072P29	CONN PWB MALE 03 CKT	1
Q01	J706011P1	TSTR NPN SI BFR 91	1
Q02	J706011P1	TSTR NPN SI BFR 91	1
Q03	J706012P1	TSTR NPN SI BFR 96	1
Q04	A701940P1	TSTR NPN SI RF-PWR 0.4W	1
Q05	J707435P1	TSTR PNP SI BC 369	1
Q06	J707511P1	TSTR NPN SI BC 548A/B	1
Q07	J707511P1	TSTR NPN SI BC 548A/B	1
R01	A700019P45	RES DEPC 4K7 5% 1/4W	1
R02	A700019P45	RES DEPC 4K7 5% 1/4W	1
R03	A700185P4	RES VAR 10K0 20% 0,33W	1
R04	A700185P4	RES VAR 10K0 20% 0,33W	1
R05	A700019P48	RES DEPC 8K2 5% 1/4W	1
R06	A700019P42	RES DEPC 2K7 5% 1/4W	1
R08	A700019P27	RES DEPC 150R 5% 1/4W	1
R09	A700019P24	RES DEPC 82R 5% 1/4W	1
R11	A700019P53	RES DEPC 22K 5% 1/4W	1
R12	A700019P51	RES DEPC 15K 5% 1/4W	1
R13	A700019P40	RES DEPC 1K8 5% 1/4W	1
R14	A700019P18	RES DEPC 27R 5% 1/4W	1
R15	A700019P13	RES DEPC 10R 5% 1/4W	1
R16	A700019P22	RES DEPC 56R 5% 1/4W	1
R17	A700019P49	RES DEPC 10K 5% 1/4W	1
R18	A700019P37	RES DEPC 1K0 5% 1/4W	1
R19	A700019P48	RES DEPC 8K2 5% 1/4W	1
R20	A700019P49	RES DEPC 10K 5% 1/4W	1
R21	A700019P28	RES DEPC 180R 5% 1/4W	1
R22	A700019P15	RES DEPC 15R 5% 1/4W	1
R23	A700019P42	RES DEPC 2K7 5% 1/4W	1
R24	A700019P15	RES DEPC 15R 5% 1/4W	1
R25	A700019P49	RES DEPC 10K 5% 1/4W	1
R26	A700019P61	RES DEPC 100K 5% 1/4W	1
R27	A700019P24	RES DEPC 82R 5% 1/4W	1
R28	A700019P39	RES DEPC 1K5 5% 1/4W	1
R29	A700019P7	RES DEPC 3R3 5% 1/4W	1
R31	A700019P27	RES DEPC 150R 5% 1/4W	1
R32	A700019P9	RES DEPC 4R7 5% 1/4W	1
W0	A700184P1	WIRE JUMPER (ZEROHM)	1
003	J707745P1	SHIELD MODIF. CSTG HELICAL	1
004	A700069P1	CAN	2
005	J706109P1	SCR TUN	2
006	J706110P1	SPG TUN	2
007	A701329P2	CONT EL PIN	18
008	A701785P2	CONTACT	6

Storno

FG961

FREQUENCY GENERATOR

FG961 supplies the receiver with the injection signal in simplex or duplex radio, multiplier version. The output frequency range 381.6 - 448.6 MHz corresponds to the antenna frequency range 403-470 MHz.
Max. number of channels are 3 with max. spacing on 4.5 MHz. If only one XO is used, it shall be placed as XO no. 1 and it will be on continuously. If two or more are used, the shorting W1 is disconnected and the channel frequencies are selected from the control unit.

The module can be supplied with max. 3 XO's which are plug-in modules. The output from the selected XO is filtered through a four bandpass filter, tripled and amplified to the specified output level. There are two central metering points for use during test and alignment.

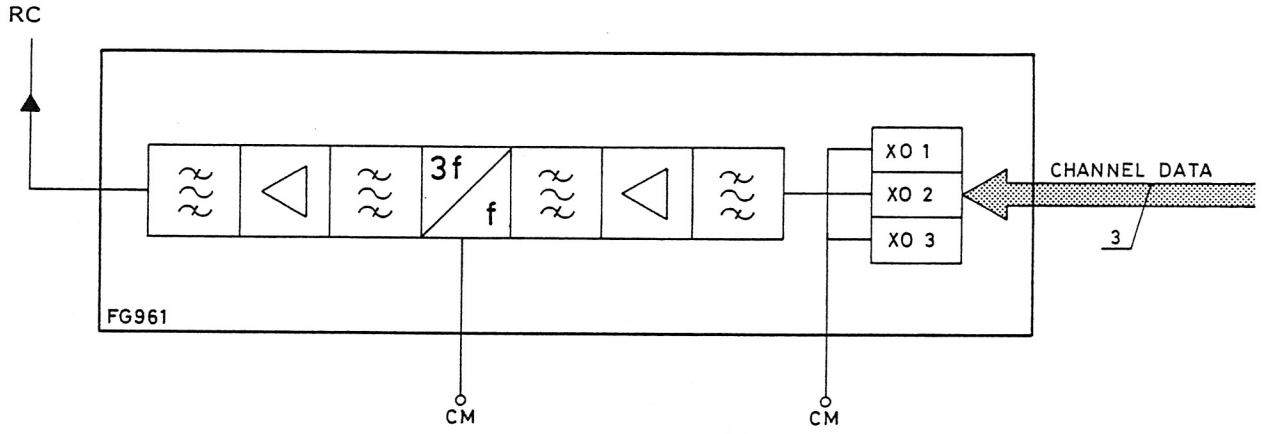

TECHNICAL SPECIFICATIONS

Output frequency
381.6 - 448.6 MHz

Output level
+9 - +13 dBm

Impedance
50 ohm

Max. channel spacing
4.5 MHz

Supply voltage
9 V ±5%

XO Voltage
9 V ±0.5%

Current consumption
<100 mA excl. oscillators

Temperature range
-40°C to +85°C

Storno

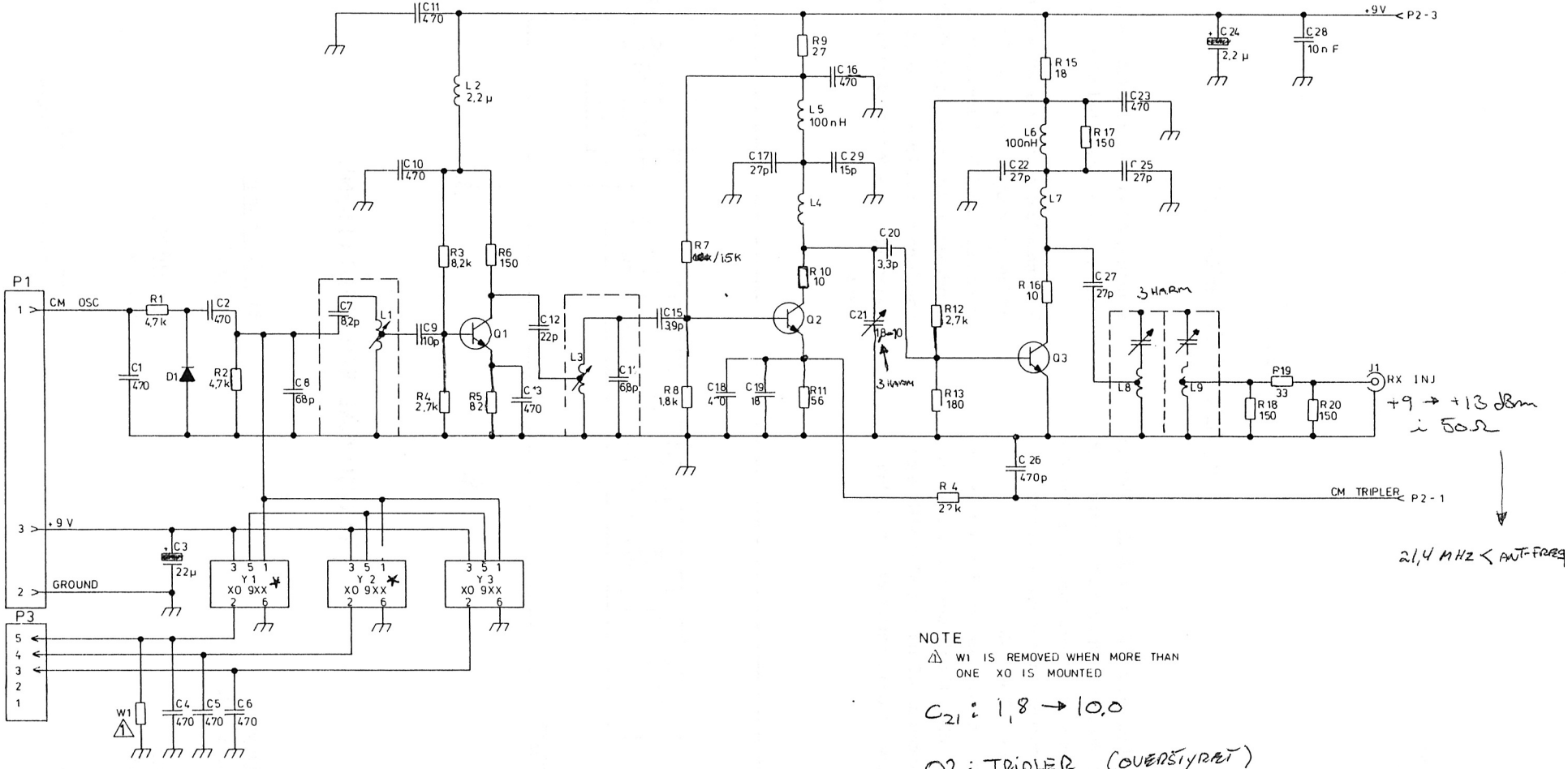

NOTE

⚠ W1 IS REMOVED WHEN MORE THAN ONE XO IS MOUNTED

C_{21} : 1,8 → 10,0

Q2 : TRIPLER (OVERSTYRET)

Y1 SVINGER Y"0" på PINS/P3

OBS (L8/L9) : V/DÆKLIG FØLSOMHED

RENS HUSET/SPOLERNE (METALHÅR)

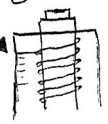

FREQUENCY GENERATOR FG961

CODF NO.19M905497G1 D403.387

Storno

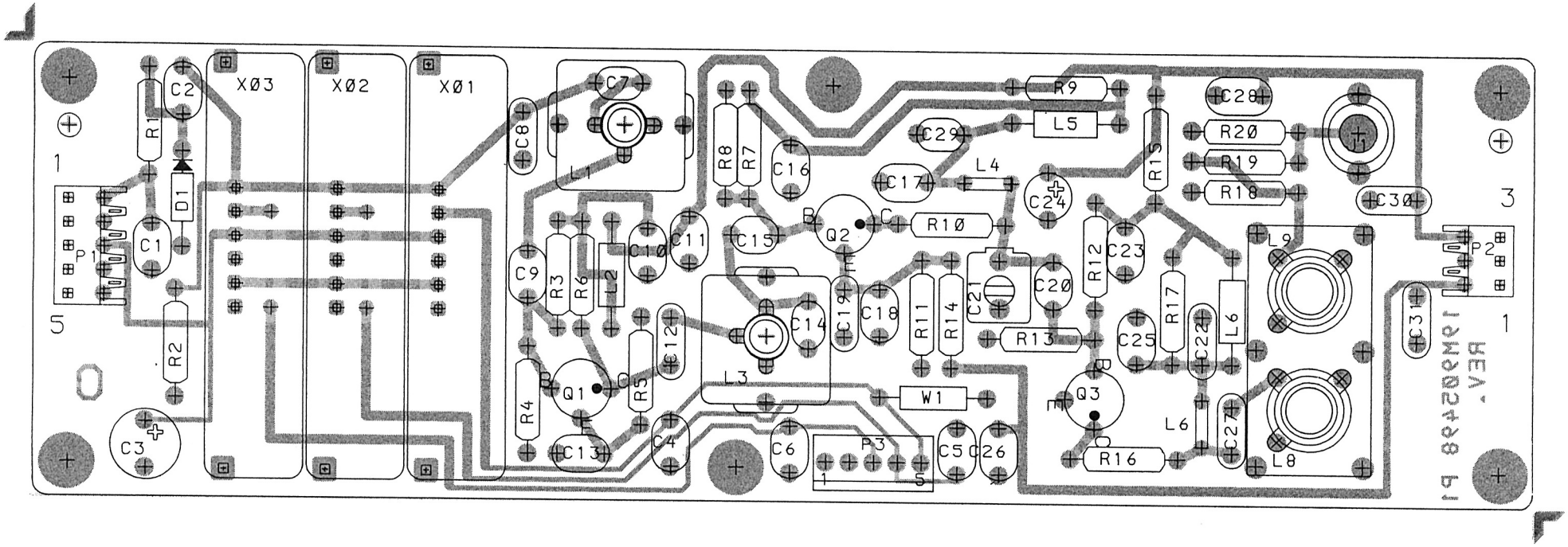

FREQUENCY GENERATOR FG961

CODE NO.19M905497G1 D403.394

ITEM NUMBER DESCRIPTION

M905497G1 FG 961

==========

P A R T S L I S T :

CIRCUIT POSITION	COMPONENT ITEM NUMBER	COMPONENT DESCRIPTION	QUANTITY TOTAL
C01	A700233P5	CAP CER CL2 470P 20% 50V	1
C02	A700233P5	CAP CER CL2 470P 20% 50V	1
C03	A701534P8	CAP TA SOL 22U 20% 16V	1
C04	A700233P5	CAP CER CL2 470P 20% 50V	1
C05	A700233P5	CAP CER CL2 470P 20% 50V	1
C06	A700233P5	CAP CER CL2 470P 20% 50V	1
C07	A700235P12	CAP CER N150 8P2.25P 50V	1
C08	A700235P23	CAP CER N150 68P 5% 50V	1
C09	A700235P13	CAP CER N150 10P 5% 50V	1
C10	A700233P5	CAP CER CL2 470P 20% 50V	1
C11	A700233P5	CAP CER CL2 470P 20% 50V	1
C12	A700235P17	CAP CER N150 22P 5% 50V	1
C13	A700233P5	CAP CER CL2 470P 20% 50V	1
C14	A700235P11	CAP CER N150 6P8.25P 50V	1
C15	A700235P8	CAP CER N150 3P9.25P 50V	1
C16	A700233P5	CAP CER CL2 470P 20% 50V	1
C17	A700235P18	CAP CER N150 27P 5% 50V	1
C18	A700233P5	CAP CER CL2 470P 20% 50V	1
C19	A700235P16	CAP CER N150 18P 5% 50V	1
C20	A700235P7	CAP CER N150 3P3.25P 50V	1
C21	J706003P1	CAP VAR 1,8/10PF	1
C22	A700235P18	CAP CER N150 27P 5% 50V	1
C23	A700233P5	CAP CER CL2 470P 20% 50V	1
C24	A701534P5	CAP TA SOL 2U2 20% 35V	1
C25	A700235P18	CAP CER N150 27P 5% 50V	1
C26	A700233P5	CAP CER CL2 470P 20% 50V	1
C27	A700235P18	CAP CER N150 27P 5% 50V	1
C28	A700234P7	CAP PYES 10N 10% 50V	1
C29	A700235P15	CAP CER N150 15P 5% 50V	1
C30	A700235P18	CAP CER N150 27P 5% 50V	1
C31	A700235P18	CAP CER N150 27P 5% 50V	1
D01	A700047P1	DIO SI SIG 2835	1
J01	A700171P2	CONN PWB FEM PHONO	1
L01	J706537G2	COIL	1
L02	A700024P17	COIL FIX 2,2UH 10%	1
L03	J706537G1	COIL	1
L04	J707778P1	COIL AIR	1
L05	A700024P1	COIL FIX 100NH 10%	1
L06	A700024P1	COIL FIX 100NH 10%	1
L07	J707778P1	COIL AIR	1
L08	J706154P2	COIL RF FIX 7-1/2T TAP	1
L09	J706154P2	COIL RF FIX 7-1/2T TAP	1
P01	A700041P4	CONN PWB FEM 05 CKT	1

CIRCUIT POSITION	COMPONENT ITEM NUMBER	COMPONENT DESCRIPTION	QUANTITY TOTAL
P02	A700041P2	CONN PWB FEM 03 CKT	1
P03	A700072P31	CONN PWB MALE 05 CKT	1
Q01	J706011P1	TSTR NPN SI BFR 91	1
Q02	J706011P1	TSTR NPN SI BFR 91	1
Q03	J706012P1	TSTR NPN SI BFR 96	1
R01	A700019P45	RES DEPC 4K7 5% 1/4W	1
R02	A700019P45	RES DEPC 4K7 5% 1/4W	1
R03	A700019P48	RES DEPC 8K2 5% 1/4W	1
R04	A700019P42	RES DEPC 2K7 5% 1/4W	1
R05	A700019P24	RES DEPC 82R 5% 1/4W	1
R06	A700019P27	RES DEPC 150R 5% 1/4W	1
R07	A700019P51	RES DEPC 15K 5% 1/4W	1
R08	A700019P40	RES DEPC 1K8 5% 1/4W	1
R09	A700019P18	RES DEPC 27R 5% 1/4W	1
R10	A700019P13	RES DEPC 10R 5% 1/4W	1
R11	A700019P22	RES DEPC 56R 5% 1/4W	1
R12	A700019P42	RES DEPC 2K7 5% 1/4W	1
R13	A700019P28	RES DEPC 180R 5% 1/4W	1
R14	A700019P53	RES DEPC 22K 5% 1/4W	1
R15	A700019P16	RES DEPC 18R 5% 1/4W	1
R16	A700019P13	RES DEPC 10R 5% 1/4W	1
R17	A700019P27	RES DEPC 150R 5% 1/4W	1
R18	A700019P27	RES DEPC 150R 5% 1/4W	1
R19	A700019P19	RES DEPC 33R 5% 1/4W	1
R20	A700019P27	RES DEPC 150R 5% 1/4W	1
R21	A700019P30	RES DEPC 270R 5% 1/4W	1
R22	A700019P30	RES DEPC 270R 5% 1/4W	1
W01	A700184P1	WIRE JUMPER (ZEROHM)	1
003	K805050P1	CSTG HEL	1
004	A700069P1	CAN	2
005	J706109P1	SCR TUN	2
006	J706110P1	SPG TUN	2
007	A701329P2	CONT EL PIN	18
008	A701785P2	CONTACT	6

Storno

FN909

FEED THROUGH FILTER

FN909 is a filter built on a printed wiring board. 21 chip capacitors mounted on the module decouple the input and output lines from the receiver screen box. Mechanical the filter is used to close the slot where the lines are brought out of the screen box in order to attenuate unwanted radiation.

SPECIFICATIONS

Dimensions
Width 29 mm
Length 96 mm

Temperature range
$-40^{o}C$ to $+85^{o}C$

COMPONENT SIDE

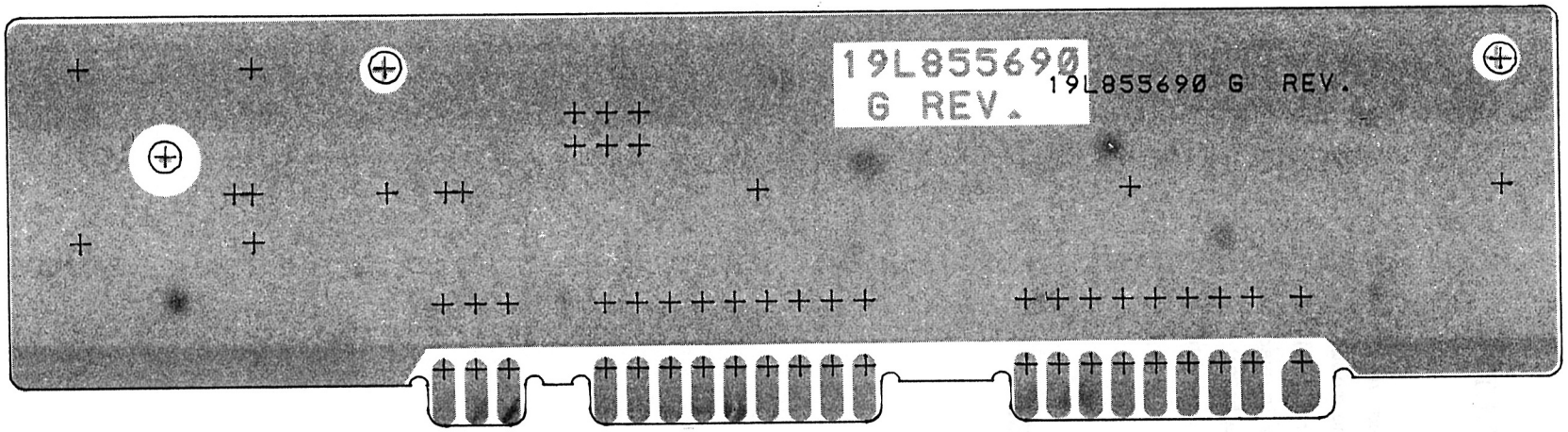

CHIP SIDE

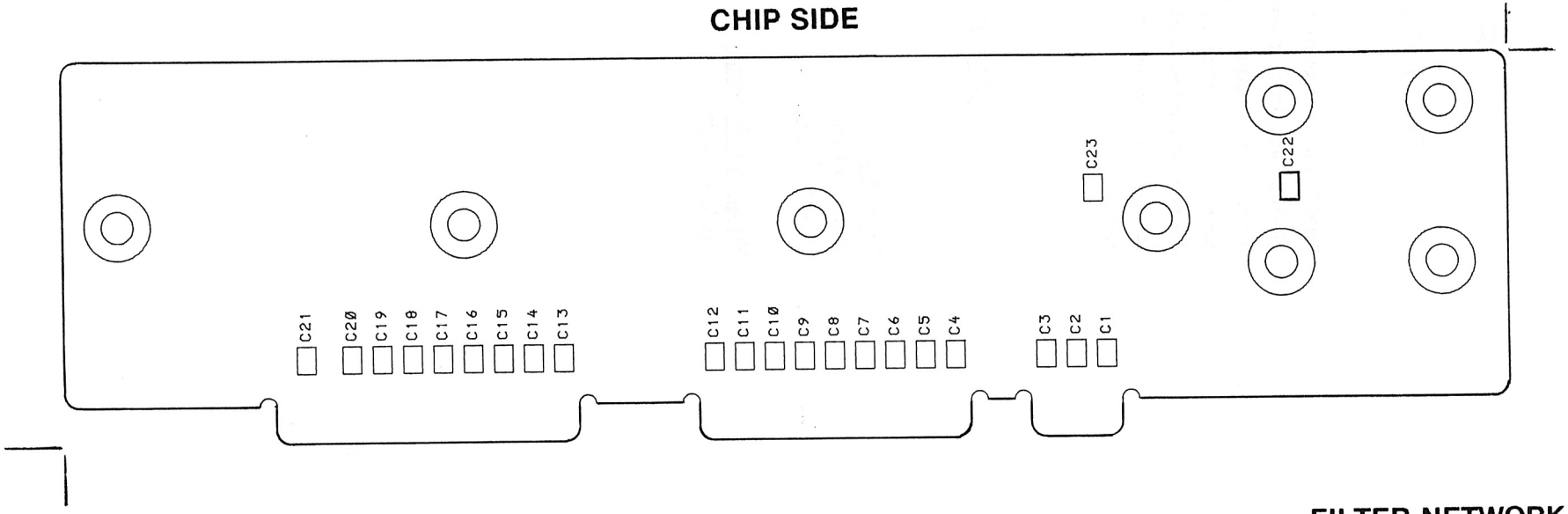

FILTER NETWORK FN909
COMPONENT LAYOUT
REV.3 **D404.257/4**

DATE: 10/12/1987

Pos	Code No	Description	Qt
C001	J707436P61	CAP CER NPO 100P 5%	1
C002	J707436P61	CAP CER NPO 100P 5%	1
C003	J707436P61	CAP CER NPO 100P 5%	1
C004	J707436P61	CAP CER NPO 100P 5%	1
C005	J707436P61	CAP CER NPO 100P 5%	1
C006	J707436P61	CAP CER NPO 100P 5%	1
C007	J707436P61	CAP CER NPO 100P 5%	1
C008	J707436P61	CAP CER NPO 100P 5%	1
C009	J707436P61	CAP CER NPO 100P 5%	1
C010	J707436P61	CAP CER NPO 100P 5%	1
C011	J707436P61	CAP CER NPO 100P 5%	1
C012	J707436P61	CAP CER NPO 100P 5%	1
C013	J707436P61	CAP CER NPO 100P 5%	1
C014	J707436P61	CAP CER NPO 100P 5%	1
C015	J707436P61	CAP CER NPO 100P 5%	1
C016	J707436P61	CAP CER NPO 100P 5%	1
C017	J707436P61	CAP CER NPO 100P 5%	1
C018	J707436P61	CAP CER NPO 100P 5%	1
C019	J707436P61	CAP CER NPO 100P 5%	1
C020	J707436P61	CAP CER NPO 100P 5%	1
C021	J707436P61	CAP CER NPO 100P 5%	1
C022	J707809P8	CAP CER NPO 3P9 .25P	1
C023	J707809P8	CAP CER NPO 3P9 .25P	1
	L855691P1R3	BD PW	1
		NON ELECTRONICAL PARTS	
	J708450P2	SPC SELF-CNCH 5.6X1.5XM3	8

Pos	Code No	Description	Qt

PARTS LIST FILTER NETWORK FN909 : L855690G1

X404.605/3

FN9010/FN9012

FEED THROUGH FILTER

FN9010/FN9012 are filters built on a printed wiring board. 18 chip capacitors mouted on the module decouple the i8nput and output lines from thr transmitter screen box. Mechanically, the filter is used to close the slot where the lines are brought out of the screen box in order to attenuate unwanted radiation.

The printed wiring board also contains a micro striplines and some capacitors, resistors and two transistors which form a standing wave detector.

The output voltage between 0,8 volt and 6,0 volt depends on the output power from the PA stage and the frequency band.

FN9010 is used in connection with JP9011 in CQF911x, CQF933x and CQF977x.
FN9012 is used in connection with JP9015 in CQF955x, CQF966x and CQF999x.

SPECIFICATIONS

Dimensions
Width: 34 mm
Length: 106 mm

Temperature range
$-40^{O}C$ to $+85^{O}C$

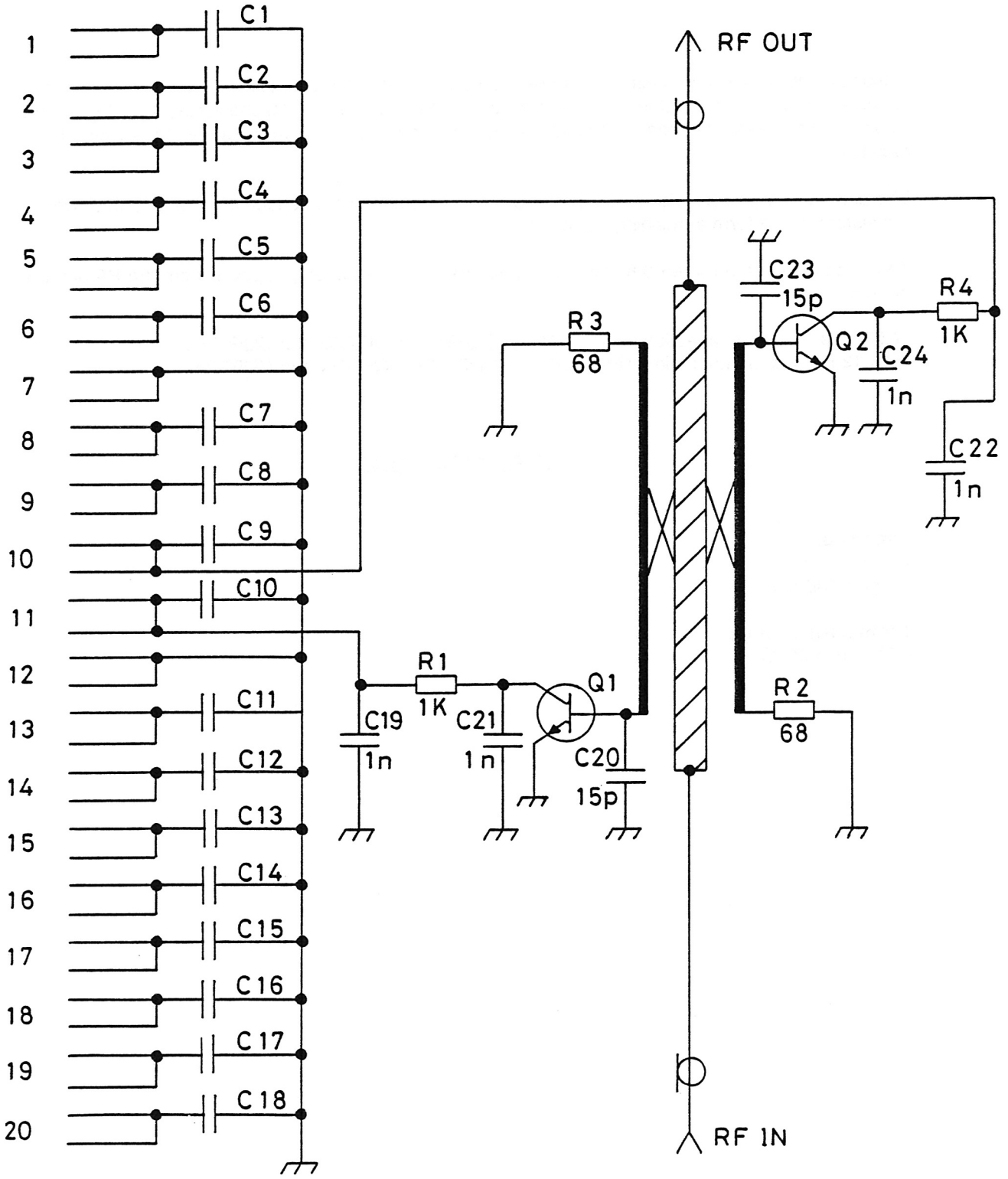

FILTER NETWORK FN9010

D404.330

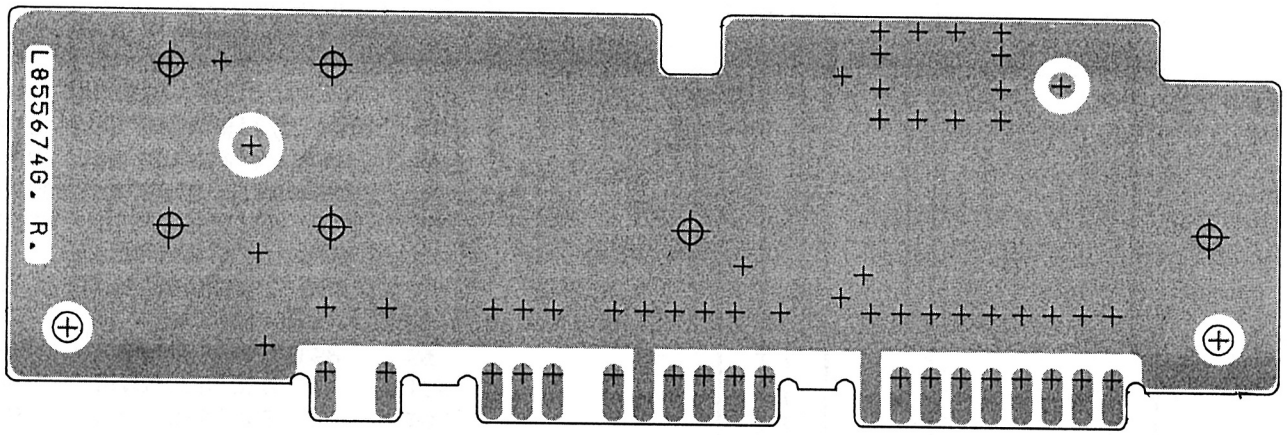

CHIP SIDE

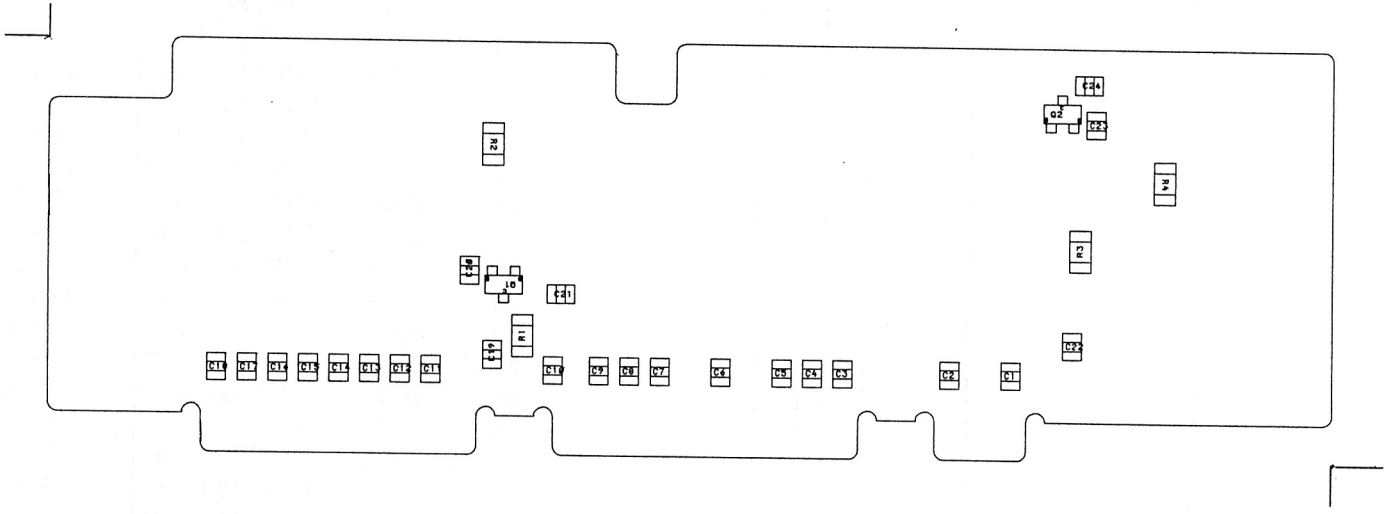

FILTER NETWORK FN9010
COMPONENT LAYOUT
REV. 2

D404.26312

Pos.	Code No.	Description	Qt.
C001	J707436P61	CAP,CER,NPO 100P , 5%	1
C002	J707436P61	CAP,CER,NPO 100P , 5%	1
C003	J707436P61	CAP,CER,NPO 100P , 5%	1
C004	J707436P61	CAP,CER,NPO 100P , 5%	1
C005	J707436P61	CAP,CER,NPO 100P , 5%	1
C006	J707436P61	CAP,CER,NPO 100P , 5%	1
C007	J707436P61	CAP,CER,NPO 100P , 5%	1
C008	J707436P61	CAP,CER,NPO 100P , 5%	1
C009	J707436P61	CAP,CER,NPO 100P , 5%	1
C010	J707436P61	CAP,CER,NPO 100P , 5%	1
C011	J707436P61	CAP,CER,NPO 100P , 5%	1
C012	J707436P61	CAP,CER,NPO 100P , 5%	1
C013	J707436P61	CAP,CER,NPO 100P , 5%	1
C014	J707436P61	CAP,CER,NPO 100P , 5%	1
C015	J707436P61	CAP,CER,NPO 100P , 5%	1
C016	J707436P61	CAP,CER,NPO 100P , 5%	1
C017	J707436P61	CAP,CER,NPO 100P , 5%	1
C018	J707436P61	CAP,CER,NPO 100P , 5%	1
C019	J707438P5	CAP,CER,CL2 1N , 10%	1
C020	J707436P21	CAP,CER,NPO 15P , 5%	1
C021	J707438P5	CAP,CER,CL2 1N , 10%	1
C022	J707438P5	CAP,CER,CL2 1N , 10%	1
C023	J707436P21	CAP,CER,NPO 15P , 5%	1
C024	J707438P5	CAP,CER,CL2 1N , 10%	1
Q001	J707418P1	TSTR,NPN,SI BFS 17	1
Q002	J707418P1	TSTR,NPN,SI BFS 17	1
R001	J707385P102	RES,MFLM,1/8W 1KO , 5%	1
R002	J707385P680	RES,MFLM,1/8W 68R , 5%	1
R003	J707385P680	RES,MFLM,1/8W 68R , 5%	1
R004	J707385P102	RES,MFLM,1/8W 1KO , 5%	1
0002	L855675P1R2	BD PW	1
		NON ELECTRICAL PARTS	
	J708450P2	SPC,SELF-CNCH 5.6X1.5XM3	6

Pos.	Code No.	Description	Qt.

Parts List FILTER NETWORK FN9010 : L855674G1

X404.606

FN9010/FN9012

FEED THROUGH FILTER

FN9010/FN9012 are filters built on a printed wiring board. 18 chip capacitors mouted on the module decouple the i8nput and output lines from thr transmitter screen box. Mechanically, the filter is used to close the slot where the lines are brought out of the screen box in order to attenuate unwanted radiation.

The printed wiring board also contains a micro striplines and some capacitors, resistors and two transistors which form a standing wave detector.

The output voltage between 0,8 volt and 6,0 volt depends on the output power from the PA stage and the frequency band.

FN9010 is used in connection with JP9011 in CQF911x, CQF933x and CQF977x.
FN9012 is used in connection with JP9015 in CQF955x, CQF966x and CQF999x.

SPECIFICATIONS

Dimensions
Width: 34 mm
Length: 106 mm

Temperature range
$-40^{o}C$ to $+85^{o}C$

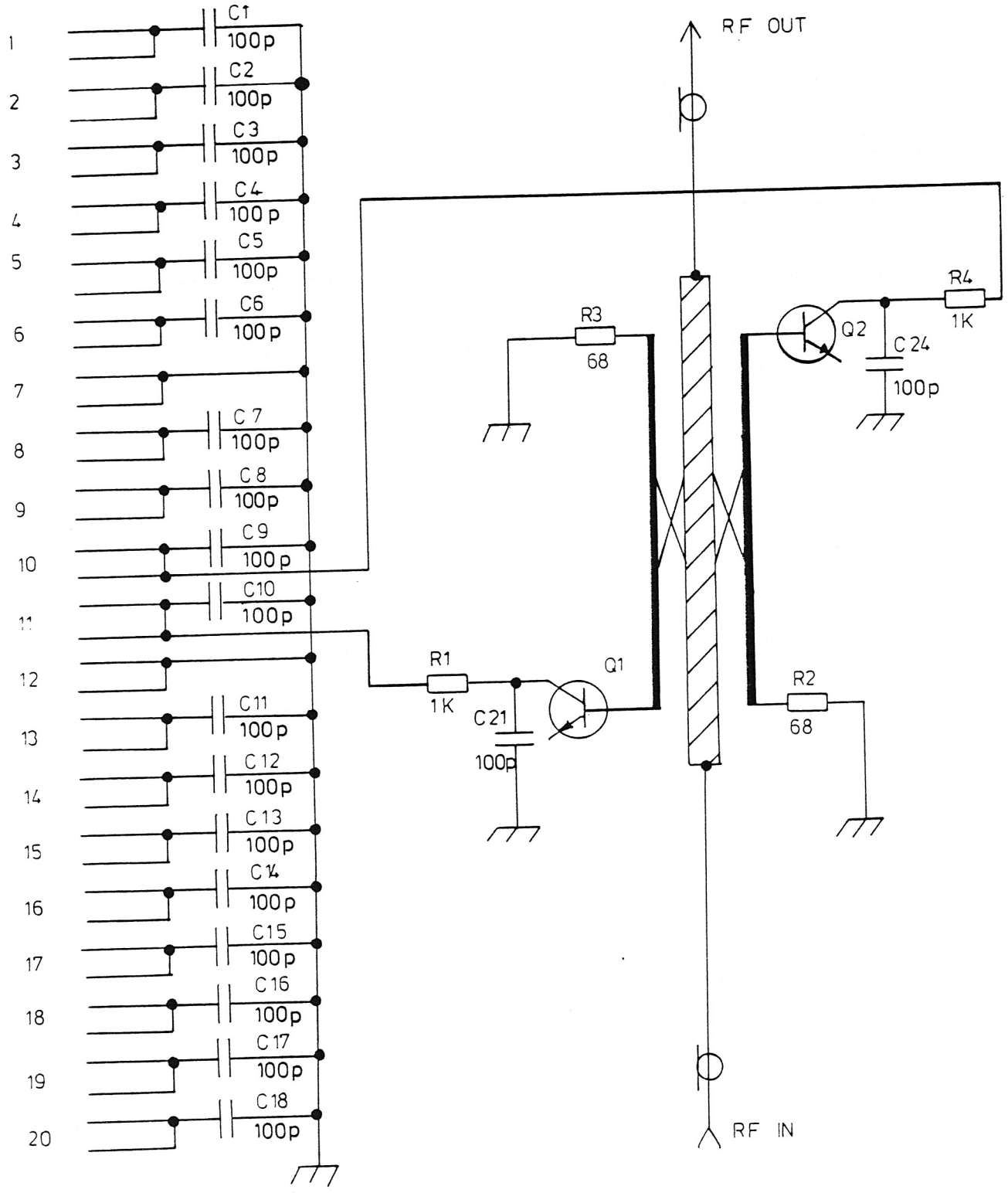

FILTER NETWORK FN9012

CODE NO.L855976G1 D404.756

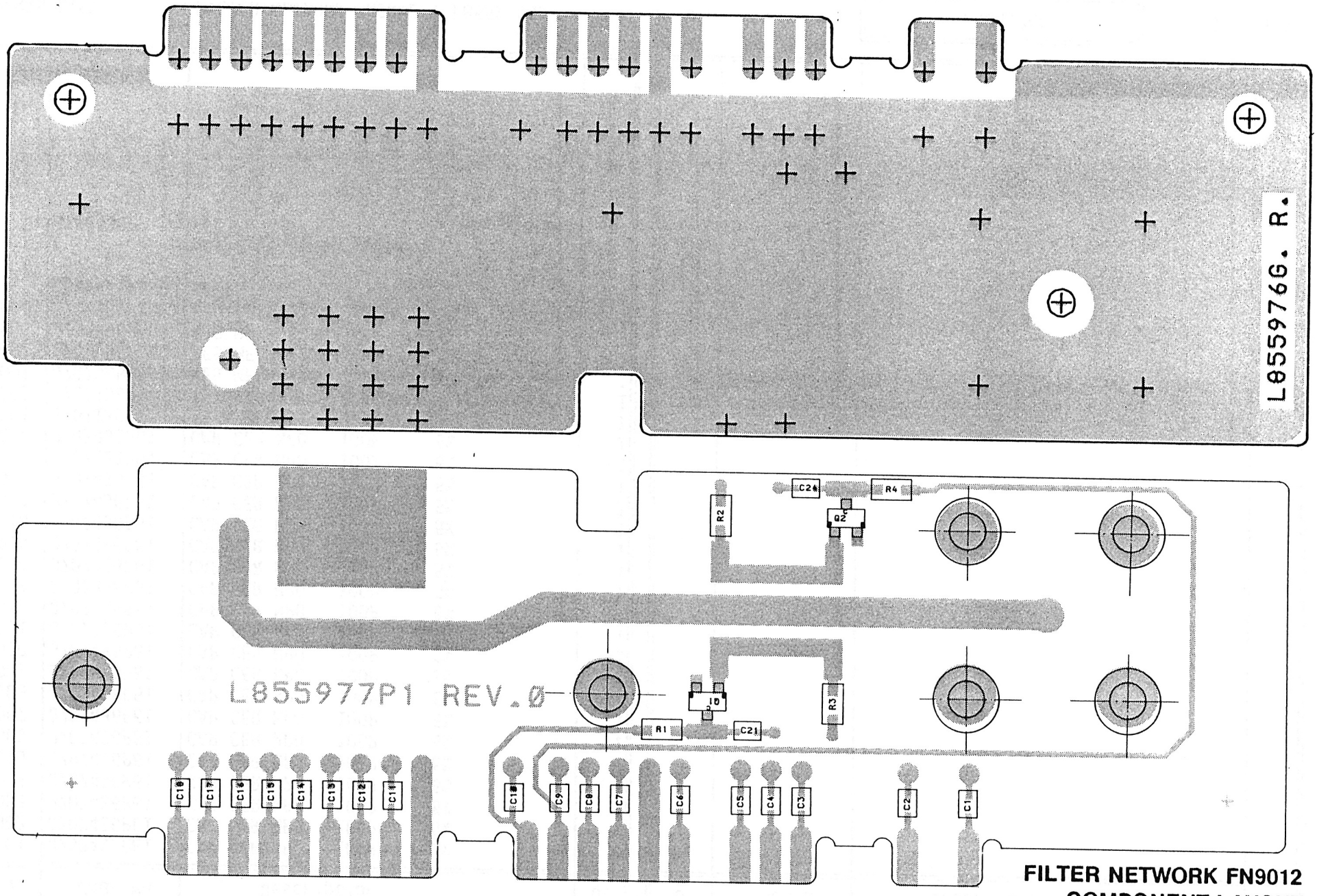

FILTER NETWORK FN9012
COMPONENT LAYOUT

CODE NO.L855976G1 | **D404.757**

DATE: 6/12/1987

Pos	Code No	Description	Qt
C001	J707436P61	CAP CER NPO 100P 5%	1
C002	J707436P61	CAP CER NPO 100P 5%	1
C003	J707436P61	CAP CER NPO 100P 5%	1
C004	J707436P61	CAP CER NPO 100P 5%	1
C005	J707436P61	CAP CER NPO 100P 5%	1
C006	J707436P61	CAP CER NPO 100P 5%	1
C007	J707436P61	CAP CER NPO 100P 5%	1
C008	J707436P61	CAP CER NPO 100P 5%	1
C009	J707436P61	CAP CER NPO 100P 5%	1
C010	J707436P61	CAP CER NPO 100P 5%	1
C011	J707436P61	CAP CER NPO 100P 5%	1
C012	J707436P61	CAP CER NPO 100P 5%	1
C013	J707436P61	CAP CER NPO 100P 5%	1
C014	J707436P61	CAP CER NPO 100P 5%	1
C015	J707436P61	CAP CER NPO 100P 5%	1
C016	J707436P61	CAP CER NPO 100P 5%	1
C017	J707436P61	CAP CER NPO 100P 5%	1
C018	J707436P61	CAP CER NPO 100P 5%	1
C021	J707436P61	CAP CER NPO 100P 5%	1
C024	J707436P61	CAP CER NPO 100P 5%	1
Q001	J707139P1	TSTR NPN SI BFR 93	1
Q002	J707139P1	TSTR NPN SI BFR 93	1
R001	J707385P102	RES MFLM 1/8W 1KO 5%	1
R002	J707385P680	RES MFLM 1/8W 68R 5%	1
R003	J707385P680	RES MFLM 1/8W 68R 5%	1
R004	J707385P102	RES MFLM 1/8W 1KO 5%	1
	L855977P1R0	BD PW	1
		NON ELECTRONICAL PARTS	
	J708450P2	SPC SELF-CNCH 5	

Pos	Code No	Description	Qt

PARTS LIST FILTER NETWORK FN9012 : L855976G1

X404.760

Storno

FS90x

FREQUENCY SYNTHESIZER

The frequency synthesizer module is used to generate frequencies for up to 256 channels and is built on a printed wiring board which comprises an integrated synthesizer circuit, a voltage controlled oscillator (VCO), a loop switch circuit and two loop filters.

The integrated synthesizer circuit contains a reference oscillator, a programmable reference divider, two phase detectors, a lock detector circuit and the programmable divider which determines the channel frequency.

		FS906	FS907	FS908	FS909	FS9010	FS9011
Channel spacing	KHz	5.0	6.25	10.0	12.5	20.0	25.0
Reference Oscillator	MHz	10.24	12.80	10.24	12.80	10.24	12.80
Minimum Frequency	MHz	12.80	12.80	12.80	12.80	12.80	12.80
Maximum Frequency	MHz	14.075	14.39375	15.350	15.9875	15.340	19.175
Number of Channels		256	256	256	256	128	256

CIRCUIT DESCRIPTION

REFERENCE DIVIDER

The reference oscillator frequency is divided down to a frequency corresponding to the channel spacing. The programming of the reference divider is made with one or two straps and the output of the reference divider is fed to the two phase detectors.

PROGRAMMABLE DIVIDER

The programmable divider is programmed by 14 bits of which the 8 least significant bits are programmed either by the software or by the channel control. Of the 6 most significant bits two are fixed and 4 programmed by straps on the printed wiring board (straps A, B, C, D).

The VCO signal is fed through the programmable divider and divided down to a frequency equal to the reference frequency when the synthesizer's phase loop is locked.

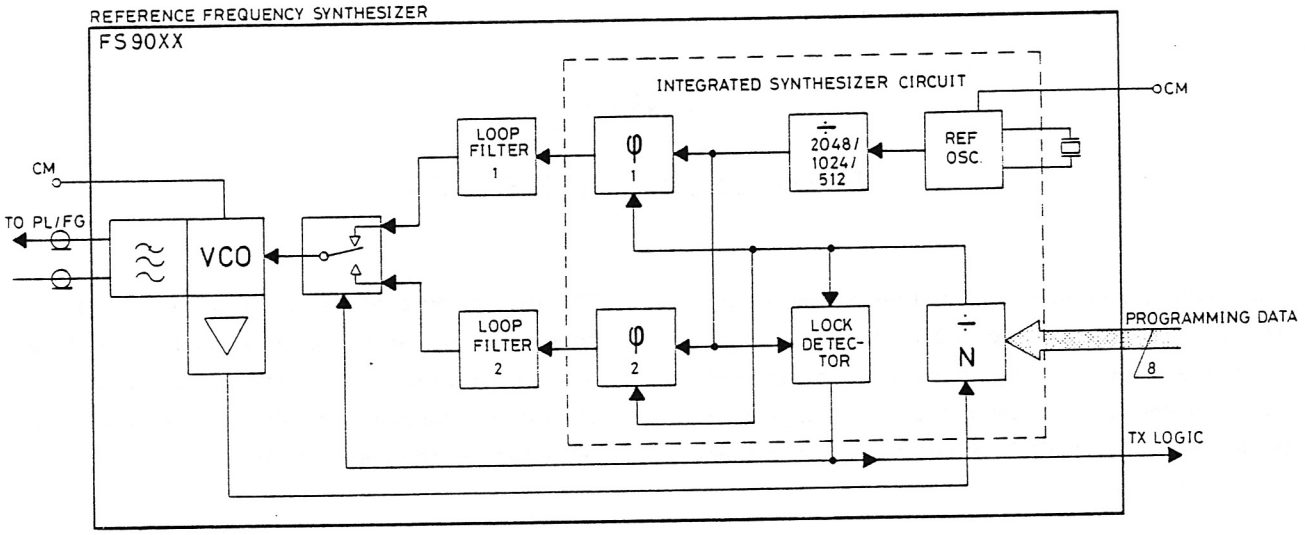

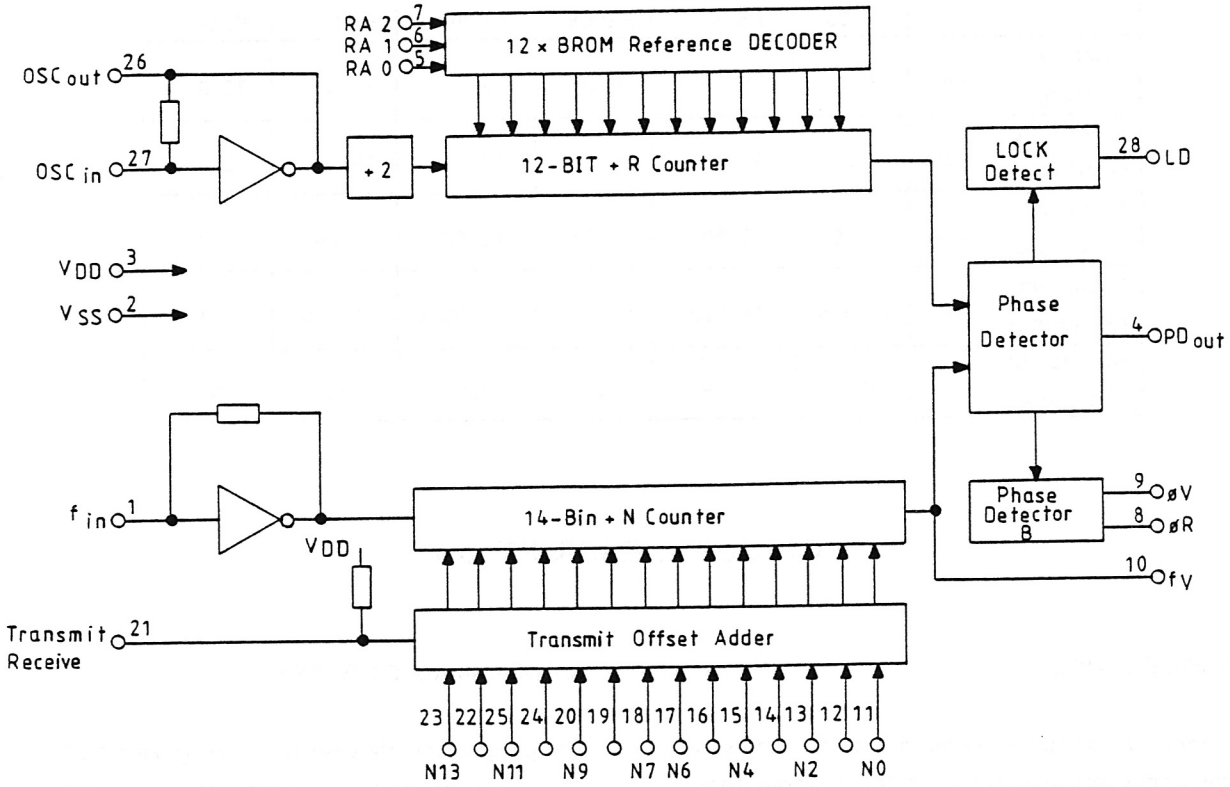

INTEGRATED SYNTHESIZER IN FS90xx
BLOCK DIAGRAM

D404.269

Pin	
1	Input to -N portion of synthesizer
2	Ground
3	Power Supply
4	Three-state output of phase detector
5, 6, 7	Set divide value
8, 9	Phase detector outputs
10	Output of the -N counter
11 to 20, 22 to 25	Data preset into the -N counter
21	Ofsetting the VCO frequency
26, 27	Reference oscillator
28	Lock detector signal

PHASE DETECTORS

The frequencies of the reference divider signal and the programmable divider signal are compared in the phase detectors where they produce a DC voltage proportional to their difference. The DC voltage is used to control the VCO through the loop filters.

LOOP FILTERS

The DC voltage from phase detector 1 is fed to loop filter 1 which is a lead/lag filter, relatively slow and with good noise performance but narrow pull-in range.

The DC voltage from phase detector 2 is fed to loop filter 2 which is an active filter whose bandwidth is 20 times that of loop filter 1. This filter has poor noise performance but very large pull-in range.
Both filter outputs are fed to the loop switch circuit.

LOOP SWITCH

The loop switch is controlled by the lock detector. When the synthesizer is out of lock the control voltage from loop filter 2 is switched to the VCO and quickly tunes the VCO to the right frequency. The lock detector then indicates locked condition and the loop switch then switches loop filter 2 off and loop filter 1 on. The DC control voltage from loop filter 1 is then applied to the VCO. This configuration ensures a very short lock-in time and good noise performance in locked condition.

VOLTAGE CONTROLLED OSCILLATOR (VCO)

The active component of the VCO is a J-FET transistor in a Hartley oscillator configuration. The oscillator is tuned by varicaps across the frequency determining coil and a constant feedback throughout the tuning frequency band gives a nearly constant output power independently of the output frequency.

SPECIFICATIONS

Reference Divider Ratio

FS906:	2048
FS907:	2048
FS908:	1024
FS909:	1024
FS9010:	512
FS9011:	512

Reference Crystal Frequency

FS906:	10.24 MHz
FS907:	12.80 MHz
FS908:	10.24 MHz
FS909:	12.80 MHz
FS9010:	10.24 MHz
FS9011:	12.80 MHz

RF Output (J1 - J2)

Level:	0 dBm + 3 dB/-1 dB
Source impedance:	50 ohm
Load impedance:	50 ohm

Frequency Stability

±5 ppm

Channel Switching Time

FS906/FS907:

1 channel:	$\leq$ 10 ms
random:	$\leq$ 10 ms

FS908/FS909:

1 channel:	$\leq$ 5 ms
random:	$\leq$ 8 ms

FS9010/FS9011:

1 channel:	$\leq$ 4 ms
random:	$\leq$ 6 ms

Temperature Range

$-40^{o}C$ to $+85^{o}C$

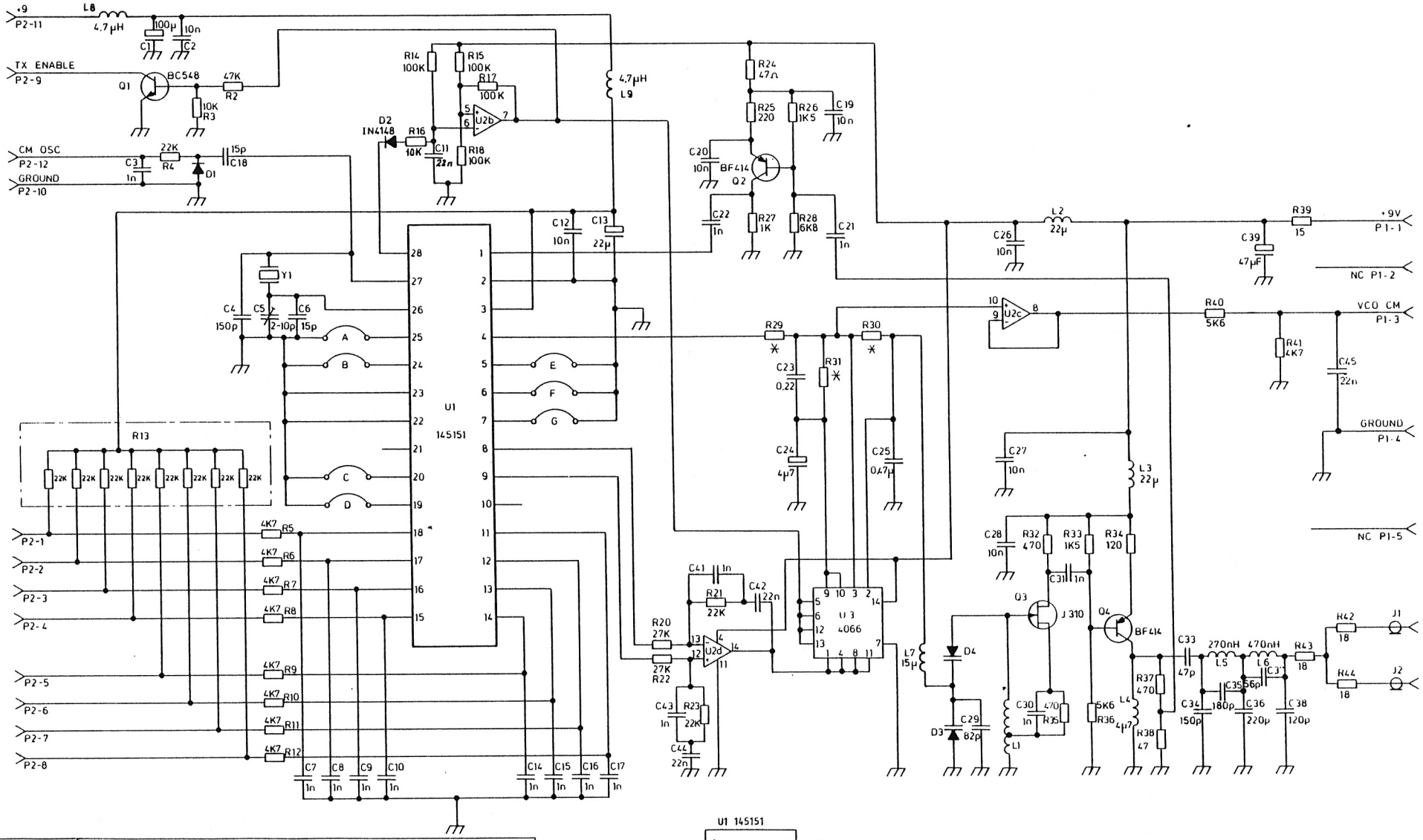

	* VALUE CHART.						
CODE NO.	UNIT	CHANNEL SPACING	PROGRAM STRAPPING	Y1	R29	R30	R31
L855536G1	FS906	5KHz	BDF	10,24	10K	390	1K2
L855536G2	FS907	6,25KHz	BCDF	12,800	10K	390	1K2
L855536G3	FS908	10KHz	ACEF	10,24	8K2	270	820
L855536G4	FS909	12,5KHz	ACDEF	12,800	8K2	270	820
L855536G5	FS910	20KHz	ABDG	10,24	5K6	180	560
L855536G6	FS911	25KHz	ABDG	12,800	5K6	180	560

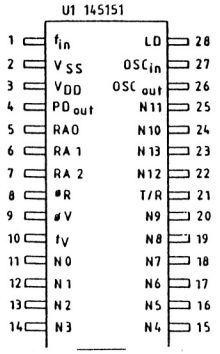

FREQUENCY SYNTHESIZER FS90XX

REV.A

D403.868 / 3

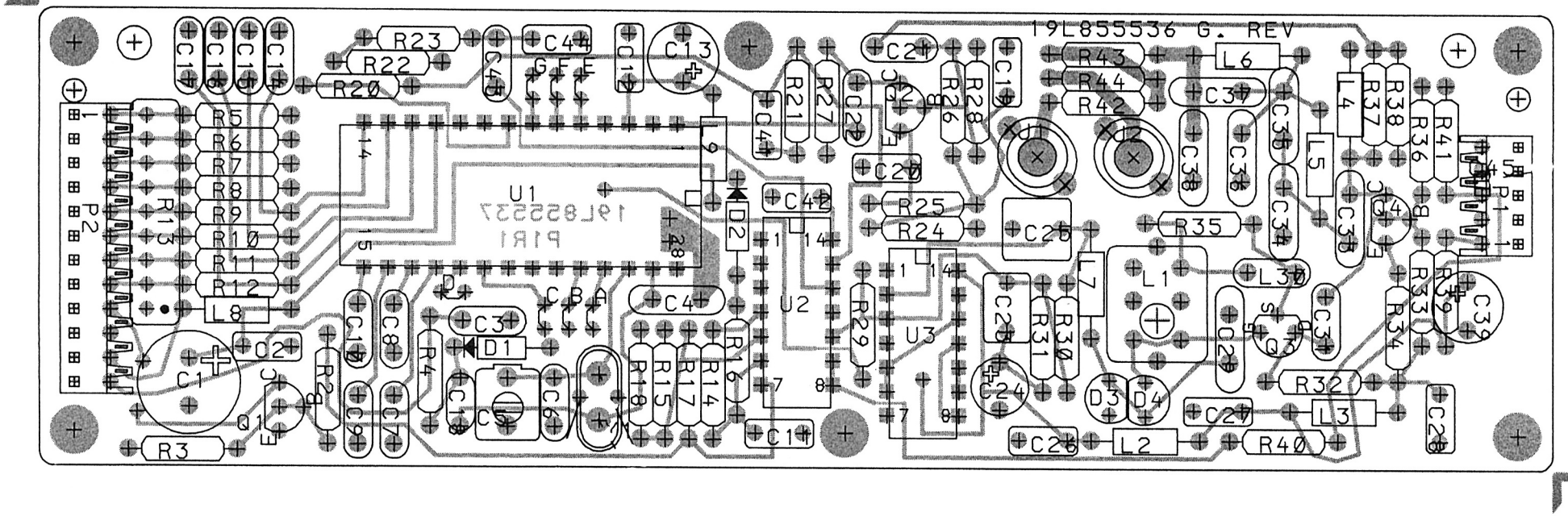

FREQUENCY SYNTHESIZER FS90XX
COMPONENT LAYOUT
REV.1 D403.671/4

Pos.	Code No.	Description	Qt.
C000	J707438P18	CAP,CER,CL2 22N , 10%	1
C001	J706005P4	CAP,ELECT 100U , 16V	1
C002	J707412P3	CAP,PYES 10N , 10%	1
C003	A700233P7	CAP,CER,CL2 1N , 20%	1
C004	A700235P27	CAP,CER,N750 150P , 5%	1
C005	J706003P1	CAP,VAR,FILM 1.8/10 PF	1
C006	A700235P15	CAP,CER,N150 15P , 5%	1
C007	A700233P7	CAP,CER,CL2 1N , 20%	1
C008	A700233P7	CAP,CER,CL2 1N , 20%	1
C009	A700233P7	CAP,CER,CL2 1N , 20%	1
C010	A700233P7	CAP,CER,CL2 1N , 20%	1
C011	J707412P5	CAP,PYES 22N , 10%	1
C012	J707412P3	CAP,PYES 10N , 10%	1
C013	A701534P8	CAP,TA,SOL 22U , 16V	1
C014	A700233P7	CAP,CER,CL2 1N , 20%	1
C015	A700233P7	CAP,CER,CL2 1N , 20%	1
C016	A700233P7	CAP,CER,CL2 1N , 20%	1
C017	A700233P7	CAP,CER,CL2 1N , 20%	1
C018	A700235P15	CAP,CER,N150 15P , 5%	1
C019	J707412P3	CAP,PYES 10N , 10%	1
C020	J707412P3	CAP,PYES 10N , 10%	1
C021	A700233P7	CAP,CER,CL2 1N , 20%	1
C022	A700233P7	CAP,CER,CL2 1N , 20%	1
C023	J707412P11	CAP,PYES 220N , 10%	1
C024	A701534P6	CAP,TA,SOL 4U7 , 35V	1
C025	J707412P13	CAP,PYES 470N , 10%	1
C026	J707412P3	CAP,PYES 10N , 10%	1
C027	J707412P3	CAP,PYES 10N , 10%	1
C028	J707412P3	CAP,PYES 10N , 10%	1
C029	A700235P24	CAP,CER,N150 82P , 5%	1
C030	A700233P7	CAP,CER,CL2 1N , 20%	1
C031	A700233P7	CAP,CER,CL2 1N , 20%	1
C033	A700235P21	CAP,CER,N150 47P , 5%	1
C034	A700235P27	CAP,CER,N750 150P , 5%	1
C035	A700235P28	CAP,CER,N750 180P , 5%	1

Pos.	Code No.	Description	Qt.
C036	A700235P29	CAP,CER,N750 220P , 5%	1
C037	A700235P22	CAP,CER,N150 56P , 5%	1
C038	A700235P26	CAP,CER,N750 120P , 5%	1
C039	J707444P17	CAP,TA,SOL 47U , 10V	1
C041	A700233P7	CAP,CER,CL2 1N , 20%	1
C042	J707412P5	CAP,PYES 22N , 10%	1
C043	A700233P7	CAP,CER,CL2 1N , 20%	1
C044	J707412P5	CAP,PYES 22N , 10%	1
D001	A700028P1	DIO,SI,SIG 1N4148	1
D002	A700028P1	DIO,SI,SIG 1N4148	1
D003	A701276P2	DIO,SI,CAP MVAM 108	1
D004	A701276P2	DIO,SI,CAP MVAM 108	1
J001	A700171P2	CONN,PWB,FEM	1
J002	A700171P2	CONN,PWB,FEM	1
L001	J708224G1	COIL ASM	1
L002	A700024P29	COIL,RF,FIX 22UH , 10%	1
L003	A700024P29	COIL,RF,FIX 22UH , 10%	1
L004	A700024P21	COIL,RF,FIX 4.7UH , 10%	1
L005	A700024P6	COIL,RF,FIX 0.27UH, 10%	1
L006	A700024P9	COIL,RF,FIX 0.47UH, 10%	1
L007	A700024P27	COIL,RF,FIX 15UH , 10%	1
L008	A700024P21	COIL,RF,FIX 4.7UH , 10%	1
L009	A700024P21	COIL,RF,FIX 4.7UH , 10%	1
P001	A700041P4	CONN,PWB,FEM 05-CKT	1
P002	A700041P11	CONN,PWB,FEM 12-CKT	1
Q001	J707511P1	TSTR,NPN,SI BC 548A/B	1
Q002	J706264P1	TSTR,PNP,SI BF 414	1
Q003	A700060P2	TSTR,JFET,SI J 310	1
Q004	J706264P1	TSTR,PNP,SI BF 414	1
R002	A700019P57	RES,DEPC,1/4W 47K , 5%	1
R003	A700019P49	RES,DEPC,1/4W 10K , 5%	1
R004	A700019P53	RES,DEPC,1/4W 22K , 5%	1
R005	A700019P45	RES,DEPC,1/4W 4K7 , 5%	1
R006	A700019P45	RES,DEPC,1/4W 4K7 , 5%	1
R007	A700019P45	RES,DEPC,1/4W 4K7 , 5%	1

Pos.	Code No.	Description	Qt.
R008	A700019P45	RES,DEPC,1/4W 4K7 , 5%	1
R009	A700019P45	RES,DEPC,1/4W 4K7 , 5%	1
R010	A700019P45	RES,DEPC,1/4W 4K7 , 5%	1
R011	A700019P45	RES,DEPC,1/4W 4K7 , 5%	1
R012	A700019P45	RES,DEPC,1/4W 4K7 , 5%	1
R013	J706216P6	RES,NETW 8X 22K , 5%	1
R014	A700019P61	RES,DEPC,1/4W 100K , 5%	1
R015	A700019P61	RES,DEPC,1/4W 100K , 5%	1
R016	A700019P49	RES,DEPC,1/4W 10K , 5%	1
R017	A700019P61	RES,DEPC,1/4W 100K , 5%	1
R018	A700019P61	RES,DEPC,1/4W 100K , 5%	1
R020	A700019P54	RES,DEPC,1/4W 27K , 5%	1
R021	A700019P53	RES,DEPC,1/4W 22K , 5%	1
R022	A700019P54	RES,DEPC,1/4W 27K , 5%	1
R023	A700019P53	RES,DEPC,1/4W 22K , 5%	1
R024	A700019P21	RES,DEPC,1/4W 47R , 5%	1
R025	A700019P29	RES,DEPC,1/4W 220R , 5%	1
R026	A700019P39	RES,DEPC,1/4W 1K5 , 5%	1
R027	A700019P37	RES,DEPC,1/4W 1K0 , 5%	1
R028	A700019P47	RES,DEPC,1/4W 6K8 , 5%	1
R029	A700019P49	RES,DEPC,1/4W 10K , 5% **G1/G2**	1
R029	A700019P48	RES,DEPC,1/4W 8K2 , 5% **G3/G4**	1
R029	A700019P46	RES,DEPC,1/4W 5K6 , 5% **G5/G6**	1
R030	A700019P32	RES,DEPC,1/4W 390R , 5% **G1/G2**	1
R030	A700019P30	RES,DEPC,1/4W 270R , 5% **G3/G4**	1
R030	A700019P28	RES,DEPC,1/4W 180R , 5% **G5/G6**	1
R031	A700019P38	RES,DEPC,1/4W 1K2 , 5% **G1/G2**	1
R031	A700019P36	RES,DEPC,1/4W 820 , 5% **G3/G4**	1
R031	A700019P34	RES,DEPC,1/4W 560 , 5% **G5/G6**	1
R032	A700019P33	RES,DEPC,1/4W 470R , 5%	1
R033	A700019P39	RES,DEPC,1/4W 1K5 , 5%	1
R034	A700019P26	RES,DEPC,1/4W 120R , 5%	1
R035	A700019P33	RES,DEPC,1/4W 470R , 5%	1
R036	A700019P46	RES,DEPC,1/4W 5K6 , 5%	1
R037	A700019P33	RES,DEPC,1/4W 470R , 5%	1
R038	A700019P21	RES,DEPC,1/4W 47R , 5%	1

Pos.	Code No.	Description	Qt.
R039	A700019P15	RES,DEPC,1/4W 15R , 5%	1
R040	A700019P46	RES,DEPC,1/4W 5K6 , 5%	1
R041	A700019P45	RES,DEPC,1/4W 4K7 , 5%	1
R042	A700019P16	RES,DEPC,1/4W 18R , 5%	1
R043	A700019P16	RES,DEPC,1/4W 18R , 5%	1
R044	A700019P16	RES,DEPC,1/4W 18R , 5%	1
U001	J708256P1	IC,PLL,SYN 145151	1
U002	J708164P1	IC,LIN,OP-AMP TL074	1
U003	A700029P44	IC,DIG,SW 4066	1
Y001	J707567P8	CRYSTAL UNIT 10.2400MHZ **G1/G3/G5**	1
Y001	J707567P6	CRYSTAL UNIT 12.8000MHZ **G2/G4/G6**	1
0002	L855537P1R0	BD PW	1
		NON ELECTRICAL PARTS	
	J706232P1	CONN JACK	2
	J706275P1	SPG XTAL	1

IA907/IA908/IA909

IF AMPLIFIER AND DETECTOR

The Intermediate Frequency module amplifies the 21.4 MHz signal convert it to 455 kHz, amplifies this signal and detects the modulation. The module accepts a narrowband FM signal and delivers an audio output from DC to 3000 Hz into a load of 2000 ohms or greater.

IA907 is used for 25 kHz channel spacing.
IA908 is used for 20 kHz channel spacing.
IA909 is used for 12.5 kHz channel spacing.

The required selectivity is obtained by two crystal filter blocks, one on 21.4 MHz and one on 455 kHz.

The two filters and the amplifying stages provide the necessary gain and selectivity distribution and set the noise figure. They also protect against desensitization and intermodulation.

The input amplifier after the crystal filter is a dual-gate FET with 15-20 dB gain and it overcomes the noise figure of the following stage and stabilizes the load on the crystal filter.
The input amplifier is followed by an integrated circuit which includes oscillator, mixer, 455 kHz amplifier, discriminator and AF amplifier.
The mixer crystal frequency is either:

21.4 MHz + 0.455 MHz= 21.855 MHz
or 21.4 MHz - 0.455 MHz= 20.945 MHz

The discriminator is a quadrature type with a tuned LC-circuit as the phasing element.
The audio output is DC coupled through an emitter follower to provide the AF response which is required in some signalling applications.

A circuit for delecting the signal strenght is included in the module and is used for adjustment and measurements.

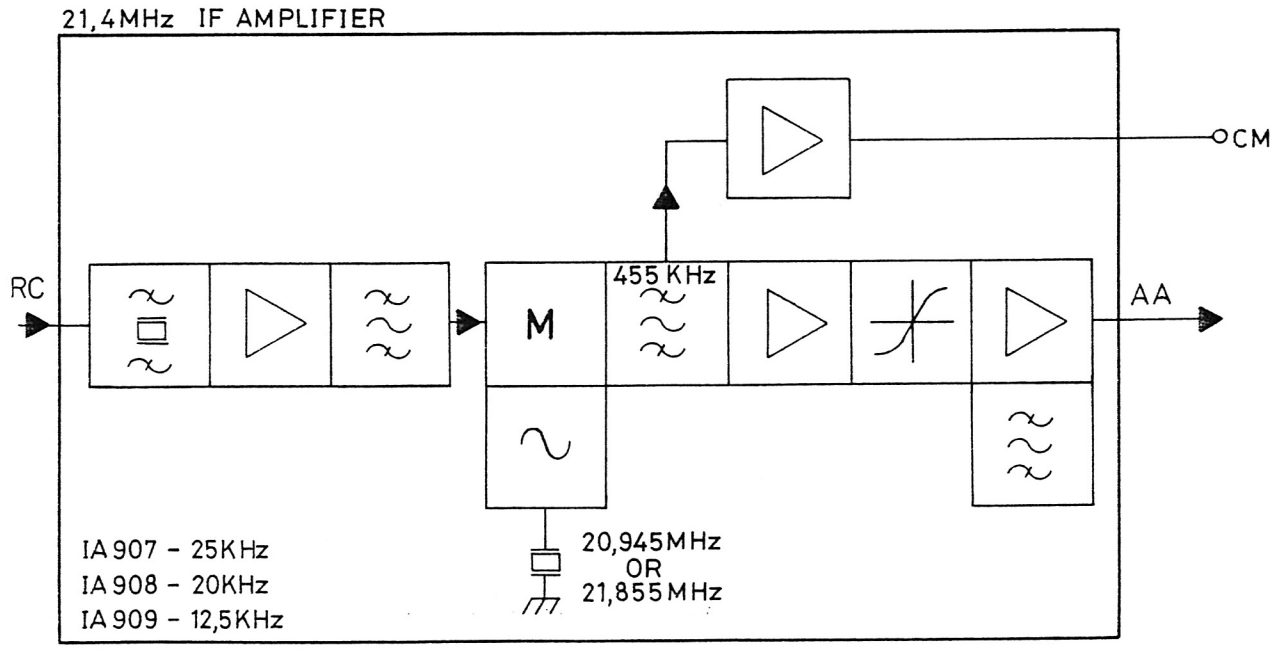

TECHNICAL SPECIFICATIONS

Input frequency
21.4 MHz

Nominal input impedance
1600 ohm

Source impedance
1600 ohm ±5%

AF output impedance
<100 ohm

Minimum external load
1000 ohm

Power supply voltage
9 V ±5%

Current consumption
<15 mA

Sensitivity, 12 dB SINAD
0.50 uV max., emf, 50 ohm input

Static selectivity

	IA907	IA908	IA909
6 dB	>±7.5 kHz	>±6 kHz	>±3.75 kHz
80 dB			≤±11 kHz
100 dB	≤±22 kH	≤±17.5 kHz	

Discriminator bandwidth
IA907/908 ≥±10 kHz
IA909 ≥±7 kHz

AF output
for f_{mod} = 1 kHz
IA907:
300 mV ±2 dB (Δf= ±3 kHz)
IA908
300 mV ±2 dB (Δf= ±2.5 kHz)
IA909:
300 mV ±2 dB (Δf= ±1.5 kHz)

AF response
flat from 300 to 3000 Hz

Temperature range
-40°C to +85°C

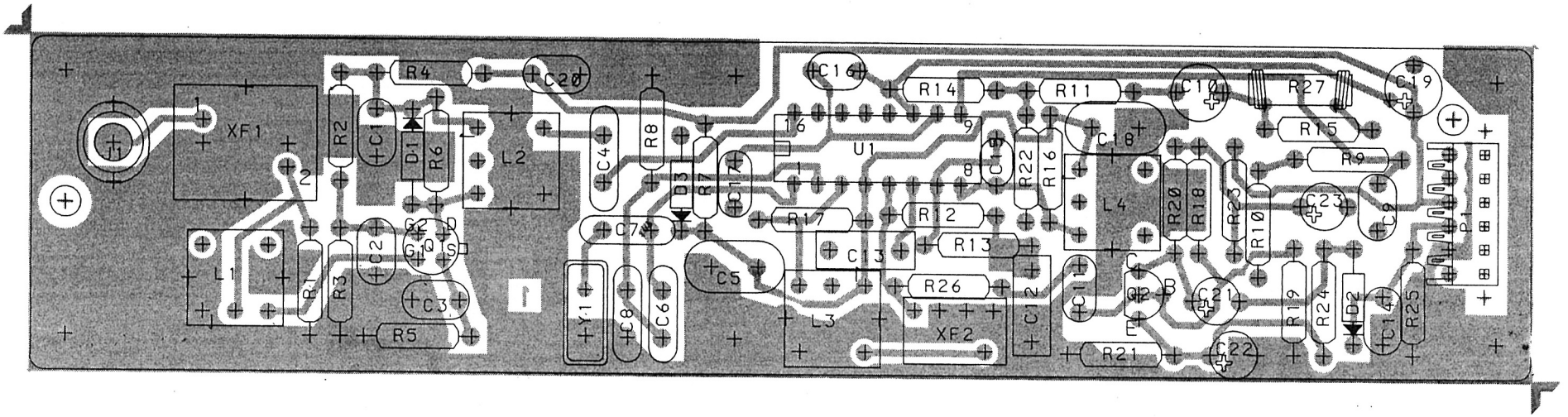

CODE NO. 19M905348	CHANNEL SPACING
G1 : IA907	25KHz
G2 : IA908	20KHz
G3 : IA909	12,5KHz

IF AMPLIFIER IA907/908/909
COMPONENT LAYOUT

D403.373

ITEM NUMBER DESCRIPTION

M905348G1 IA 907 25KHZ

P A R T S L I S T :

CIRCUIT POSITION	COMPONENT ITEM NUMBER	COMPONENT DESCRIPTION	QUANTITY TOTAL
C01	A700234P8	CAP PYES 15NF 63V	1
C02	A700234P8	CAP PYES 15NF 63V	1
C03	A700234P8	CAP PYES 15NF 63V	1
C04	A700235P29	CAP CER 220PF 50V	1
C05	A700234P11	CAP POLY 47NF 50V	1
C06	A700235P21	CAP CER 47PF 50V	1
C07	A700235P26	CAP CER 120PF 50V	1
C08	A700235P26	CAP CER 120PF 50V	1
C09	A700234P7	CAP POLY 10NF 50V	1
C10	A701534P7	CAP TA 10MF 16V	1
C11	A700233P9	CAP CER 2,2NF 50V	1
C12	A700004P2	CAP PYES 0.1MF 63V	1
C13	A700004P2	CAP PYES 0.1MF 63V	1
C14	A700234P7	CAP POLY 10NF 50V	1
C15	A700235P13	CAP CER 10PF 50V	1
C16	A700233P1	CAP CER 100PF 50V	1
C17	A700234P2	CAP POLY 1,5NF 50V	1
C18	A700234P11	CAP POLY 47NF 50V	1
C19	A701534P7	CAP TA 10MF 16V	1
C20	A700234P8	CAP PYES 15NF 63V	1
C21	A701534P4	CAP TA 1MF 35V	1
C22	A701534P4	CAP TA 1MF 35V	1
C23	A701534P4	CAP TA 1MF 35V	1
D1	A700028P1	DIO 1N4148	1
D2	A700028P1	DIO 1N4148	1
D3	J706270P1	DIO ZENR 5,6V 2% , 0,4W	1
* E1	* J707961P4	* FERR. CORE TOR.	1
J1	A700171P2	CONN RF PHONO	1
L1	J707342P1	RF COIL 21.4MHZ	1
L2	J707342P1	RF COIL 21.4MHZ	1
L3	J707343P1	RF COIL 455KHZ	1
L4	J707343P1	RF COIL 455KHZ	1
P1	A700041P5	CONN 6 PIN	1
Q1	A700074P1	MOS FET 3N205	1
Q2	J707511P1	TSTR SI BC548	1
R01	A700019P44	RES DEPOS 3,9KOHM	1
R02	A700019P53	RES DEPOS 22K 0,25W	1
R03	A700019P53	RES DEPOS 22K 0,25W	1
R04	A700019P25	RES DEPOS 100 OHM 0,25W	1
R05	A700019P29	RES DEPOS 220OHM 0,25W	1
R06	A700019P45	RES DEPOS 4.7K 0.25W	1

CIRCUIT POSITION	COMPONENT ITEM NUMBER	COMPONENT DESCRIPTION	QUANTITY TOTAL
R07	A700019P34	RES DEPOS 560OHM 0,25W	1
R08	A700019P55	RES DEPOS 33K 0.25W	1
R09	A700019P43	RES DEPOS 3.3K 0.25W	1
R10	A700019P37	RES DEPOS 1K 0,25W	1
R11	A700019P40	RES DEPOS 1,8K 0,25W	1
R12	A700019P45	RES DEPOS 4.7K 0.25W	1
R13	A700019P57	RES DEPOS 47K 0.25W	1
R14	A700019P56	RES DEPOS 39K OHM 0,25W	1
R15	A700019P46	RES DEPOS 5.6K 0.25W	1
R16	A700019P51	RES DEPOS 15K 0.25W	1
R17	A700019P53	RES DEPOS 22K 0,25W	1
R18	A700019P59	RES DEPOS 68K 0.25W	1
R19	A700019P51	RES DEPOS 15K 0.25W	1
R20	A700019P45	RES DEPOS 4.7K 0.25W	1
R21	A700019P37	RES DEPOS 1K 0,25W	1
R22	A700019P61	RES DEPOS 100K 0.25W	1
R23	A700019P25	RES DEPOS 100 OHM 0,25W	1
R24	A700019P49	RES DEPOS 10K 0.25W	1
R25	A700019P53	RES DEPOS 22K 0,25W	1
R26	A700019P45	RES DEPOS 4.7K 0.25W	1
R27	J707282P2	RES NTC 47K OHM 0,6W	1
U1	A701780P1	IC, LO-POW. FM/IF, MC3357P	1
XF1	A701196G12	XTAL-FLT. 21.4MHZ	1
XF2	J707308P1	CER FLT CFW 455D	1
Y1	J707309P1	X-TAL 20,945MHZ	1
003	J706804P1	WASH. INSUL.	1
* 010	* A701648P2	* SIL RUBB. SEALANT	0,002KG

ITEM NUMBER DESCRIPTION

M905348G2 IA 908 , 20KHZ CHANN.SPACING

P A R T S L I S T :

CIRCUIT POSITION	COMPONENT ITEM NUMBER	COMPONENT DESCRIPTION	QUANTITY
C01	A700234P8	CAP PYES 15NF 63V	1
C02	A700234P8	CAP PYES 15NF 63V	1
C03	A700234P8	CAP PYES 15NF 63V	1
C04	A700235P29	CAP CER 220PF 50V	1
C05	A700234P11	CAP POLY 47NF 50V	1
C06	A700235P21	CAP CER 47PF 50V	1
C07	A700235P26	CAP CER 120PF 50V	1
C08	A700235P26	CAP CER 120PF 50V	1
C09	A700234P7	CAP POLY 10NF 50V	1
C10	A701534P7	CAP TA 10MF 16V	1
C11	A700233P9	CAP CER 2,2NF 50V	1
C12	A700004P2	CAP PYES 0.1MF 63V	1
C13	A700004P2	CAP PYES 0.1MF 63V	1
C14	A700234P7	CAP POLY 10NF 50V	1
C15	A700235P13	CAP CER 10PF 50V	1
C16	A700233P1	CAP CER 100PF 50V	1
C17	A700234P2	CAP POLY 1,5NF 50V	1
C18	A700234P11	CAP POLY 47NF 50V	1
C19	A701534P7	CAP TA 10MF 16V	1
C20	A700234P8	CAP PYES 15NF 63V	1
C21	A701534P4	CAP TA 1MF 35V	1
C22	A701534P4	CAP TA 1MF 35V	1
C23	A701534P4	CAP TA 1MF 35V	1
D1	A700028P1	DIO 1N4148	1
D2	A700028P1	DIO 1N4148	1
D3	J706270P1	DIO ZENR 5,6V 2% , 0,4W	1
E1	J707961P4	FERR. CORE TOR.	1
J1	A700171P2	CONN RF PHONO	1
L1	J707342P1	RF COIL 21.4MHZ	1
L2	J707342P1	RF COIL 21.4MHZ	1
L3	J707343P1	RF COIL 455KHZ	1
L4	J707343P1	RF COIL 455KHZ	1
P1	A700041P5	CONN 6 PIN	1
Q1	A700074P1	MOS FET 3N205	1
Q2	J707511P1	TSTR SI BC548	1
R01	A700019P44	RES DEPOS 3,9KOHM	1
R02	A700019P53	RES DEPOS 22K 0,25W	1
R03	A700019P53	RES DEPOS 22K 0,25W	1
R04	A700019P25	RES DEPOS 100 OHM 0,25W	1
R05	A700019P29	RES DEPOS 220OHM 0,25W	1

CIRCUIT POSITION	COMPONENT ITEM NUMBER	COMPONENT DESCRIPTION	QUANTITY
R06	A700019P45	RES DEPOS 4.7K 0.25W	1
R07	A700019P34	RES DEPOS 560OHM 0,25W	1
R08	A700019P55	RES DEPOS 33K 0.25W	1
R09	A700019P41	RES DEPOS 2.2K 0.25W	1
R10	A700019P37	RES DEPOS 1K 0,25W	1
R11	A700019P40	RES DEPOS 1,8K 0,25W	1
R12	A700019P45	RES DEPOS 4.7K 0.25W	1
R13	A700019P57	RES DEPOS 47K 0.25W	1
R14	A700019P56	RES DEPOS 39K OHM 0,25W	1
R15	A700019P46	RES DEPOS 5.6K 0.25W	1
R16	A700019P51	RES DEPOS 15K 0.25W	1
R17	A700019P53	RES DEPOS 22K 0,25W	1
R18	A700019P59	RES DEPOS 68K 0.25W	1
R19	A700019P51	RES DEPOS 15K 0.25W	1
R20	A700019P45	RES DEPOS 4.7K 0.25W	1
R21	A700019P37	RES DEPOS 1K 0,25W	1
R22	A700019P61	RES DEPOS 100K 0.25W	1
R23	A700019P25	RES DEPOS 100 OHM 0,25W	1
R24	A700019P49	RES DEPOS 10K 0.25W	1
R25	A700019P53	RES DEPOS 22K 0,25W	1
R26	A700019P45	RES DEPOS 4.7K 0.25W	1
R27	J707282P2	RES NTC 47K OHM 0,6W	1
U1	A701780P1	IC , LO POW. FM/IF MC3357P	1
XF1	A701443G12	XTAL-FLT. 21.4MHZ	1
XF2	J707308P2	CER FLT CFW 455E	1
Y1	J707309P1	X-TAL 20,945MHZ	1
003	J706804P1	WASH. INSUL.	1
010	A701648P2	SIL RUBB. SEALANT	0.002KG

ITEM NUMBER DESCRIPTION

M905348G3 IA 909 , 12.5 KHZ CHANN. SPAC.

P A R T S L I S T :

CIRCUIT POSITION	COMPONENT ITEM NUMBER	COMPONENT DESCRIPTION	QUANTITY TOTAL
C01	A700234P8	CAP PYES 15NF 63V	1
C02	A700234P8	CAP PYES 15NF 63V	1
C03	A700234P8	CAP PYES 15NF 63V	1
C04	A700235P29	CAP CER 220PF 50V	1
C05	A700234P11	CAP POLY 47NF 50V	1
C06	A700235P21	CAP CER 47PF 50V	1
C07	A700235P26	CAP CER 120PF 50V	1
C08	A700235P26	CAP CER 120PF 50V	1
C09	A700234P7	CAP POLY 10NF 50V	1
C10	A701534P7	CAP TA 10MF 16V	1
C11	A700233P9	CAP CER 2,2NF 50V	1
C12	A700004P2	CAP PYES 0.1MF 63V	1
C13	A700004P2	CAP PYES 0.1MF 63V	1
C14	A700234P7	CAP POLY 10NF 50V	1
C15	A700235P13	CAP CER 10PF 50V	1
C16	A700233P1	CAP CER 100PF 50V	1
C17	A700234P2	CAP POLY 1,5NF 50V	1
C18	A700234P11	CAP POLY 47NF 50V	1
C19	A701534P7	CAP TA 10MF 16V	1
C20	A700234P8	CAP PYES 15NF 63V	1
C21	A701534P4	CAP TA 1MF 35V	1
C22	A701534P4	CAP TA 1MF 35V	1
C23	A701534P4	CAP TA 1MF 35V	1
D1	A700028P1	DIO 1N4148	1
D2	A700028P1	DIO 1N4148	1
D3	J706270P1	DIO ZENR 5,6V 2% , 0,4W	1
E1	J707961P4	FERR. CORE TOR.	1
J1	A700171P2	CONN RF PHONO	1
L1	J707342P1	RF COIL 21.4MHZ	1
L2	J707342P1	RF COIL 21.4MHZ	1
L3	J707343P1	RF COIL 455KHZ	1
L4	J707343P1	RF COIL 455KHZ	1
P1	A700041P5	CONN 6 PIN	1
Q1	A700074P1	MOS FET 3N205	1
Q2	J707511P1	TSTR SI BC548	1
R01	A700019P44	RES DEPOS 3,9KOHM	1
R02	A700019P53	RES DEPOS 22K 0,25W	1
R03	A700019P53	RES DEPOS 22K 0,25W	1
R04	A700019P25	RES DEPOS 100 OHM 0,25W	1
R05	A700019P29	RES DEPOS 220OHM 0,25W	1

CIRCUIT POSITION	COMPONENT ITEM NUMBER	COMPONENT DESCRIPTION	QUANTITY TOTAL
R06	A700019P45	RES DEPOS 4.7K 0.25W	1
R07	A700019P34	RES DEPOS 560OHM 0,25W	1
R08	A700019P55	RES DEPOS 33K 0.25W	1
R09	A700019P37	RES DEPOS 1.0K 0.25W	1
R10	A700019P37	RES DEPOS 1K 0,25W	1
R11	A700019P40	RES DEPOS 1,8K 0,25W	1
R12	A700019P45	RES DEPOS 4.7K 0.25W	1
R13	A700019P57	RES DEPOS 47K 0.25W	1
R14	A700019P56	RES DEPOS 39K OHM 0,25W	1
R15	A700019P46	RES DEPOS 5.6K 0.25W	1
R16	A700019P51	RES DEPOS 15K 0.25W	1
R17	A700019P53	RES DEPOS 22K 0,25W	1
R18	A700019P59	RES DEPOS 68K 0.25W	1
R19	A700019P51	RES DEPOS 15K 0.25W	1
R20	A700019P45	RES DEPOS 4.7K 0.25W	1
R21	A700019P37	RES DEPOS 1K 0,25W	1
R22	A700019P61	RES DEPOS 100K 0.25W	1
R23	A700019P25	RES DEPOS 100 OHM 0,25W	1
R24	A700019P49	RES DEPOS 10K 0.25W	1
R25	A700019P53	RES DEPOS 22K 0,25W	1
R26	A700019P45	RES DEPOS 4.7K 0.25W	1
R27	J707282P2	RES NTC 47K OHM 0,6W	1
U1	A701780P1	IC , LO POW. FM/IF MC3357P	1
XF1	A701523G12	XTAL-FLT. 21.4MHZ	1
XF2	J707308P3	CER FLT CFW 455F	1
Y1	J707309P1	X-TAL 20,945MHZ	1
003	J706804P1	WASH. INSUL.	1
010	A701648P2	SIL RUBB. SEALANT	1

IA9012, IA9013, IA9014

IF-AMPLIFIER

FUNCTIONAL DESCRIPTION

The module operates at 21.4 MHz input, which is converted to 100 kHz. It provides the receiver IF gain, selectivity, limiting, FM detection, and RSSI detection.

The channel spacing for the module IA9012 is 25 kHz, module IA9013 20 kHz, and module IA9014 12.5 kHz.

The only difference between the 3 bands is the x-tal filter and R23 and R24.

CIRCUIT DESCRIPTION

The input signal is amplified and fed to the crystal filter, which is an 8 pole monolithic filter providing the required selectivity. The second amplifier provides gain to overcome the noise figure of the following mixer.

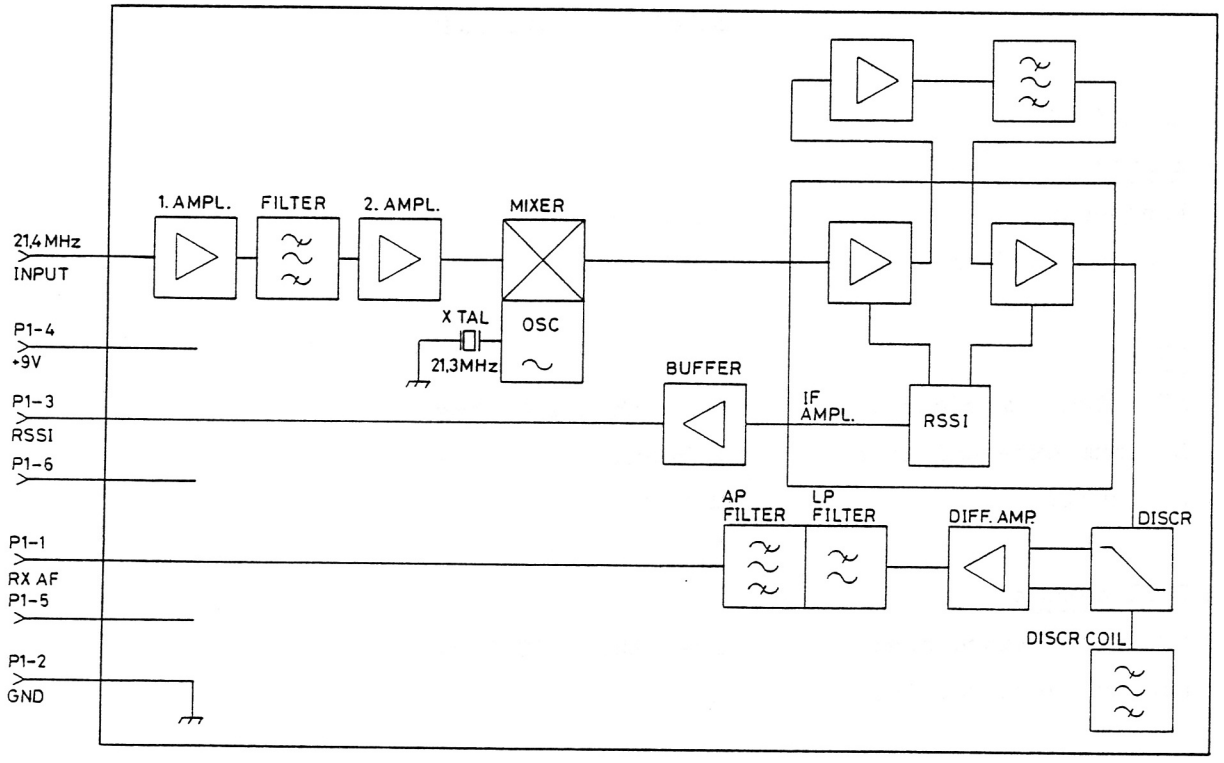

BLOCK DIAGRAM IA 9012/13/14

D404597

The two amplifiers before and after the crystal filter provide a stable matching to the filter.
The 2. amplifier is followed by an integrated mixer with an on-chip oscillator. The mixer converts the 21.4 MHz input to 100 kHz. The mixer output is fed to the IF amplifier. The IF amplifier contains two amplifiers which are connected via an amplifier and a low Q bandpass filter.
The discriminator is a quadrature type built around a transistor array with two differentially coupled amplifiers. The balanced outputs from the discriminator are converted to unbalanced signal with reference to +4.5 V in a differential amplfier. The audio signal passes a low pass and an all pass filter which together give a constant group delay at frequencies up to 3 kHz.
The output voltage is about 0.3 Volt RMS, and R23 and R24 is changed for different bandwith.
The IF amplifier contains an RSSI (Receiver Signal Strength Indicator) which delivers a current of approximately 10 uV per 20 dB input signal level. The RSSI is temperature compensated with a diode and a PTC resistor. The RSSI is buffered with a voltage follower.

SPECIFICATION

INTERFACE

Input:

Frequency:	21.4 MHz
Source impedance:	1600 Ohms

RX AF

AF output impedance:	less than 100 Ohms
Minimum external load:	2 kOhms
DC level:	4.5 V

RSSI output

DC output impedance:	less than 100 Ohms
Mimimum external load:	1 kOhm

Power supply voltage

9 V (±5%)

Consumption

less than 40 mA

PERFORMANCE

Sensitivity

20 dB psophometric

(50 Ohm input) 0.6 uV EMF max.

Static selectivity

	IA9012	IA9013	IA9014
	25 kHz	20 kHz	12.5 kHz
Bandwith, 3 dB greather than	±7.5 kHz	±6 kHz	±3.75 kHz
Bandwith, 65 dB less than	±17.5 kHz	±4 dB	±8.75 kHz
Bandwith, 90 dB less than	±25.0 kHz	±20 kHz	±12.5 kHz

Group delay

Distortion:

300 - 3000 less than 10 uS

Stability

2600 Hz less than ±0.75 us (level dependent)

2600 Hz less than ± 5 us (level dependent)

Discriminator bandwith

greater than ±6 kHz

AF output (f mod. 1 kHz)

300 mV ±2 dB at 60% of max. f

AF Response

100 - 2000 Hz ±0.5 dB

2000 - 3000 Hz +0.5 - 1.0 dB

Harmonic distortion

f mod. 1 kHz at 60% of max. f: less than 5%

Hum and noise

Rel. to f mod 1 kHz, and 60% of max. f weighted by psophometric filter

less than/equal to -60 dB

RSSI

Range (with RC9061) 20 dB SINAD: -2 - +45 dB

Temperature stability: ±3 dB

ENVIRONMENTAL SPECIFICATIONS

Temperature range

-25 to +75 deg. C

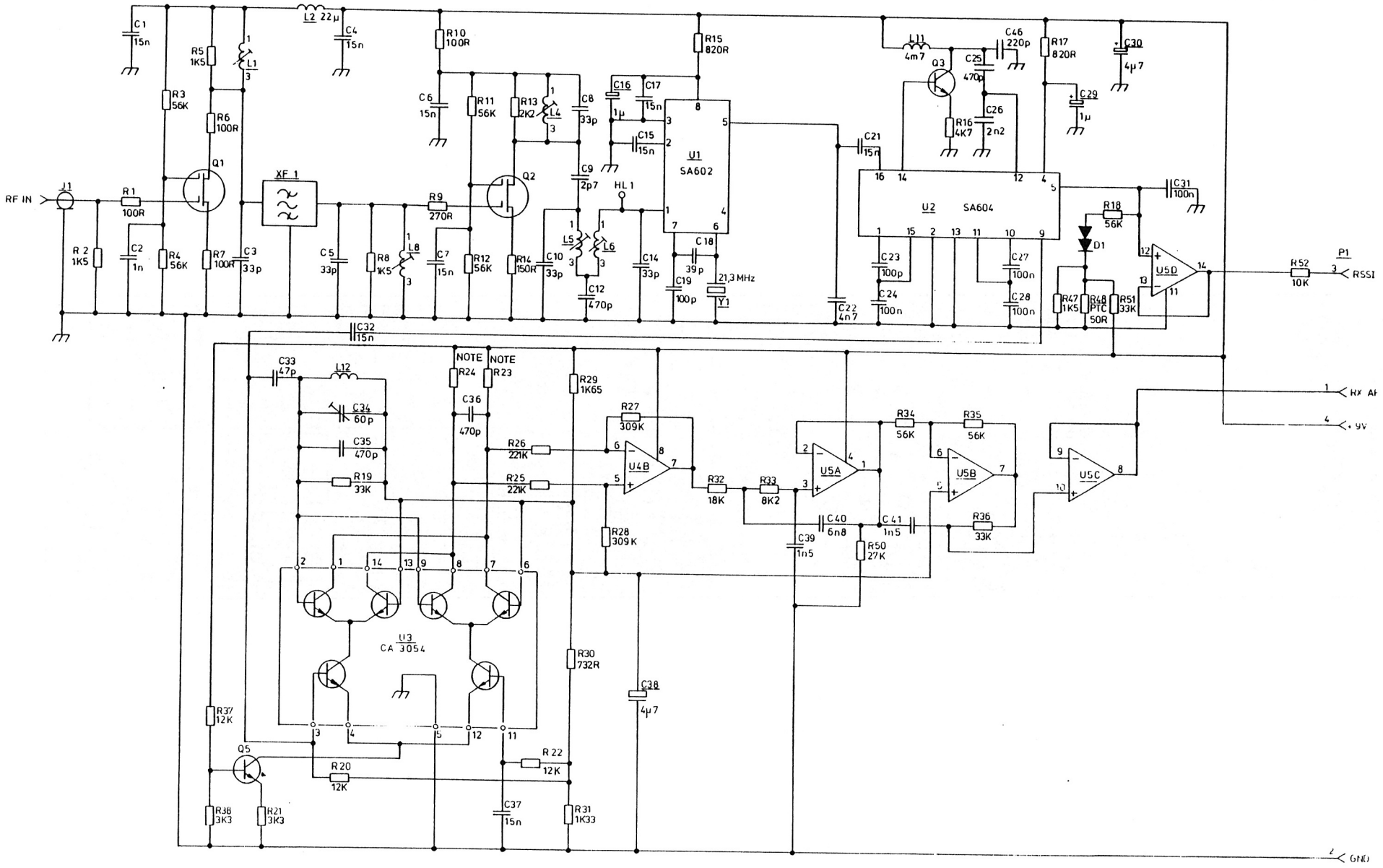

NOTE:
R23 & R24 = 3K3 FOR IA9012 (25 KHz) CODE NO. L855890G2
R23 & R24 = 4K7 FOR IA9013 (20 KHz) CODE NO. L855890G3
R23 & R24 = 6K8 FOR IA9014 (12.5 KHz) CODE NO. L855890G4

NOTE:
COMPONENTS MARKED CXXX ARE PLACED ON NO SOLDER SIDE

IF AMPLIFIER IA9012/13/14

D404.601/2

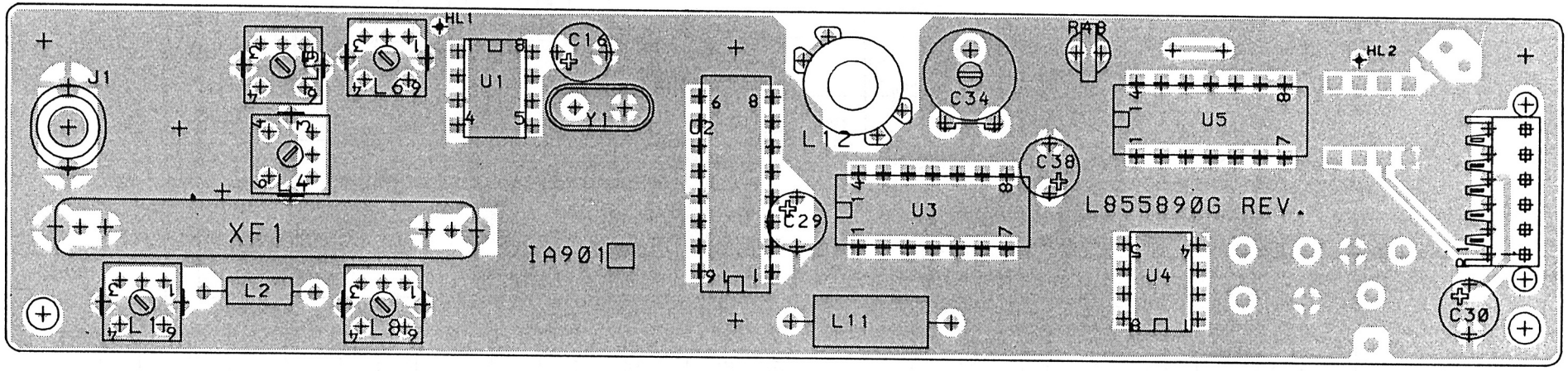

IF AMPLIFIER IA9012/13/14
COMPONENT LAYOUT-COMPONENT SIDE
CODE NO. L855890G2,G3,G4 REV.1 **D404.602/2**

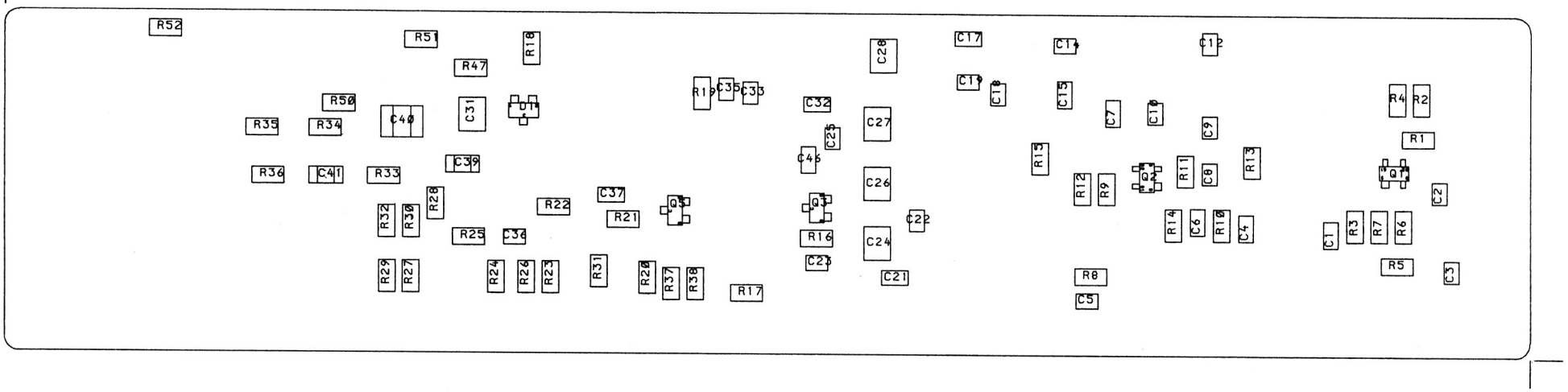

IF AMPLIFIER IA9012/13/14
COMPONENT LAYOUT-CHIP SIDE

CODE NO. L855890G2,G3,G4 REV.1 **D404.603/2**

DATE: 10/20/1987

Pos	Code No	Description	Qt
C001	J707438P16	CAP CER CL2 15N 10%	1
C002	J707438P5	CAP CER CL2 1N 10%	1
C003	J707436P37	CAP CER NPO 33P 5%	1
C004	J707438P16	CAP CER CL2 15N 10%	1
C005	J707436P37	CAP CER NPO 33P 5%	1
C006	J707438P16	CAP CER CL2 15N 10%	1
C007	J707438P16	CAP CER CL2 15N 10%	1
C008	J707436P37	CAP CER NPO 33P 5%	1
C009	J707436P6	CAP CER NPO 2P7 .25P	1
C010	J707436P37	CAP CER NPO 33P 5%	1
C012	J707436P77	CAP CER NPO 470P 5%	1
C014	J707436P37	CAP CER NPO 33P 5%	1
C015	J707438P16	CAP CER CL2 15N 10%	1
C016	J707444P4	CAP TA SOL 1U 35V	1
C017	J707438P16	CAP CER CL2 15N 10%	1
C018	J707436P41	CAP CER NPO 39P 5%	1
C019	J707436P61	CAP CER NPO 100P 5%	1
C021	J707438P16	CAP CER CL2 15N 10%	1
C022	J707438P10	CAP CER CL2 4N7 10%	1
C023	J707436P61	CAP CER NPO 100P 5%	1
C024	J707438P26	CAP CER CL2 100N 10%	1
C025	J707436P77	CAP CER NPO 470P 5%	1
C026	J707436P93	CAP CER NPO 2N2 5%	1
C027	J707438P26	CAP CER CL2 100N 10%	1
C028	J707438P26	CAP CER CL2 100N 10%	1
C029	J707444P4	CAP TA SOL 1U 35V	1
C030	J707444P6	CAP TA SOL 4U7 35V	1
C031	J707438P26	CAP CER CL2 100N 10%	1
C032	J707438P16	CAP CER CL2 15N 10%	1
C033	J707436P45	CAP CER NPO 47P 5%	1
C034	J706080P1	CAP VAR FILM 5.0/57 PF	1
C035	J707363P7	CAP CER NPO 470P 2%	1
C036	J707436P77	CAP CER NPO 470P 5%	1
C037	J707438P16	CAP CER CL2 15N 10%	1
C038	J707444P6	CAP TA SOL 4U7 35V	1
C039	J707436P89	CAP CER NPO 1N5 5%	1

Pos	Code No	Description	Qt
C040	J707349P9	CAP CER NPO 6N8 2%	1
C041	J707436P89	CAP CER NPO 1N5 5%	1
C046	J707436P69	CAP CER NPO 220P 5%	1
D001	J707389P1	DIO SI SIG BAV 99	1
J001	A700171P2	CONN PWB FEM	1
L001	K805800G1	COIL ASM	1
L002	A700024P29	COIL RF FIX 22UH 10%	1
L004	J708428P1	COIL RF VAR 45 MHZ	1
L005	J708428P1	COIL RF VAR 45 MHZ	1
L006	J708428P1	COIL RF VAR 45 MHZ	1
L008	J708428P1	COIL RF VAR 45 MHZ	1
L011	J707174P1	COIL RF FIX 4700UH 10%	1
L012	K805798G1	COIL ASM	1
P001	A700041P5	CONN PWB FEM06-CKT	1
Q001	J707433P1	TSTR MFET SI BF 989	1
Q002	J707433P1	TSTR MFET SI BF 989	1
Q003	J707386P1	TSTR NPN SI BCW 32	1
Q005	J707386P1	TSTR NPN SI BCW 32	1
R001	J707385P101	RES MFLM 1/8W 100R 5%	1
R002	J707385P152	RES MFLM 1/8W 1K5 5%	1
R003	J707385P563	RES MFLM 1/8W 56K 5%	1
R004	J707385P563	RES MFLM 1/8W 56K 5%	1
R005	J707385P152	RES MFLM 1/8W 1K5 5%	1
R006	J707385P101	RES MFLM 1/8W 100R 5%	1
R007	J707385P101	RES MFLM 1/8W 100R 5%	1
R008	J707385P152	RES MFLM 1/8W 1K5 5%	1
R009	J707385P271	RES MFLM 1/8W 270R 5%	1
R010	J707385P101	RES MFLM 1/8W 100R 5%	1
R011	J707385P563	RES MFLM 1/8W 56K 5%	1
R012	J707385P563	RES MFLM 1/8W 56K 5%	1
R013	J707385P222	RES MFLM 1/8W 2K2 5%	1
R014	J707385P151	RES MFLM 1/8W 150R 5%	1
R015	J707385P821	RES MFLM 1/8W 820R 5%	1
R016	J707385P472	RES MFLM 1/8W 4K7 5%	1
R017	J707385P821	RES MFLM 1/8W 820R 5%	1
R018	J707385P563	RES MFLM 1/8W 56K 5%	1

DATE: 10/20/1987

Pos	Code No	Description	Qt
R019	J707385P333	RES MFLM 1/8W 33K 5%	1
R020	J707385P123	RES MFLM 1/8W 12K 5%	1
R021	J707385P332	RES MFLM 1/8W 3K3 5%	1
R022	J707385P123	RES MFLM 1/8W 12K 5%	1
R023	J709328P251	RES MFLM 1/8W 3K32 1% G2 ONLY	1
R023	J709328P266	RES MFLM 1/8W 4K75 1% G3 ONLY	1
R023	J709328P281	RES MFLM 1/8W 6K81 1% G4 ONLY	1
R024	J709328P251	RES MFLM 1/8W 3K32 1% G2 ONLY	1
R024	J709328P266	RES MFLM 1/8W 4K75 1% G3 ONLY	1
R024	J709328P281	RES MFLM 1/8W 6K81 1% G4 ONLY	1
R025	J709328P434	RES MFLM 1/8W 221K 1%	1
R026	J709328P434	RES MFLM 1/8W 221K 1%	1
R027	J709328P448	RES MFLM 1/8W 309K 1%	1
R028	J709328P448	RES MFLM 1/8W 309K 1%	1
R029	J709328P222	RES MFLM 1/8W 1K65 1%	1
R030	J709328P184	RES MFLM 1/8W 732R 1%	1
R031	J709328P213	RES MFLM 1/8W 1K33 1%	1
R032	J707385P183	RES MFLM 1/8W 18K 5%	1
R033	J707385P822	RES MFLM 1/8W 8K2 5%	1
R034	J707385P563	RES MFLM 1/8W 56K 5%	1
R035	J707385P563	RES MFLM 1/8W 56K 5%	1
R036	J707385P333	RES MFLM 1/8W 33K 5%	1
R037	J707385P123	RES MFLM 1/8W 12K 5%	1
R038	J707385P332	RES MFLM 1/8W 3K3 5%	1
R047	J707385P152	RES MFLM 1/8W 1K5 5%	1
R048	J706147P1	RES THERM PTC 50R 30%	1
R050	J707385P273	RES MFLM 1/8W 27K 5%	1
R051	J707385P333	RES MFLM 1/8W 33K 5%	1
R052	J707385P103	RES MFLM 1/8W 10K 5%	1
U001	J709575P1	IC LIN MIX 602	1
U002	J709576P1	IC LIN IF-AMP 604	1
U003	J709577P1	IC ARRAY TSTR CA 3054	1
U004	J709530P1	IC LIN OP-AMP 082	1
U005	A701789P3	IC LIN OP-AMP 224	1
XF01	J709578P1	FLTR CRY 21.4 +/-7.50KHZ G2 ONLY	1
XF01	J709578P2	FLTR CRY 21.4 +/-6.00KHZ G3 ONLY	1

Pos	Code No	Description	Qt
XF01	J709578P3	FLTR CRY 21.4 +/-3.75KHZ G4 ONLY	1
Y001	J707567P13	CRYSTAL UNIT 21.3000MHZ	1
	L855891P1R1	BD PW	1
		NON ELECTRONICAL PARTS	
	J706804P1	WASH INS CRYS FOR HC-25/U	1

JP9011/JP9015

INTERCONNECTION B0ARD

The interconnection board JP9011/JP9015 is a mother board for the transmitter modules in CQF9000 base stations and provides all modules interconnetions.

The board is furnished with connectors for the modules and connetors for the power supply and the interface.

The interconnection board is in both multiplier and synthesizer transmitters.

JP9011 is used in CQF911X, CQF933X and CQP977X.
JP9015 is used in CQF955X, CQF966X and CQF999X.

SPECIFICATIONS

Dimensions
112 x 262 mm

Temperature Range
$\div 40^{O}C$ to $+85^{O}C$

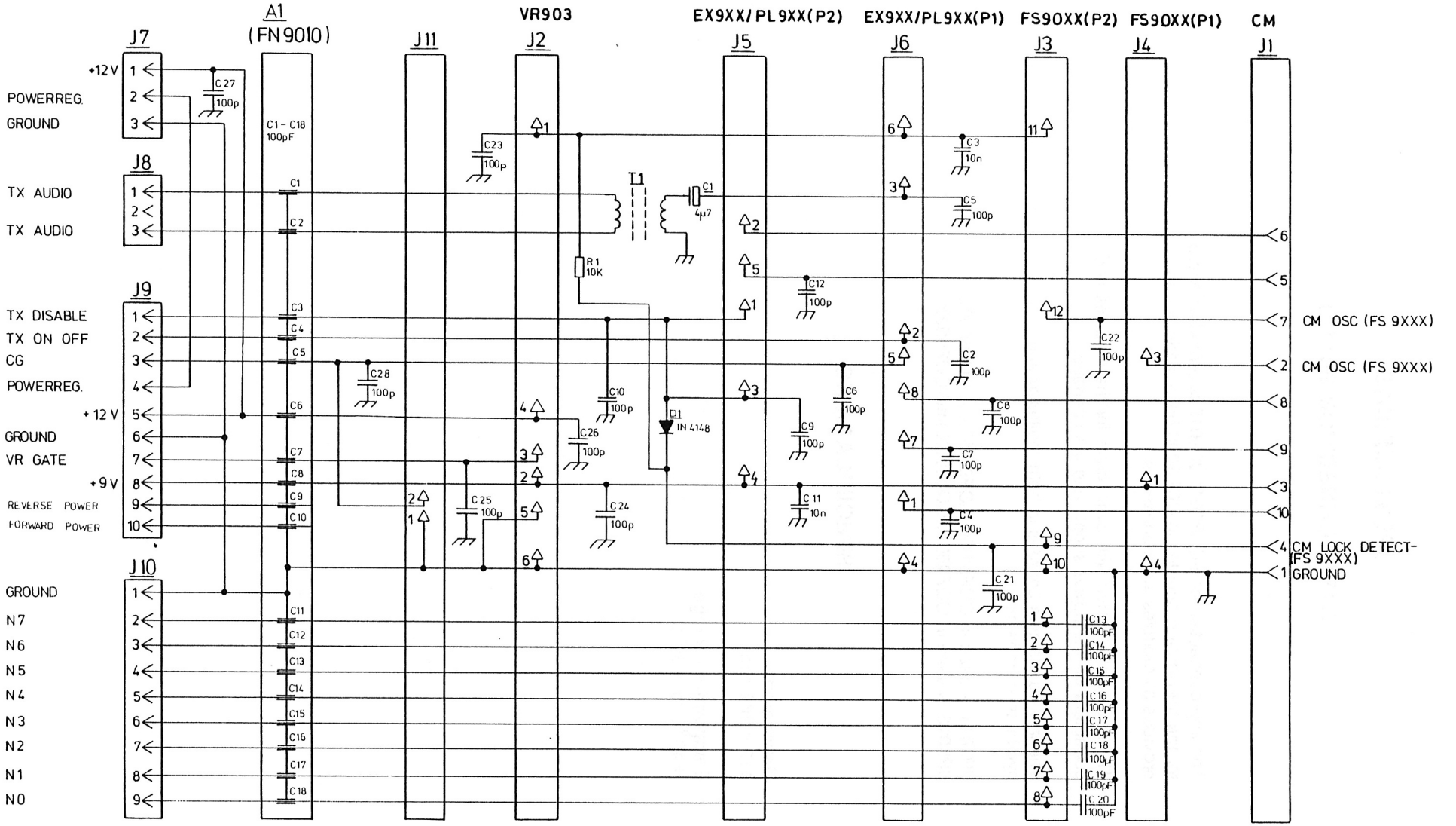

J1. CM					
PIN	5	6	8	9	10
EX931	BP1	BP2	NC	MIXER	OSC
EX932	NC	BP2	NC	NC	OSC
EX911	BP1	BP2	NC	MIXER	OSC
EX912	NC	BP2	NC	NC	OSC
EX961	NC	TRIBLER	NC	NC	OSC
PL952	TX STATUS	TUNE	FILTER	TRIPLER	OSC
PL961	TX STATUS	TUNE	FILTER	TRIPLER	OSC

COMPONENTS MARKED CXX ARE PLACED ON NON SOLDERING SIDE

TX JUNCTION PANEL JP9011

CODE NO. M905804G1 REV.B D403.856/3

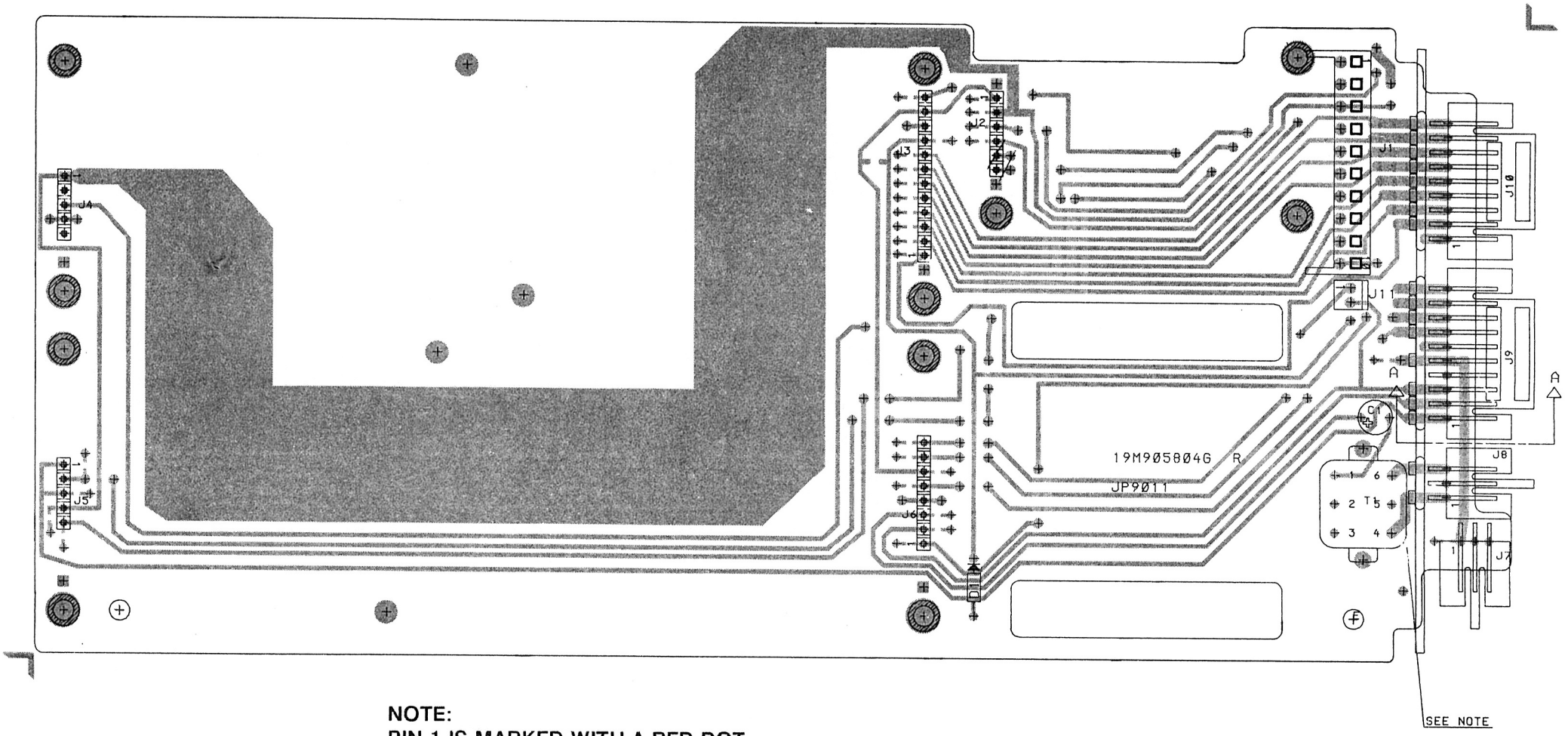

NOTE:
PIN 1 IS MARKED WITH A RED DOT.

TX JUNCTION PANEL JP9011
COMPONENT LAYOUT-COMPONENT SIDE
CODE NO. M905804G1 REV.2 D404.853

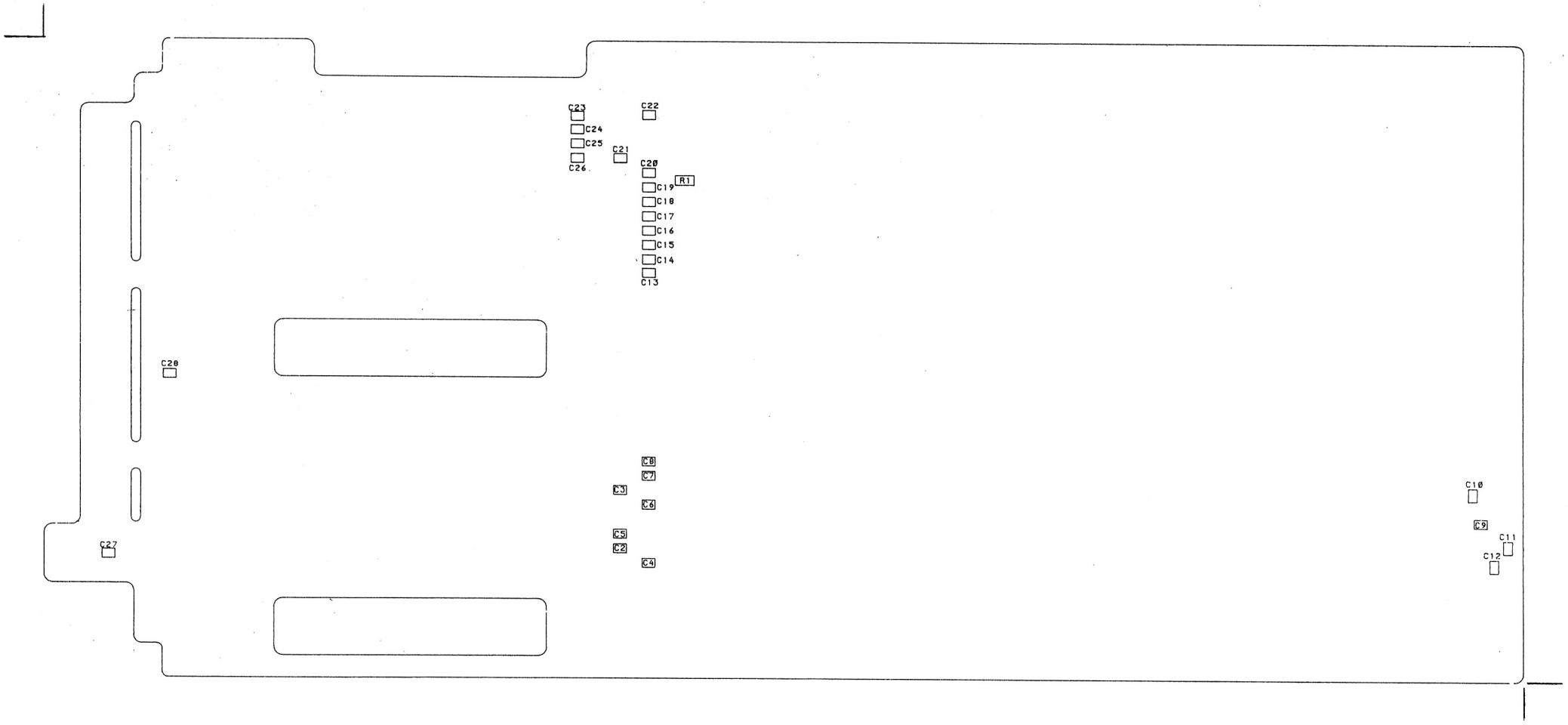

TX JUNCTION PANEL JP9011
COMPONENT LAYOUT-CHIP SIDE

CODE NO. M905804G1 REV.2 | **D404.854**

JP9012

INTERCONNECTION B0ARD

The interconnection board JP9012 is a mother board for the receiver modules in CQF9000 base stations and provides all modules interconnetions.

The board is furnished with connectors for the modules and connetors for the power supply and the interface.

The interconnection board is in both multiplier and synthesizer receivers.

SPECIFICATIONS

Dimensions
168 x 255 mm

Temperature Range
-40°C to +85°C

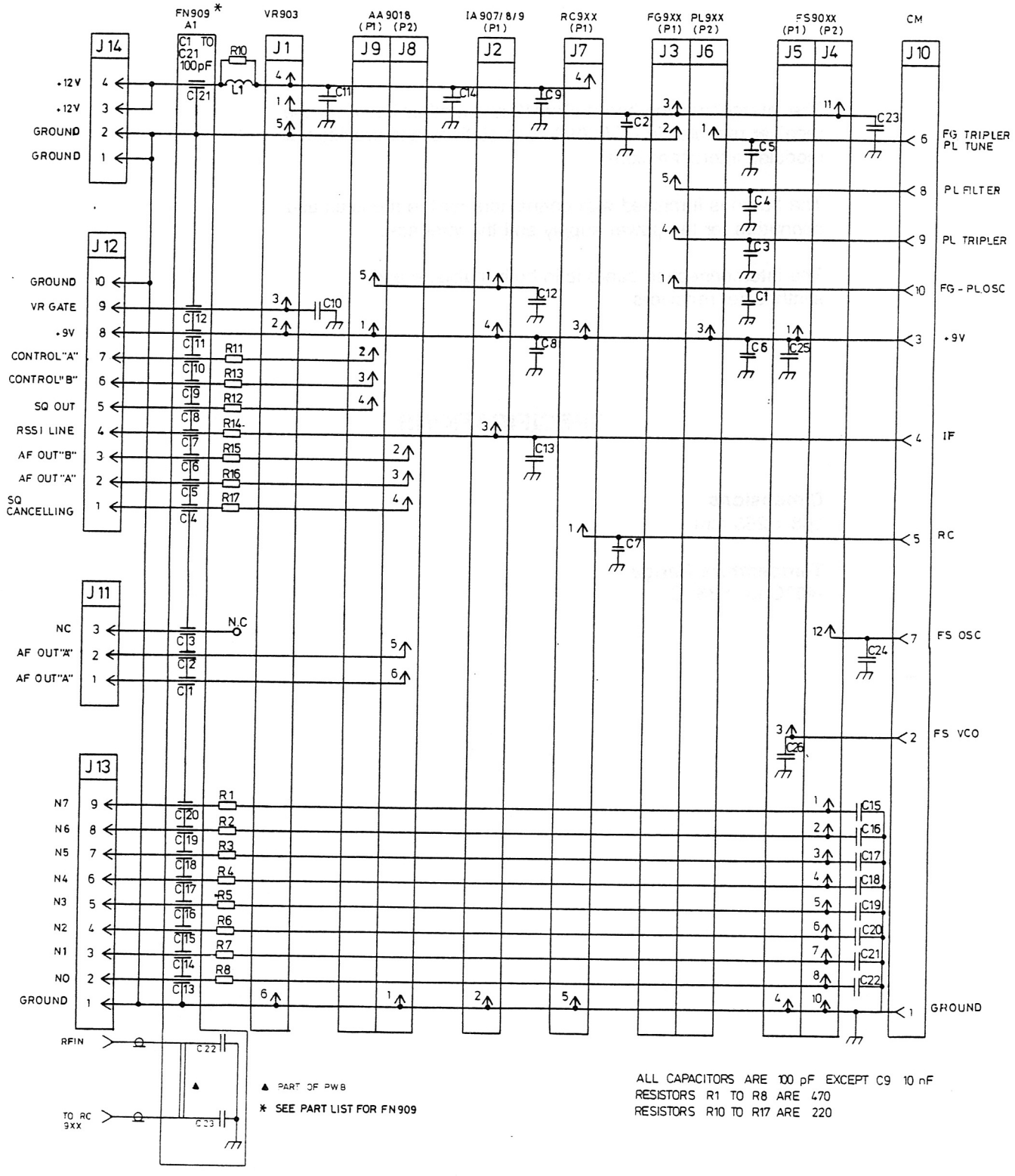

RX JUNCTION PANEL J P9012

CODE NO. M905807G1 | D403.861/3

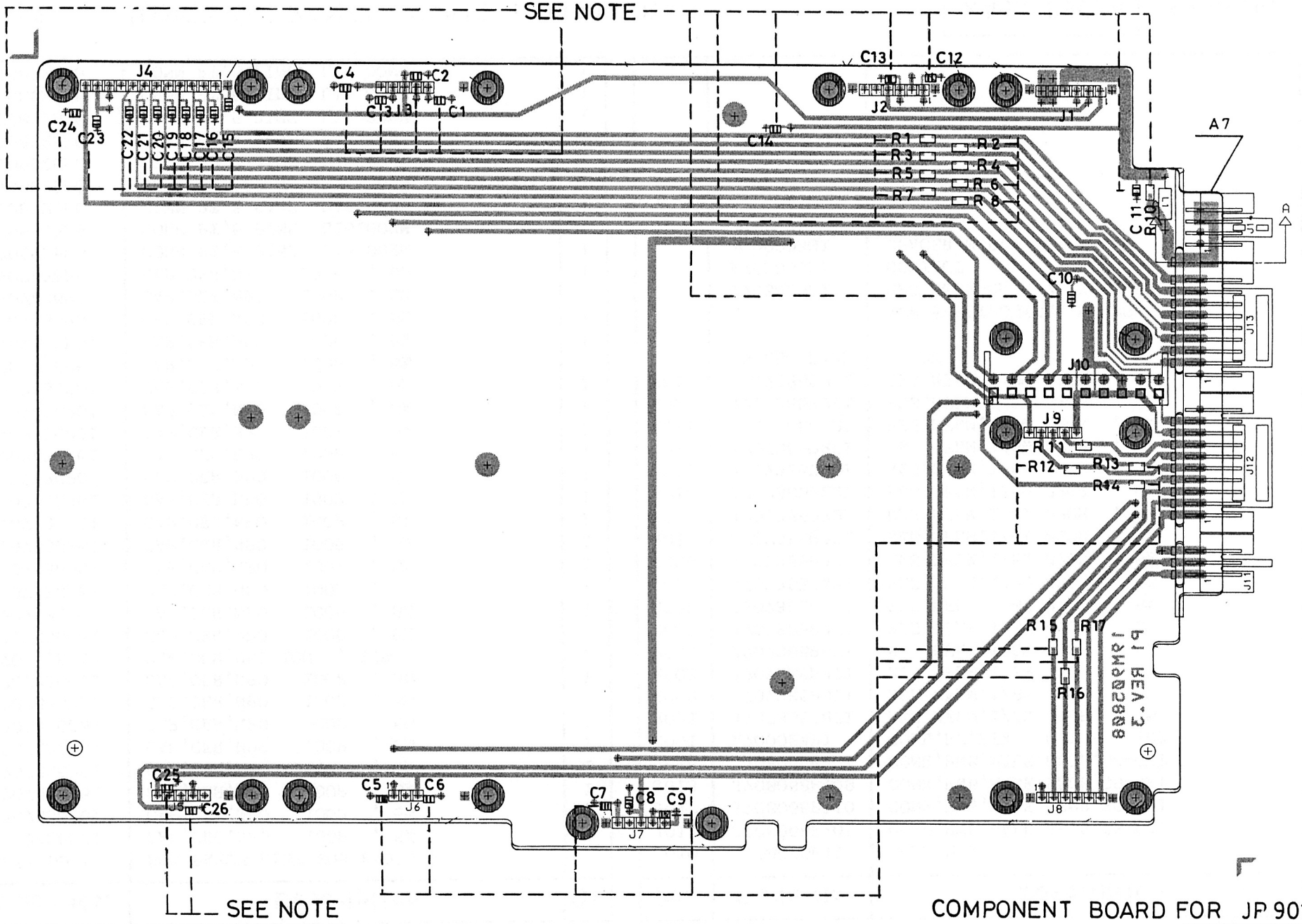

NOTE: CHIP COMPONENTS MOUNTED ON SOLDER-SIDE

COMPONENT BOARD FOR JP 9012

CODE NO. M905807G1 REV.3 D403.862/4

Pos.	Code No.	Description	Qt.
A001	L855690G1	SEE PARTS LIST FOR FN909	
C001	J707436P61	CAP,CER,NPO 100P , 5%	1
C002	J707436P61	CAP,CER,NPO 100P , 5%	1
C003	J707436P61	CAP,CER,NPO 100P , 5%	1
C004	J707436P61	CAP,CER,NPO 100P , 5%	1
C005	J707436P61	CAP,CER,NPO 100P , 5%	1
C006	J707436P61	CAP,CER,NPO 100P , 5%	1
C007	J707436P61	CAP,CER,NPO 100P , 5%	1
C008	J707436P61	CAP,CER,NPO 100P , 5%	1
C009	J707438P14	CAP,CER,CL2 10N , 10%	1
C010	J707436P61	CAP,CER,NPO 100P , 5%	1
C011	J707436P61	CAP,CER,NPO 100P , 5%	1
C012	J707436P61	CAP,CER,NPO 100P , 5%	1
C013	J707436P61	CAP,CER,NPO 100P , 5%	1
C014	J707436P61	CAP,CER,NPO 100P , 5%	1
C015	J707436P61	CAP,CER,NPO 100P , 5%	1
C016	J707436P61	CAP,CER,NPO 100P , 5%	1
C017	J707436P61	CAP,CER,NPO 100P , 5%	1
C018	J707436P61	CAP,CER,NPO 100P , 5%	1
C019	J707436P61	CAP,CER,NPO 100P , 5%	1
C020	J707436P61	CAP,CER,NPO 100P , 5%	1
C021	J707436P61	CAP,CER,NPO 100P , 5%	1
C022	J707436P61	CAP,CER,NPO 100P , 5%	1
C023	J707436P61	CAP,CER,NPO 100P , 5%	1
C024	J707436P61	CAP,CER,NPO 100P , 5%	1
C025	J707436P61	CAP,CER,NPO 100P , 5%	1
C026	J707436P61	CAP,CER,NPO 100P , 5%	1
J001	J708925P6	CONN PT,6 PINS L16.00MM	1
J002	J708925P6	CONN PT,6 PINS L16.00MM	1
J003	J708925P6	CONN PT,5 PINS L16.00MM	1
J004	J708925P6	CONN PT,12PINS L16.00MM	1
J005	J708925P6	CONN PT,5 PINS L16.00MM	1
J006	J708925P6	CONN PT,3 PINS L16.00MM	1
J007	J708925P6	CONN PT,5 PINS L16.00MM	1
J008	J708925P6	CONN PT,6 PINS L16.00MM	1
J009	J708925P6	CONN PT,5 PINS L16.00MM	1

Pos.	Code No.	Description	Qt.
J010	J708085P10	CONN MTR	1
J011	J708068P103	CONN,PWB,MALE RECP,03-CKT	1
J012	J708068P110	CONN,PWB,MALE RECP,10-CKT	1
J013	J708068P109	CONN,PWB,MALE RECP,09-CKT	1
J014	J708068P104	CONN,PWB,MALE RECP,04-CKT	1
L001	A700024P1	COIL,RF,FIX 0.1UH , 10%	1
R001	J707385P471	RES,MFLM,1/8W 470R , 5%	1
R002	J707385P471	RES,MFLM,1/8W 470R , 5%	1
R003	J707385P471	RES,MFLM,1/8W 470R , 5%	1
R004	J707385P471	RES,MFLM,1/8W 470R , 5%	1
R005	J707385P471	RES,MFLM,1/8W 470R , 5%	1
R006	J707385P471	RES,MFLM,1/8W 470R , 5%	1
R007	J707385P471	RES,MFLM,1/8W 470R , 5%	1
R008	J707385P471	RES,MFLM,1/8W 470R , 5%	1
R010	J707385P221	RES,MFLM,1/8W 220R , 5%	1
R011	J707385P221	RES,MFLM,1/8W 220R , 5%	1
R012	J707385P221	RES,MFLM,1/8W 220R , 5%	1
R013	J707385P221	RES,MFLM,1/8W 220R , 5%	1
R014	J707385P221	RES,MFLM,1/8W 220R , 5%	1
R015	J707385P221	RES,MFLM,1/8W 220R , 5%	1
R016	J707385P221	RES,MFLM,1/8W 220R , 5%	1
R017	J707385P221	RES,MFLM,1/8W 220R , 5%	1
	M905808P1R3	BD PW	1
		NON ELECTRONICAL PARTS	
	J708450P1	SPC,SELF-CNCH 7.1X3.0X3.6	17
	A700090P5	CONTACT	12
	J709903G1	SPACER MODIF	2

Parts List JUNCTION PANEL JP9012 : M905807G1

X403.896/4

Storno

JP9013

INTERCONNECTION BOARD

The interconnection board JP9013 is used for connecting +12 V to the power amplifier module in CQF9000 base transmitters.
The interconnections board has two pi-filters for decoupling the battery voltage and the power control voltage from the power amplifier.
The JP9013 is furnished with three connectors and two battery voltage terminals.

J1 - Chassis (-A).
J2 - +12 V (+A).
J3 - +12 V and power control voltage to the exciter.
J4 - +12 V to the receiver.
J5 - Power amplifier connector.

SPECIFICATIONS

Dimensions
45.8 x 80 mm

Temperature Range
$-40^{o}C$ to $+85^{o}C$

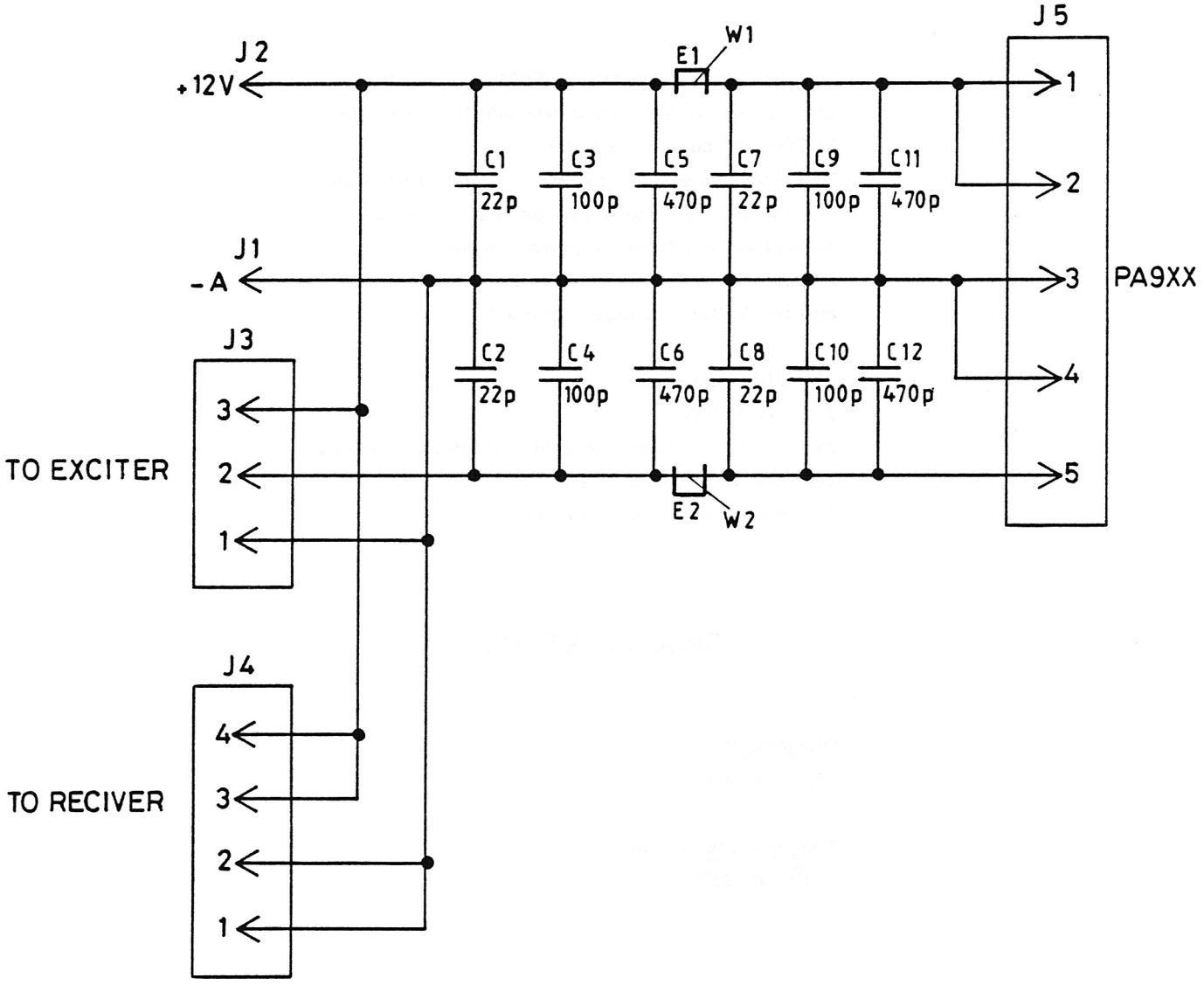

JUNCTION PANEL JP9013

CODE NO. L855594G1 D403.864/2

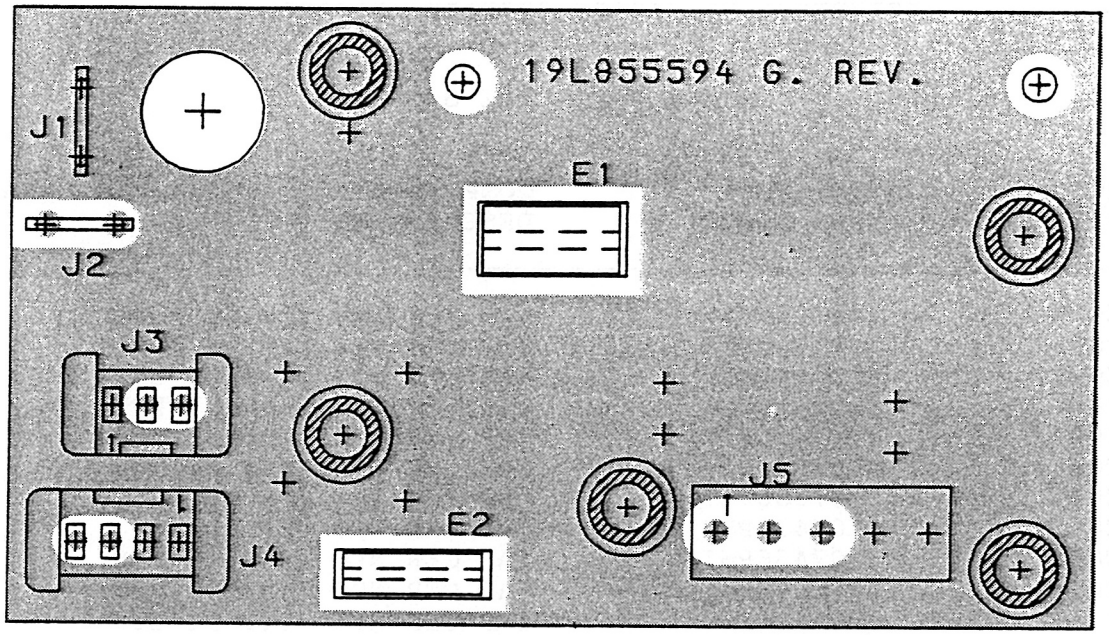

CHIP SIDE

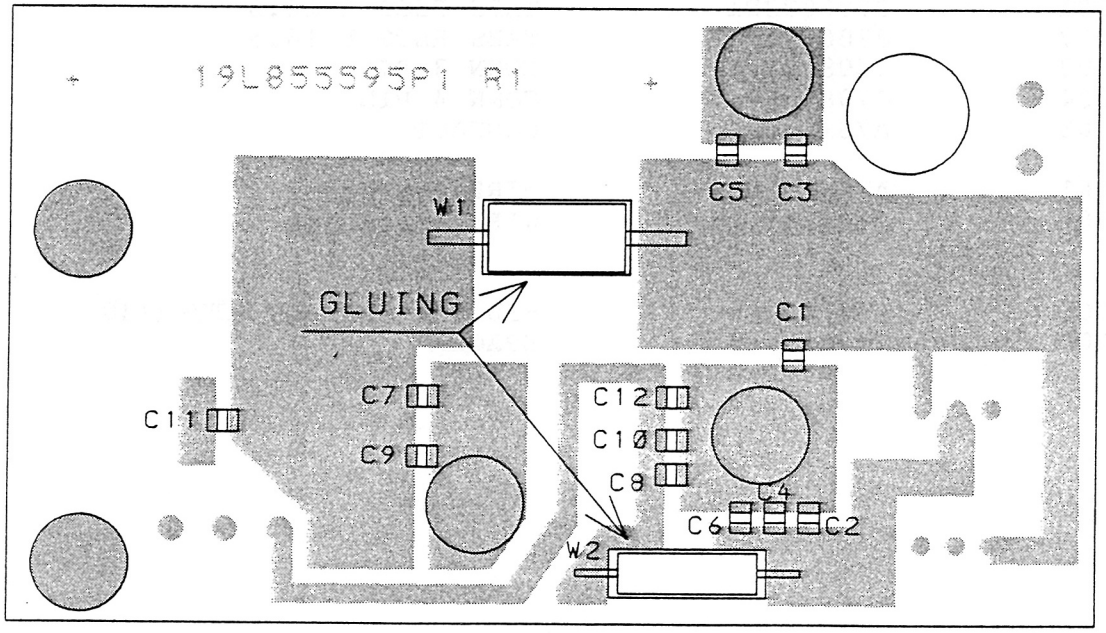

COMPONENT BOARD FOR JP9013

CODE NO. L855594G1 REV.1 D403.865/2

ITEM NUMBER DESCRIPTION

L855594G1 CPNT BD PW JP 9013

P A R T S L I S T :

CIRCUIT POSITION	COMPONENT ITEM NUMBER	COMPONENT DESCRIPTION	QUANTITY
C001	J707436P29	CAP CER NPO 22P 5% 50V	1
C002	J707436P29	CAP CER NPO 22P 5% 50V	1
C003	J707436P61	CAP CER NPO 100P 5% 50V	1
C004	J707436P61	CAP CER NPO 100P 5% 50V	1
C005	J707436P77	CAP CER NPO 470P 5% 50V	1
C006	J707436P77	CAP CER NPO 470P 5% 50V	1
C007	J707436P29	CAP CER NPO 22P 5% 50V	1
C008	J707436P29	CAP CER NPO 22P 5% 50V	1
C009	J707436P61	CAP CER NPO 100P 5% 50V	1
C010	J707436P61	CAP CER NPO 100P 5% 50V	1
C011	J707436P77	CAP CER NPO 470P 5% 50V	1
C012	J707436P77	CAP CER NPO 470P 5% 50V	1
E001	J708771P2	FERRITE BEADS	1
E002	J708771P1	CORE TOR FERR	1
J001	J706683P1	TABS RECP L 16.5	1
J002	J706683P1	TABS RECP L 16.5	1
J003	J708068P3	CONN 3 PIN	1
J004	J708068P4	CONN 4 PIN	1
J005	A701785P4	CONTACT	5
W001	A700133P26	WIRE 1.0 DIA	
W002	A700133P19	WIRE 0,630 DIA	
0007	A701648P4	SIL RUB SEALANT RTV-3140	1
0008	J708450P3	SPACER	5

JP9011/JP9015

INTERCONNECTION B0ARD

The interconnection board JP9011/JP9015 is a mother board for the transmitter modules in CQF9000 base stations and provides all modules interconnetions.

The board is furnished with connectors for the modules and connetors for the power supply and the interface.

The interconnection board is in both multiplier and synthesizer transmitters.

JP9011 is used in CQF911X, CQF933X and CQP977X.
JP9015 is used in CQF955X, CQF966X and CQF999X.

SPECIFICATIONS

Dimensions
112 x 262 mm

Temperature Range
$\div 40^{o}C$ to $+85^{o}C$

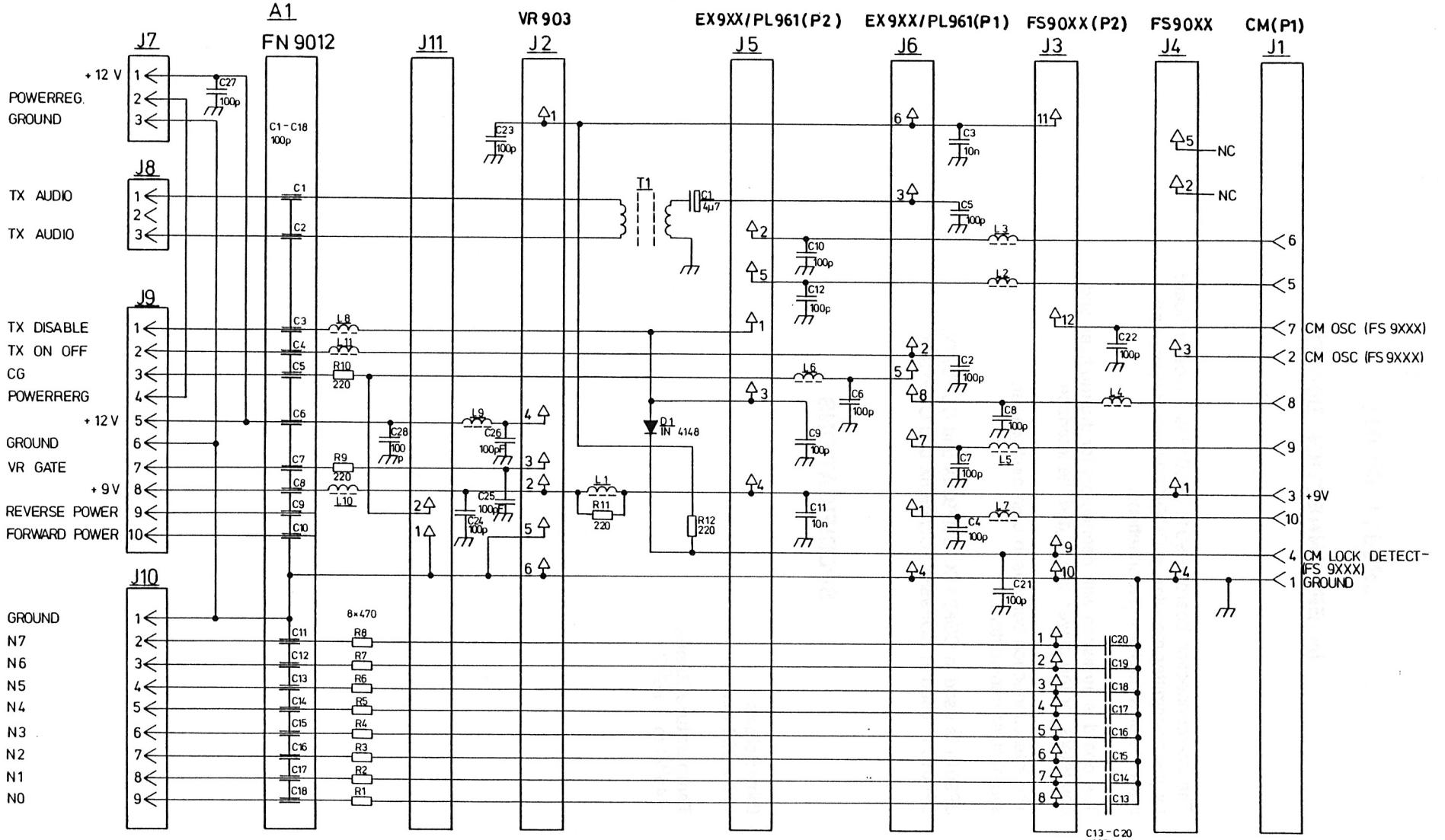

J1. CM					
PIN	5	6	8	9	10
EX931	BP1	BP 2	NC	MIXER	OSC
EX932	NC	BP 2	NC	NC	OSC
EX911	BP1	BP 2	NC	MIXER	OSC
EX912	NC	BP 2	NC	NC	OSC
EX961	NC	TRIPLER	NC	NC	OSC
PL 952	TX STATUS	TUNE	FILTER	TRIPLER	OSC
PL 961	TX STATUS	TUNE	FILTER	TRIPLER	OSC

COMPONENTS MARKED $\frac{CXX}{100}$ ARE PLACED ON NON SOLDER SIDE.

JUNCTION PANEL JP9015

CODE NO. M906279G1 D404.753/2

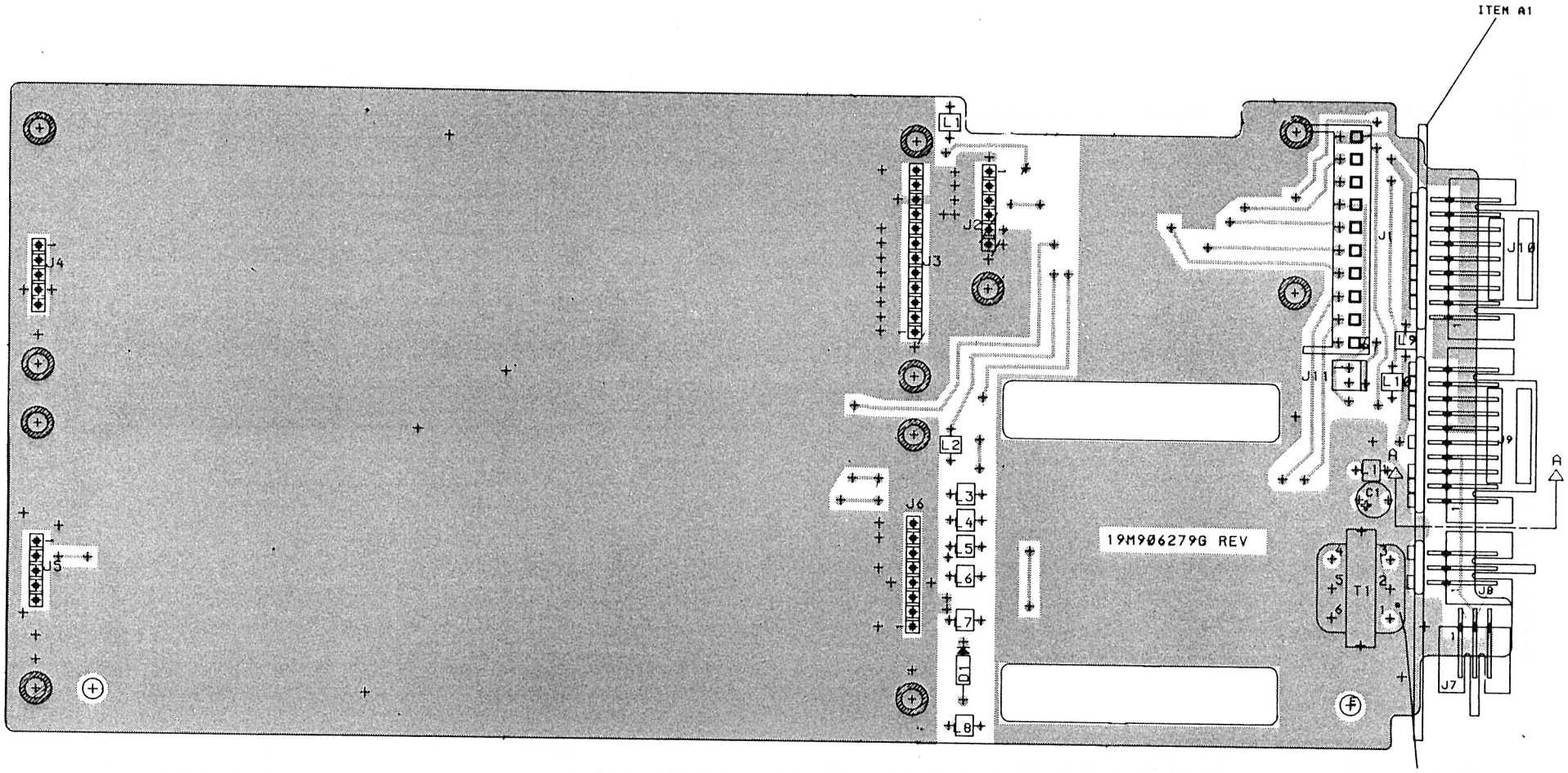

JUNCTION PANEL JP9015
COMPONENT LAYOUT COMPONENT SIDE

CODE NO.M906279G1 | **D404.754**

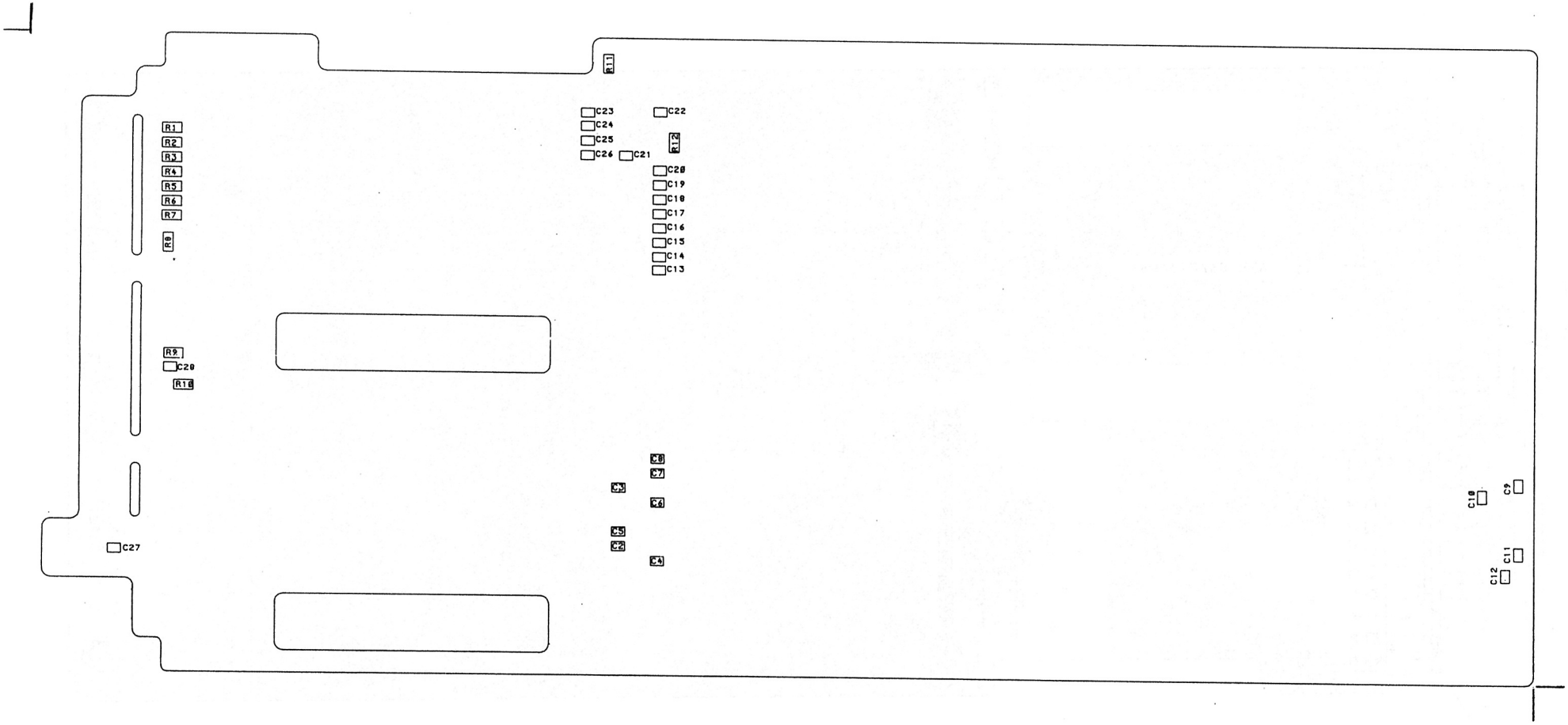

JUNCTION PANEL JP9015
COMPONENT LAYOUT CHIP SIDE
CODE NO.M906279G1 | **D404.755**

DATE: 11/10/1987

Pos	Code No	Description	Qt
A001	L855976G1	FN 9012	1
C001	A701534P6	CAP TA SOL 4U7 35V	1
C002	J707436P61	CAP CER NPO 100P 5%	1
C003	J707438P14	CAP CER CL2 10N 10%	1
C004	J707436P61	CAP CER NPO 100P 5%	1
C005	J707436P61	CAP CER NPO 100P 5%	1
C006	J707436P61	CAP CER NPO 100P 5%	1
C007	J707436P61	CAP CER NPO 100P 5%	1
C008	J707436P61	CAP CER NPO 100P 5%	1
C009	J707436P61	CAP CER NPO 100P 5%	1
C010	J707436P61	CAP CER NPO 100P 5%	1
C011	J707438P14	CAP CER CL2 10N 10%	1
C012	J707436P61	CAP CER NPO 100P 5%	1
C013	J707436P61	CAP CER NPO 100P 5%	1
C014	J707436P61	CAP CER NPO 100P 5%	1
C015	J707436P61	CAP CER NPO 100P 5%	1
C016	J707436P61	CAP CER NPO 100P 5%	1
C017	J707436P61	CAP CER NPO 100P 5%	1
C018	J707436P61	CAP CER NPO 100P 5%	1
C019	J707436P61	CAP CER NPO 100P 5%	1
C020	J707436P61	CAP CER NPO 100P 5%	1
C021	J707436P61	CAP CER NPO 100P 5%	1
C022	J707436P61	CAP CER NPO 100P 5%	1
C023	J707436P61	CAP CER NPO 100P 5%	1
C024	J707436P61	CAP CER NPO 100P 5%	1
C025	J707436P61	CAP CER NPO 100P 5%	1
C026	J707436P61	CAP CER NPO 100P 5%	1
C027	J707436P61	CAP CER NPO 100P 5%	1
C028	J707436P61	CAP CER NPO 100P 5%	1
D001	A700028P1	DIO SI SIG 1N4148	1
J001	J708085P10	CONN MTR	1
J002	J708925P6	CONN PT 6 PINS L16.00MM	1
J003	J708925P6	CONN PT 12 PINS L16.00MM	1
J004	J708925P6	CONN PT 5 PINS L16.00MM	1
J005	J708925P6	CONN PT 5 PINS L16.00MM	1
J006	J708925P6	CONN PT 8 PINS L16.00MM	1

Pos	Code No	Description	Qt
J007	J708068P103	CONN PWB MALE RECP 03-CKT	1
J008	J708068P103	CONN PWB MALE RECP 03-CKT	1
J009	J708068P110	CONN PWB MALE RECP 10-CKT	1
J010	J708068P109	CONN PWB MALE RECP 09-CKT	1
J011	A700072P28	CONN PWB MALE02-CKT	1
L001	J707339G1	COIL FIX ASM	1
L002	J707339G1	COIL FIX ASM	1
L003	J707339G1	COIL FIX ASM	1
L004	J707339G1	COIL FIX ASM	1
L005	J707339G1	COIL FIX ASM	1
L006	J707339G1	COIL FIX ASM	1
L007	J707339G1	COIL FIX ASM	1
L008	J707339G1	COIL FIX ASM	1
L009	J707339G1	COIL FIX ASM	1
L010	J707339G1	COIL FIX ASM	1
L011	J707339G1	COIL FIX ASM	1
R001	J707385P471	RES MFLM 1/8W 470R 5%	1
R002	J707385P471	RES MFLM 1/8W 470R 5%	1
R003	J707385P471	RES MFLM 1/8W 470R 5%	1
R004	J707385P471	RES MFLM 1/8W 470R 5%	1
R005	J707385P471	RES MFLM 1/8W 470R 5%	1
R006	J707385P471	RES MFLM 1/8W 470R 5%	1
R007	J707385P471	RES MFLM 1/8W 470R 5%	1
R008	J707385P471	RES MFLM 1/8W 470R 5%	1
R009	J707385P221	RES MFLM 1/8W 220R 5%	1
R010	J707385P221	RES MFLM 1/8W 220R 5%	1
R011	J707385P221	RES MFLM 1/8W 220R 5%	1
R012	J707385P103	RES MFLM 1/8W 10K 5%	1
T001	J708385P1	TRANSFORMER AUDIO	1
	M906280P1R0	BD PW	1
			0
		NON ELECTRONICAL PARTS	
	A700090P5	CONTACT	6
	J708450P1	SPC SELF-CNCH 7.1X3.0X3.6	11
			0
			0

PA961

POWER AMPLIFIER

Functional Description

The UHF power output amplifier module (PA) contains two broadband stages, a Directional Coupler, a lowpass filter, and Power Control micromodule PC903.
The module can be used in both simplex and duplex radios.

Circuit Description

The signal from the exciter, at least 320 mW, is applied to the input connector, and a broadband, untuned matching network transforms the 50 ohm input impedance to the low impedance of the first transistor stage.
The output signal from the first amplifier stage is impedance-matched to the second stage with broadband networks. The second amplifier boosts the signal to the required power and a network adapts the amplifier impedance to 50 ohm.

A 50 ohm microstrip line conducts the RF signal through a Directional Coupler to the lowpass filter which attenuates the harmonic frequencies. A second microstrip line passes the signal to the output connector.

The Directional Coupler samples the forward power and rectifies the sampled signal. The resulting d.c. voltage is proportional to the RF output level and is applied to the Power Control micromodule, PC903.

The PC903 regulates the DC voltage supply to the first RF amplifier stage to maintain the required power level. A power set control is used to adjust the control voltage to the PC903 micromodule.
Because the Power Control circuit consumes some current in the "TX Unkeyed" condition, a switching circuit reduces the current drain during idle periods. The drive power to the PA stage is sampled and detected by a diode circuit and when drive signal is present, a DC voltage turns on the voltage regulator in the integrated circuit of the PC903 micromodule. The turn-on is sequenced such that the feedback loop is gradually brougt up to the required power level.
A remote power reduction terminal is provided so the power may be reduced in steps by the command system of the radio.

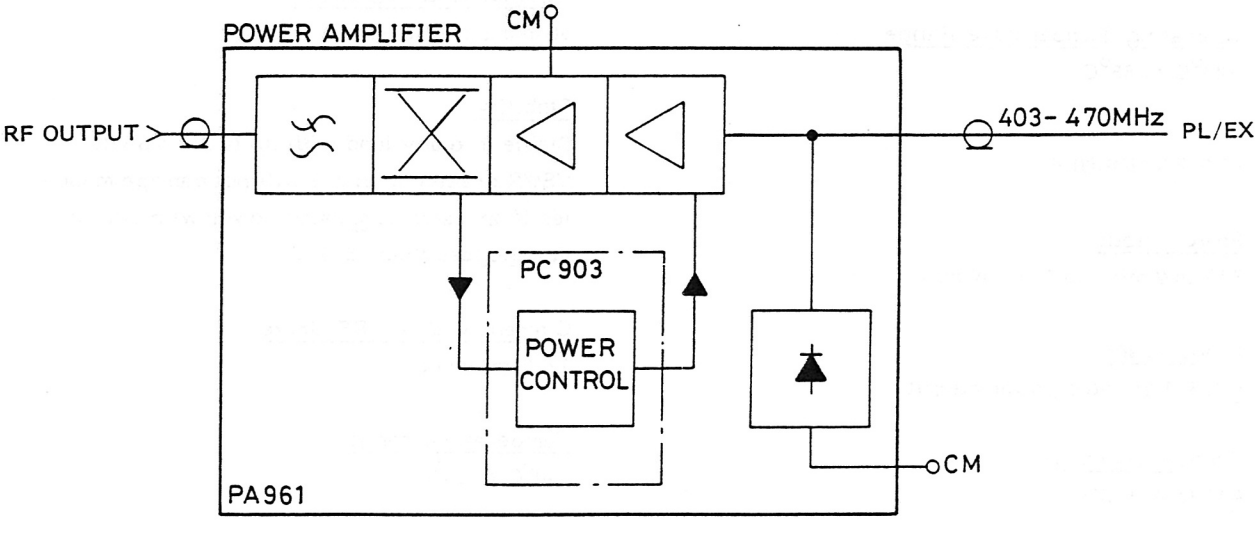

Central metering is used in the PA module to measure the input from the exciter, the PA driver current, the current in the final PA stage, the power control voltage, and the voltage from the Directional Coupler.

DC voltage is applied to the PA module through feedthrough capacitors mounted in the PA shelf. The voltage leads are isolated from chassis ground causing the PA stages to float with respect to the vehicle chassis. Some filtering is provided by a large electrolytic capacitor placed across the voltage input terminals.

A large diode connected across the DC terminals protects against accidental application of reverse battery polarity. If the battery leads are reversed the diode will conduct and the large current will blow the fuse.

The PA module is designed to operate over a DC battery voltage range of 10.8 to 16.6 volts. The output power is set to rated level at 13.5 volts and will remain almost constant for all higher voltages. However, if the voltage is reduced below 13.5 volts the power will remain at rated level only as long as the control loop has excess gain. At a certain voltage the power output will decrease with decreasing voltage.

To prevent excessive radiation of spurious signals, the PA is shielded by a metal cover, and the printed wiring board is held to the heat sink by several screws. The shield between the active PA circuitry and the harmonic filter is a separate filter cover.

TECHNICAL SPECIFICATIONS

FOR LOW PASS-FILTER IN PA MODULE

Frequency range
403 - 470 MHz

Pass-Band insertion loss
0.4 dB: 403 - 470 MHz

Stop band attenuation
38 dB

Operating Temperature Range
-40°C to 85°C

FOR PA MODULE

Power input
320 mW min. to 500 mW max.

Input VSWR
≤2.5:1 at rated power output

Frequency range
403 to 470 MHz

Supply voltage at PA terminals
13.2 V nominal for rated power output.
Operating voltage range 12.5 to 15.5 V

Power output
10 W

Current consumption
3.5 A max.

Nominal load impedance
50 ohms non-reactive

Stability
Stable into any load with up to 3:1 VSWR. VSWR greater than 3:1 will not damage modules if operated at ≤ rated power with supply voltage less than 15.5 V.

Current with no RF drive
12.0 mA max.

Temperature range
-40°C to 85°C

Storno

Storno

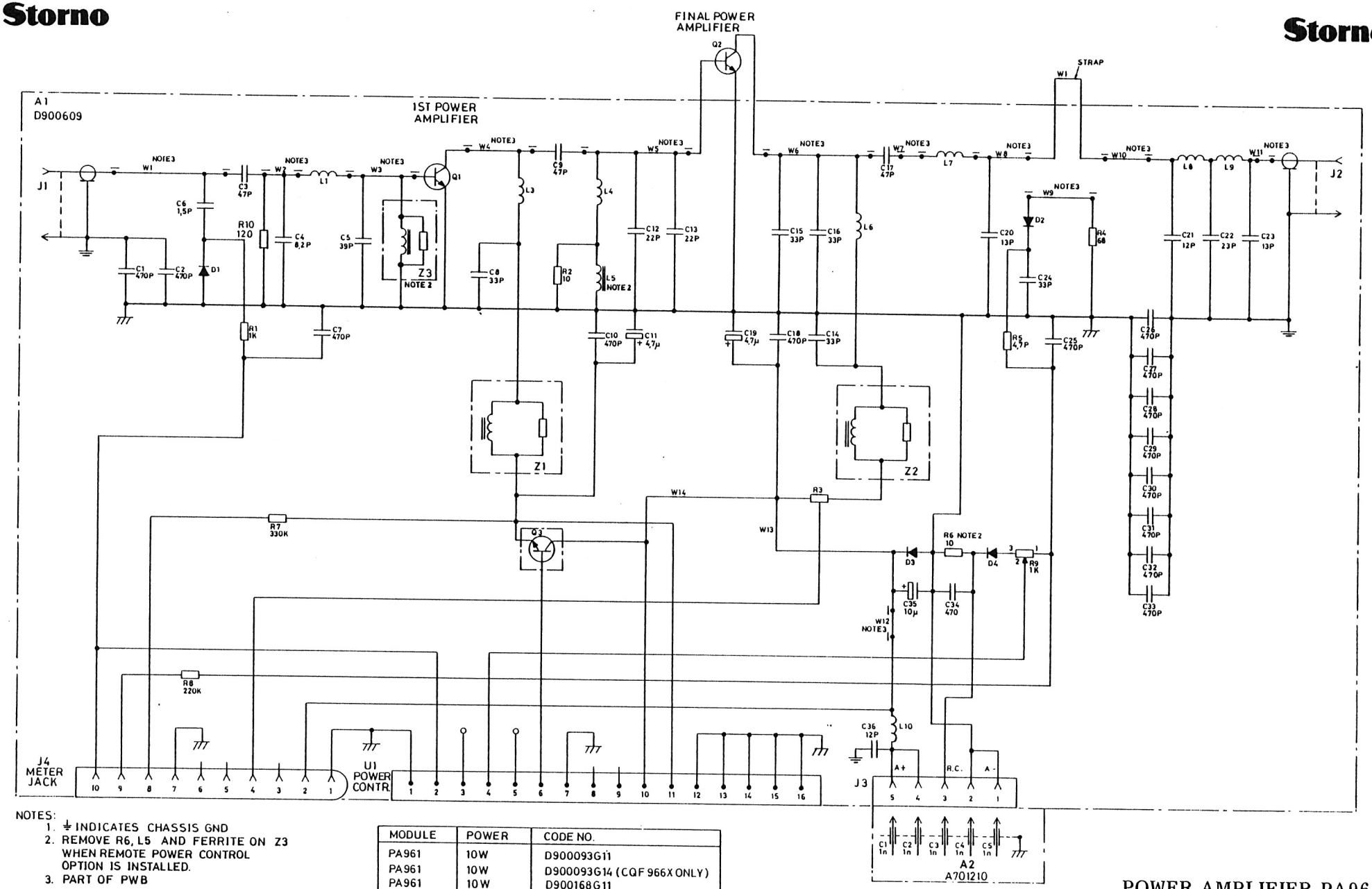

NOTES:
1. ⏚ INDICATES CHASSIS GND
2. REMOVE R6, L5 AND FERRITE ON Z3 WHEN REMOTE POWER CONTROL OPTION IS INSTALLED.
3. PART OF PWB

MODULE	POWER	CODE NO.
PA961	10W	D900093G11
PA961	10W	D900093G14 (CQF 966X ONLY)
PA961	10W	D900168G11

POWER AMPLIFIER PA961

CODE NO. M900168G11 | D402. 929/5

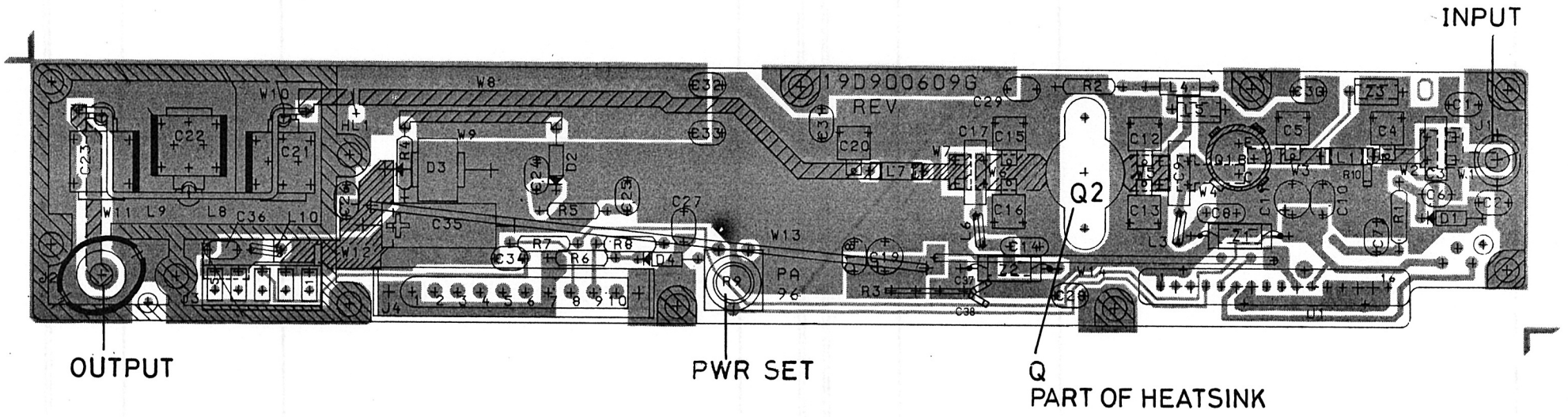

MODULE	POWER	CODE NO.
PA 961	10 W	D900168G11
PA 961	10 W	D900093G14 (CQF 966X ONLY)
PA 961	10 W	D900093G11

COMPONENT LAYOUT
POWER AMPLIFIER PA961

D402. 958/6

DATE: 6/12/1987

Pos	Code No	Description	Qt
A001	D900609G1	PA 96X PVR AMPL	1
Q001	J710015P1	TSTR NPN SI RF-PWR 13W	1
Q003	A700054P1	TSTR NPN SI BD 201	1
W001	A701093P1	STRAP	1
		NON ELECTRONICAL PARTS	
	K805619G1	HEAT SINK	1
	A700031P306	SCR PAN HD M-2.5X 6.0	2
	A701887P1	HT SK	1
	A701900P2	CLIP COMPR.	1

Pos	Code No	Description	Qt

PARTS LIST POWER AMPLIFIER PA961 FOR CQF966X : D900093G14

X404.768

DATE: 6/12/1987

Pos	Code No	Description	Qt
C001	A700233P5	CAP CER CL2 470P 20%	1
C002	A700233P5	CAP CER CL2 470P 20%	1
C003	A700015P21	CAP PTFE 47P 5%	1
C004	A700006P4	CAP PTFE 8P2 10%	1
C005	A700006P23	CAP MICA 39P 5%	1
C006	A700235P3	CAP CER N150 1P5 .25P	1
C007	A700233P5	CAP CER CL2 470P 20%	1
C008	A700235P19	CAP CER N150 33P 5%	1
C009	A700015P21	CAP PTFE 47P 5%	1
C010	A700233P5	CAP CER CL2 470P 20%	1
C011	A701534P6	CAP TA SOL 4U7 35V	1
C012	A700006P17	CAP MICA 22P 5%	1
C013	A700006P19	CAP MICA 27P 5%	1
C014	A700235P19	CAP CER N150 33P 5%	1
C015	A700006P19	CAP MICA 27P 5%	1
C016	A700006P19	CAP MICA 27P 5%	1
C017	A700015P21	CAP PTFE 47P 5%	1
C018	A700233P5	CAP CER CL2 470P 20%	1
C019	A701534P6	CAP TA SOL 4U7 35V	1
C020	A700006P9	CAP MICA 13P 5%	1
C021	A700131P12	CAP PTFE 12P 0.5P	1
C022	A700131P23	CAP PTFE 23P 0.5P	1
C023	A700131P13	CAP PTFE 13P 0.5P	1
C024	A700235P19	CAP CER N150 33P 5%	1
C025	A700233P5	CAP CER CL2 470P 20%	1
C026	A700233P5	CAP CER CL2 470P 20%	1
C027	A700233P5	CAP CER CL2 470P 20%	1
C028	A700233P5	CAP CER CL2 470P 20%	1
C029	A700233P5	CAP CER CL2 470P 20%	1
C030	A700233P5	CAP CER CL2 470P 20%	1
C031	A700233P5	CAP CER CL2 470P 20%	1
C032	A700233P5	CAP CER CL2 470P 20%	1
C033	A700233P5	CAP CER CL2 470P 20%	1
C034	A700233P5	CAP CER CL2 470P 20%	1
C035	A700064P1	CAP ELECT 10U 25V	1
C036	A700235P14	CAP CER N150 12P 5%	1
C037	J707809P19	CAP CER NPO 33P 5%	1

Pos	Code No	Description	Qt
C038	J707809P19	CAP CER NPO 33P 5%	1
D001	A700047P3	DIO SI SIG 1N6263	1
D002	A700047P3	DIO SI SIG 1N6263	1
D003	A700082P1	DIO SI PWR MR 751	1
D004	A700028P1	DIO SI SIG 1N4148	1
J001	A700171P2	CONN PWB FEM	1
J002	A701097G1	CONNECTOR	1
J003	A700102P13	CONNECTOR 5CKT	1
J004	J708085P10	CONN MTR	1
L001	A701006P7	STRAP	1
L003	A701237P1	COIL	1
L004	A700024P1	COIL RF FIX 0.1UH 10%	1
L005	J709078G1	COIL ASM	1
L006	A701237P1	COIL	1
L007	A701006P4	STRAP	1
L010	A701237P1	COIL	1
Q001	A700066P2	TSTR NPN SI RF-PWR 2.0W	1
R001	A700019P37	RES DEPC 1/4W 1KO 5%	1
R002	A700019P13	RES DEPC 1/4W 10R 5%	1
R003	J708143P2	RESISTOR	1
R004	A700019P23	RES DEPC 1/4W 68R 5%	1
R005	A700019P45	RES DEPC 1/4W 4K7 5%	1
R006	A700019P13	RES DEPC 1/4W 10R 5%	1
R007	A700019P67	RES DEPC 1/4W 330K 5%	1
R008	A700019P65	RES DEPC 1/4W 220K 5%	1
R009	A700185P1	RES VAR PLSTC 1KO 20%	1
R010	J707385P681	RES MFLM 1/8W 680R 5%	1
U001	D900111G1	PC 903	1
W013	A701233P1	JMPR	1
W014	A7011Q5P1	JUMPER	1
Z001	J709081G3	FILTER ASM	1
Z002	J709081G3	FILTER ASM	1
Z003	J709080G3	FILTER ASM	1
	D900610P1	BD PW	1

DATE: 6/12/1987

Pos	Code No	Description	Qt
		NON ELECTRONICAL PARTS	
	A700114P1	TERM STUD INSULATED	3
	B800554P1	COIL	1
	J706513P1	HEAT SINK	1

Pos	Code No	Description	Qt

Storno

PA962 & PA963

POWER AMPLIFIER

Functional Description

The UHF power output amplifier module (PA) contains three RF amplifier stages, a Directional Coupler, a lowpass filter, and Power Control micromodule PC903.
The module can be used in both simplex and duplex radios.

Circuit Description

The signal from the exciter, at least 320 mW, is applied to the input connector, and a broadband, untuned matching network transforms the 50 ohm input impedance to the low impedance of the first transistor stage.
The output signal from the first amplifier stage is impedance-matched to the second stage with broadband networks. The second amplifier boosts the signal power and a network adapts the amplifier impedance to the third amplifier.
The additional stage is placed between the second amplifier and the directional coupler to boost the RF level to at least 25 watts.

A 50 ohm microstrip line conducts the RF signal through a Directional Coupler to the lowpass filter which attenuates the harmonic frequencies. A second microstrip line passes the signal to the output connector.

The Directional Coupler samples the forward power and rectifies the sampled signal. The resulting d.c. voltage is proportional to the RF output level and is applied to the Power Control micromodule, PC903.

The PC903 regulates the DC voltage supply to the first RF amplifier stage to maintain the required power level. A power set control is used to adjust the control voltage to the PC903 micromodule.
Because the Power Control circuit consumes some current in the "TX Unkeyed" condition, a switching circuit reduces the current drain during idle periods. The drive power to the PA stage is sampled and detected by a diode circuit and when drive signal is present, a DC voltage turns on the voltage regulator in the integrated circuit of the PC903 micromodule. The turn-on is sequenced such that the feedback loop is gradually brougt up to the required power level.
A remote power reduction terminal is provided so the power may be reduced in steps by the command system of the radio.

Central metering is used in the PA module to measure the input from the exciter, the PA dri-

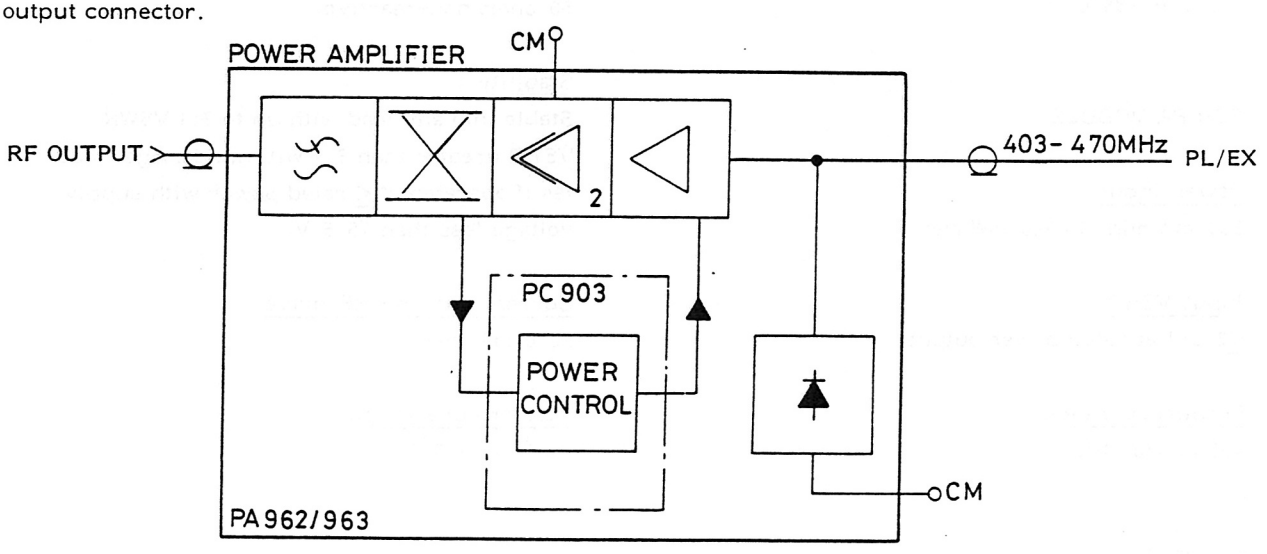

ver current, the current in the final PA stage, the power control voltage, and the voltage from the Directional Coupler.

DC voltage is applied to the PA module through feedthrough capacitors mounted in the PA shelf. The voltage leads are isolated from chassis ground causing the PA stages to float with respect to the vehicle chassis. Some filtering is provided by a large electrolytic capacitor placed across the voltage input terminals.

A large diode connected across the DC terminals protects against accidental application of reverse battery polarity. If the battery leads are reversed the diode will conduct and the large current will blow the fuse.

The PA module is designed to operate over a DC battery voltage range of 10.8 to 16.6 volts. The output power is set to rated level at 13.5 volts and will remain almost constant for all higher voltages. However, if the voltage is reduced below 13.5 volts the power will remain at rated level only as long as the control loop has excess gain. At a certain voltage the power output will decrease with decreasing voltage.

To prevent excessive radiation of spurious signals, the PA is shielded by a metal cover, and the printed wiring board is held to the heat sink by several screws. The shield between the active PA circuitry and the harmonic filter is a separate filter cover.

TECHNICAL SPECIFICATIONS

FOR LOW PASS-FILTER IN PA MODULE

Frequency range
403 - 470 MHz

Pass-Band insertion loss
0.4 dB: 403 - 470 MHz

Stop band attenuation
38 dB

Operating Temperature Range
-40°C to +85°C

FOR PA MODULE

Power input
320 mW min. to 500 mW max.

Input VSWR
≤2.5:1 at rated power output

Frequency range
403 to 470 MHz

Supply voltage at PA terminals
13.2 V nominal for rated power output.
Operating voltage range 12.5 to 15.5 V

Maximum PA current at rated Power output
PA962 (25 W): 6.5 A
PA963 (40 W): 10.0 A

Current consumption
3.5 A max.

Nominal load impedance
50 ohms non-reactive

Stability
Stable into any load with up to 3:1 VSWR.
VSWR greater than 3:1 will not damage modules if operated at ≤ rated power with supply voltage less than 15.5 V.

Current with no RF drive
22.0 mA max.

Temperature range
-40°C to +85°C

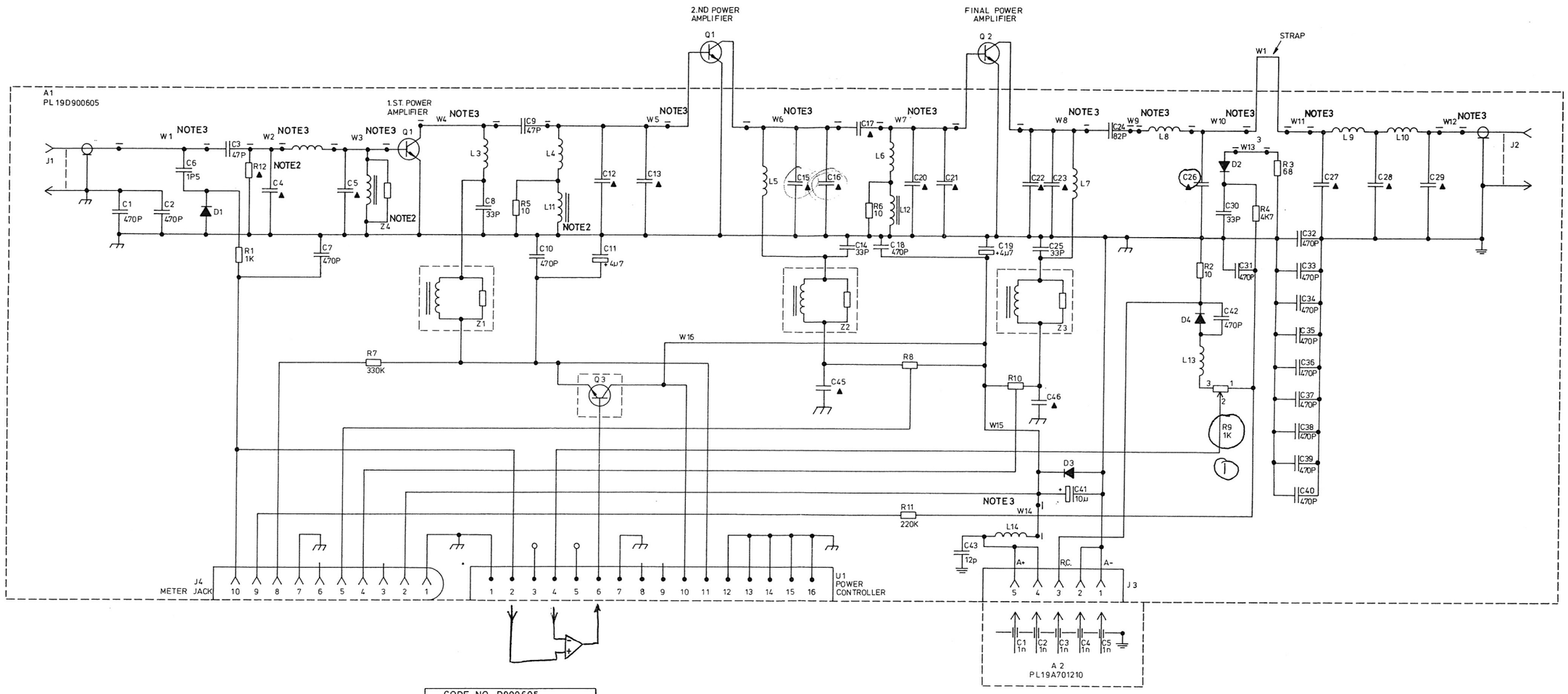

NOTES:

1 ⏚ INDICATES A−

⏚ INDICATES CHASSIS GND

2 REMOVE R12, L11 AND FERRITE ON Z4 WHEN REMOTE POWER CONTROL OPTION IS INSTALLED.

3 PART OF PWB

▲	CODE NO. D900605 G1		CODE NO. D900605 G3	
CAPACITOR	PA962		PA963	
C4	8.2P		8.2P	
C5	39 P		39 P	
C12	22 P		22 P	
C13	22 P		22 P	
C15	20P		15 P	
C16	15 P		20P	
C17	15P		15P	
C20	27P		27P	
C21	27P		27P	
C22	43P		43P	
C23	43P		43P	
C26	14P		15P	
C27	12P		12P	
C28	23P		23P	
C29	13P		13P	
C45	33P		33P	
C46	33P		33P	
R12	680		680	

MODULE	POWER	CODE NO.
PA962	25W	D900093G7
PA962	25W	D900168G7
PA962	25W	D900093G15 (CQF 966X ONLY)
PA963	40W	D900168G9
PA963	40W	D900093G16 (CQF 966X ONLY)
PA963	40W	D900093G9

① 25W ADJUST.

POWER AMPLIFIER PA 962 , PA 963

D402.930/7

Storno

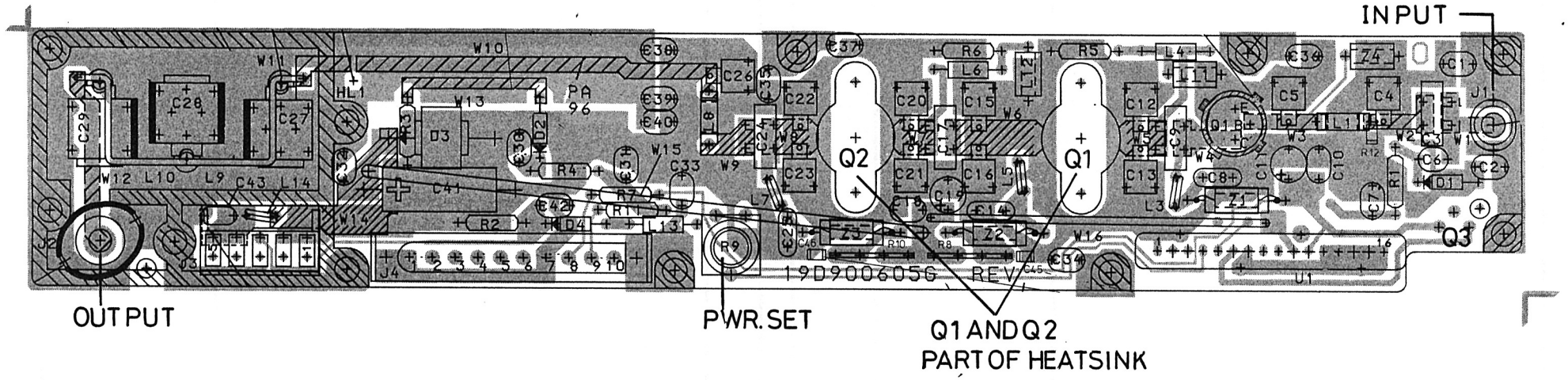

MODULE	POWER	CODE NO.
PA962	25W	D900093G7
PA962	25W	D900093G15 (CQF966X ONLY)
PA962	25W	D900163G7
PA963	40W	D900093G9
PA963	40W	D900093G16 (CQF966X ONLY)
PA963	40W	D900168G9

POWER AMPLIFIER PA962, PA963
COMPONENT LAYOUT

D402.959/7

Pos.	Code No.	Description	Qt.
A001	D900605G1	BD PW **SEE X404.660**	1
Q001	J710015P1	TSTR,NPN,SI RF-PWR, 13W	1
Q002	A700052P2	TSTR,NPN,SI RF-PWR, 35W	1
Q003	A700054P1	TSTR,NPN,SI BD 201	1
W001	A701093P1	STRAP	1
		NON ELECTRONICAL PARTS	
	K805619G1	HEAT SINK	1
	A700031P306	SCR,PAN HD M-2.5X 6.0	4
	A701887P1	HT SK	1
	A701900P2	CLIP, COMPR.	1

Pos.	Code No.	Description	Qt.

Parts List POWER AMPLIFIER PA962 FOR CQF966X : D900093G15 X404.657

Pos.	Code No.	Description	Qt.
C001	A700233P5	CAP,CER,CL2 470P , 20%	1
C002	A700233P5	CAP,CER,CL2 470P , 20%	1
C003	A700015P21	CAP,PTFE 47P , 5%	1
C004	A700006P4	CAP,PTFE 8P2 , 10%	1
C005	A700006P23	CAP,MICA 39P , 5%	1
C006	A700235P3	CAP,CER,N150 1P5 ,.25P	1
C007	A700233P5	CAP,CER,CL2 470P , 20%	1
C008	A700235P19	CAP,CER,N150 33P , 5%	1
C009	A700015P21	CAP,PTFE 47P , 5%	1
C010	A700233P5	CAP,CER,CL2 470P , 20%	1
C011	A701534P6	CAP,TA,SOL 4U7 , 35V	1
C012	A700006P17	CAP,MICA 22P , 5%	1
C013	A700006P17	CAP,MICA 22P , 5%	1
C014	A700235P19	CAP,CER,N150 33P , 5%	1
C015	A700006P16	CAP,MICA 20P , 5%	1
C016	A700006P11	CAP,MICA 15P , 5%	1
C017	A700015P8	CAP,PTFE 15P , 5%	1
C018	A700233P5	CAP,CER,CL2 470P , 20%	1
C019	A701534P6	CAP,TA,SOL 4U7 , 35V	1
C020	A700006P19	CAP,MICA 27P , 5%	1
C021	A700006P19	CAP,MICA 27P , 5%	1
C022	A700006P27	CAP,MICA 51P , 5%	1
C023	A700006P24	CAP,MICA 43P , 5%	1
C024	A700015P27	CAP,PTFE 82P , 5%	1
C025	A700235P19	CAP,CER,N150 33P , 5%	1
C026	A700006P10	CAP,MICA 14P , 5%	1
C027	A700131P12	CAP,PTFE 12P ,0.5P	1
C028	A700131P23	CAP,PTFE 23P ,0.5P	1
C029	A700131P13	CAP,PTFE 13P ,0.5P	1
C030	A700235P19	CAP,CER,N150 33P , 5%	1
C031	A700233P5	CAP,CER,CL2 470P , 20%	1
C032	A700233P5	CAP,CER,CL2 470P , 20%	1
C033	A700233P5	CAP,CER,CL2 470P , 20%	1
C034	A700233P5	CAP,CER,CL2 470P , 20%	1
C035	A700233P5	CAP,CER,CL2 470P , 20%	1
C036	A700233P5	CAP,CER,CL2 470P , 20%	1

Pos.	Code No.	Description	Qt.
C037	A700233P5	CAP,CER,CL2 470P , 20%	1
C038	A700233P5	CAP,CER,CL2 470P , 20%	1
C039	A700233P5	CAP,CER,CL2 470P , 20%	1
C040	A700233P5	CAP,CER,CL2 470P , 20%	1
C041	A700064P1	CAP,ELECT 10U , 25V	1
C042	A700233P5	CAP,CER,CL2 470P , 20%	1
C043	A700235P14	CAP,CER,N150 12P , 5%	1
C045	J707809P19	CAP,CER,NPO 33P , 5%	1
C046	J707809P19	CAP,CER,NPO 33P , 5%	1
D001	A700047P3	DIO,SI,SIG 1N6263	1
D002	A700047P3	DIO,SI,SIG 1N6263	1
D003	A700082P1	DIO,SI,PWR MR 751	1
D004	A700028P1	DIO,SI,SIG 1N4148	1
J001	A700171P2	CONN,PWB,FEM	1
J002	A701097G1	CONNECTOR	1
J003	A700102P13	CONNECTOR 5CKT	1
J004	B800555G1	CONN METERING	1
L001	A701006P6	STRAP	1
L002	J709078G1	COIL ASM	1
L003	A701237P1	COIL	1
L004	A700024P1	COIL,RF,FIX 0.1UH , 10%	1
L005	A701237P1	COIL	1
L006	A700024P1	COIL,RF,FIX 0.1UH , 10%	1
L007	A701237P1	COIL	1
L008	A701006P4	STRAP	1
L011	J709078G1	COIL ASM	1
L012	J709078G1	COIL ASM	1
L013	A700024P15	COIL,RF,FIX 1.5UH , 10%	1
L014	A701237P1	COIL	1
Q001	A700066P2	TSTR,NPN,SI RF-PWR,2.0W	1
R001	A700019P37	RES,DEPC,1/4W 1KO , 5%	1
R002	A700019P13	RES,DEPC,1/4W 10R , 5%	1
R003	A700019P23	RES,DEPC,1/4W 68R , 5%	1
R004	A700019P45	RES,DEPC,1/4W 4K7 , 5%	1
R005	A700019P13	RES,DEPC,1/4W 10R , 5%	1
R006	A700019P13	RES,DEPC,1/4W 10R , 5%	1

Pos.	Code No.	Description	Qt.
R007	A700019P67	RES,DEPC,1/4W 330K , 5%	1
R008	J708143P2	RESISTOR	1
R009	A700185P1	RES,VAR,PLSTC 1KO , 20%	1
R010	J708143P2	RESISTOR	1
R011	A700019P65	RES,DEPC,1/4W 220K , 5%	1
R012	J707385P681	RES,MFLM,1/8W 680R , 5%	1
U001	D900111G1	PC 903 SEE X404.659	1
W015	A701233P1	JMPR	1
W016	A701105P1	JUMPER	1
Z001	J709081G3	FILTER ASM	1
Z002	J709081G3	FILTER ASM	1
Z003	J709081G3	FILTER ASM	1
Z004	J709080G3	FILTER ASM	1
	D900606P1R2	BD PW	1
		NON ELECTRONICAL PARTS	
	A700114P1	TERM,STUD INSULATED	3
	B800554P1	COIL	1
	J706513P1	HEAT SINK	1

Pos.	Code No.	Description	Qt.

Pos.	Code No.	Description	Qt.
A001	D900605G3	BD PW **SEE X404.661**	1
Q001	J710015P1	TSTR,NPN,SI RF-PWR, 13W	1
Q002	A700056P2	TSTR,NPN,SI RF-PWR, 47W	1
Q003	A700054P1	TSTR,NPN,SI BD 201	1
W001	A701093P1	STRAP	1
		NON ELECTRONICAL PARTS	
	K805619G1	HEAT SINK	1
	A700031P306	SCR,PAN HD M-2.5X 6.0	4
	A701887P1	HT SK	1
	A701887P1	HT SK	1
	A701900P2	CLIP, COMPR.	1

Pos.	Code No.	Description	Qt.

Parts List POWER AMPLIFIER PA963 FOR CQF966X : D900093G16 X404.658

Pos.	Code No.	Description	Qt.
C001	A700233P5	CAP,CER,CL2 470P , 20%	1
C002	A700233P5	CAP,CER,CL2 470P , 20%	1
C003	A700015P21	CAP,PTFE 47P , 5%	1
C004	A700006P4	CAP,PTFE 8P2 , 10%	1
C005	A700006P23	CAP,MICA 39P , 5%	1
C006	A700235P3	CAP,CER,N150 1P5 ,.25P	1
C007	A700233P5	CAP,CER,CL2 470P , 20%	1
C008	A700235P19	CAP,CER,N150 33P , 5%	1
C009	A700015P21	CAP,PTFE 47P , 5%	1
C010	A700233P5	CAP,CER,CL2 470P , 20%	1
C011	A701534P6	CAP,TA,SOL 4U7 , 35V	1
C012	A700006P17	CAP,MICA 22P , 5%	1
C013	A700006P17	CAP,MICA 22P , 5%	1
C014	A700235P19	CAP,CER,N150 33P , 5%	1
C015	A700006P11	CAP,MICA 15P , 5%	1
C016	A700006P16	CAP,MICA 20P , 5%	1
C017	A700015P8	CAP,PTFE 15P , 5%	1
C018	A700233P5	CAP,CER,CL2 470P , 20%	1
C019	A701534P6	CAP,TA,SOL 4U7 , 35V	1
C020	A700006P19	CAP,MICA 27P , 5%	1
C021	A700006P19	CAP,MICA 27P , 5%	1
C022	A700006P24	CAP,MICA 43P , 5%	1
C023	A700006P24	CAP,MICA 43P , 5%	1
C024	A700015P27	CAP,PTFE 82P , 5%	1
C025	A700235P19	CAP,CER,N150 33P , 5%	1
C026	A700006P11	CAP,MICA 15P , 5%	1
C027	A700131P12	CAP,PTFE 12P ,0.5P	1
C028	A700131P23	CAP,PTFE 23P ,0.5P	1
C029	A700131P13	CAP,PTFE 13P ,0.5P	1
C030	A700235P19	CAP,CER,N150 33P , 5%	1
C031	A700233P5	CAP,CER,CL2 470P , 20%	1
C032	A700233P5	CAP,CER,CL2 470P , 20%	1
C033	A700233P5	CAP,CER,CL2 470P , 20%	1
C034	A700233P5	CAP,CER,CL2 470P , 20%	1
C035	A700233P5	CAP,CER,CL2 470P , 20%	1
C036	A700233P5	CAP,CER,CL2 470P , 20%	1

Pos.	Code No.	Description	Qt.
C037	A700233P5	CAP,CER,CL2 470P , 20%	1
C038	A700233P5	CAP,CER,CL2 470P , 20%	1
C039	A700233P5	CAP,CER,CL2 470P , 20%	1
C040	A700233P5	CAP,CER,CL2 470P , 20%	1
C041	A700064P1	CAP,ELECT 10U , 25V	1
C042	A700233P5	CAP,CER,CL2 470P , 20%	1
C043	A700235P14	CAP,CER,N150 12P , 5%	1
C045	J707809P19	CAP,CER,NPO 33P , 5%	1
C046	J707809P19	CAP,CER,NPO 33P , 5%	1
D001	A700047P3	DIO,SI,SIG 1N6263	1
D002	A700047P3	DIO,SI,SIG 1N6263	1
D003	A700082P1	DIO,SI,PWR MR 751	1
D004	A700028P1	DIO,SI,SIG 1N4148	1
J001	A700171P2	CONN,PWB,FEM	1
J002	A701097G1	CONNECTOR	1
J003	A700102P13	CONNECTOR 5CKT	1
J004	B800555G1	CONN METERING	1
L001	A701006P6	STRAP	1
L002	J709078G1	COIL ASM	1
L003	A701237P1	COIL	1
L004	A700024P1	COIL,RF,FIX 0.1UH , 10%	1
L005	A701237P1	COIL	1
L006	A700024P1	COIL,RF,FIX 0.1UH , 10%	1
L007	A701237P1	COIL	1
L008	A701006P5	STRAP	1
L011	J709078G1	COIL ASM	1
L012	J709078G1	COIL ASM	1
L013	A700024P15	COIL,RF,FIX 1.5UH , 10%	1
L014	A701237P1	COIL	1
Q001	A700066P2	TSTR,NPN,SI RF-PWR,2.0W	1
R001	A700019P37	RES,DEPC,1/4W 1KO , 5%	1
R002	A700019P13	RES,DEPC,1/4W 10R , 5%	1
R003	A700019P23	RES,DEPC,1/4W 68R , 5%	1
R004	A700019P45	RES,DEPC,1/4W 4K7 , 5%	1
R005	A700019P13	RES,DEPC,1/4W 10R , 5%	1
R006	A700019P13	RES,DEPC,1/4W 10R , 5%	1

Pos.	Code No.	Description	Qt.
R007	A700019P67	RES,DEPC,1/4W 330K , 5%	1
R008	J708143P2	RESISTOR	1
R009	A700185P1	RES,VAR,PLSTC 1KO , 20%	1
R010	J708143P2	RESISTOR	1
R011	A700019P65	RES,DEPC,1/4W 220K , 5%	1
R012	J707385P681	RES,MFLM,1/8W 680R , 5%	1
U001	D900111G1	PC 903	1
W015	A701233P1	JMPR	1
W016	A701105P1	JUMPER	1
Z001	J709081G3	FILTER ASM	1
Z002	J709081G3	FILTER ASM	1
Z003	J709081G3	FILTER ASM	1
Z004	J709080G3	FILTER ASM	1
	D900606P1R2	BD PW	1
		NON ELECTRONICAL PARTS	
	A700114P1	TERM,STUD INSULATED	3
	B800554P1	COIL	1
	J706513P1	HEAT SINK	1

Pos.	Code No.	Description	Qt.

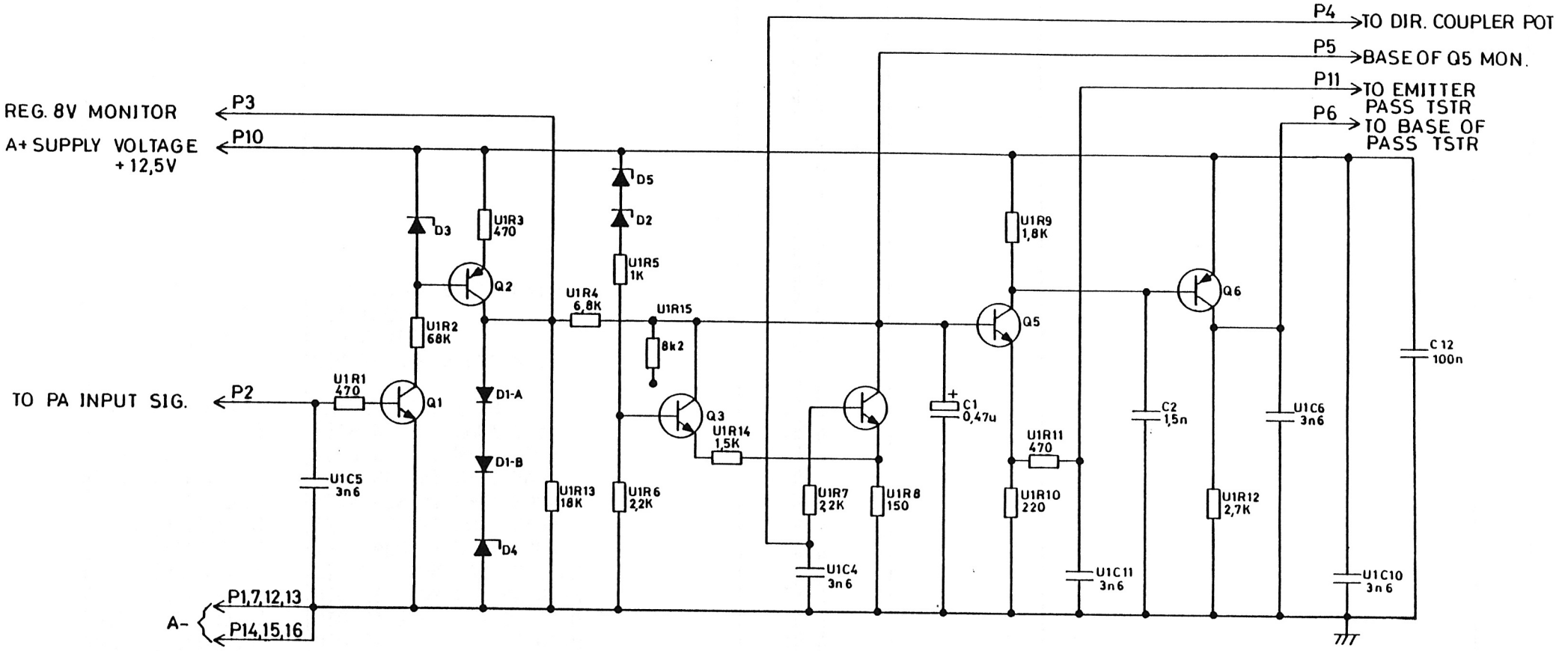

POWER CONTROL PC903

19D900111G1 D402.928/3

DATE: 8/ 3/1987

Pos	Code No	Description	Qt
C001	A700045P16	CAP TA SOL U4720V	1
C002	A700011P4	CAP CER CL2 1N5 20%	1
C012	A700009P5	CAP CER CL2 100N 20%	1
D001	A700053P1	DIO SI SIG BAV 99	1
D002	A700083P6	DIO SI ZENR 10V 5% 0.2W	1
D003	A700083P1	DIO SI ZENR 4V7 5% 0.2W	1
D004	A700083P4	DIO SI ZENR 6V8 5% 0.2W	1
D005	A700083P4	DIO SI ZENR 6V8 5% 0.2W	1
Q001	A700076P1	TSTR NPN SI MMBT 3904	1
Q002	A700059P1	TSTR PNP SI MMBT 3906	1
Q003	A700076P1	TSTR NPN SI MMBT 3904	1
Q004	A700076P1	TSTR NPN SI MMBT 3904	1
Q005	A700076P1	TSTR NPN SI MMBT 3904	1
Q006	A701509P1	TSTR PNP SI MMBT 2907	1
U001	D900110G1R1	INT CKT THK FILM	1
		NON ELECTRONICAL PARTS	0
	A701611G1	CAN COATED	1
	M905917P1	RETAINER	1
	J707469P1	LEAD FRAME A=9.5 B=1.0	

Pos	Code No	Description	Qt

Storno

PL961

INJECTION SIGNAL SOURCE

The injection signal for the mixer is generated by a phase locked loop module.

PL961 covers the 381-449 MHz band, corresponding to the receiver input frequency band 403-470 MHz.
The loop is locked to an 11-21 MHz channel synthesizer.

The module consists of a printed wiring board and 3 micromodules, the MX961, the PD901, and the XO.

MX901 and PD901 are soldered in. The XO is a plug-in type.

The Voltage Controlled Oscillator (VCO) is working at the output frequency and is an LC Clapp oscillator with a dual gate MOS-FET as the active element. The tuning coil is a piece of 90 ohm transmission line shorter than a quarter wavelength at the highest frequency. The transmission line transforms the tuning capacitor, which is used for the main frequency setting, into an equivalent inductance. The voltage tuning is done by two varicap diodes placed across the tuned circuitry.

The VCO is followed by a broadband buffer stage for achieving adequate output level, and it isolates the VCO from its load. From the output of the buffer a portion of the signal is fed to the isolation amplifier. The buffer is followed by a lowpass filter which removes the harmonic contents of the signal.

The isolation amplifier feeds the injection frequency (F_o) to the mixer and prevents the reference frequency (F_r) from entering the VCO circuit. The amplifier consists of two broadband, untuned stages, of which the first stage is placed on the p.w.b. along with the VCO and the second stage is placed in the mixer micromodule. The total isolation is approximataly 80 dB.

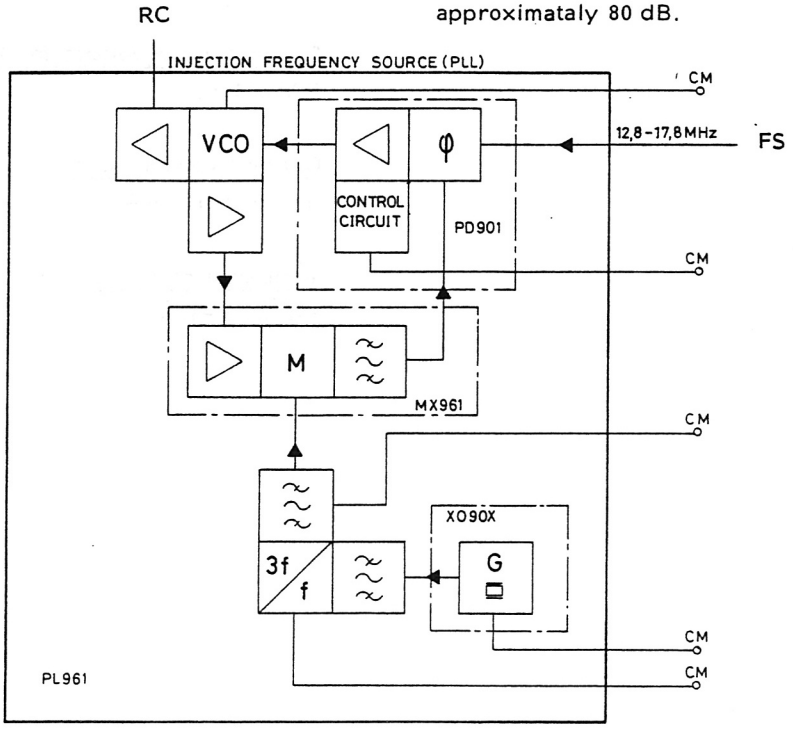

CM = CENTRAL METERING

The PLL Mixer micromodule (MX961) contains a J-FET mixer, a bandpass filter, and a part of the isolation amplifier.

The mixer has two inputs, F_o and F_r, both broadband and approx. 100 MHz wide. To achieve a high signal-to-noise ratio in the loop, the mixer is driven with high signal levels (F_o = +7 dBm and F_r = -6 dBm). The bandwidth of the mixer output is determined by the bandpass filter which removes the harmonics, and is approx. 10 MHz wide (11-21 MHz).

The Phase Comparator micromodule (PD901) compares two signals in the 11-21 MHz band, one from the PLL mixer and one from the channel synthesizer. The output from the phase comparator is fed to an amplifier through a loop filter. The amplifier produces the tuning control voltage (2-5.5 V) for the varicap diodes in the VCO.
The phase comparator actually consists of two detectors, a phase detector and a frequency detector. If the loop is out of lock, the frequency detector will activate a search oscillator, a ramp generator, and switch off the loop filter. When the mixer signal is within the capture range of the frequency detector, the ramp generator stops and the loop filter is switched on. Then the loop is locked and the phase detector is comparing the two signals. Most of the comparator circuitry is contained in a custom designed integrated circuit. The micromodule has two metering points, one for checking the lock function and one for measuring the tuning voltage to the VCO.

TECHNICAL SPECIFICATIONS

All specifiactions at 25°C.

Input frequency
11 to 21 MHz

Input Level
-1 dB/+3 dB

Impedance
50 ohm

Output frequency
381 - 449 MHz

Output level
+10 to +13 dBm

Power supply voltage
9 V ±5%

Power supply voltage for XO only
9 V ± 0.5%

Current consumption
less than 150 mA

Temperature range
-40°C to +85°C

Storno

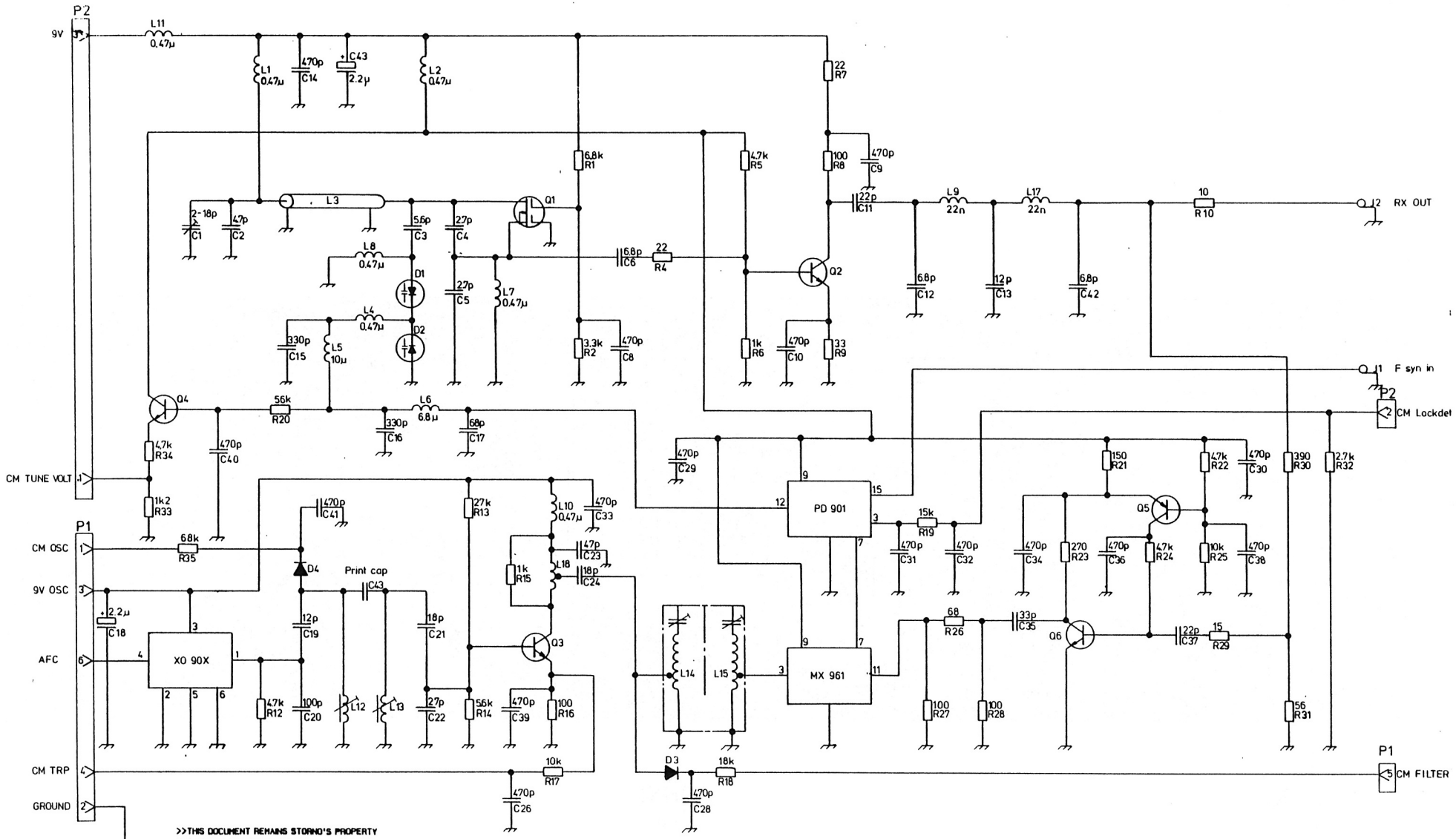

>>THIS DOCUMENT REMAINS STORNO'S PROPERTY AND STORNO RESERVES ALL RIGHTS IN RESPECT TO THIS DOCUMENT. WITHOUT STORNO'S WRITTEN PERMISSION THE CONTENTS OF THE DOCUMENT MUST NOT BE IMPARTED TO A THIRD PARTY NOR BE USED FOR ANY UNAUTHORIZED PURPOSE<<

RX PHASE LOCKED LOOP PL961

REV.B CODE NO.M905002G1 D402.942/5

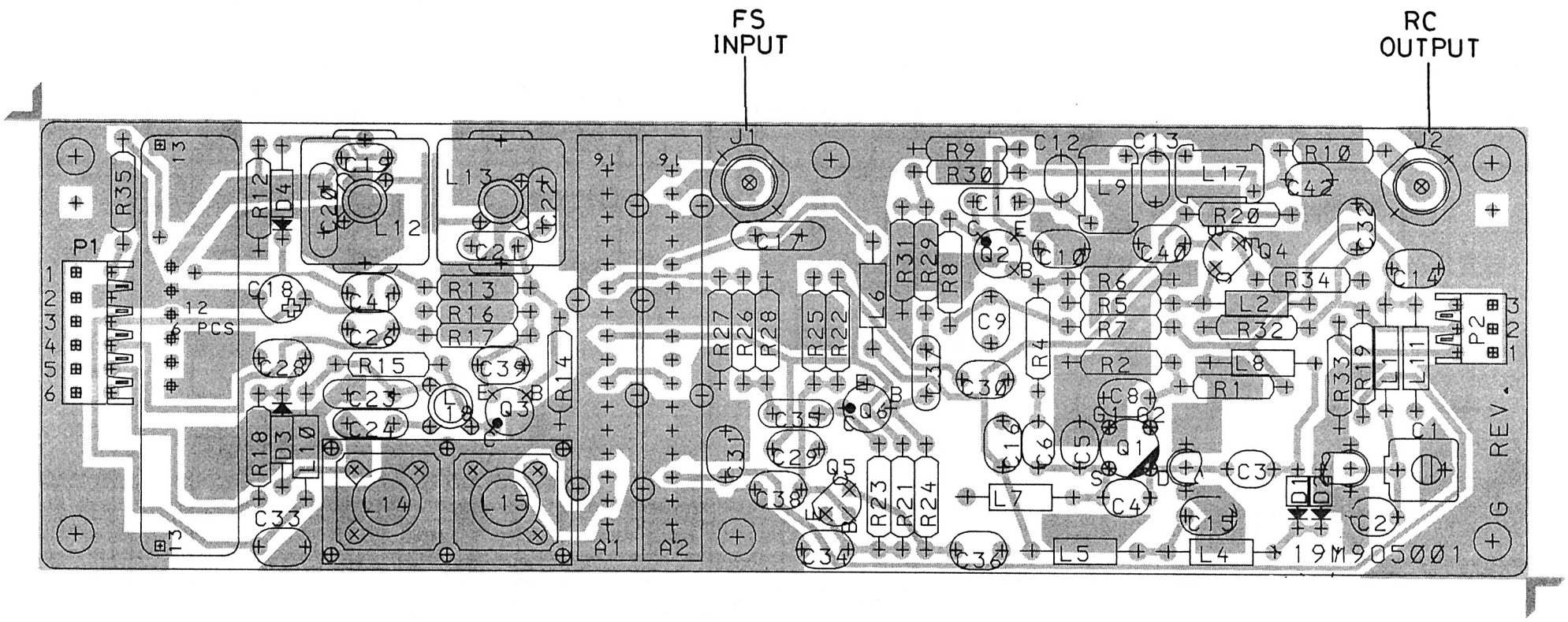

RX PLL PL961
COMPONENT LAYOUT

M905002G1 | D402.975/4

Pos.	Code No.	Description	Qt.
A001	M905061G1	MIXER MX 961	1
A002	M905011G1	PD 901	1
C001	J706003P2	CAP VAR FILM 2.0/18P 200V	1
C002	A700235P9	CAP CER N150 4P7.25P 50V	1
C003	A700235P10	CAP CER N150 5P6.25P 50V	1
C004	A700235P6	CAP CER N150 2P7.25P 50V	1
C005	A700235P6	CAP CER N150 2P7.25P 50V	1
C006	A700235P11	CAP CER N150 6P8.25P 50V	1
C008	A700233P5	CAP CER CL2 470P 20% 50V	1
C009	A700233P5	CAP CER CL2 470P 20% 50V	1
C010	A700233P5	CAP CER CL2 470P 20% 50V	1
C011	A700235P17	CAP CER N150 22P 5% 50V	1
C012	A700235P11	CAP CER N150 6P8.25P 50V	1
C013	A700235P14	CAP CER N150 12P 5% 50V	1
C014	A700233P5	CAP CER CL2 470P 20% 50V	1
C015	A700233P4	CAP CER CL2 330P 20% 50V	1
C016	A700233P4	CAP CER CL2 330P 20% 50V	1
C017	A700235P23	CAP CER N150 68P 5% 50V	1
C018	A700003P5	CAP TA SOL 2U2 20% 35V	1
C019	A700235P14	CAP CER N150 12P 5% 50V	1
C020	A700235P25	CAP CER N150 100P 5% 50V	1
C021	A700235P16	CAP CER N150 18P 5% 50V	1
C022	A700235P18	CAP CER N150 27P 5% 50V	1
C023	A700235P21	CAP CER N150 47P 5% 50V	1
C024	A700235P16	CAP CER N150 18P 5% 50V	1
C026	A700233P5	CAP CER CL2 470P 20% 50V	1
C028	A700233P5	CAP CER CL2 470P 20% 50V	1
C029	A700233P5	CAP CER CL2 470P 20% 50V	1
C030	A700233P5	CAP CER CL2 470P 20% 50V	1
C031	A700233P5	CAP CER CL2 470P 20% 50V	1
C032	A700233P5	CAP CER CL2 470P 20% 50V	1
C033	A700233P5	CAP CER CL2 470P 20% 50V	1
C034	A700233P5	CAP CER CL2 470P 20% 50V	1
C035	A700235P19	CAP CER N150 33P 5% 50V	1
C036	A700233P5	CAP CER CL2 470P 20% 50V	1
C037	A700235P17	CAP CER N150 22P 5% 50V	1

Storno

Pos.	Code No.	Description	Qt.
C038	A700233P5	CAP CER CL2 470P 20% 50V	1
C039	A700233P5	CAP CER CL2 470P 20% 50V	1
C040	A700233P5	CAP CER CL2 470P 20% 50V	1
C041	A700233P5	CAP CER CL2 470P 20% 50V	1
C042	A700235P11	CAP CER N150 6P8.25P 50V	1
D001	J706007P1	DIO SI CAP BB 505B	1
D002	J706007P1	DIO SI CAP BB 505B	1
D003	A700047P1	DIO SI SIG 2835	1
D004	A700047P1	DIO SI SIG 2835	1
J001	A700171P2	CONN PWB FEM PHONO	1
J002	A700171P2	CONN PWB FEM PHONO	1
L001	A700024P9	COIL RF FIX 0.47UH 10%	1
L002	A700024P9	COIL RF FIX 0.47UH 10%	1
L003	L855090G1	COIL COAX PL961/PL962	1
L004	A700024P9	COIL RF FIX 0.47UH 10%	1
L005	A700024P25	COIL RF FIX 10.0UH 10%	1
L006	A700024P23	COIL RF FIX 6.8UH 10%	1
L007	A700024P9	COIL RF FIX 0.47UH 10%	1
L008	A700024P9	COIL RF FIX 0.47UH 10%	1
L009	J706085P1	COIL RF FIX 2-1/2T	1
L010	A700024P9	COIL RF FIX 0.47UH 10%	1
L011	A700024P9	COIL RF FIX 0.47UH 10%	1
L012	J706083P8	COIL RF VAR 3,5T	1
L013	J706083P8	COIL RF VAR 3,5T	1
L014	J706154P2	COIL RF FIX 7-1/2T TAP	1
L015	J706154P2	COIL RF FIX 7-1/2T TAP	1
L017	J706085P1	COIL RF FIX 2-1/2T	1
L018	J706083P7	COIL RF VAR 3,5T TAP	1
P001	A700041P5	CONN PWB FEM 06 CKT	1
P002	A700041P2	CONN PWB FEM 03 CKT	1
Q001	J706019P1	TSTR MFET SI BF 960	1
Q002	J706011P1	TSTR NPN SI BFR 91	1
Q003	J706011P1	TSTR NPN SI BFR 91	1
Q004	A700017P1	TSTR NPN SI BC 548A/B	1
Q005	A700020P1	TSTR PNP SI BC558A/B	1
Q006	J706011P1	TSTR NPN SI BFR 91	1

Storno

Pos.	Code No.	Description	Qt.
R001	A700019P47	RES DEPC 6K8 5% 1/4W	1.
R002	A700019P43	RES DEPC 3K3 5% 1/4W	1
R004	A700019P17	RES DEPC 22R 5% 1/4W	1
R005	A700019P45	RES DEPC 4K7 5% 1/4W	1
R006	A700019P37	RES DEPC 1KO 5% 1/4W	1
R007	A700019P17	RES DEPC 22R 5% 1/4W	1
R008	A700019P25	RES DEPC 100R 5% 1/4W	1
R009	A700019P19	RES DEPC 33R 5% 1/4W	1
R010	A700019P13	RES DEPC 10R 5% 1/4W	1
R012	A700019P45	RES DEPC 4K7 5% 1/4W	1
R013	A700019P54	RES DEPC 27K 5% 1/4W	1
R014	A700019P46	RES DEPC 5K6 5% 1/4W	1
R015	A700019P37	RES DEPC 1KO 5% 1/4W	1
R016	A700019P25	RES DEPC 100R 5% 1/4W	1
R017	A700019P49	RES DEPC 10K 5% 1/4W	1
R018	A700019P52	RES DEPC 18K 5% 1/4W	1
R019	A700019P51	RES DEPC 15K 5% 1/4W	1
R020	A700019P58	RES DEPC 56K 5% 1/4W	1
R021	A700019P27	RES DEPC 150R 5% 1/4W	1
R022	A700019P45	RES DEPC 4K7 5% 1/4W	1
R023	A700019P30	RES DEPC 270R 5% 1/4W	1
R024	A700019P45	RES DEPC 4K7 5% 1/4W	1
R025	A700019P49	RES DEPC 10K 5% 1/4W	1
R026	A700019P23	RES DEPC 68R 5% 1/4W	1
R027	A700019P25	RES DEPC 100R 5% 1/4W	1
R028	A700019P25	RES DEPC 100R 5% 1/4W	1
R029	A700019P15	RES DEPC 15R 5% 1/4W	1
R030	A700019P32	RES DEPC 390R 5% 1/4W	1
R031	A700019P22	RES DEPC 56R 5% 1/4W	1
R032	A700019P42	RES DEPC 2K7 5% 1/4W	1
R033	A700019P45	RES DEPC 4K7 5% 1/4W	1
R034	A700019P38	RES DEPC 1K2 5% 1/4W	1
R035	A700019P59	RES DEPC 68K 5% 1/4W	1
0003	A700069P1	CAN	2
0004	K805050P1	CSTG HEL	1
0005	J706109P1	SCREW TUNING	2

Pos.	Code No.	Description	Qt.
0006	J706110P1	SPG TUN	2
0009	M905001P1R6	BD PW	1
0011	J706281P2	CORE SCREW FERR U 10	2
0012	A701329P2	CONN PWB MALE L11.69MM	6
0013	A700090P4	CONTACT	2

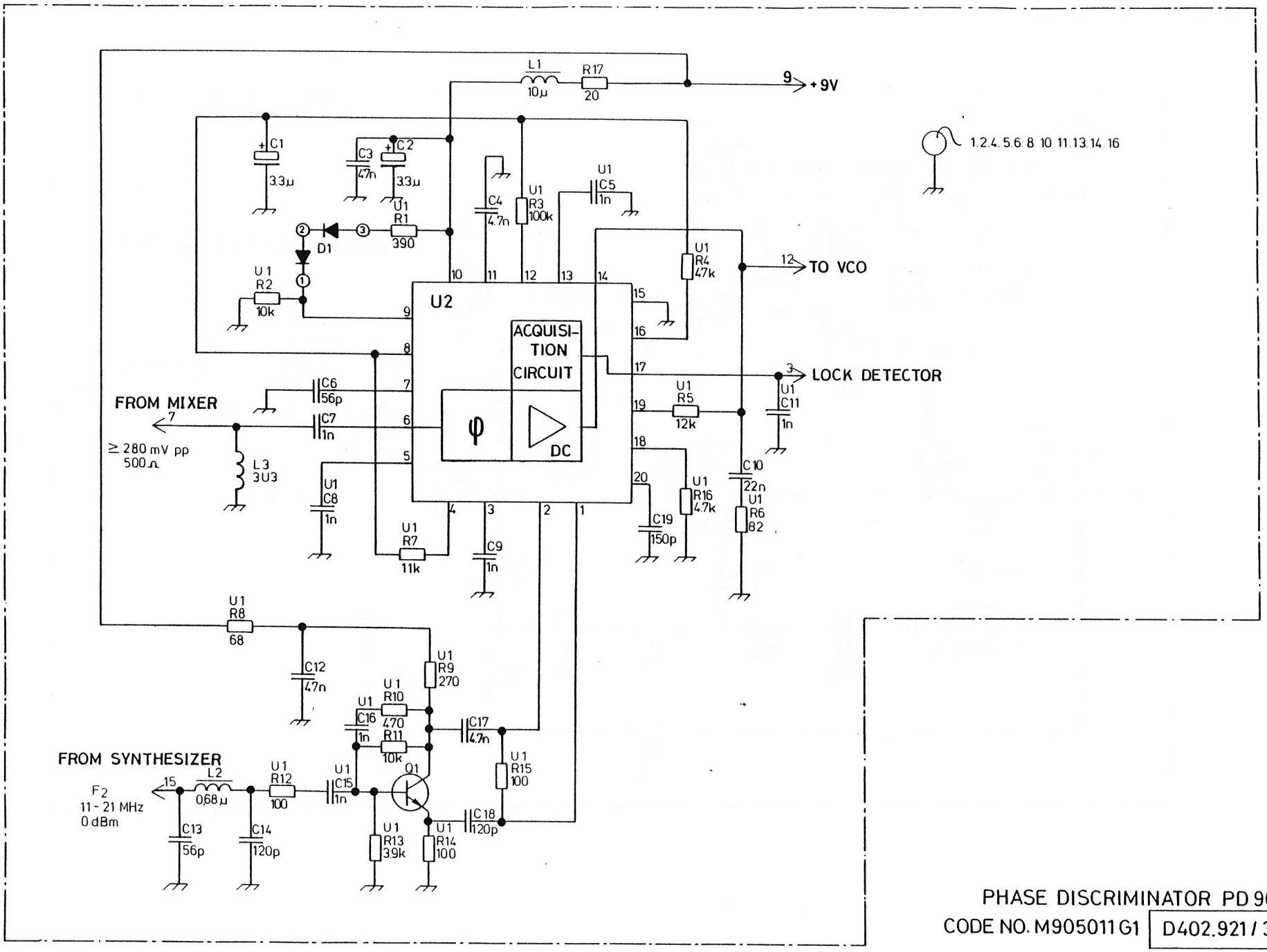

PHASE DISCRIMINATOR PD 901

CODE NO. M905011 G1 | D402.921 / 3

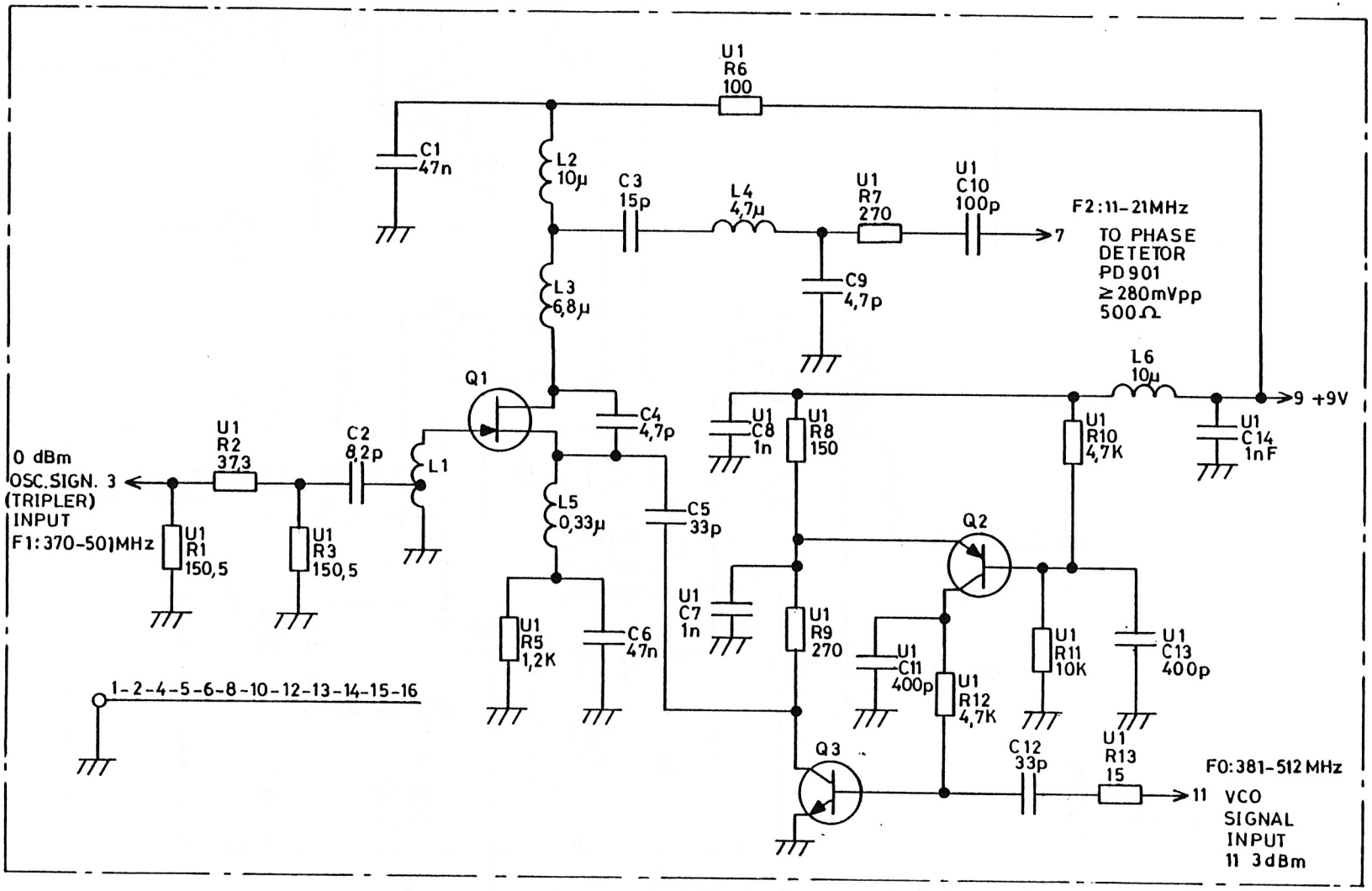

MIXER CIRCUIT MX961

19M905061G1 D402.919/3

Storno

PL962

TRANSMITTER SIGNAL SOURCE

PL962 is used for the 403-470 MHz band. It generates the modulated signal for the PA module.

The Phase Locked Loop module consists of an voltage controlled oscillator (VCO), a buffer amplifier, RA962, a PA driver, RA961, a mixer, MX961, a phase detector, PD901, an oscillator, a frequency tripler, and an audio processor AA901/902. Furthermore the module contains some logic function circuits, and has several central metering points for testing and adjusting the module.

The circuit is almost identical to the receiver PLL module (PL961), and for a detailed description refer to the receiver description. However, compared to the PL961 module, the PL962 has three additional micromodules and some control logic, which are described in the following.

The transmitter PA driver, RA961, is a two-stage broadband amplifier for the 403-470 MHz band. It drives the PA stages via a harmonic filter placed on the p.w.b. The module has a central metering point for measuring the output level. It is soldered in.

The buffer amplifier, RA962, contains a broadband amplifier which follows the VCO, and the first stage of the isolation amplifier. The second stage is placed in the mixer micromodule, refer to PL961. It is soldered in.

The control logic is placed on the p.w.b. and prevents the transmitter from being keyed when the PLL circuit, or the Frequency Synthesizer is out of lock.

The audio processor micromocule, AA901 is for use in 20/25 kHz equipment and AA902 is for use in 12.5 kHz equipment. It contains a

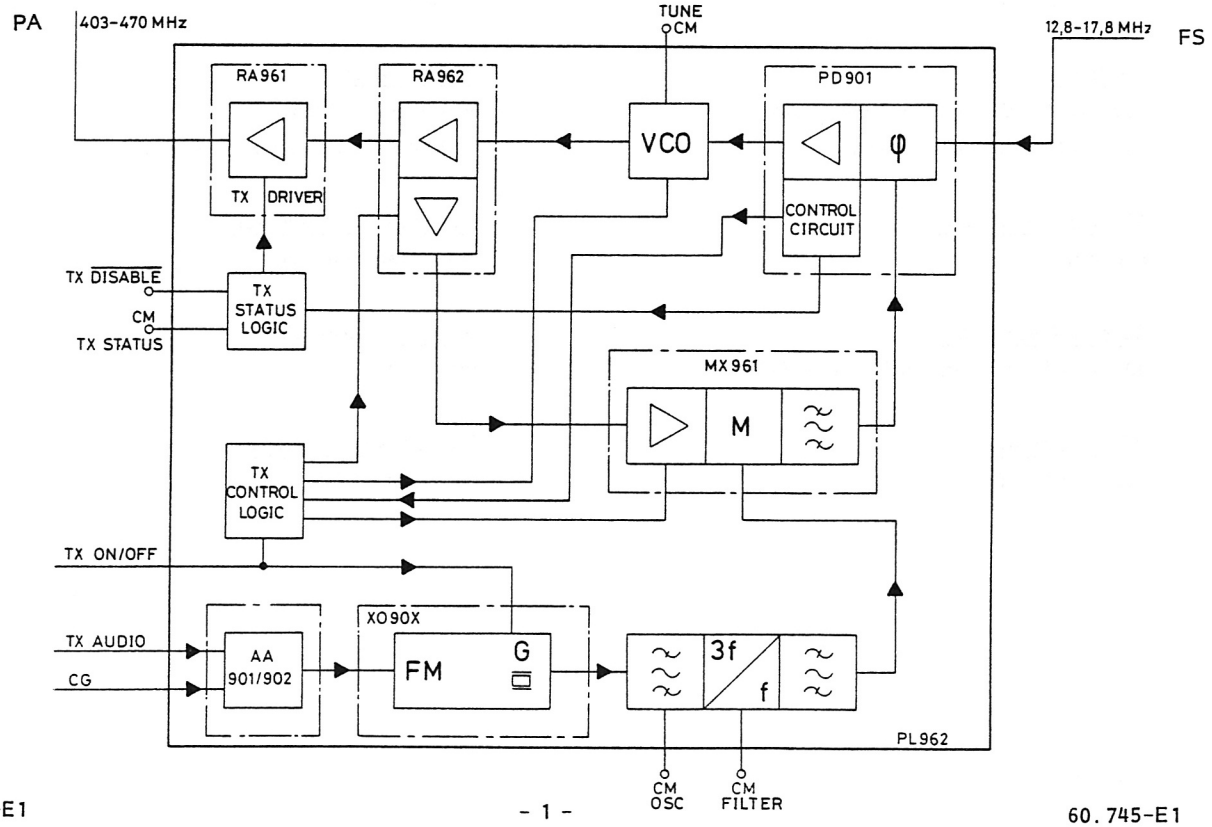

pre-emphasis circuit, an audio amplifier, a limiter, a channel guard level control, and two roll-off filters. The circuitry shapes the audio properly to produce a phase-modutated carrier when used in conjunction with a frequency modulated oscillator, and limits the deviation to be within the values required by the authorities. An audio input is provided prior to the pre-emphasis and limiting circuits, and a channel guard tone input is provided after these circuits.

The microphone bias is provided via the TX Audio pin.

The audio micromodule which is a plug-in type utilizes a quad-op-amp to provide the necessary gain. The microphone signal is fed to the first amplifier through a passive pre-emphasis network to achieve a rising audio characteristic which is needed with the true FM oscillator. The oscillator thus produces a phase-modulated type of signal.
Limiting diodes are used to ensure that the second amplifier is not being overdriven.

The second amplifier performs the actual audio limiting by using biased diodes in the feedback network. If the audio signals exceed a pre-set level these diodes will conduct and prevent any further increase of the output.

After the limiter, the signal passes a roll-off filter which prevents interference on ajacent channels by limiting the audio frequencies above 3 kHz. This filter is an active type and utilizes the other two op-amps contained in the IC.

Channel Guard signals are applied before the roll-off filter and their amplitude must be adjusted separately to produce the correct modulation.

TECHNICAL SPECIFICATIONS

CG input level
300 mV ±2 dB

AF input
100 mV ±2 dB with preemphasis
Δf: 3 kHz, Δf mod: 1 kHz

AF input impedance
600 ohm

Output frequency
403-470 MHz (bandwidth 10 MHz)

RF output level
+25 to +27 dBm

RF impedance
50 ohm

Power supply
Voltage: 9 V ±5%
Voltage for XO only: 9 V ±0.5%

Current consumption
less than 300 mA

AF distortion EIA
max. 2%

Temperature range
$-40^{o}C$ to $+85^{o}C$

Storno

Storno

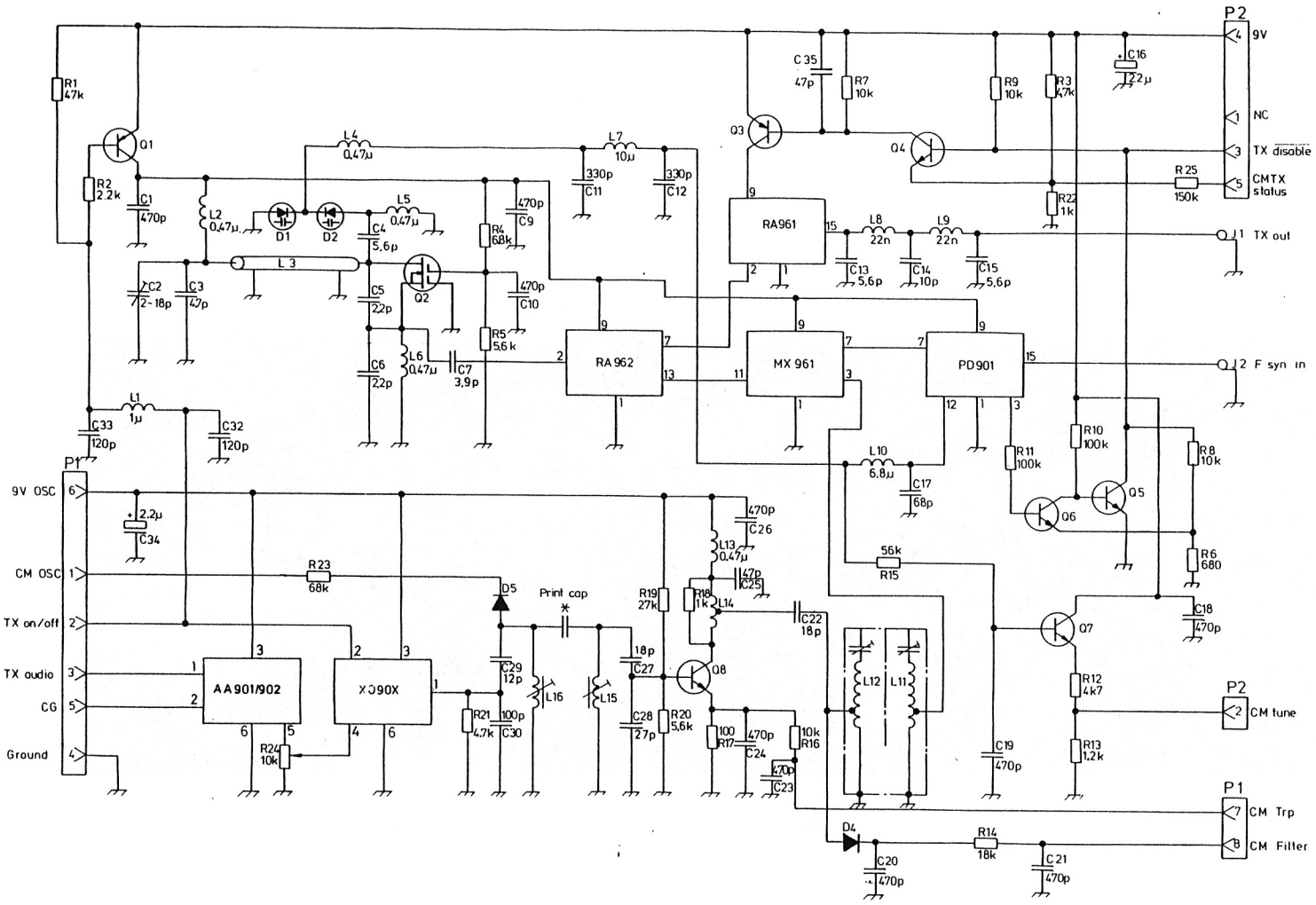

TX PHASE LOCKED LOOP PL962

CODE NO.M905003G1 D402.974/4

Storno

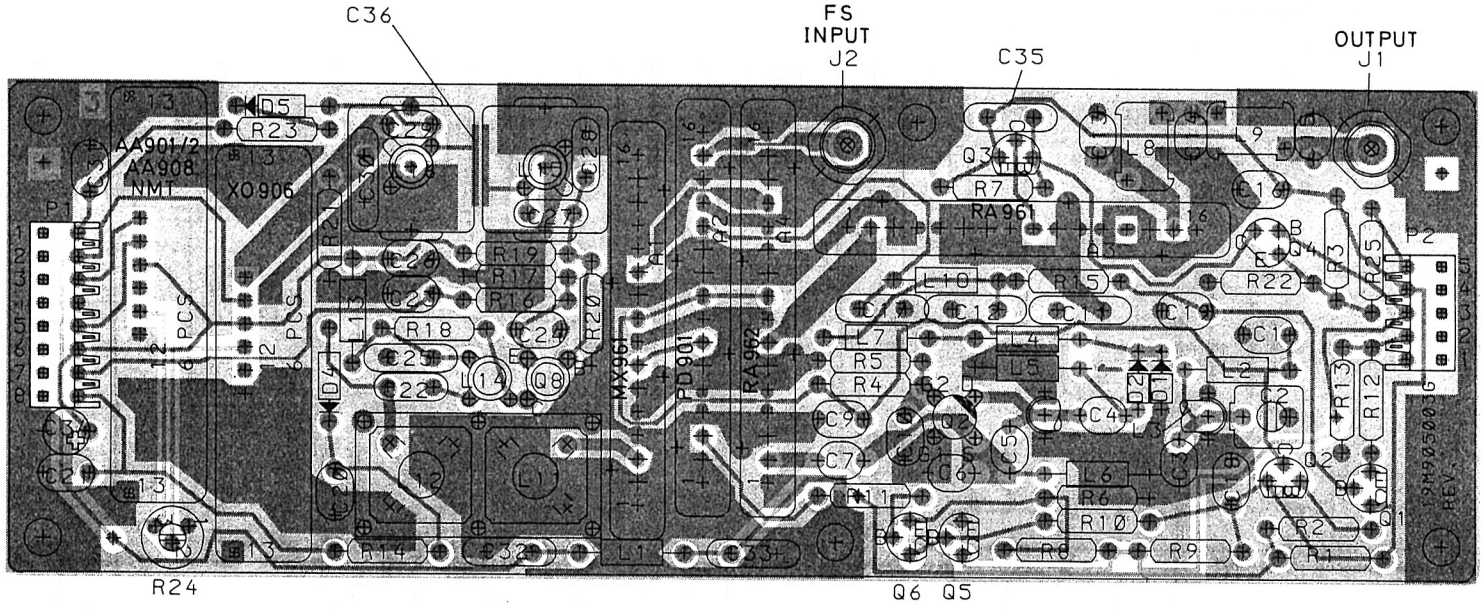

TX PLL PL962/965
COMPONENT LAYOUT

PL962 :19M905003G1
PL965 :19M905003G2

D402. 976 /2

ITEM NUMBER	DESCRIPTION
M905003G1	PL 962, F. 966X
* M905003G3	* PL 952, F. 955X

P A R T S L I S T :

CIRCUIT POSITION	COMPONENT ITEM NUMBER	COMPONENT DESCRIPTION	QUANTITY	
		HYBRID MODULES:		
A001	M905061G1	MX 961 , MIXER	1	ALL
A002	M905011G1	PD 901 , PHASE DETECTOR	1	ALL
A003	M905057G1	RA 961 , RF AMPLIFIER	1	ALL
A004	M905059G1	RA 962 , RF AMPLIFIER	1	ALL
		CPNT BOARD:		
C001	A700233P5	CAP CER CL2 470P 20% 50V	1	ALL
C002	J706003P2	CAP VAR 2.0/18PF 200V	1	ALL
C003	A700235P9	CAP CER N150 4P7 .25P 50V	1	ALL
C004	A700235P10	CAP CER N150 5P6 .25P 50V	1	F.:-G1
* C004	* A700235P12	* CAP CER N150 8P2 .25P 50V	* 1	F.:-G3
C005	A700235P5	CAP CER N150 2P2 .25P 50V	1	F.:-G1
* C005	* A700235P8	* CAP CER N150 3P9 .25P 50V	* 1	F.:-G3
C006	A700235P5	CAP CER N150 2P2 .25P 50V	1	F.:-G1
* C006	* A700235P8	* CAP CER N150 3P9 .25P 50V	* 1	F.:-G3
C007	A700235P8	CAP CER N150 3P9 .25P 50V	1	ALL
C009	A700233P5	CAP CER CL2 470P 20% 50V	1	ALL
C010	A700233P5	CAP CER CL2 470P 20% 50V	1	ALL
C011	A700233P4	CAP CER CL2 330P 20% 50V	1	ALL
C012	A700233P4	CAP CER CL2 330P 20% 50V	1	ALL
C013	A700235P10	CAP CER N150 5P6 .25P 50V	1	ALL
C014	A700235P13	CAP CER N150 10PF 5% 50V	1	ALL
C015	A700235P10	CAP CER N150 5P6 .25P 50V	1	ALL
C016	* A701534P5	CAP TA SOL 2U2 20% 35V	1	ALL
C017	A700235P23	CAP CER N150 68PF 5% 50V	1	ALL
C018	A700233P5	CAP CER CL2 470P 20% 50V	1	ALL
C019	A700233P5	CAP CER CL2 470P 20% 50V	1	ALL
C020	A700233P5	CAP CER CL2 470P 20% 50V	1	ALL
C022	A700235P16	CAP CER N150 18PF 5% 50V	1	ALL
C023	A700233P5	CAP CER CL2 470P 20% 50V	1	ALL
C024	A700233P5	CAP CER CL2 470P 20% 50V	1	ALL
C025	A700235P21	CAP CER N150 47P 5% 50V	1	ALL
C026	A700233P5	CAP CER CL2 470P 20% 50V	1	ALL
C027	A700235P16	CAP CER N150 18PF 5% 50V	1	F.:-G1
* C027	* A700235P18	* CAP CER N150 27PF 5% 50V	* 1	F.:-G3
C028	A700235P18	CAP CER N150 27P 5% 50V	1	F.:-G1
* C028	* A700235P20	* CAP CER N150 39P 5% 50V	* 1	F.:-G3
C029	A700235P14	CAP CER N150 12PF 5% 50V	1	F.:-G1

	CIRCUIT POSITION		COMPONENT ITEM NUMBER		COMPONENT DESCRIPTION		QUANTITY	
*	C029	*	A700235P16	*	CAP CER N150 18PF 5% 50V	*	1	F.:-G3
	C030		A700235P25		CAP CER N150 100PF 5% 50V		1	ALL
	C032		A700235P26		CAP CER N150 120PF 5% 50V		1	ALL
	C033		A700235P26		CAP CER N150 120PF 5% 50V		1	ALL
	C034		A700003P5		CAP TA SOL 2U2 20% 35V		1	ALL
	C035		A700235P21		CAP CER N150 47P 5% 50V		1	ALL
	D001		J706007P1		DIO SI CAP BB 505B		1	ALL
	D002		J706007P1		DIO SI CAP BB 505B		1	ALL
	D004		A700047P1		DIO SI SIG 2835		1	ALL
	D005		A700047P1		DIO SI SIG 2835		1	ALL
	J001		A700171P2		CONNECTOR COAX		1	ALL
	J002		A700171P2		CONNECTOR COAX		1	ALL
	L001		A700024P13		COIL FIX 1,0 UH 10%		1	ALL
	L002		A700024P9		RF COIL FIX 470 NH 10%		1	ALL
	L003		L855090G1		COIL COAX F. PL961/PL962		1	F.:-G1
*	L003	*	L855090G3	*	COIL COAX F. PL951/PL952	*	1	F.:-G3
	L004		A700024P9		RF COIL FIX 470 NH 10%		1	ALL
	L005		A700024P9		RF COIL FIX 470 NH 10%		1	ALL
	L006		A700024P9		RF COIL FIX 470 NH 10%		1	ALL
	L007		A700024P25		COIL FIX 10.0 UH 10%		1	ALL
	L008		J706085P1		COIL RF FIX 2-1/2T		1	ALL
	L009		J706085P1		COIL RF FIX 2-1/2T		1	ALL
	L010		A700024P23		COIL FIX 6.8 UH 10%		1	ALL
	L011		J706154P2		COIL RF FIX 7-1/2T TAP		1	F.:-G1
*	L011	*	J706154P10	*	COIL RF FIX 8-3/8T TAP	*	1	F.:-G3
	L012		J706154P2		COIL RF FIX 7-1/2T TAP		1	F.:-G1
*	L012	*	J706154P10	*	COIL RF FIX 8-3/8T TAP	*	1	F.:-G3
	L013		A700024P9		RF COIL FIX 470 NH 10%		1	ALL
	L014		J706083P7		COIL RF VAR 3,5T TAP		1	ALL
	L015		J706083P8		COIL RF VAR 3,5T		1	ALL
	L016		J706083P8		COIL RF VAR 3,5T		1	ALL
	P001		A700041P7		CONN PWB FEM 08 CKT		1	ALL
	P002		A700041P4		CONN PWB FEM 05 CKT		1	ALL
	Q001		A700026P1		TSTR PNP SI BC 369		1	ALL
	Q002		J706019P1		TSTR MFET SI BF 960		1	ALL
	Q003		A700026P1		TSTR PNP SI BC 369		1	ALL
	Q004		A700017P1		TSTR NPN SI BC 548A/B		1	ALL
	Q005		A700017P1		TSTR NPN SI BC 548A/B		1	ALL
	Q006		A700017P1		TSTR NPN SI BC 548A/B		1	ALL
	Q007		A700017P1		TSTR NPN SI BC 548A/B		1	ALL
	Q008		J706011P1		TSTR NPN SI BFR 91		1	ALL
	R001		A700019P57		RES DEPC 47K 5% 1/4W		1	ALL
	R002		A700019P41		RES DEPC 2K2 5% 1/4W		1	ALL
	R003		A700019P45		RES DEPC 4K7 5% 1/4W		1	ALL
	R004		A700019P47		RES DEPC 6K8 5% 1/4W		1	ALL
	R005		A700019P46		RES DEPC 5K6 5% 1/4W		1	ALL
	R006		A700019P35		RES DEPC 680R 5% 1/4W		1	ALL
	R007		A700019P49		RES DEPC 10K 5% 1/4W		1	ALL

CIRCUIT POSITION	COMPONENT ITEM NUMBER	COMPONENT DESCRIPTION	QUANTITY	
R008	A700019P49	RES DEPC 10K 5% 1/4W	1	ALL
R009	A700019P49	RES DEPC 10K 5% 1/4W	1	ALL
R010	A700019P61	RES DEPC 100K 5% 1/4W	1	ALL
R011	A700019P61	RES DEPC 100K 5% 1/4W	1	ALL
R012	A700019P45	RES DEPC 4K7 5% 1/4W	1	ALL
R013	A700019P38	RES DEPC 1K2 5% 1/4W	1	ALL
R014	A700019P52	RES DEPC 18K 5% 1/4W	1	ALL
R015	A700019P58	RES DEPC 56K 5% 1/4W	1	ALL
R016	A700019P49	RES DEPC 10K 5% 1/4W	1	ALL
R017	A700019P25	RES DEPC 100R 5% 1/4W	1	ALL
R018	A700019P37	RES DEPC 1K0 5% 1/4W	1	ALL
R019	A700019P54	RES DEPC 27K 5% 1/4W	1	ALL
R020	A700019P46	RES DEPC 5K6 5% 1/4W	1	ALL
R021	A700019P45	RES DEPC 4K7 5% 1/4W	1	ALL
R022	A700019P37	RES DEPC 1K0 5% 1/4W	1	ALL
R023	A700019P59	RES DEPC 68K 5% 1/4W	1	ALL
R024	A700016P4	RES VAR CERM 10K 10% 1/2W	1	ALL
R025	A700019P63	RES DEPC 150K 5% 1/4W	1	ALL
* 0002 *	M9-----P1R0	* BD PW., REVISION NO.:0		
0004	K805050P1	CSTG HEL	1	ALL
0005	A700069P1	CAN	2	ALL
0006	J706109P1	SCR TUN	2	ALL
0007	J706110P1	SPG TUN	2	ALL
0010	J706281P2	TUN SLUG,SCREWCORE,FERR U 10	2	ALL
0011	A701329P2	CONN. PW., MALE, L=11.69MM *	12	ALL
0012	A700090P4	CONTACT	4	ALL

Storno

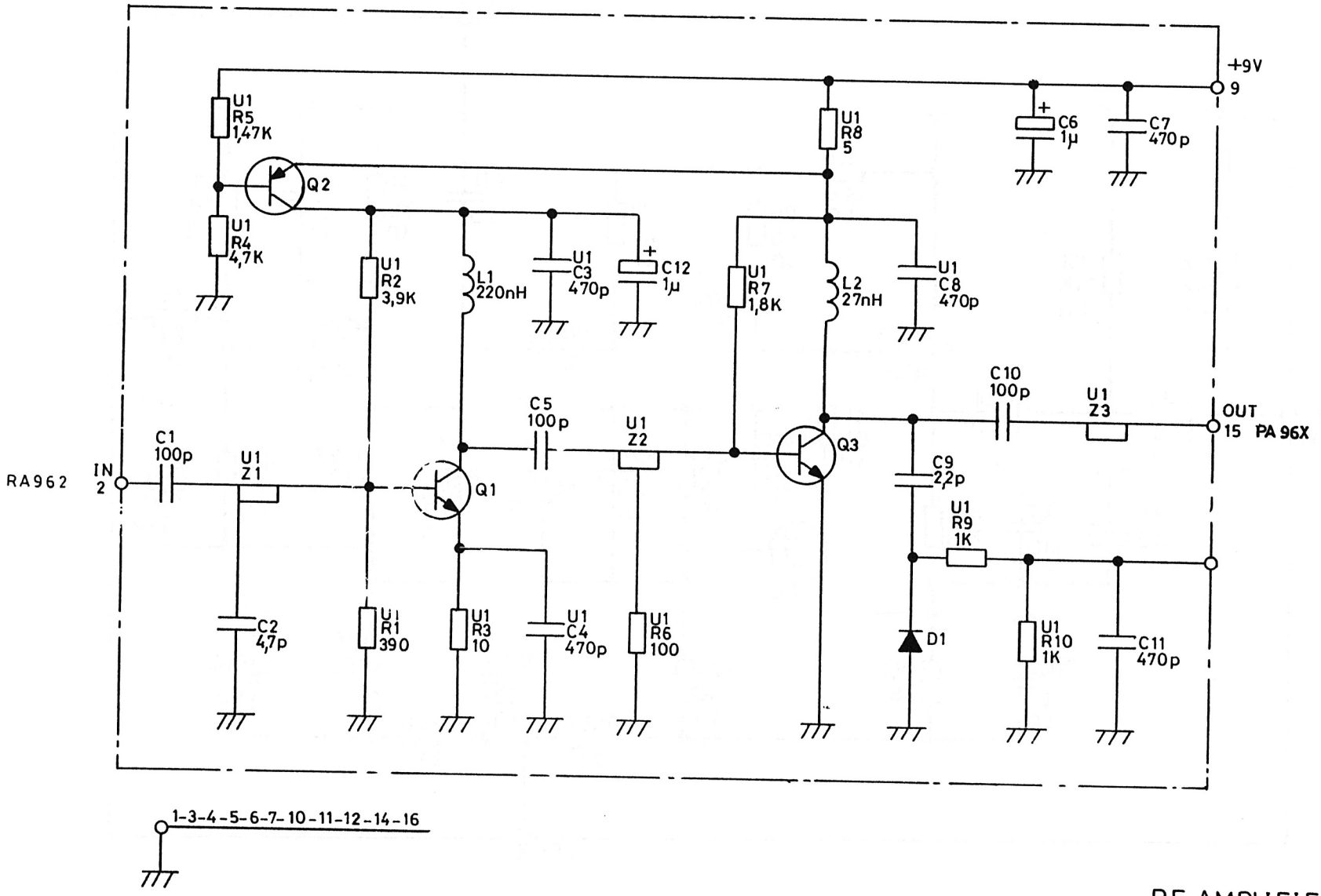

RF AMPLIFIER RA961

19M905057G1 D402.920/2

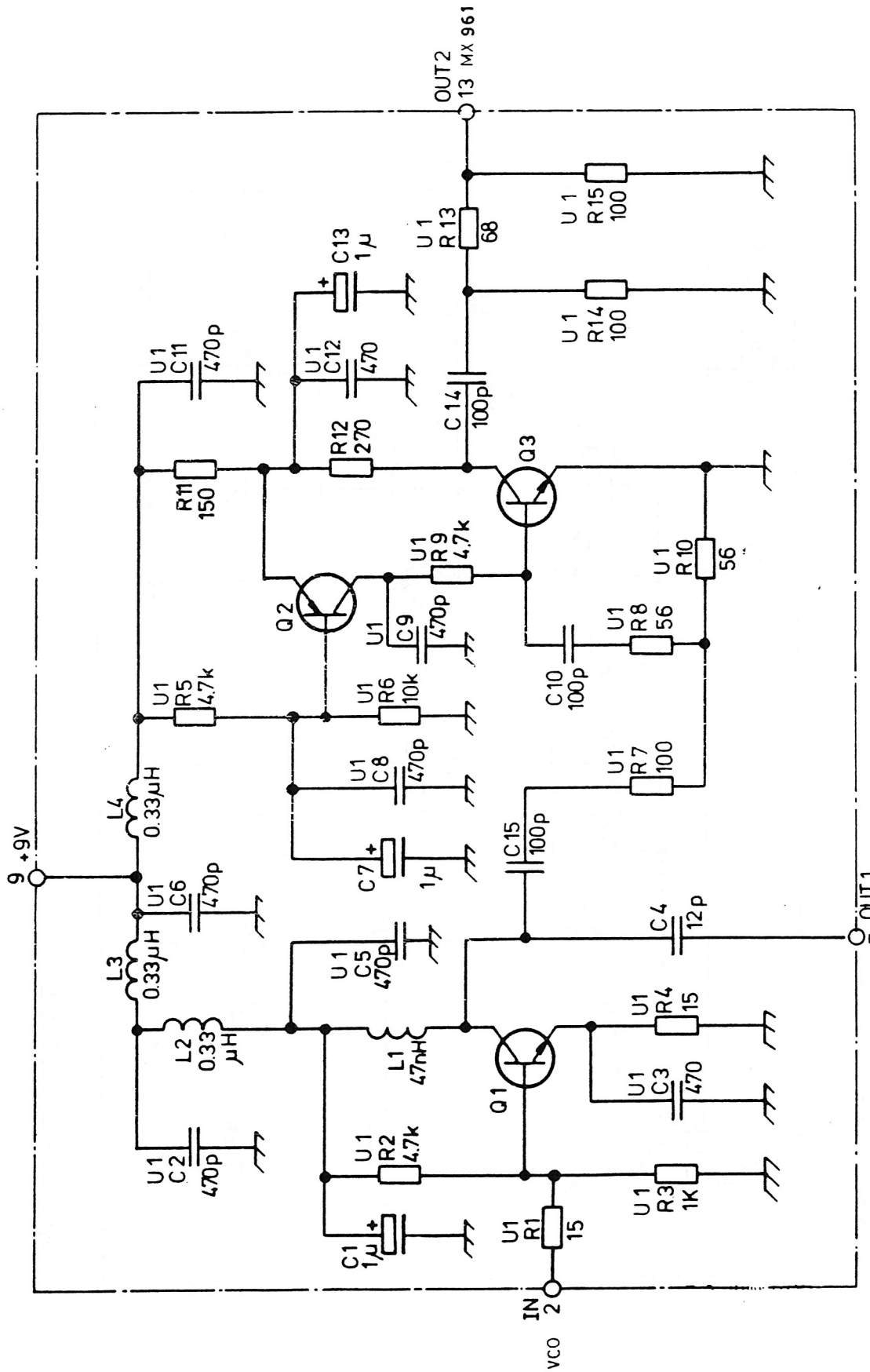

RF AMPLIFIER RA962

19M905059G1 D403 078/2

Storno

PS907

POWER SUPPLY

PS907 is a switch-mode power supply unit for use in Stornophone F9xxx, fixed-/base radio stations. If converts 220 V/110 V AC to 13.2 V/ 11 A, 5 V/2 A and -5 V/50 mA DC.
The PS907 interfaces the base station to the mains and can be strapped for 220 V AC or 110 V AC operation.
It withstands continuous short circuits on all outputs and overloads for a shorter period of time.
An indication of input power failure is provided.

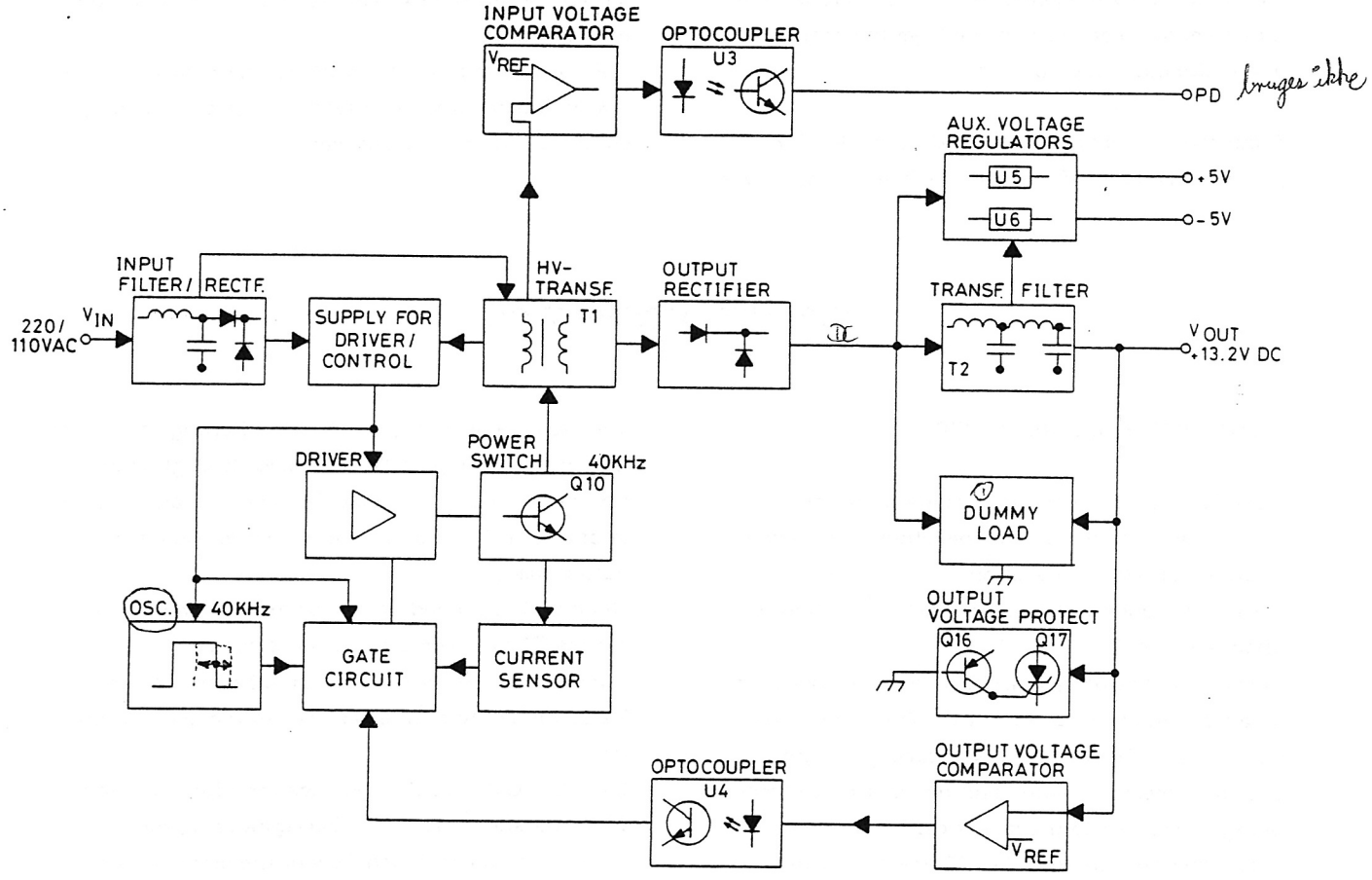

BLOCK DIAGRAM PS907
D403.950/ 2

① SØRGER FOR KONSTANT BELASTNING AF TRANSFILTER GÅR DER IKKE STRØM I FILTER OPRETTES ±5V REGULATOREN IKKE

MODE OF OPERATION

The PS907 is a forward step down switch mode power supply operating directly from the rectified mains with a switching frequency of 40 kHz. Consult the block diagram.

The rectified mains is converted to approximately 27 V AC in the power converter consisting of the high voltage transformer, switching transistor, driver/control circuits and the 40 kHz oscillator. The 27 V AC is rectified and filtered in a LC-filter to obtain 13.2 V DC at the main output. A

circuit senses the main output voltage and sends information via an opto-coupler to the control circuit, which controls the duty cycle of the power switch.

The voltage sense- and control circuits will hold the main output voltage constant, within specified limits of input voltage and load.

A circuit senses the input voltage and sends information via an opto-coupler to the P.D. output in case of input power failure.

A stabilized supply voltage for the driver/control/oscillator circuits is obtained via the supply circuit from the transformer, or from the rectified mains during start-up.

A current sensor reduces the duty cycle of the power converter, if the current limit in the power switch is exceeded. Thus the power supply is protected against overload and short circuit.

An over voltage protection circuit short circuits the main output, thus activating the current limiter, if the main output voltage exceeds 16 V.

Auxiliary voltages (+5 V and -5 V) are obtained from secondary windings on the output filter/transformer via rectifiers and voltage stabilizers with built-in overload protections.

A dummy load circuit is activated, maintaining a certain minimum current through the output transformer, when the external load of the main output is descreased.
This prevents auxiliary voltages from dropping at low or interrupted main loads, without reducing efficiency at heavy main loads.

CIRCUIT DESCRIPTION

INPUT FILTER AND RECTIFIER

Rectification of the mains is made in either a bridge rectifier for 220 V operation or a voltage doubler for 110 V operation.
By inserting a single jumper, W1, operation is changed from 220 V to 110 V.
In this way the power switch is always operating on a voltage close to 300 V DC. The input filter C1, L1, C2, C6, C7, C8 takes care of damping of spikes from the mains and prevent noise from being conducted to the mains cable. R1 limits the peak start current and C4, C5 are resorvoire capacitors for the rectified mains. The capacitors are able to hold the voltage within the operating limits of the power converter during one missing period from the mains.

POWER CONVERTER AND TRANSFORMERS

The power converter is basically a forward step down type utilizing the flyback principle to provide auxiliary voltages. While switching transistor Q10 is on, energy is transformed through transformer T1, rectifier diode D8 conducts and energy is stored in T2 and also delivered to the main output load.
When Q10 is turned off the polarity of the voltage across T1 is reversed and D8 is cut off.
During turn off flywheel diode D9 conducts and T2 continues to deliver energy to the main output load.
C18, L2, C19 and C20 reduces the ripple caused by transistor switching. Demagnetizing diode D7 ensures a continued flow of the magnetizing current while Q10 is off, thus leading the stored magnetic energy in T1 back to the reservoire Capacitors.
When all energy stored in T1 is removed, a new cycle can begin without risk of transformer saturation leading to excess current spikes. As the number of turns of the primary and recovery windings of T1 are equal, the duty cycle must be kept below 0.5 to ensure safe operation.
Auxiliary voltages are obtained from the energy

stored in T2 at the end of transistor conduction (flyback principle). When transistor Q10 is cut off, the voltage across the primary of T2 is, ideally, equal to the main output voltage.

Therefore, if the main output voltage is statilized, the secondary voltages will also be stabilized.

This, however, requires that a certain amount of current is always flowing through the primary of T2, which is ensured by the dummy load. Leakage between the primary and secondary windings of T2 affects load regulation of the secondary voltages to some extent, and therefore further stabilization of the auxiliary voltages has been provided.

Q10 is driven as a nonsaturated switch by means of the clamp diodes D14 and D15. Excess of current are delivered to Q10, when it is turned on and off, by Q8, Q9, R50, R51 and C30.

START CIRCUIT

To start the PS907 the mains supply voltage is switched on causing C12 to be charged through R13.
When the voltage across C12 reaches approx. 16 volts the voltage stabilizer Q1, Q2, Q3, D5 is switched on, supplying 10 V DC to the driver, control and oscillator circuits, and the power converter is started. Once the converter is running, power to these circuits (app. 150 mA) is taken from the drive winding of transformer T1 via rectifier diode D6 and the voltage stabilizer.

POWER FAILURE INDICATION

When the power converter is running the voltage across C12 is proportional to the rectified mains voltage.
The voltage across C12 is sensed by the comperator U1. 4. When the rectified mains voltage becomes lower than app. 82% of the nominal value, corresponding to app. 11.5 volts across C12, the comperator output goes low and the opto-coupler U3 is cut off.

The power converter is able to hold the output voltages constant down to app. 70% of the nominal input voltage. This, together with the size of the reservoire capacitors, ensures that the output voltages are held constant, even at full load, for at least 10 ms after the power down transition, when the mains supply voltage is switched off.

MAIN OUTPUT VOLTAGE REGULATION

The power converter is driven via transistor Q7 from a pulse width modulated 40 kHz oscillator. The main output voltage is compared to the reference voltage across zenerdiode D18 in transistor Q14. The output of Q14 is fed back to the regulation circuit via opto-coupler U4 to control the duty cycle.
The oscillator formed by comperators U1.1 and U1.2 is running at 40 kHz with a duty cycle of 0.45.

Frequency and duty cycle are determined by R18, R19, R20, R24, R22 and C22. The output of U1.1 is inverted in U1.2 and compared to the sawtooth voltage across C22 in comparator U1.3. By pulling down the output voltage of U1.2, the duty cycle can be varied between 0 and 0.45 on the output of U1.3.
This limitation of the maximum duty cycle ensures safe operation of the switch transistor Q10, even if regulation fails. At start up C23 is charged through R25, D12 and R27 causing the duty cycle to encrease slowly from 0 to the final value determined by the voltage regulator.

AUXILIARY VOLTAGE REGULATION

The auxiliary voltages +5 V/2 A and -5 V/50 mA, obtained from the secondary windings of transformer T2 via rectifiers D10 and D11, are stabilized by the fixed voltage regulators U5 and U6 also providing short circuit and overload protection of the auxillary outputs.
The input voltages of these circuits must be greater than app. 7.5 volts at full auxiliary loads. For the +5 V/2 A regulator U5 this can only be ensured with a minimum current of app. 1.2 Amps

flowing through the primary of T2, which is achieved by means of the dummy load Q12, Q13, controlled by transistor Q11 and zenerdiode D17. At external main loads greater than app. 1.2 Amps the input voltage of U5 will always be greater than 7.5 volts, so that Q11 is conducting, Q12 and Q13 are cut off and no power is dissipated in the dummy load.
With little or no external main load the input voltage of U5 tends to drop below 7.5 volts when the +5 V output is loaded, so that Q11 is cut off, Q12 and Q13 are conducting and a current, limited to app. 1.2 Amps by R59 and zenerdiode D19, is flowing through the dummy load maintaining the minimum input voltage of the +5 V regulator.

CURRENT LIMIT CIRCUIT

The current through the switch transistor Q10 is sensed by the comperators U2.3 and U2.4 via R53 and the filter R47, C29, which prevents inductive transients from accidentally shutting the regulator down.
In order to provide fold back current limitation, with automatic reset to full load when the short circuit is removed, two trigger levels of emitter current are employed.
If the maximum output load of 11 A is increased further comperator U2.4 is triggered when the pulsed emitter current exceeds app. 2.53 Amps. This immediately discharges capacitor C24 and triggers comperator U2.2, which is used as a "one shot" multivibrator to cut off the rest of the duty cycle by pulling the base of Q7 low. Positive AC feedback via R40, C27 is used to ensure that C24 is completely discharged. When Q10 is cut off U2.4 is reset and C24 recharged through R33. The time constant C24, R33 together with R31 and R32 determines the off time (app. 13 us) of comperator U2.2, so that Q10 remains off for the rest of the period. Thus, by increasing the load, the output current is kept almost constant at app. 12 Amps, while the output voltage is dropping, until a point is reached where the on time cannot be decreased further (app. 2 us) due to internal delays in the switch transistor and control system.
If the load is increased further the emitter current rises and triggers comperator U2.3 at a level of app. 3.00 Amps.
This immediately discharges capacitor C25 and triggers comperator U2.1 which is used similar to U2.2 but with a different time constant.
The output of U2.1 also discharges C23 via transistor Q6. The result is that the converter is stopped for app. 10 ms followed by a soft restart. Restart is attempted every 10 ms until the overload or short circuit is removed from the output, which will reestablish normal operation. This arrangement gives a maximum overload current of app. 15 Amps and a short circuit current of app. 2 Amps on the main output.

Note: If the main output is short circuited the auxiliary voltages will drop without any previous warning.

OVERVOLTAGE PROTECTION

The main output is protected against excessive voltages by the circuit Q15, Q16, Q17. The main output voltage is compared to the reference voltage across D20 in transistor Q15. If the voltage exceeds 15.5 volts thyristor Q17 is triggered via Q16 and short circuits the main output, thereby activating the current limiter.

SPECIFICATIONS

INPUT VOLTAGE

Mains
220 V RMS +20% -15% at 40-60 Hz or
110 V RMS +20% -15% at 40-60 Hz

Max transients
800 V RMS <100 us

Mains failure condition

Output voltage remains within specified limits, with input voltage at lower limit, during complete mains failure for one period. (20 ms at 50 Hz).

OUTPUT VOLTAGE

Nominal output

Main output:	13.2 V DC, maximum 11 A cont.
Aux. output:	+5 V DC, maximum 2 A cont.
Aux. output:	-5 V DC, maximum 50 mA cont.

Ripple voltage

Main output:	<5 mV pk/pk
Aux. outputs:	<5 mV pk/pk

Short circuit protection

Main output:	Fold back current limit to app. 2 A at short circuit, with auto reset to normal operation at full load.
Aux. outputs:	Current limited.

All outputs withstands continuous short circuit

Over voltage protection

Main output short circuited if voltage exceeds 15.5 V.

Power failure indication

As an output signal. All output voltages are held within specified limits for at least 10 ms after the transition if the mains are switched off or accidentially interrupted.

Load change response

Main output:

Voltage drop at load change 0-11 A less than 1.0 V.

Voltage jump at load change 11-0 A less than 1.0 V.

Recovery times less than 0.5 sec.

Efficiency

Main output load 5-11 A, total efficiency $\geq$80%.

Efficiency decreasing continuously below 5 A.

Temperature range

$-25^{o}C/+70^{o}C$

Mechanical dimensions

Hight=	80 mm
Width=	274 mm
Depth=	150 mm
Volume:	app. 2.4 liters
Weight:	app. 2.1 kg

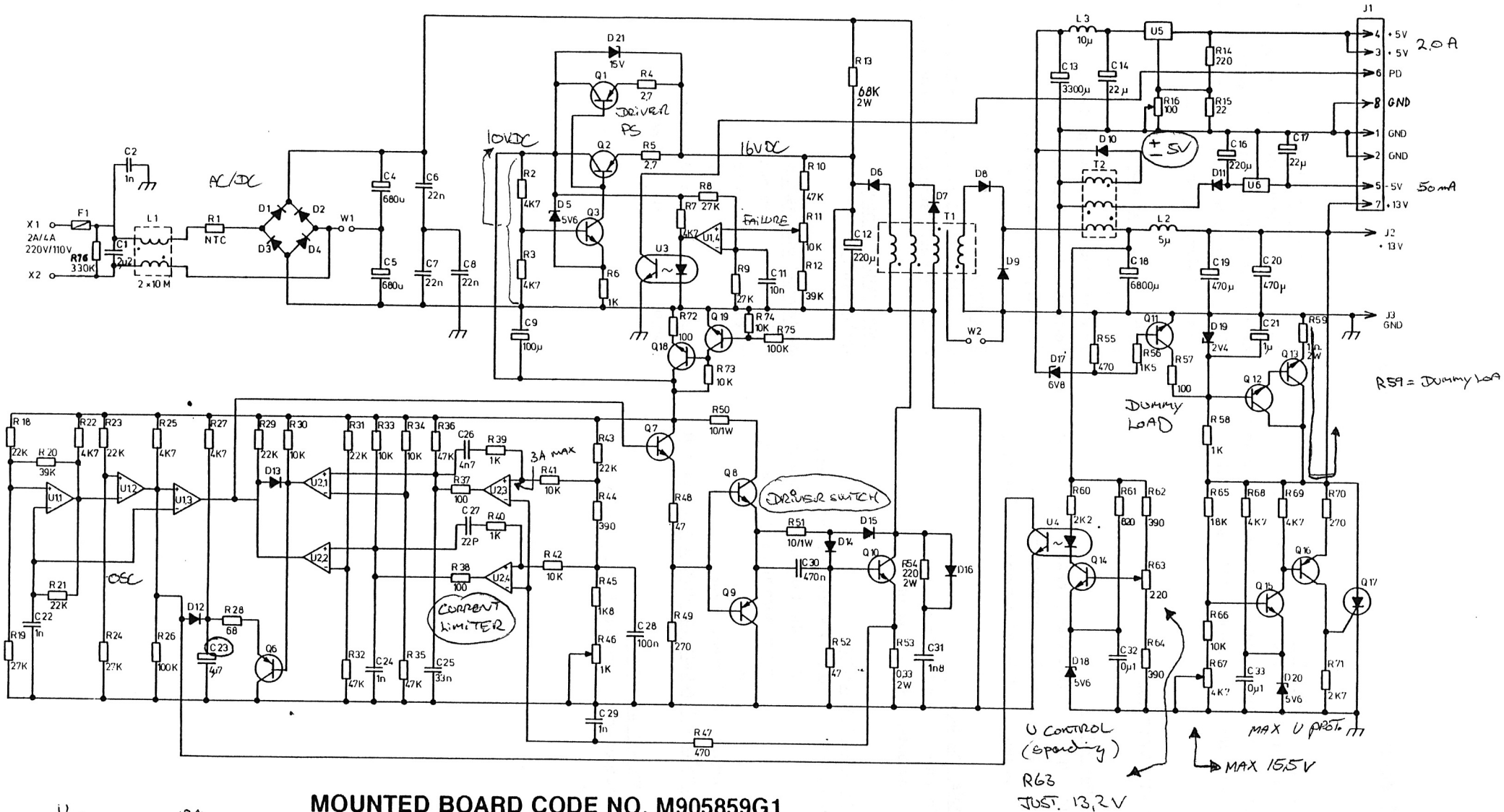

U
12A
i
2A

C23 either opstart

U24 (+PIN) AKTIVERET V/2,53A (PEAKS)
JUSTERES M/R46

MOUNTED BOARD CODE NO. M905859G1
MODULE CODE NO. L855742G1

POWER SUPPLY PS907
REV.E **D403.858/6**

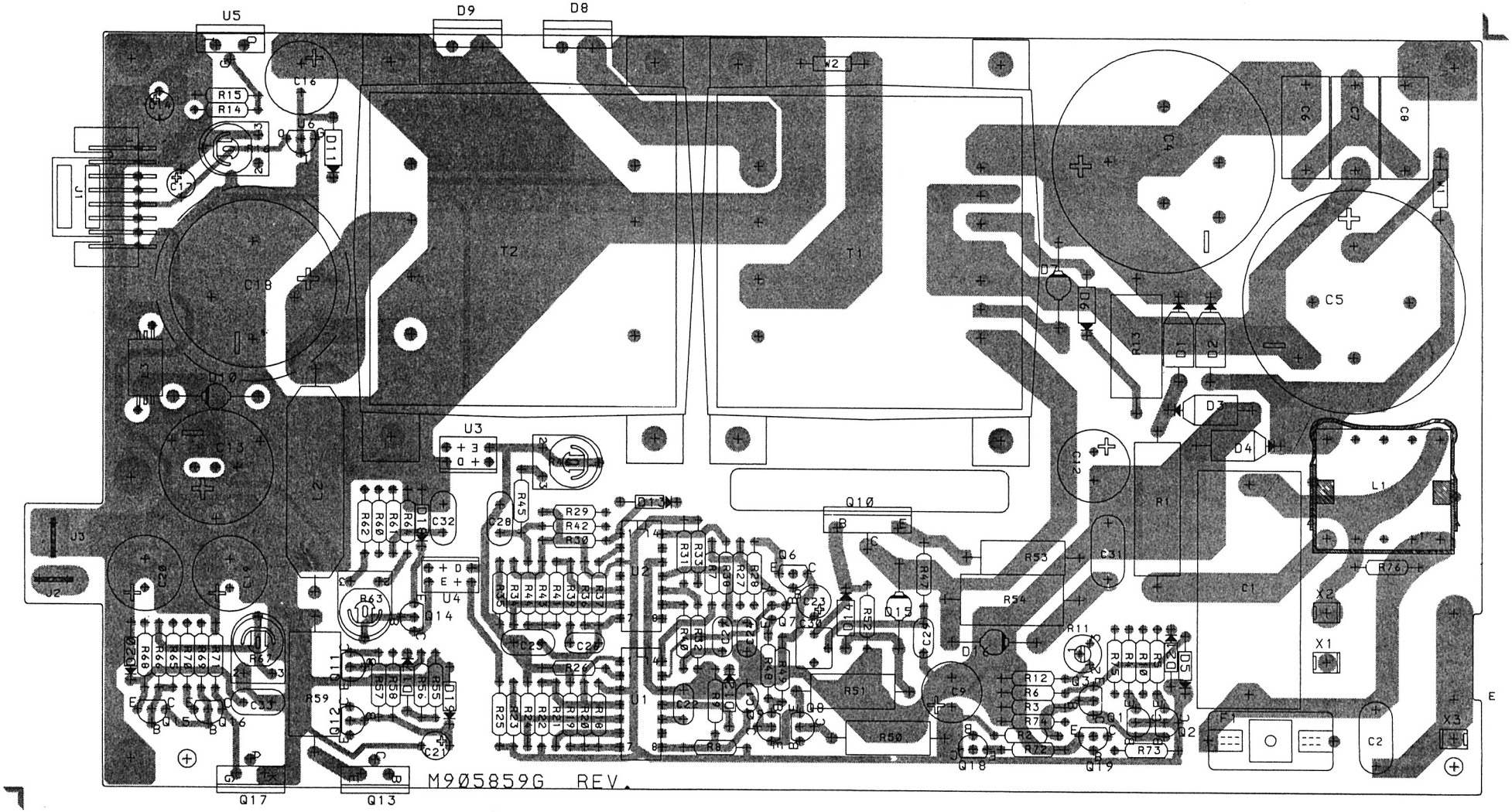

MOUNTED BOARD CODE NO. M905859G1
MODULE CODE NO. L855742G1

COMPONENT BOARD FOR PS907

D403.905/3

DATE: 10/12/1987

Pos	Code No	Description	Qt
A001	M905859G1	CPNT BD PW PS 907	1
F001	J706998P7	FUSE CTG 2.0A T	1
	A700242P15	SBSTRT PASS 30.00X39.00	1
	A701983P2	WASH NON MET 3.10X 6.00	5
	A700115P3	INS SHEET FOR TO-220	5
	J707015P2	CLAMP	1
	J706181P308	SCREW NYLON	1
	L855728G1	CAN ASM	1
	J706902P1	CLAMP	1
	L855757P1	INSULATION SHEET	1
	J707033P2	LABEL	1
	A700031P306	SCR PAN HD M-2.5X 6.0	2
	A700031P410	SCR PAN HD M-3.0X10.0	2
	A700031P406	SCR PAN HD M-3.0X 6.0	4
	A700031P408	SCR PAN HD M-3.0X 8.0	13
	A700034P4	NUT HEX M-3.0X0.50	5
A001	M905859G1	CNPT BD PW PS 907	1
C001	J706993P4	CAP PYES 2U2 10%	1
C002	J706995P1	CAP CER CL2 1N 20%	1
C004	J707002P3	CAP ELECT 680U 200	1
C005	J707002P3	CAP ELECT 680U 200	1
C006	J707940P1	CAP PAPER 22N 20%	1
C007	J707940P1	CAP PAPER 22N 20%	1
C008	J707940P1	CAP PAPER 22N 20%	1
C009	J706005P4	CAP ELECT 100U 16V	1
C011	A700234P7	CAP PYES 10N 10%	1
C012	J706005P10	CAP ELECT 220U 25V	1
C013	J706005P18	CAP ELECT 3M3 10V	1
C014	A701534P8	CAP TA SOL 22U 16V	1
C016	J706005P5	CAP ELECT 220U 16V	1
C017	A701534P8	CAP TA SOL 22U 16V	1
C018	J707002P4	CAP ELECT 6M8 16V	1
C019	J706005P6	CAP ELECT 470U 16V	1
C020	J706005P6	CAP ELECT 470U 16V	1

Pos	Code No	Description	Qt
C021	A701534P4	CAP TA SOL 1U 35V	1
C022	A700234P1	CAP PYES 1N0 10%	1
C023	A701534P6	CAP TA SOL 4U7 35V	1
C024	A700234P1	CAP PYES 1N0 10%	1
C025	A700234P10	CAP PYES 33N 10%	1
C026	A700234P5	CAP PYES 4N7 10%	1
C027	J706079P17	CAP CER NPO 22P 5%	1
C028	J707412P9	CAP PYES 100N 10%	1
C029	A700234P1	CAP PYES 1N0 10%	1
C030	J707412P13	CAP PYES 470N 10%	1
C031	J706995P3	CAP CER CL2 1N8 5020	1
C032	J707412P9	CAP PYES 100N 10%	1
C033	J707412P9	CAP PYES 100N 10%	1
D001	J706026P3	DIO SI PWR 1N5408	1
D002	J706026P3	DIO SI PWR 1N5408	1
D003	J706026P3	DIO SI PWR 1N5408	1
D004	J706026P3	DIO SI PWR 1N5408	1
D005	A700025P7	DIO SI ZENR 5V6 5% 0.4W	1
D006	J706282P1	DIO SI BYW 1N4933	1
D007	J707017P1	DIO SI PWR BYW 96D	1
D008	J706023P1	DIO SI PWR BYW 29-50	1
D009	J706023P1	DIO SI PWR BYW 29-50	1
D010	J708734P1	DIO SI PWR BYV 28-100	1
D011	J706282P1	DIO SI PWR 1N4933	1
D012	A700028P1	DIO SI SIG 1N4148	1
D013	A700028P1	DIO SI SIG 1N4148	1
D014	J706282P1	DIO SI PWR 1N4933	1
D015	J707017P1	DIO SI PWR BYW 96D	1
D016	J707017P1	DIO SI PWR BYW 96D	1
D017	A700025P8	DIO SI ZENR 6V8 5% 0.4W	1
D018	A700025P7	DIO SI ZENR 5V6 5% 0.4W	1
D019	A700025P18	DIO SI ZENR 2V4 5% 0.4W	1
D020	A700025P7	DIO SI ZENR 5V6 5% 0.4W	1
D021	A700025P12	DIO SI ZENR 15V 5% 0.4W	1
J001	J708068P108	CONN PWB MALE RECP 08-CKT	1
J002	J706683P1	CAP ELECT 470U 16V	1

DATE: 10/12/1987

Pos	Code No	Description	Qt
J003	J706683P1	TERM SPADE TAB6.3MM	1
L001	J708697G1	COIL ASM 2X10MH	1
L002	J708682P1	COIL RF FIX 5UH 20%	1
L003	J708732P1	COIL RF FIX 2-1/2T	1
00XF	J706903P1	FUSE HOLDER 5.0X20.0MM	1
Q001	J707435P1	TSTR PNP SI BC 369	1
Q002	J707435P1	TSTR PNP SI BC 369	1
Q003	J707511P1	TSTR NPN SI BC 548A/B	1
Q006	J707674P1	TSTR PNP SI BC 558A/B	1
Q007	J707511P1	TSTR NPN SI BC 548A/B	1
Q008	J707673P1	TSTR NPN SI BC 368	1
Q009	J707435P1	TSTR PNP SI BC 369	1
Q010	J710617P1	TSTR NPN SI SGSIV 48A	1
Q011	J707511P1	TSTR NPN SI BC 548A/B	1
Q012	J707511P1	TSTR NPN SI BC 548A/B	1
Q013	A700054P1	TSTR NPN SI BD 201	1
Q014	J707511P1	TSTR NPN SI BC 548A/B	1
Q015	J707511P1	TSTR NPN SI BC 548A/B	1
Q016	J707674P1	TSTR PNP SI BC 558A/B	1
Q017	J708735P1	THYRSTR SCR BT 151-500R	1
Q018	J707511P1	TSTR NPN SI BC 548A/B	1
Q019	J707511P1	TSTR NPN SI BC 548A/B	1
R001	J710616P1	RES THERM NTC 10R 25%	1
R002	A700019P45	RES DEPC 1/4W 4K7 5%	1
R003	A700019P45	RES DEPC 1/4W 4K7 5%	1
R004	A700019P6	RES DEPC 1/4W 2R7 5%	1
R005	A700019P6	RES DEPC 1/4W 2R7 5%	1
R006	A700019P37	RES DEPC 1/4W 1KO 5%	1
R007	A700019P45	RES DEPC 1/4W 4K7 5%	1
R008	A700019P54	RES DEPC 1/4W 27K 5%	1
R009	A700019P54	RES DEPC 1/4W 27K 5%	1
R010	A700019P57	RES DEPC 1/4W 47K 5%	1
R011	A700016P4	RES VAR CERM 10K 10%	1
R012	A700019P56	RES DEPC 1/4W 39K 5%	1
R013	J708692P3	RES MFLM2W 68K 5%	1
R014	A700019P29	RES DEPC 1/4W 220R 5%	1

Pos	Code No	Description	Qt
R015	A700019P17	RES DEPC 1/4W 22R 5%	1
R016	J706042P4	RES VAR DEPC 100R 20%	1
R018	A700019P53	RES DEPC 1/4W 22K 5%	1
R019	A700019P54	RES DEPC 1/4W 27K 5%	1
R020	A700019P56	RES DEPC 1/4W 39K 5%	1
R021	A700019P53	RES DEPC 1/4W 22K 5%	1
R022	A700019P45	RES DEPC 1/4W 4K7 5%	1
R023	A700019P53	RES DEPC 1/4W 22K 5%	1
R024	A700019P54	RES DEPC 1/4W 27K 5%	1
R025	A700019P45	RES DEPC 1/4W 4K7 5%	1
R026	A700019P61	RES DEPC 1/4W 100K 5%	1
R027	A700019P45	RES DEPC 1/4W 4K7 5%	1
R028	A700019P23	RES DEPC 1/4W 68R 5%	1
R029	A700019P53	RES DEPC 1/4W 22K 5%	1
R030	A700019P49	RES DEPC 1/4W 10K 5%	1
R031	A700019P53	RES DEPC 1/4W 22K 5%	1
R032	A700019P57	RES DEPC 1/4W 47K 5%	1
R033	A700019P49	RES DEPC 1/4W 10K 5%	1
R034	A700019P49	RES DEPC 1/4W 10K 5%	1
R035	A700019P57	RES DEPC 1/4W 47K 5%	1
R036	A700019P57	RES DEPC 1/4W 47K 5%	1
R037	A700019P25	RES DEPC 1/4W 100R 5%	1
R038	A700019P25	RES DEPC 1/4W 100R 5%	1
R039	A700019P37	RES DEPC 1/4W 1KO 5%	1
R040	A700019P37	RES DEPC 1/4W 1KO 5%	1
R041	A700019P49	RES DEPC 1/4W 10K 5%	1
R042	A700019P49	RES DEPC 1/4W 10K 5%	1
R043	A700019P53	RES DEPC 1/4W 22K 5%	1
R044	A700019P32	RES DEPC 1/4W 390R 5%	1
R045	A700019P40	RES DEPC 1/4W 1K8 5%	1
R046	J706008P1	RES VAR CERM 1K 20%	1
R047	A700019P33	RES DEPC 1/4W 470R 5%	1
R048	A700019P21	RES DEPC 1/4W 47R 5%	1
R049	A700019P30	RES DEPC 1/4W 270R 5%	1
R050	A700112P15	RES COMP 1/1W 10R 5%	1
R051	A700112P15	RES COMP 1/1W 10R 5%	1

DATE: 10/12/1987

Pos	Code No	Description	Qt
R052	A700019P21	RES DEPC 1/4W 47R 5%	1
R053	J708536P6	RES WW2W 0R33 10%	1
R054	J708692P1	RES MFLM2W 220R 5%	1
R055	A700019P33	RES DEPC 1/4W 470R 5%	1
R056	A700019P39	RES DEPC 1/4W 1K5 5%	1
R057	A700019P25	RES DEPC 1/4W 100R 5%	1
R058	A700019P37	RES DEPC 1/4W 1K0 5%	1
R059	J708536P9	RES WW2W 1R0 10%	1
R060	A700019P41	RES DEPC 1/4W 2K2 5%	1
R061	A700019P36	RES DEPC 1/4W 820R 5%	1
R062	A700019P32	RES DEPC 1/4W 390R 5%	1
R063	J706008P2	RES VAR CERM 220R 20%	1
R064	A700019P32	RES DEPC 1/4W 390R 5%	1
R065	A700019P52	RES DEPC 1/4W 18K 5%	1
R066	A700019P49	RES DEPC 1/4W 10K 5%	1
R067	J706008P8	RES VAR CERM 4K7 20%	1
R068	A700019P45	RES DEPC 1/4W 4K7 5%	1
R069	A700019P45	RES DEPC 1/4W 4K7 5%	1
R070	A700019P30	RES DEPC 1/4W 270R 5%	1
R071	A700019P42	RES DEPC 1/4W 2K7 5%	1
R072	A700019P25	RES DEPC 1/4W 100R 5%	1
R073	A700019P49	RES DEPC 1/4W 10K 5%	1
R074	A700019P49	RES DEPC 1/4W 10K 5%	1
R075	A700019P61	RES DEPC 1/4W 100K 5%	1
R076	J710370P3	RES MFLM 1/4W 330K 5%	1
T001	J708726P1	TRANSFORMER INVTR 160VA	1
T002	J708727P1	TRANSFORMER INVTR	1
U001	J706018P1	IC LIN CMPAR 3302	1
U002	J706018P1	IC LIN CMPAR 3302	1
U003	J707020P1	CPLR OPTO H24A1	1
U004	J707020P1	CPLR OPTO H24A1	1
U005	J708555P1	IC LIN VR FIX 78T05	1
U006	J708332P1	IC LIN VR FIX 79L05AC	1
X001	J706973P1	TERM SLD 2.3 SQ HOLE	1
X002	J706973P1	TERM SLD 2.3 SQ HOLE	1
X003	J706973P1	TERM SLD 2.3 SQ HOLE	1
	M905860P1R0	BD PW	1

Pos	Code No	Description	Qt

PS9011/PS9012

POWER SUPPLY MODULES

The power supply modules PS9011 and PS9012 are used with the CQF9000 series.
PS9011 is used for 24 V input voltage.
PS9012 is used for 48 V input voltage.

The housing is rugged and steady against hard environmental conditions. The power supply module is built on a single printing wiring board. The connectors for in and outputs are mounted directly on the board.

The push-pull switch mode circuitry principle is used for maximum efficiency and reliability.

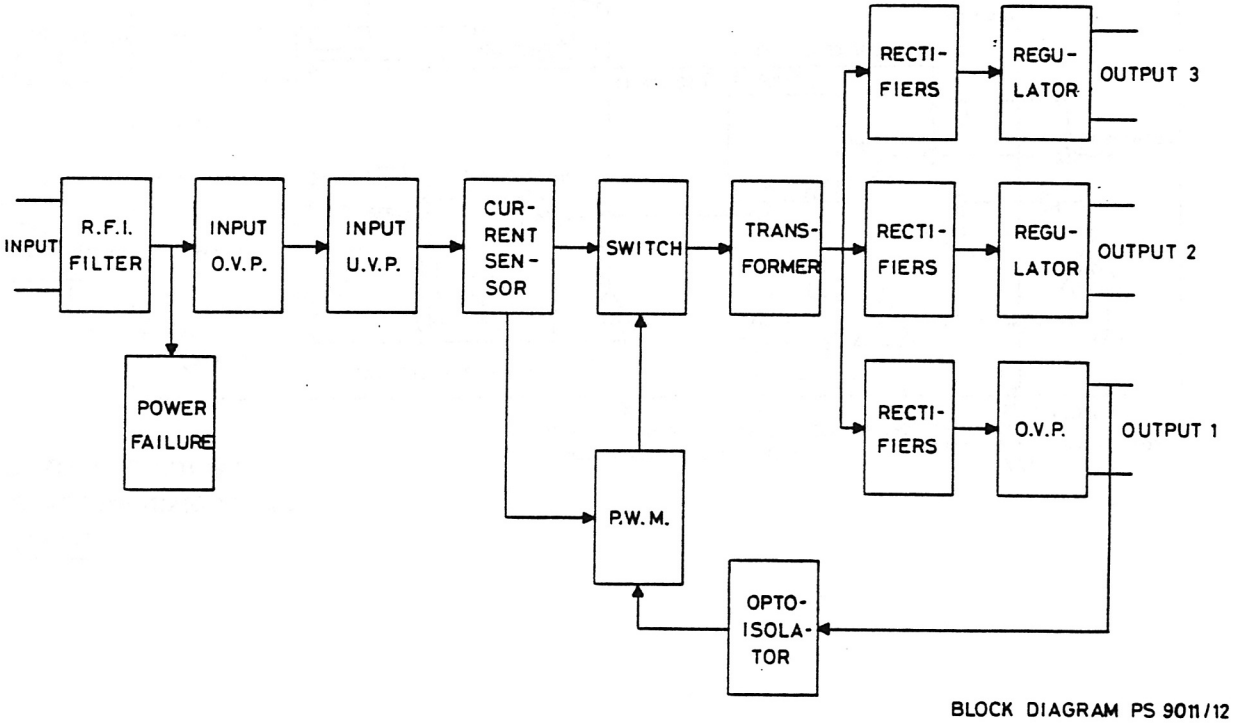

BLOCK DIAGRAM PS 9011/12

D404.854

The switch frequency is set to approx. 50 kHz. The integrated circuit Q1 operates as a switch control, while resistor R6 and capacitor C6 sets the switching frequency.

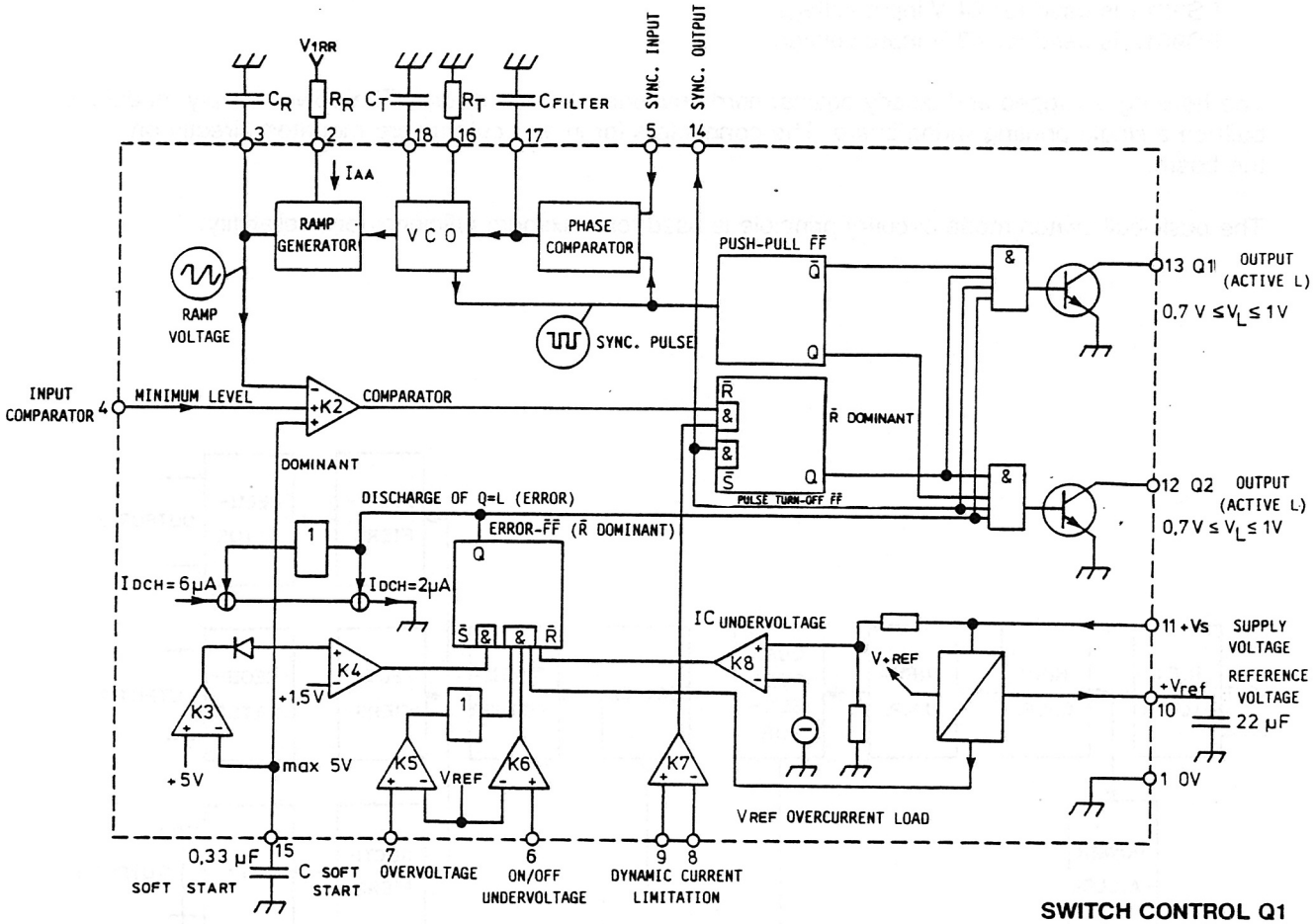

SWITCH CONTROL Q1
BLOCK DIAGRAM TDA4718
D404.855

The slope of the ramp generator is controlled by the resistor R5. The resistors R11 and R12 divide the current limiter voltage. The voltage accross the resistor R15 (Manganin) controls furthermore the current limiter. The capacitor C4 sets the "soft start time".
A part of Q1 controls the voltage. If the voltage is below the level at pin 6, pin 10 (-Vref) and pin 11 (-Vs), the complete system shuts down and the soft start-up is initiated.

The integrated circuit Q2 (CD 4049 UBE) functions as a buffer for two FET-switches, Q4 and Q5. The 13.2 V output voltage is controlled via Q8 (LM 723) and Q6 (CNY 17 II).

Q9 functions as a current amplifier using the R35 (Managanin) voltage drop as a reference. The control signal is sent via optocoupler (CNY 17 II) back to primary control Q3 (LM 301) and Q1.

The 13.2 Volt mains output is protected against over voltages (transients) by Q60.

SPECIFICATIONS

Input Voltage
24 V DC (18-36 V DC)

Output Voltage
- output 1: 13.2 V/11 A
- output 2: +5 V/2 A
- output 3: -5 V/50 mA

Output Efficiency
>75%

Output Ripple
- output 1: <7 mVpp
- output 2: <7 mVpp
- output 3: <10 mVpp

Current limit
11.5 - 12.5 A

Over voltage protection
17 V

Under voltage protection, input
16 - 18 V

Temperature range
-25°C to +60°C

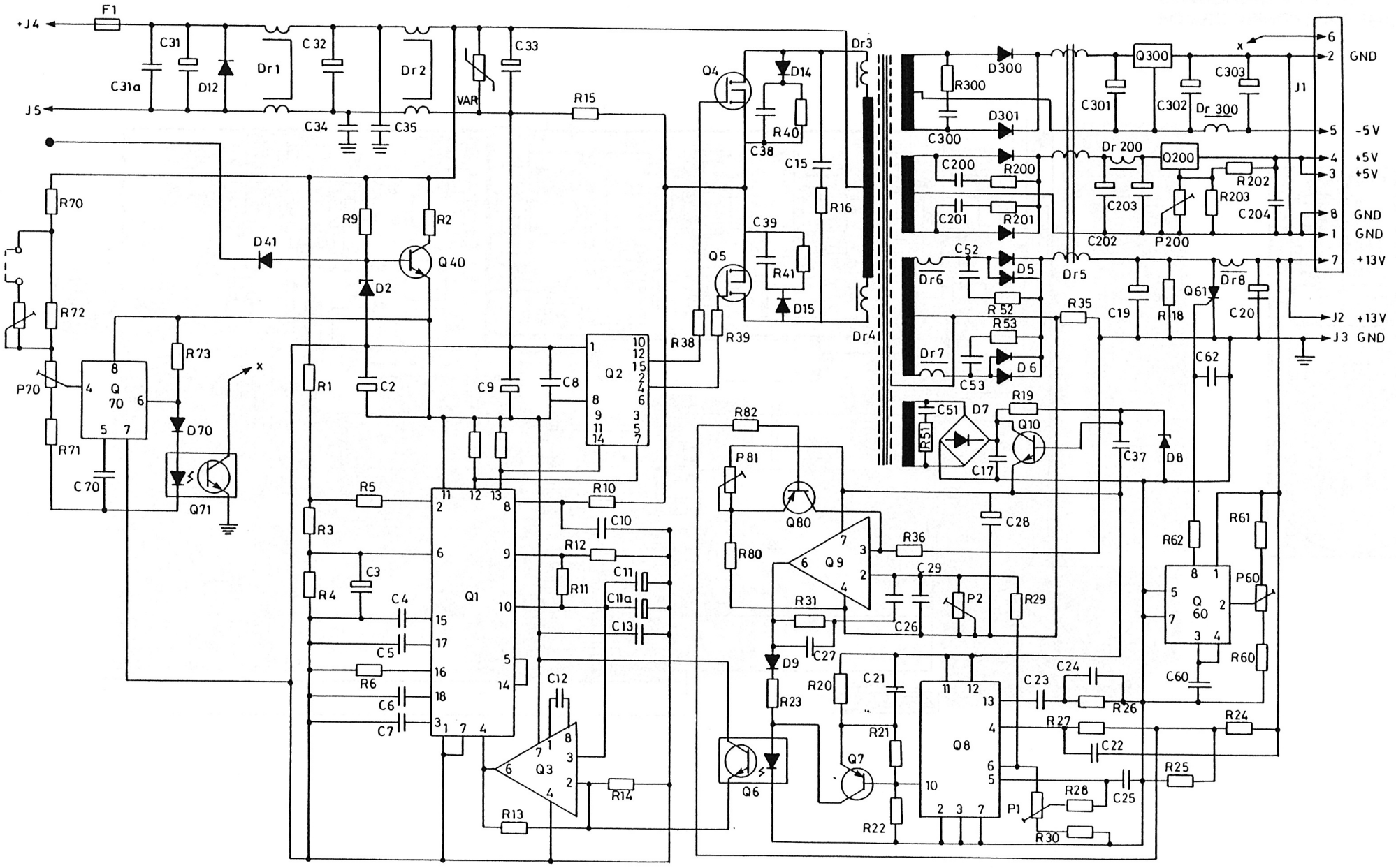

POWER SUPPLY PS9011/12

PS9011 : CODE NO. J709793P1
PS9012 : CODE NO. J709793P2

D404.677

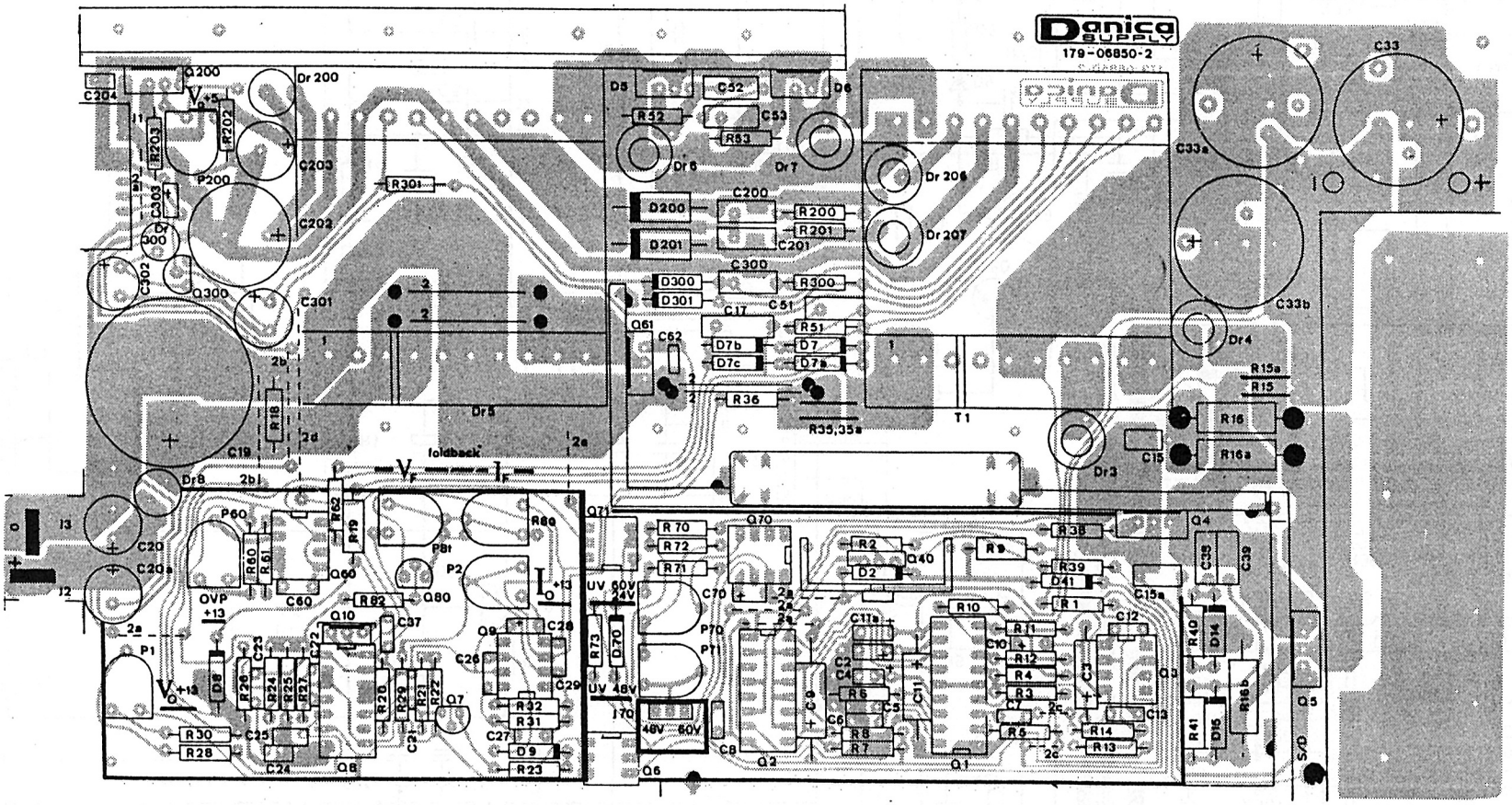

POWER AMPLIFIER PS9011/9012
COMPONENT LAYOUT

D404.678

CONNECTOR J1

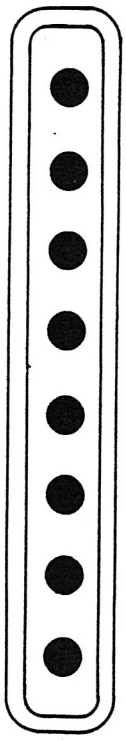

1	OUTPUT 2 GND
2	OUTPUT 3 GND
3	OUTPUT 2 + 5V
4	OUTPUT 2 + 5V
5	OUTPUT 3 - 5V
6	POWER FAILURE SIGNAL
7	OUTPUT 1 + 13,2V
8	OUTPUT 2 GND

J2

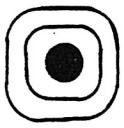

1	OUTPUT 1 + 13,2V

J3

1	OUTPUT 1 GND

J4

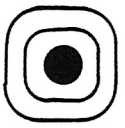

1	INPUT + VOLTAGE

J5

1	INPUT - VOLTAGE

DATE: 10/13/1987

Pos	Code No	Description	Qt
C002	J707411P300	CAP PYES 220N/63V 10%	1
C003	J710341P41	CAP ELECT 10U 16V	1
C004	J707411P300	CAP PYES 220N/63V 10%	1
C005	J710341P42	CAP CER 4N7 100V	1
C006	J710341P43	CAP CER 1N 100V	1
C007	J710341P43	CAP CER 1N 100V	1
C008	J710341P44	CAP CER 22N 63V	1
C009	J710341P41	CAP ELECT 10U 16V	1
C010	A701352P7	TANTAL 1U 16V	1
C011	J706024P3	CAP ELECT 22U 10V	1
C011a	J710341P45	CAP 100N 63V	1
C012	J710341P46	CAP CER 470P 100V	1
C013	J710341P44	CAP CER 22N 63V	1
C015	J710341P301	CAP 15N 250V	1
C017	J710341P49	CAP 100N 250V	1
C018	J710341P231	CAP 100N 400V	1
C019	J710341P50	CAP ELECT 6800U 16V	1
C020	A701225P8	CAP ELECT 470U 16V	1
C020a	A701225P8	CAP ELECT 470U 16V	1
C021	J710341P44	CAP CER 22N 63V	1
C022	J710341P44	CAP CER 22N 63V	1
C023	J710341P45	CAP 100N 63V	1
C024	J710341P43	CAP CER 1N 100V	1
C025	J710341P51	CAP 22N 63V	1
C026	J710341P45	CAP 100N 63V	1
C027	J710341P45	CAP 100N 63V	1
C028	J709426P12	TANTAL 4U7 16V	1
C029	J710341P45	CAP 100N 63V	1
C031	J710341P160	CAP 220N 100V	1
C032	J710341P161	CAP ELECT 220U 63V	1
C033	J710341P302	CAP ELECT 2200u/40V	1
C033a	J710341P302	CAP ELECT 2200u/40V	1
C033b	J710341P302	CAP ELECT 2200u/40V	1
C034	J710341P162	CAP 22N 1500V	1
C035	J710341P163	CAP CER 4N7 5000V	1

Pos	Code No	Description	Qt
C037	J710341P51	CAP 22N 63V	1
C038	J710341P303	CAP 4N7 400V	1
C039	J710341P303	CAP 4N7 400V	1
C051	J710341P53	CAP 1N 400V	1
C052	J710341P53	CAP 1N 400V	1
C053	J710341P53	CAP 1N 400V	1
C060	J710341P51	CAP 22N 63V	1
C062	J710341P51	CAP 22N 63V	1
C070	A701352P7	TANTAL 1U 16V	1
C200	J710341P53	CAP 1N 400V	1
C201	J710341P53	CAP 1N 400V	1
C202	J710341P54	CAP ELECT 3300U 16V	1
C203	J710341P55	CAP ELECT 22U 16V	1
C204	J709426P8	TANTAL 1U 35V	1
C300	J710341P53	CAP 1N 400V	1
C301	J710341P56	CAP ELECT 220U 16V	1
C302	J710341P55	CAP ELECT 22U 16V	1
C303	J709426P12	TANTAL 4U7 16W	1
Dr001	J710341P175	COIL 2 X 1.8MH 10A	1
Dr003	J710341P306	COIL Ø-10	1
Dr004	J710341P306	COIL Ø-10	1
Dr005	J710341P113	COIL ETD 49	1
Dr006	J710341P110	COIL Ø-10	1
Dr007	J710341P110	COIL Ø-10	1
Dr008	J710341P114	COIL Ø-12	1
Dr200	J710341P111	COIL	1
Dr206	J710341P110	COIL Ø-10	1
Dr207	J710341P110	COIL Ø-10	1
Dr300	J710341P112	COIL	1
D002	A700025P11	DIO SI ZENR 0.4W 12V	1
D005	J710341P70	DIO TO-220 200W	1
D006	J710341P70	DIO TO-220 200W	1
D007	J710341P71	DIO SI BAV 21	1
D007a	J710341P71	DIO SI BAV 21	1
D007b	J710341P71	DIO SI BAV 21	1

DATE: 10/13/1987

Pos	Code No	Description	Qt
D007c	J710341P71	DIO SI BAV 21	1
D008	J710341P72	DIO SI ZENR 0.4W 16V	1
D009	A700028P1	DIO SI SIG 1N4148	1
D012	J710341P170	DIO 1N4007	1
D014	J706282P3	DIO SI PWR 1N4935	1
D015	J706282P3	DIO SI PWR 1N4935	1
D041	J710341P73	DIO SI 1N4003	1
D070	A700028P1	DIO SI SIG 1N4148	1
D200	J710341P74	DIO SI BYW 98-150	1
D201	J710341P74	DIO SI BYW 98-150	1
D300	J706282P3	DIO SI PWR 1N4935	1
D301	J706282P3	DIO SI PWR 1N4935	1
F001	J710341P308	FUSE 15A	1
J001	J708068P108	CONN PWB MALE RECP 08-CKT.	1
J002	J710341P130	TERM 6.3 MM	1
J003	J710341P130	TERM 6.3 MM	1
J004	J710341P130	TERM 6.3 MM	1
J005	J710341P130	TERM 6.3 MM	1
J070	J710341P131	CONN 03-CKT	1
P001	J706008P3	RES VAR CERM 2K2 20%	1
P002	J706008P2	RES VAR CERM 220R 20%	1
P060	J706008P4	RES VAR CERM 10K 20%	1
P070	J706008P4	RES VAR CERM 10K 20%	1
P081	J706008P7	RES VAR CERM 22K 20%	1
P200	J710341P80	RES VAR CERM 100R 20%	1
Q001	J710341P90	IC TDA4718	1
Q002	A700176P1	IC DIG BUFR 4049U	1
Q003	J710341P91	IC CA301 AC	1
Q004	J710341P304	TSTR FET SI IRF 540	1
Q005	J710341P304	TSTR FET SI IRF 540	1
Q006	J710341P93	DIO OPTO CNY 17-2	1
Q007	J710341P94	TSTR NPN SI BC 307	1
Q008	J706017P1	IC LIN VR VAR 723	1
Q009	J710341P95	IC LTN OP-AMP CA 3140E	1
Q010	J710341P96	TSTR NPN SI MJE 340	1

Pos	Code No	Description	Qt
Q040	J710341P305	TSTR NPN SI 2N6099	1
Q060	J710341P226	IC LIN DET MC3423	1
Q061	J710341P227	THYRSTR SCR TYN685	1
Q070	J709452P1	IC LIN DET MC3423	1
Q071	J710341P93	DIO OPTO CNY 17-2	1
Q080	J710341P94	TSTR NPN SI BC 307	1
Q200	J708555P1	IC LIN VR FIX 78T05	1
Q300	J706031P1	IC LIN VR FIX 78L05	1
R001	A701250P1	JUMPER	1
R002	J710341P2	RES MFLM 1/4W 100R	1
R003	A701250P351	RES MFLM 1/4W 33K2 1%	1
R004	A701250P273	RES MFLM 1/4W 5K62 1%	1
R005	A701250P489	RES MFLM 1/4W 825K 1%	1
R006	J710341P3	RES MFLM 1/4W 10K 1%	1
R007	J710341P4	RES MFLM 1/4W 2K2 1%	1
R008	J710341P4	RES MFLM 1/4W 2K2 1%	1
R009	J710341P13	RES MFLM 1/4W 2K7 1%	1
R010	J710341P2	RES MFLM 1/4W 100R	1
R011	J710341P6	RES MFLM 1/4W 18K	1
R012	J710341P7	RES MFLM 1/4W 1K	1
R013	J710341P8	RES MFLM 1/4W 560R	1
R014	J710341P7	RES MFLM 1/4W 1K	1
R015	J710341P10	RES OR01	1
R015a	J710341P10	RES OR01	1
R016	J710341P15	RES MFLM 5W 10R	1
R016a	J710341P15	RES MFLM 5W 10R	1
R018	J710341P12	RES MFLM 1.6W 330R	1
R019	J710341P5	RES MFLM 1.6W 10K	1
R020	J710341P7	RES MFLM 1/4W 1K	1
R021	J710341P14	RES MFLM 1/4W 470R	1
R022	J710341P4	RES MFLM 1/4W 2K2 1%	1
R023	J710341P7	RES MFLM 1/4W 1K	1
R024	J710341P8	RES MFLM 1/4W 560R	1
R025	J710341P14	RES MFLM 1/4W 470R	1
R026	J710341P16	RES MFLM 1/4W 4K7	1

DATE: 10/13/1987

Pos	Code No	Description	Qt
R027	J710341P17	RES MFLM 1/4W 5K6	1
R028	J710341P16	RES MFLM 1/4W 4K7	1
R029	J710341P18	RES MFLM 1/4W 12K	1
R030	J710341P19	RES MFLM 1/4W 8K2	1
R031	J710341P18	RES MFLM 1/4W 12K	1
R032	J710341P20	RES MFLM 1/4W 100K	1
R035	J710341P10	RES OR01	1
R035a	J710341P10	RES OR01	1
R036	J710341P2	RES MFLM 1/4W 100R	1
R038	J710341P21	RES MFLM 1/4W 47R	1
R039	J710341P21	RES MFLM 1/4W 47R	1
R040	J710341P22	RES MFLM 1.6W 180R	1
R041	J710341P22	RES MFLM 1.6W 180R	1
R051	J710341P23	RES MFLM 0.5W 10R	1
R052	J710341P23	RES MFLM 0.5W 10R	1
R053	J710341P23	RES MFLM 0.5W 10R	1
R060	J710341P7	RES MFLM 1/4W 1K	1
R061	J710341P24	RES MFLM 1/4W 22K	1
R062	J710341P25	RES MFLM 1/4W 68R	1
R070	A700184P1	JUMPER	1
R071	A700184P1	JUMPER	1
R072	J710341P24	RES MFLM 1/4W 22K	1
R073	J710341P7	RES MFLM 1/4W 1K	1
R080	J710341P27	RES MFLM 1/4W 27K	1
R082	J710341P24	RES MFLM 1/4W 22K	1
R200	J710341P23	RES MFLM 0.5W 10R	1
R201	J710341P23	RES MFLM 0.5W 10R	1
R202	J710341P28	RES MFLM 1/4W 22R	1
R203	J710341P29	RES MFLM 1/4W 220R	1
R300	J710341P23	RES MFLM 0.5W 10R	1
R301	J710341P9	RES MFLM 1/4W 18K	1
T001	J710341P115	TRANSFORMER ETD 49	1
VAR	J710341P150	VARISTOR SIOV	1
		NON ELECTRONICAL PARTS	
	J710341P120	HEATSINK FOR Q4	1

Pos	Code No	Description	Qt
	J710341P121	HEATSINK FOR Q5	1
	J710341P122	HEATSINK FOR Q5+6-Q200	1
	J710341P123	HEATSINK FOR Q10	1
	J710341P124	HEATSINK FOR Q40	1
	J710341P140	BUSH SOLDER 12MM	5
	J710341P141	BUSH SOLDER 20MM	4
	J710341P142	JUMPER	11
	J710341P307	CURRENTSLEEVE 25.4MM	4
	J710341P145	STRAP	1
	J710341P146	PRINT	1
	J710341P190	NUT M-3	2
	J710341P191	SCR M-3X6	5
	J710341P192	SCR M-3X6	13
	J710341P193	SCR M-4X10	1
	J710341P194	WASH 3MM	11
	J710341P195	SPRING 3MM	11
	J710341P196	WASH 4MM	1
	J710341P197	SPRING 4MM	1
	J710341P198	WASH 3MM	7
	J710341P200	INS FOR TO-220	6
	J710341P201	CLIPS FOR TO-220	6
	J710341P180	CHASSIS	1
	J710341P85	PRINTED WIRING BOARD	1

DATE: 10/13/1987

Pos	Code No	Description	Qt
C002	J707412P11	CAP PYES 220N 10%	1
C003	J710341P41	CAP ELECT 10U 16W	1
C004	J707412P11	CAP PYES 220N 10%	1
C005	J710341P42	CAP CER 4N7 100W	1
C006	J710341P43	CAP CER 1N 100W	1
C007	J710341P43	CAP CER 1N 100W	1
C008	J710341P44	CAP CER 22N 63W	1
C009	J710341P41	CAP ELECT 10U 16W	1
C010	A701352P7	TANTAL 1U 16W	1
C011	J706024P3	CAP ELECT 22U 10W	1
C011a	J710341P45	CAP 100N 63W	1
C012	J710341P46	CAP CER 470P 100W	1
C013	J710341P44	CAP CER 22N 63W	1
C015	J710341P47	CAP 4N7 400W	1
C017	J710341P49	CAP 100N 250W	1
C018	J710341P53	CAP 1N 400V	1
C019	J710341P50	CAP ELECT 6800U 16W	1
C020	A701225P8	CAP ELECT 470U 16W	1
C020a	A701225P8	CAP ELECT 470U 16W	1
C021	J710341P44	CAP CER 22N 63W	1
C022	J710341P44	CAP CER 22N 63W	1
C024	J710341P230	CAP CER 1N 100V	1
C025	J710341P51	CAP 22N 63W	1
C026	J710341P45	CAP 100N 63W	1
C027	J710341P45	CAP 100N 63W	1
C028	J709426P12	TANTAL 4U7 16W	1
C029	J710341P45	CAP 100N 63W	1
C031	J710341P160	CAP 220N 100V	1
C032	J710341P161	CAP ELECT 220U 63V	1
C033	J710341P52	CAP ELECT 470U 100W	1
C033a	J710341P52	CAP ELECT 470U 100W	1
C033b	J710341P52	CAP ELECT 470U 100W	1
C034	J710341P162	CAP 22N 1500V	1
C035	J710341P163	CAP CER 4N7 5000V	1
C037	J710341P51	CAP 22N 63W	1

Pos	Code No	Description	Qt
C038	J710341P53	CAP 1N 400W	1
C051	J710341P53	CAP 1N 400W	1
C052	J710341P53	CAP 1N 400W	1
C053	J710341P53	CAP 1N 400W	1
C060	J710341P51	CAP 22N 63W	1
C062	J710341P51	CAP 22N 63W	1
C070	A701352P7	TANTAL 1U 16W	1
C200	J710341P53	CAP 1N 400W	1
C201	J710341P53	CAP 1N 400W	1
C202	J710341P54	CAP ELECT 3300U 16W	1
C203	J710341P55	CAP ELECT 22U 16W	1
C204	J709426P8	TANTAL 1U 35W	1
C300	J710341P53	CAP 1N 400W	1
C301	J710341P56	CAP ELECT 220U 16W	1
C302	J710341P55	CAP ELECT 22U 16W	1
C303	J709426P12	TANTAL 4U7 16W	1
Dr001	J710341P175	COIL 2 X 1.8MH 10A	1
Dr003	J710341P110	COIL Ø-10	1
Dr004	J710341P110	COIL Ø-10	1
Dr005	J710341P113	COIL ETD 49	1
Dr006	J710341P110	COIL Ø-10	1
Dr007	J710341P110	COIL Ø-10	1
Dr008	J710341P114	COIL Ø-12	1
Dr200	J710341P111	COIL	1
Dr206	J710341P110	COIL Ø-10	1
Dr207	J710341P110	COIL Ø-10	1
Dr300	J710341P112	COIL	1
D002	A700025P11	DIO SI ZENR 0.4W 12V	1
D005	J710341P70	DIO TO-220 200W	1
D006	J710341P70	DIO TO-220 200W	1
D007	J710341P71	DIO SI BAV 21	1
D007a	J710341P71	DIO SI BAV 21	1
D007b	J710341P71	DIO SI BAV 21	1
D007c	J710341P71	DIO SI BAV 21	1
D008	J710341P72	DIO SI ZENR 0.4W 16V	1

DATE: 10/13/1987

Pos	Code No	Description	Qt
D009	A700028P1	DIO SI SIG 1N4148	1
D012	J710341P170	DIO 1N4007	1
D015	J706282P3	DIO SI PWR 1N4935	1
D041	J710341P73	DIO SI 1N4003	1
D070	A700028P1	DIO SI SIG 1N4148	1
D200	J710341P74	DIO SI BYW 98-150	1
D201	J710341P74	DIO SI BYW 98-150	1
D300	J706282P3	DIO SI PWR 1N4935	1
D301	J706282P3	DIO SI PWR 1N4935	1
F001	J707468P13	FUSE 10A	1
J001	J708068P108	CONN PWB MALE RECP 08-CKT.	1
J002	J710341P130	TERM 6.3 MM	1
J003	J710341P130	TERM 6.3 MM	1
J004	J710341P130	TERM 6.3 MM	1
J005	J710341P130	TERM 6.3 MM	1
J070	J710341P131	CONN 03-CKT	1
P001	J706008P3	RES VAR CERM 2K2 20%	1
P002	J706008P2	RES VAR CERM 220R 20%	1
P060	J706008P4	RES VAR CERM 10K 20%	1
P070	J706008P4	RES VAR CERM 10K 20%	1
P071	J706008P7	RES VAR CERM 22K 20%	1
P081	J706008P7	RES VAR CERM 22K 20%	1
P200	J710341P80	RES VAR CERM 100R 20%	1
Q001	J710341P90	IC TDA4718	1
Q002	A70076P1	IC DIG BUFR 4049U	1
Q003	J710341P91	IC CA301 AC	1
Q004	J710341P92	TSTR FET IRF 640	1
Q005	J710341P92	TSTR FET IRF 640	1
Q006	J710341P93	DIO OPTO CNY 17-2	1
Q007	J710341P94	TSTR NPN SI BC 307	1
Q008	J706017P1	IC LIN VR VAR 723	1
Q009	J710341P95	IC LTN OP-AMP CA 3140E	1
Q010	J710341P96	TSTR NPN SI MJE 340	1
Q040	J710341P225	TSTR NPN SI TIP29D	1
Q060	J710341P226	IC LIN DET MC3423	1

Pos	Code No	Description	Qt
Q061	J710341P227	THYRSTR SCR TYN685	1
Q070	J709452P1	IC LIN DET MC3423	1
Q071	J710341P93	DIO OPTO CNY 17-2	1
Q080	J710341P94	TSTR NPN SI BC 307	1
Q300	J706031P1	IC LIN VR FIX 78L05	1
R001	A701250P342	RES MFLM 1/4W 26K7 1%	1
R002	J710341P2	RES MFLM 1/4W 100R	1
R003	A701250P251	RES MFLM 1/4W 3K32 1%	1
R004	A701250P236	RES MFLM 1/4W 2K32 1%	1
R005	A701250P409	RES MFILM 1/4W 121K 1%	1
R006	J710341P3	RES MFLM 1/4W 10K	1
R007	J710341P4	RES MFLM 1/4W 2K2	1
R008	J710341P4	RES MFLM 1/4W 2K2	1
R009	J710341P5	RES MFLM 1.6W 10K	1
R010	J710341P2	RES MFLM 1/4W 100R	1
R011	J710341P6	RES MFLM 1/4W 18K	1
R012	J710341P7	RES MFLM 1/4W 1K	1
R013	J710341P8	RES MFLM 1/4W 330R	1
R014	J710341P7	RES MFLM 1/4W 1K	1
R015	J710341P10	RES OR01	1
R015a	J710341P10	RES OR01	1
R016	J710341P11	RES MFLM 2.5W 22R	1
R016a	J710341P11	RES MFLM 2.5W 22R	1
R018	J710341P12	RES MFLM 1.6W 330R	1
R019	J710341P5	RES MFLM 1.6W 10K	1
R020	J710341P7	RES MFLM 1/4W 1K	1
R021	J710341P14	RES MFLM 1/4W 470R	1
R022	J710341P4	RES MFLM 1/4W 2K2	1
R023	J710341P7	RES MFLM 1/4W 1K	1
R024	J710341P8	RES MFLM 1/4W 330R	1
R025	J710341P14	RES MFLM 1/4W 470R	1
R026	J710341P4	RES MFLM 1/4W 2K2	1
R027	J710341P17	RES MFLM 1/4W 5K6	1
R028	J710341P16	RES MFLM 1/4W 4K7	1
R029	J710341P18	RES MFLM 1/4W 12K	1

DATE: 10/13/1987

Pos	Code No	Description	Qt
R030	J710341P19	RES MFLM 1/4W 8K2	1
R031	J710341P18	RES MFLM 1/4W 12K	1
R032	J710341P20	RES MFLM 1/4W 100K	1
R035	J710341P10	RES OR01	1
R035a	J710341P10	RES OR01	1
R038	J710341P21	RES MFLM 1/4W 47R	1
R039	J710341P21	RES MFLM 1/4W 47R	1
R040	J710341P22	RES MFLM 1.6W 180R	1
R041	J710341P22	RES MFLM 1.6W 180R	1
R051	J710341P23	RES MFLM 0.5W 10R	1
R052	J710341P23	RES MFLM 0.5W 10R	1
R053	J710341P23	RES MFLM 0.5W 10R	1
R060	J710341P7	RES MFLM 1/4W 1K	1
R061	J710341P24	RES MFLM 1/4W 22K	1
R062	J710341P25	RES MFLM 1/4W 68R	1
R070	J710341P26	RES MFLM 1/4W 68K	1
R071	A700184P1	JUMPER	1
R072	J710341P24	RES MFLM 1/4W 22K	1
R073	J710341P7	RES MFLM 1/4W 1K	1
R080	J710341P27	RES MFLM 1/4W 27K	1
R082	J710341P24	RES MFLM 1/4W 22K	1
R200	J710341P23	RES MFLM 0.5W 10R	1
R201	J710341P23	RES MFLM 0.5W 10R	1
R202	J710341P28	RES MFLM 1/4W 22R	1
R203	J710341P29	RES MFLM 1/4W 220R	1
R300	J710341P23	RES MFLM 0.5W 10R	1
R301	J710341P9	RES MFLM 1/4W 18K	1
TQ01	J710341P115	TRANSFORMER ETD 49	1
VAR	J710341P150	VARISTOR SIOV	
		NON ELECTRONICAL PARTS	
			1
	J710341P120	HEATSINK FOR Q4	1
	J710341P121	HEATSINK FOR Q5	1
	J710341P122	HEATSINK FOR Q5+6-Q200	1

Pos	Code No	Description	Qt
	J710341P123	HEATSINK FOR Q10	1
	J710341P124	HEATSINK FOR Q40	1
	J710341P140	BUSH SOLDER 12MM	5
	J710341P141	BUSH SOLDER 20MM	4
	J710341P142	JUMPER	11
	J710341P143	JUMPER-B 2-CKT	1
	J710341P144	RAIL CURRENT 25.4MM	4
	J710341P145	STRAP	1
	J710341P146	PRINT	1
	J710341P190	NUT M-3	2
	J710341P191	SCR M-3X6	5
	J710341P192	SCR M-3X6	13
	J710341P193	SCR M-4X10	1
	J710341P194	WASH 3MM	11
	J710341P195	SPRING 3MM	11
	J710341P196	WASH 4MM	1
	J710341P197	SPRING 4MM	1
	J710341P198	WASH 3MM	7
	J710341P200	INS FOR TO-220	6
	J710341P201	CLIPS FOR TO-220	6
	J710341P180	CHASSIS	1
	J710341P85	PRINTED WIRING BOARD	1

REPLACED BY RC969

Storno

RC961

RECEIVER FRONT END

This receiver front-end is the High Intermodulation Attenuation module with narrow-band front-end. It can be tuned over the 403-470 MHz band.

The output from the front-end is the 21.4 MHz IF signal.

This module is used when high intermodulation and blocking attenuation is needed, and in duplex applications.

The receiver front-end consists of a helical bandpass filter with 5 resonators and a J-FET mixer.

Between the bandpass filter and the mixer is an LC-circuit for matching the filter to the mixer gate. The injection signal is fed to the FET mixer's source through a two circuit bandpass filter for suppressing spurious signals in the injection signal. The drain of the FET mixer is connected to an IF resonant circuit which adapts the output impedance to the crystal filter in the IA module.
The receiver circuitry has a central metering point for testing the injection signal level.

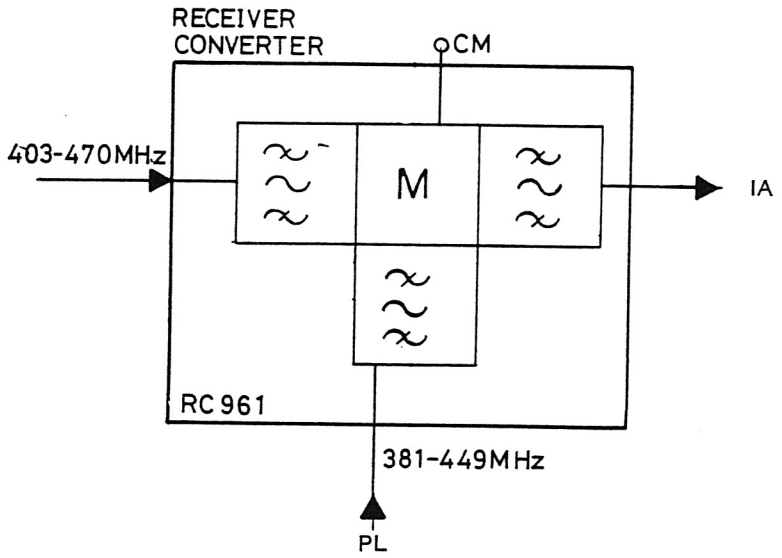

TECHNICAL SPECIFICATIONS

Antenna impedance
50 ohm

Signal level
<2 V

Injection impedance
50 ohm

Output, IF impedance
1600 ohm ± 10%

Supply voltage
13.6 V ± 20%

Current consumption
<5 mA

Antenna frequency, (tunable)
403 - 470 MHz

Bandwidth, 1 dB
Room temp. <4.0 MHz

Bandwidth, 3 dB
Room temp. <5.5 MHz

Injection frequency, (tunable)
381 - 449 MHz

Bandwidth, 3 dB
7 MHz

Bandwidth, 20 dB
40 MHz

Intermediate frequency
21.4 MHz

Sensitivity, 12 dB EIA 1/2 EMF
≤0.35 uV

Intermodulation, EIA
≥85 dB

Temperature range
$-40^{o}C$ to $+85^{o}C$

Storno

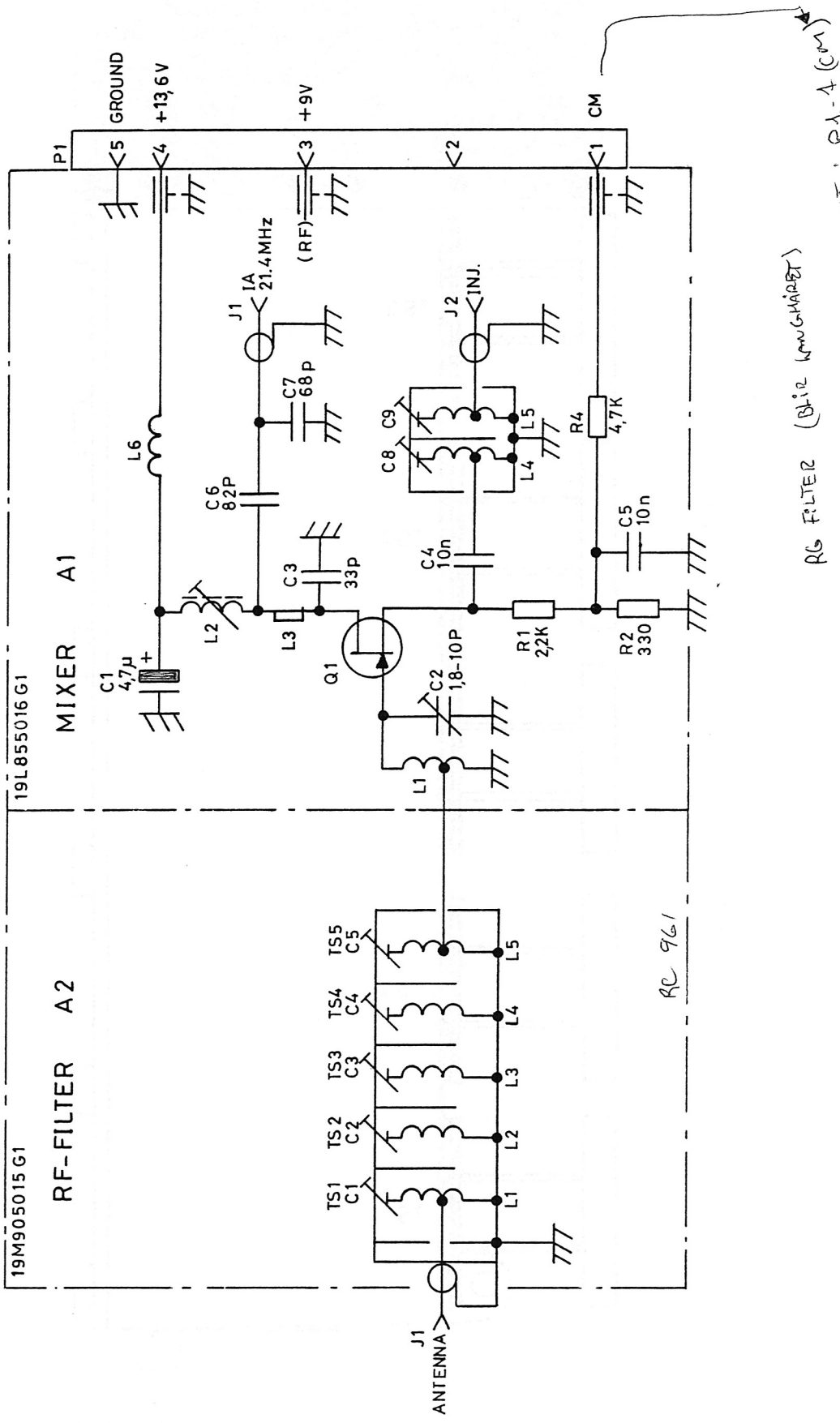

RECEIVER CONVERTER RC961

REV. A D402.911/3

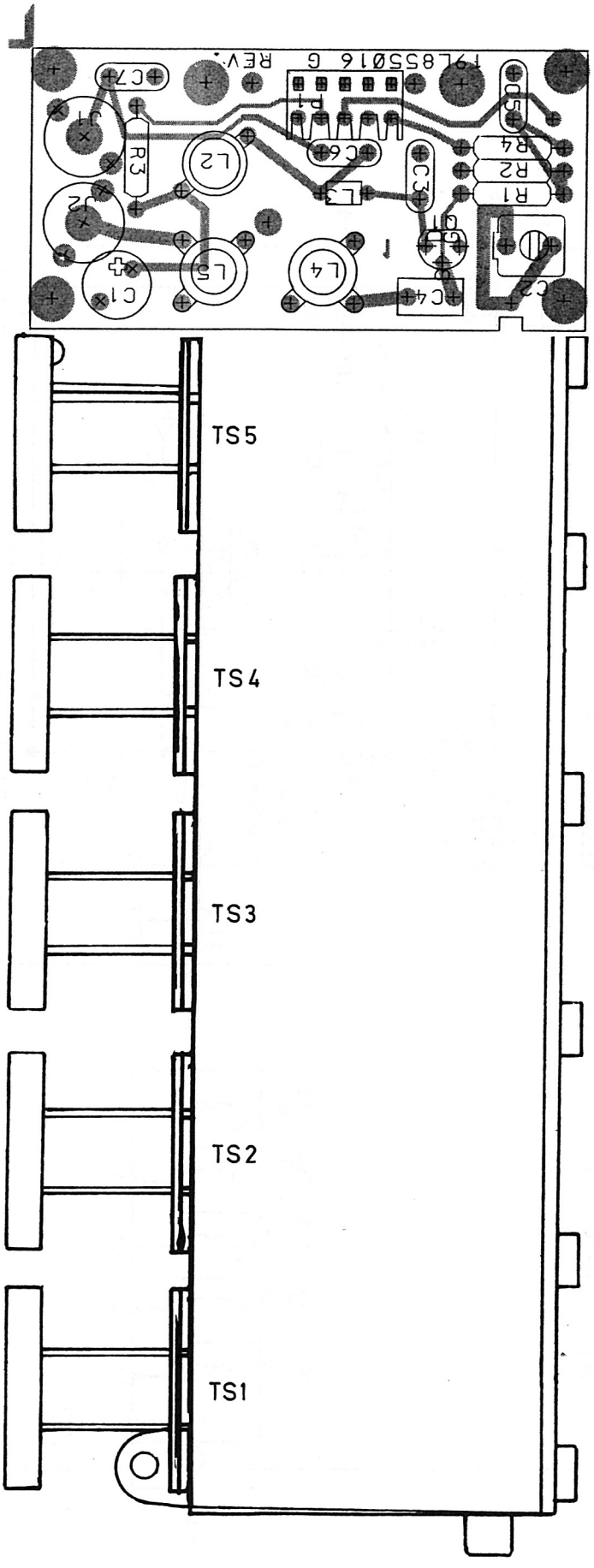

RECEIVER CONVERTER RC961
COMPONENT LAYOUT

CODE NO.M905018G1 | D403.474

ITEM NUMBER	DESCRIPTION
M905018G1	RC 961

L855016G1	A01 : SUB ASM BD PW, MIXER F. RC96X
M905015G1	A02 : SUB ASM, HELIX FLT COVER F. RC961
M905016G5	SUB ASM : HOUSING F. RC961

P A R T S L I S T :

CIRCUIT POSITION	COMPONENT ITEM NUMBER	COMPONENT DESCRIPTION	QUANTITY TOTAL	
A01	L855016G1	ASM BD PW RC96X	1	(SEE BELOW:
A02	M905015G1	ASM RC961	1	(SEE BELOW:
002	L855144P1	COVER	1	
003	J707755G1	NUT M9	5	
004	J706109P1	SCR TUN	2	
005	J706110P1	SPG TUN	2	
007	J706108G1	ASM TUNING RC961	5	(SEE BELOW:
008	M905016G5	HOUSING RC961	1	
009	A701293P102	SLV		
013	A700036P406	SCREW PAN HD M 3.0X6.0	21	

A01 : L855016G1 : ASM BD PW RC96X :

C01	A701534P6	CAP TA SOL 4U7 20% 35V	1
C02	J706003P1	CAP VAR 1,8/10PF	1
C03	A700235P19	CAP CER N150 33P 5% 50V	1
C04	A700234P7	CAP PYES 10N 10% 50V	1
C05	A700234P7	CAP PYES 10N 10% 50V	1
C06	A700235P24	CAP CER N150 82P 5% 50V	1
C07	A700235P23	CAP CER N150 68P 5% 50V	1
J01	A700171P2	CONN PWB FEM PHONO	1
J02	A700171P2	CONN PWB FEM PHONO	1
L02	J706538G1	COIL	1
L03	J706128G1	COIL	1
L04	J706154P1	COIL RF FIX 7-1/2T TAP	1
L05	J706154P1	COIL RF FIX 7-1/2T TAP	1
L06	A700024P25	COIL FIX 10,0UH 10%	1
P01	A700041P4	CONN PWB FEM 05 CKT	1
Q01	J706038P1	TSTR JFET SI 2N5245	1
R01	A700019P41	RES DEPC 2K2 5% 1/4W	1
R02	A700019P31	RES DEPC 330R 5% 1/4W	1
R04	A700019P45	RES DEPC 4K7 5% 1/4W	1

CIRCUIT POSITION	COMPONENT ITEM NUMBER	COMPONENT DESCRIPTION	QUANTITY TOTAL
A02 :	M905015G1 :	ASM RC961 :	
J01	A700171P2	CONN PWB FEM PHONO	1
L01	L855133P1	COIL HEL	1
L02	L855133P2	COIL HEL	1
L03	L855133P2	COIL HEL	1
L04	L855133P2	COIL HEL	1
L05	L855133P3	COIL HEL	1
002	K805054P1	COVER	1
003	K805092P1	SUPPORT	1
007 :	J706108G1 :	ASM TUNING RC961 :	
00	J706107P1	CORE TUNING	1
00	K805055P1	CAM TUNING	1

Storno

RC962

RECEIVER FRONT END

This receiver front-end is the High Sensitivity module containing an RF-amplifier.
The RC962 is a broad-band front-end which can be tuned over the 403-470 MHz band.

The output from the front-end is the 21.4 MHz IF signal.

This receiver front-end is used when high RF sensitivity is required, and for simplex only.

The module consists of a dual-resonator helical bandpass filter, an RF amplifier, a triple helical resonator bandpass filter, and a J-FET mixer. The input bandpass filter is rather wide and has low insertion loss, approx. 1 dB. The RF amplifier is a bipolar transistor which is driven at a relative high current in order to obtain good intermodulation performance. The following band-pass filter is rather narrow for obtaining the necessary RF selectivity and its insertion loss is approx. 3 dB. For mixer description refer to RC969

The receiver front-end is built on a printed wiring board on which the helical coils and the RF amplifier is mounted. The assembly is then screwed onto a casting which forms the rest of the receiver front-end.

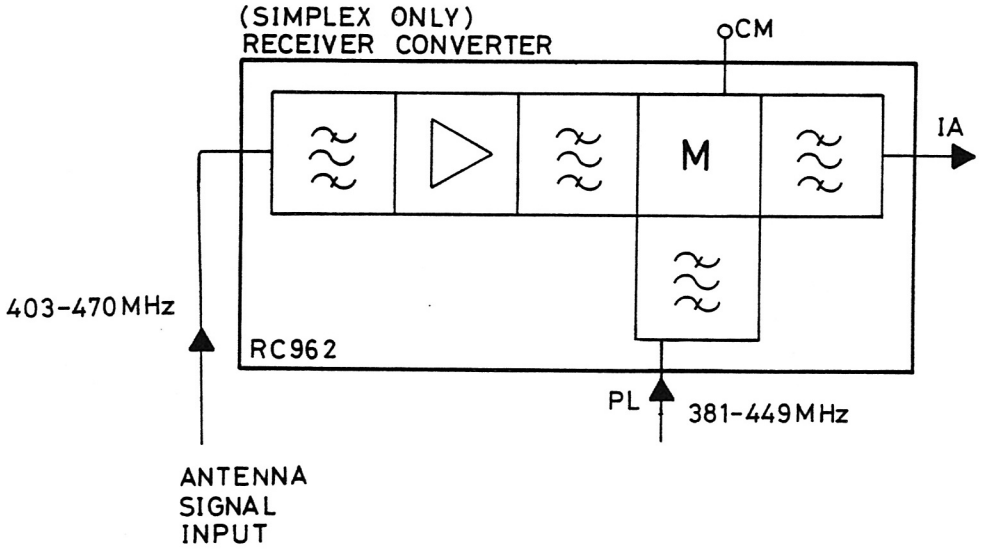

TECHNICAL SPECIFICATIONS

Antenna impedance
50 ohm

Signal level
<2 V

Injection impedance
50 ohm

Output, IF impedance
1600 ohm ± 10% Cp max. = 12 pF

Supply voltage
9.0 V ± 5%

Current consumption
<10 mA

Antenna frequency
403 - 470 MHz

Bandwidth, 1 dB
4.5 MHz

Bandwidth, 3 dB
5.5 MHz

Injection frequency
381 - 449 MHz

Intermediate frequency
21.4 MHz

Sensitivity, 12 dB EIA 1/2 EMF
≤0.20 uV

Intermodulation, EIA
≥80 dB

Temperature range
$-40^{o}C$ to $+85^{o}C$

Storno

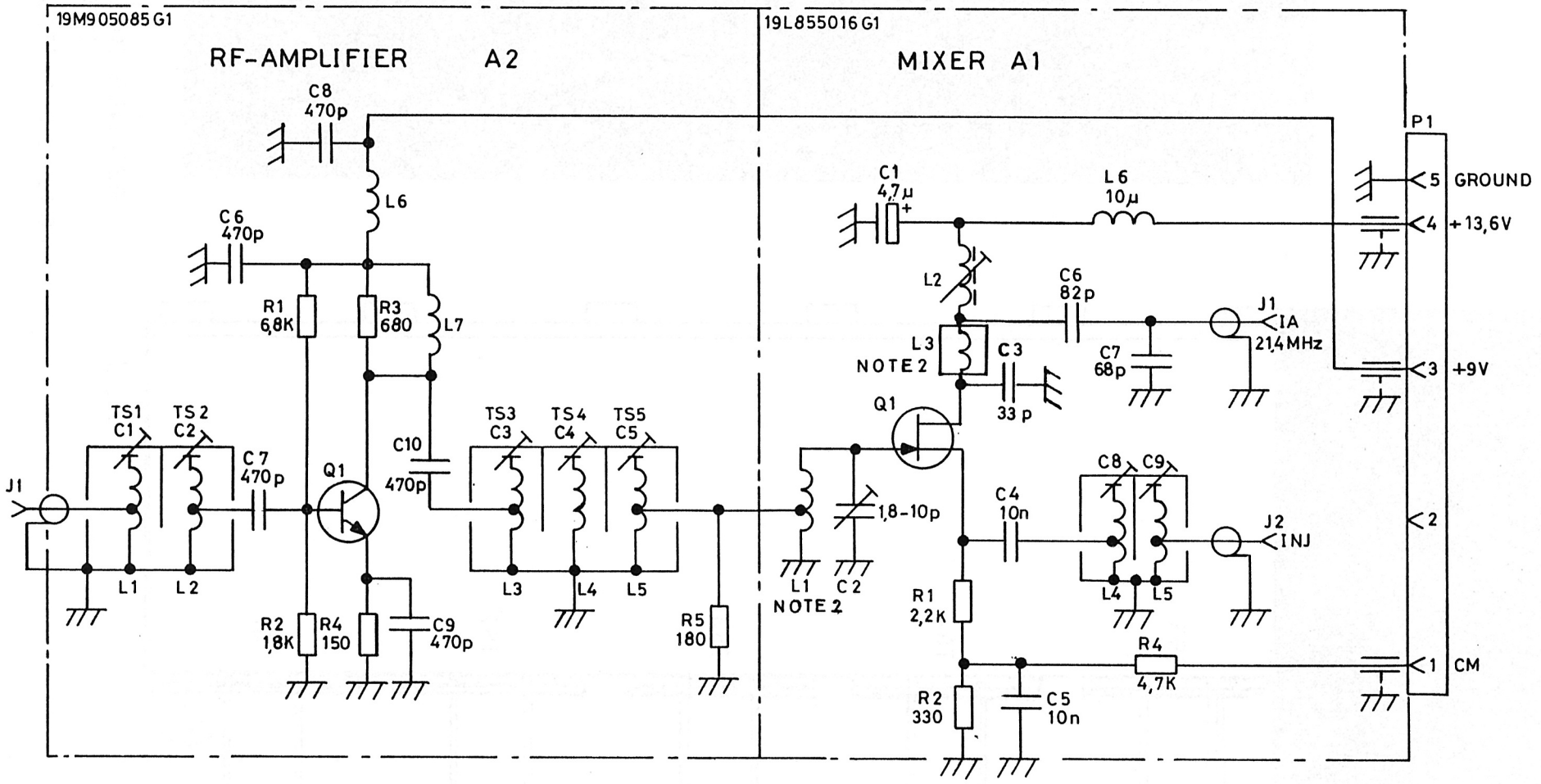

NOTE:1

High sensitivity
0,4uVemf.(12dB.sinad)
Power gain 12dB.

NOTE:2

L1 is part of A1-(MIXER)PWB.
L3 is composite of coil and ferrite bead.

RECEIVER CONVERTER RC962

CODE NO M905020G1 REV. A D402.910/4

Storno

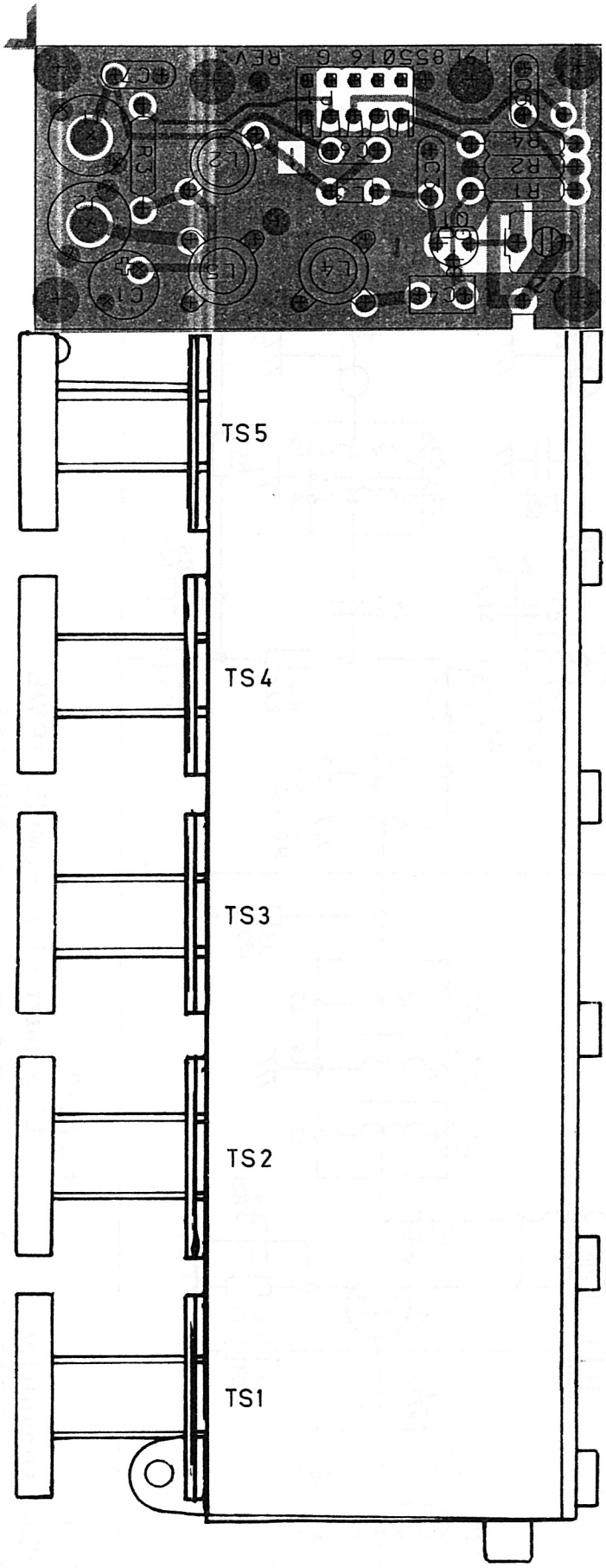

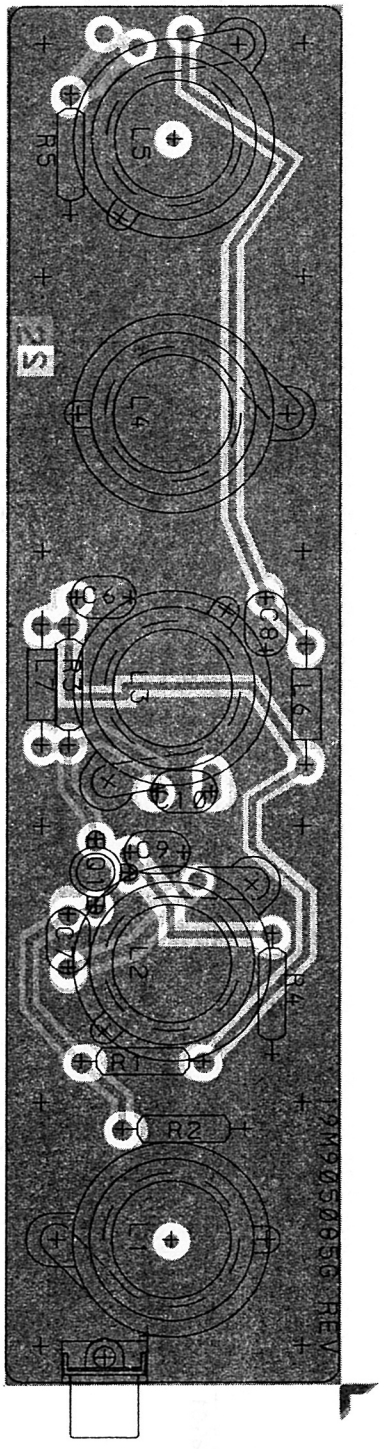

RECEIVER CONVERTER RC962
COMPONENT LAYOUT

CODE NO. M905020G1 | D402.963/2

ITEM NUMBER	DESCRIPTION
M905020G1	RC 962

L855016G1	A01 : SUB ASM BD PW, MIXER F. RC 96X
M905085G1	A02 : SUB ASM RF AMPL RC962
M905016G6	SUB ASM : HOUSING RC962

P A R T S L I S T :

CIRCUIT POSITION	COMPONENT ITEM NUMBER	COMPONENT DESCRIPTION	QUANTITY TOTAL	
A01	L855016G1	ASM BD PW RC96X	1	(SEE BELOW:
A02	M905085G1	ASM RF AMPL RC962	1	(SEE BELOW:
002	L855144P1	COVER	1	
003	J707755G1	NUT M9	5	
004	J706109P1	SCR TUN	2	
005	J706110P1	SPG TUN	2	
010	M905016G6	HOUSING RC962	1	
011	J706108G1	ASM TUNING RC961	5	(SEE BELOW:
012	A701293P102	SLV		
013	A700031P406	SCREW PAN HD M 3.0X6.0	21	
A01 :	L855016G1 :	ASM BD PW RC96X :		
C01	A701534P6	CAP TA SOL 4U7 20% 35V	1	
C02	J706003P1	CAP VAR 1,8/10PF	1	
C03	A700235P19	CAP CER N150 33P 5% 50V	1	
C04	A700234P7	CAP PYES 10N 10% 50V	1	
C05	A700234P7	CAP PYES 10N 10% 50V	1	
C06	A700235P24	CAP CER N150 82P 5% 50V	1	
C07	A700235P23	CAP CER N150 68P 5% 50V	1	
J01	A700171P2	CONN PWB FEM PHONO	1	
J02	A700171P2	CONN PWB FEM PHONO	1	
L02	J706538G1	COIL	1	
L03	J706128G1	COIL	1	
L04	J706154P1	COIL RF FIX 7-1/2T TAP	1	
L05	J706154P1	COIL RF FIX 7-1/2T TAP	1	
L06	A700024P25	COIL FIX 10,0UH 10%	1	
P01	A700041P4	CONN PWB FEM 05 CKT	1	
Q01	J706038P1	TSTR JFET SI 2N5245	1	
R01	A700019P41	RES DEPC 2K2 5% 1/4W	1	
R02	A700019P31	RES DEPC 330R 5% 1/4W	1	
R04	A700019P45	RES DEPC 4K7 5% 1/4W	1	

CIRCUIT POSITION	COMPONENT ITEM NUMBER	COMPONENT DESCRIPTION	QUANTITY TOTAL
A02 :	M905085G1 :	ASM RF AMPL RC962 :	
C06	A700233P5	CAP CER CL2 470P 20% 50V	1
C07	A700233P5	CAP CER CL2 470P 20% 50V	1
C08	A700233P5	CAP CER CL2 470P 20% 50V	1
C09	A700233P5	CAP CER CL2 470P 20% 50V	1
C10	A700233P5	CAP CER CL2 470P 20% 50V	1
J01	A700171P2	CONN PWB FEM PHONO	1
L01	L855133P4	COIL HEL	1
L02	L855133P5	COIL HEL	1
L03	L855133P8	COIL HEL	1
L04	L855133P2	COIL HEL	1
L05	L855133P4	COIL HEL	1
L06	A700024P17	COIL FIX 2,2UH 10%	1
L07	A700024P1	COIL FIX 100NH 10%	1
Q01	J706011P2	TSTR NPN SI BFR 91A	1
R01	A700019P47	RES DEPC 6K8 5% 1/4W	1
R02	A700019P40	RES DEPC 1K8 5% 1/4W	1
R03	A700019P35	RES DEPC 680R 5% 1/4W	1
R04	A700019P27	RES DEPC 150R 5% 1/4W	1
R05	A700019P28	RES DEPC 180R 5% 1/4W	1
002	K805092P1	SUPPORT	1
011 :	J706108G1 :	ASM TUNING RC961 :	
00	J706107P1	CORE TUNING	1
00	K805055P1	CAM TUNING	1

RC969

RECEIVER FRONT END

This receiver front-end is the High Intermodulation attenuation module with narrow-band front-end. It can be tuned over the 403-470 MHz band. The output from the front-end is the 21.4 MHz IF signal.
This module is used when high intermodulation and blocking attenuation is needed, and in duplex applications.

The receiver front-end consists of a helical bandpass filter with 5 resonators and a J-FET mixer.
Between the 2. and 3. helixresonator is added a 5. order low-pass filter. Between the bandpass filter and the mixer is an LC-circuit for matching the filter to the mixer gate. The injection signal is fed to the FET mixer's source through a two circuit bandpass filter for suppressing spurious signals in the injection signal. The drain of the FET mixer is connected to an IF resonant circuit which adapts the output impedance to the crystal filter in the IA module.
The receiver circuitry has a central metering point for testing the injection signal level.

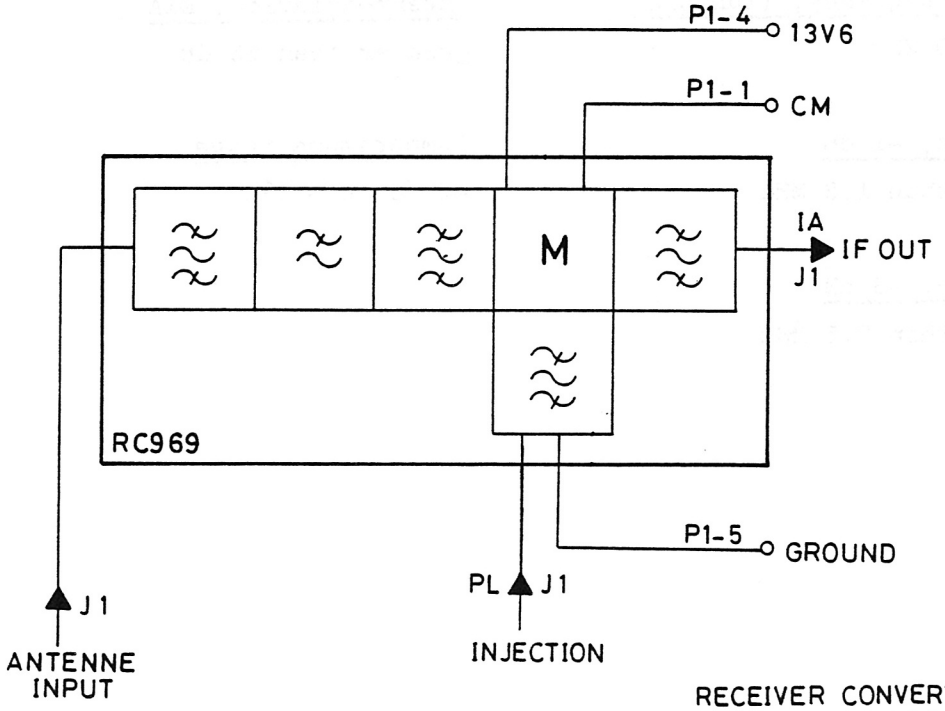

RECEIVER CONVERTER RC969
BLOCK DIAGRAM
D404.506

TECHNICAL SPECIFICATIONS

Antenna impedance
50 ohm

Signal level
less than 2 V

Injection impedance
50 ohm

Output, IF impedance
1600 ohm ±10%

Supply voltage
13.6 V ±20%

Current consumption
less than 5 mA

Antenna frequency, (tunable)
403 - 470 MHz

Bandwidth, -1 dB
greater than 1.8 MHz

Bandwidth, -3 dB
greater than 2.5 MHz

Bandwidth, -40 dB
less than 16 MHz

Injection frequency, (tunable)
381 - 449 MHz

Bandwidth, -3 dB
7 MHz

Bandwidth, -20 dB
40 MHz

Intermediate frequency
21.4 MHz

Sensitivity, 20 dB psoph. EMF
less than 0.75 dB

Intermodulation, EIA
greater than 85 dB

Temperature range
-40°C to +85°C

Storno

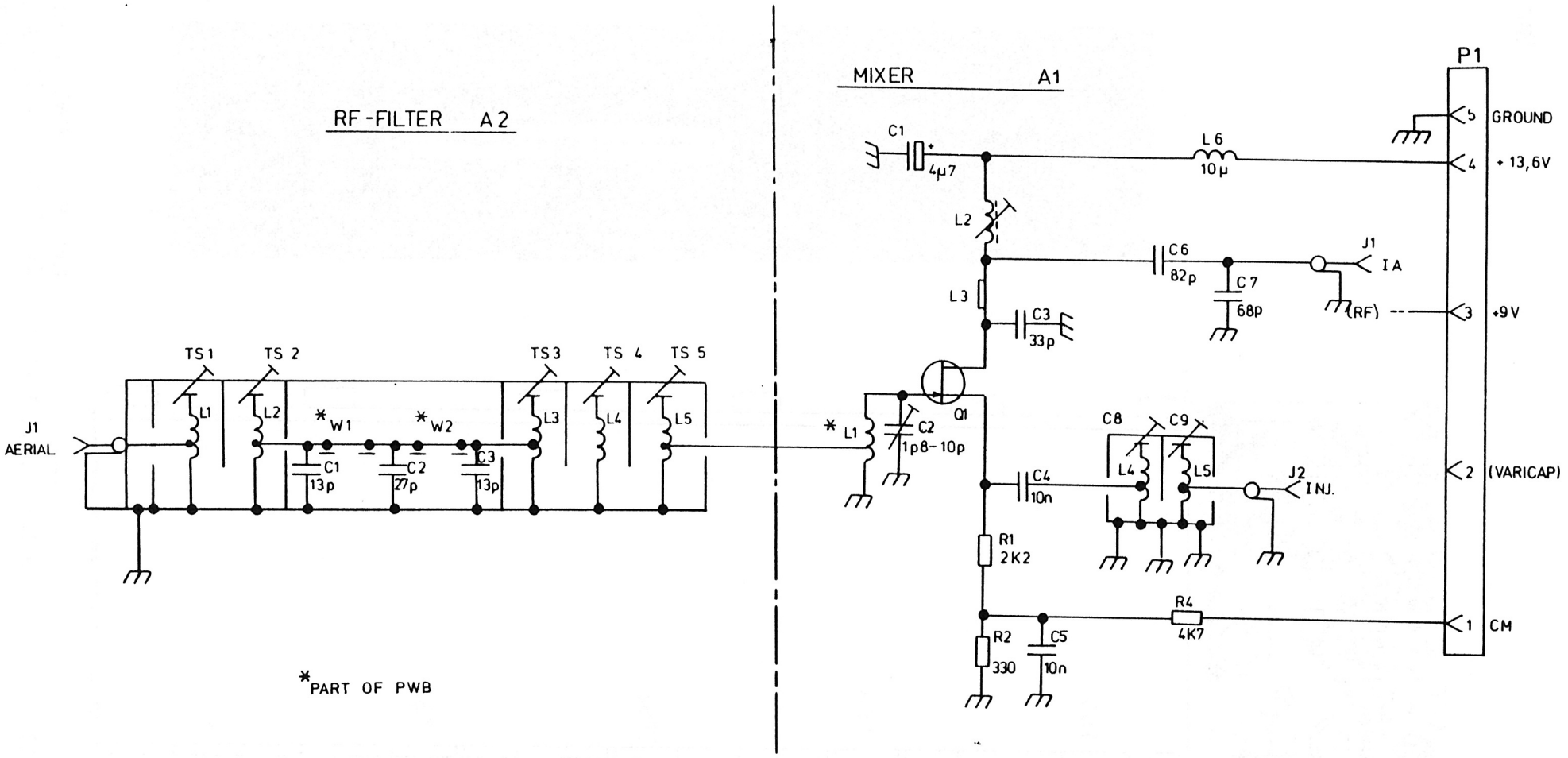

MODULE CODE NO. L855824G1

MOUNTED BOARD CODE NO. A1 L855016G1
A2 M906011G1

RECEIVER CONVERTER RC969

D404.508

Storno

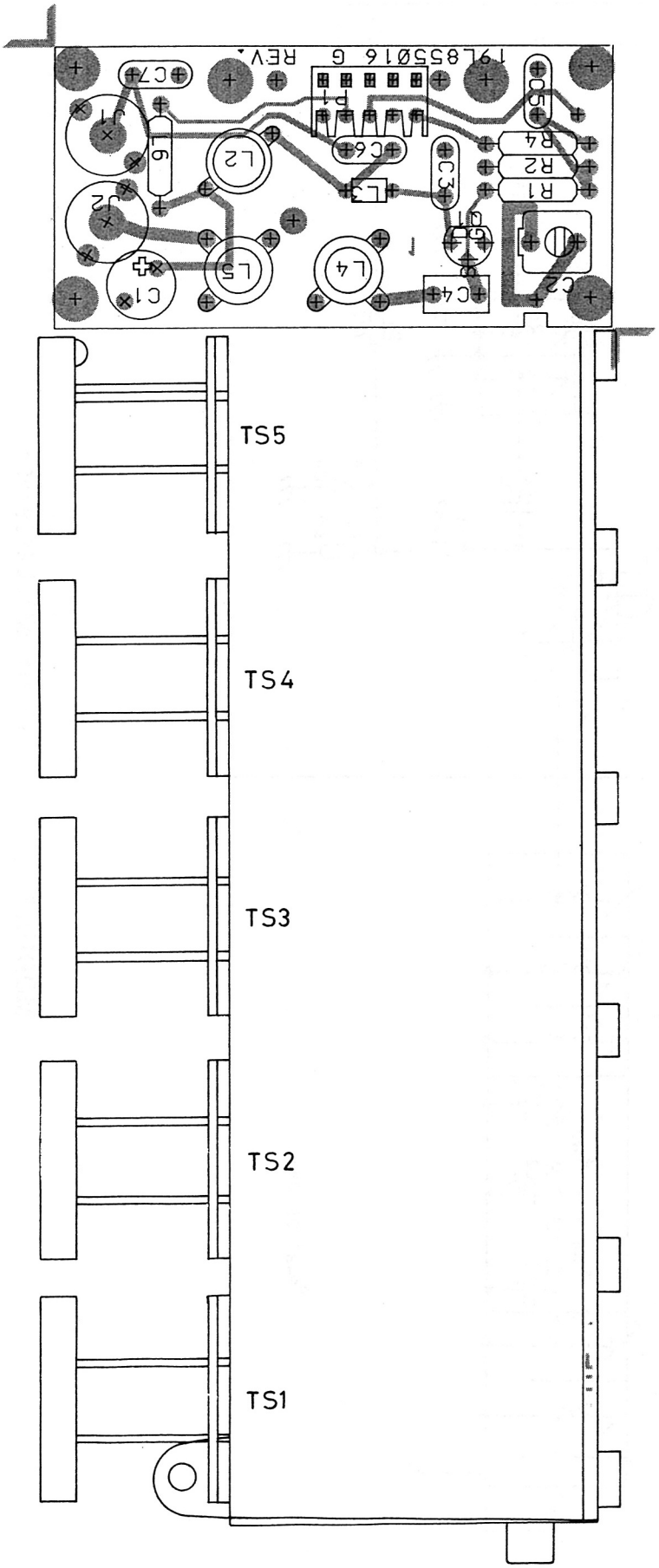

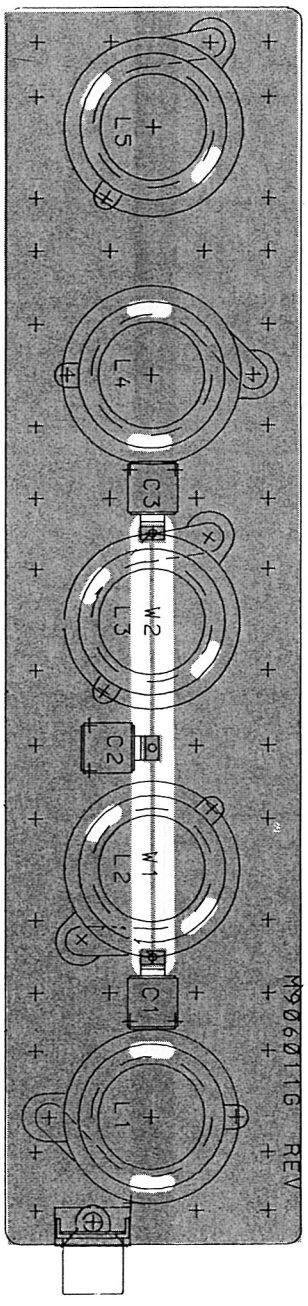

RECEIVER CONVERTER RC969
COMPONENT LAYOUT

D404.509

MODULE CODE NO. L855824G1

MOUNTED BOARD CODE NO. A1 L855016G1
A2 M906011G1

Pos.	Code No.	Description	Qt.
A001	L855016G1	ASM BD PW RC96X	1
A002	M906011G1	RECEIVER HELIX	1
0002	L855144P1	COVER	1
0003	J707755G1	NUT M9	5
0004	J706109P1	SCREW TUNING	2
0005	J706110P1	SPG TUN	2
0006	A700036P406	SCREW PAN HD M 3.0X6.0 PIN 17	
0008	M905016G11	HOUSING RC9XX	1
0013	J706108G1	ASM TUNING RC961	5
		A001 : L855016G1	
C001	A701534P6	CAP TA SOL 4U7 20% 35V	1
C002	J706003P1	CAP VAR FILM 1.8/10P 200V	1
C003	A700235P19	CAP CER N150 33P 5% 50V	1
C004	A700234P7	CAP PYES 10N 10% 50V	1
C005	A700234P7	CAP PYES 10N 10% 50V	1
C006	A700235P24	CAP CER N150 82P 5% 50V	1
C007	A700235P23	CAP CER N150 68P 5% 50V	1
J001	A700171P2	CONN PWB FEM PHONO	1
J002	A700171P2	CONN PWB FEM PHONO	1
L002	J706538G1	COIL	1
L003	J706128G1	COIL	1
L004	J706154P1	COIL RF FIX 7-1/2T TAP	1
L005	J706154P1	COIL RF FIX 7-1/2T TAP	1
L006	A700024P25	COIL RF FIX 10.0UH 10%	1
P001	A700041P4	CONN PWB FEM 05 CKT	1
Q001	J706038P1	TSTR JFET SI 2N5245	1
R002	A700019P31	RES DEPC 330R 5% 1/4W	1
R001	A700019P41	RES DEPC 2K2 5% 1/4W	1
R004	A700019P45	RES DEPC 4K7 5% 1/4W	1
0001	M905172P2R1	BD PW	1

Storno

Pos.	Code No.	Description	Qt.
		A002 : M906011G1	
C001	A700006P9	CAP MICA 13P 5% 100V	1
C002	A700006P19	CAP MICA 27P 5% 100V	1
C003	A700006P9	CAP MICA 13P 5% 100V	1
J001	A700171P2	CONN PWB FEM PHONO	1
L001	L855133P5	COIL HEL	1
L002	L855133P6	COIL HEL	1
L003	L855133P5	COIL HEL	1
L004	L855133P2	COIL HEL	1
L005	L855133P5	COIL HEL	1
0002	K805092P1	SUPPORT CONN	1
0008	M906012P1R0	BD PW	1

Storno

VR902

VOLTAGE REGULATOR

VR902 interfaces the 900 mobile to a 24 V supply. VR902 is a switching voltage regulator, which converts 21 V-36 V to 14 Volts. The module can deliver 8 Amperes, can stand a continuous short circuit on the output, and overload for a shorter period of time. The input has a reverse polarity protection diode.

VR902 includes a step down switch mode regulator, with constant switch frequency (about 32 kHz) and variable duty cycle. The module is contained in a shielded box, and has low-pass filters in the input and output, in order to minimize conducted and radiated switch noise.
A switch transistor is turned on and off by a square wave signal with constant frequency and variable duty cycle.

The output from the transistor is fed to a LC filter (L2-C8). When the transistor is on, the input voltage will be across the diode D3, and the coil L2 is energized. When the transistor is off, the voltage across D3 will be near zero, because the energy in the coil L2 will discharge, and thereby make D3 to conduct. The output from the filter will be equal to the mean value of the filter input voltage.

A negative feedback keeps the output voltage constant, independent of load and input voltage. A current sensing circuit provides overload and short circuit protection.

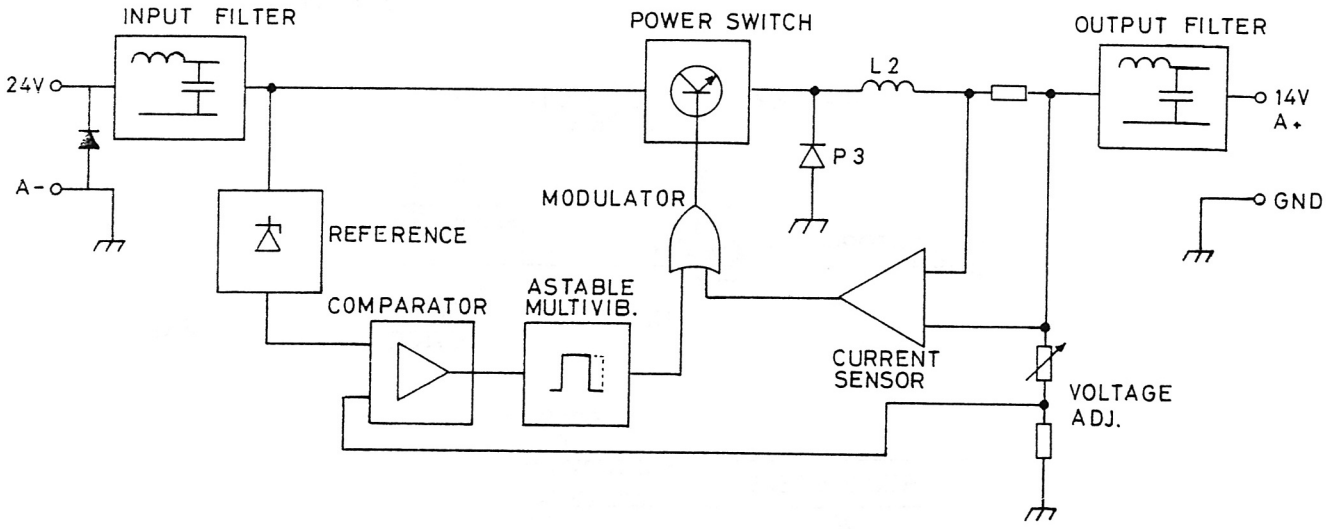

CIRCUIT DESCRIPTION

Input filter is formed by C1, C2, L1, C3 and C4. Output filter is L2, C8 and L3-C9 and C10.

Q1, D4, D5 and D2 makes a stable reference for the regulator. This reference is also used for supplying the operational amplifiers.

U1-1a is a free running astable multivibrator. It forms the 32 kHz signal used as switching frequency. U1-1b is used as buffer for the switching signal.
The necessary variation in duty cycle, is done

by gating together the two collectors from the buffer and the error amplifier.

The buffered output from the multivibrator is amplified in Q2 and Q3, before it is led to the switchtransistor Q4.

U1-1d senses the output current. If the current limit is exceeded, the output of U1-1d will pull down the output of the multivibrator, and thereby turn off the switch transistor.

MOUNTING INSTRUCTION

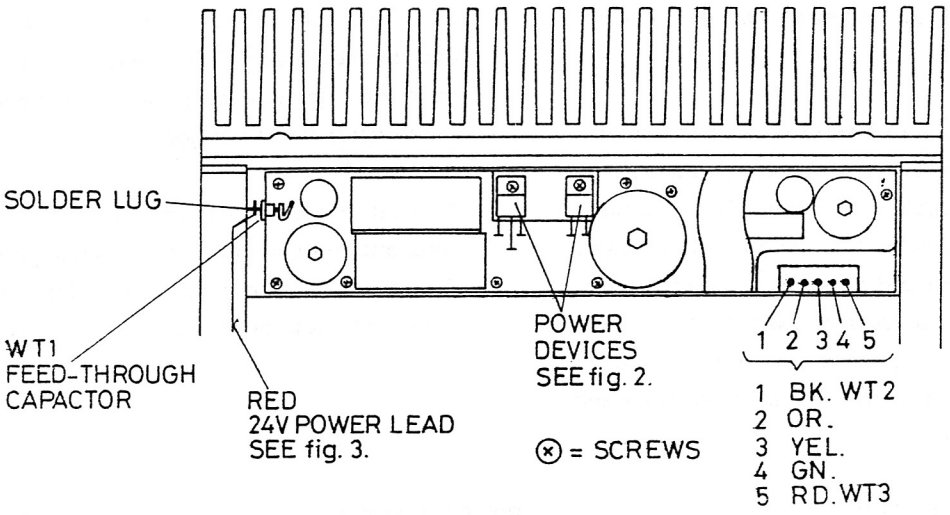

Fig. 1

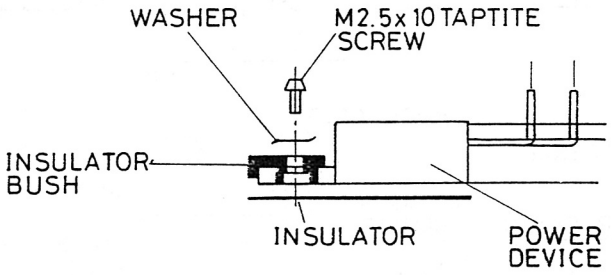

Fig. 2

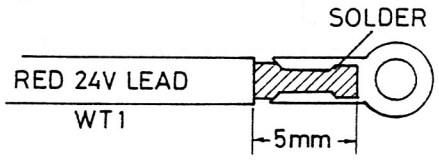

Fig. 3

MOUNTING INSTRUCTION VR902

D403.429/2

The VR902 regulator kit includes all necessary hardware and the following instruction should be used.

1. Apply thermal compound to both sides of the plastic insulators and place them on the heat sink where the power devices are mounted, see fic. 2.

2. Place the VR902 modules as shown in fig. 1. Adjust the power device holes to match the heat sink holes. Take care of the power leads WT1, WT2 and WT3.
   Screw the transistor and diode to the heat sink as shown in fig 2.

   Fasten the VR902 module and its can to the heat sink with screws and washers.

3. Solder the black and red power lead WT2 and WT3 to the feed-through capacitors. Take care not to short the red wire to the chassis screen.

4. Remove approx. 5 mm of insulation on the red 24 V input wire, WT1, and solder the lug to the wire. Solder the lug to the feed-through capacitor, see fig. 3.

5. Move contact 37 in cable C9CC05 to position 40. The modified cable designation then becomes C9CC06.

6. Connect 24 volts to the input of the radio and check the VR902 output voltage at WT3 for being 14 volts.

7. Install the VR902 cover.

TECHNICAL SPECIFICATIONS

Nominal Input voltage
27.2 V

Output voltage with no load
14.0 V ±0.1 V (25°C)

Internal impedance
100 mohm

Max. output current
8 A

Ripple (32 kHz)
≤50 mV pp

Short circuit ability
Continuous without damage

Temperature range
-40°C to 55°C

Storno

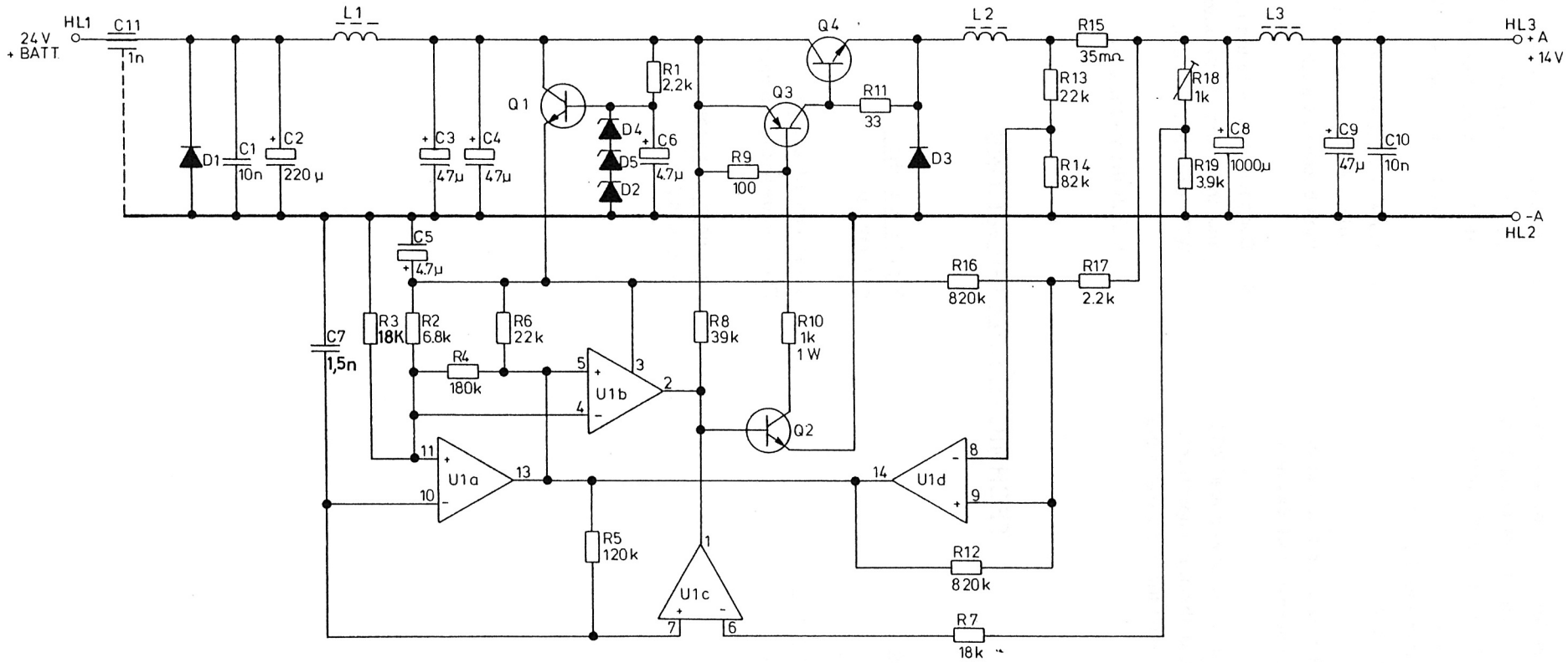

VOLTAGE REGULATOR 24/12V NEG. GND. VR902

L855018G1 D402.966/3

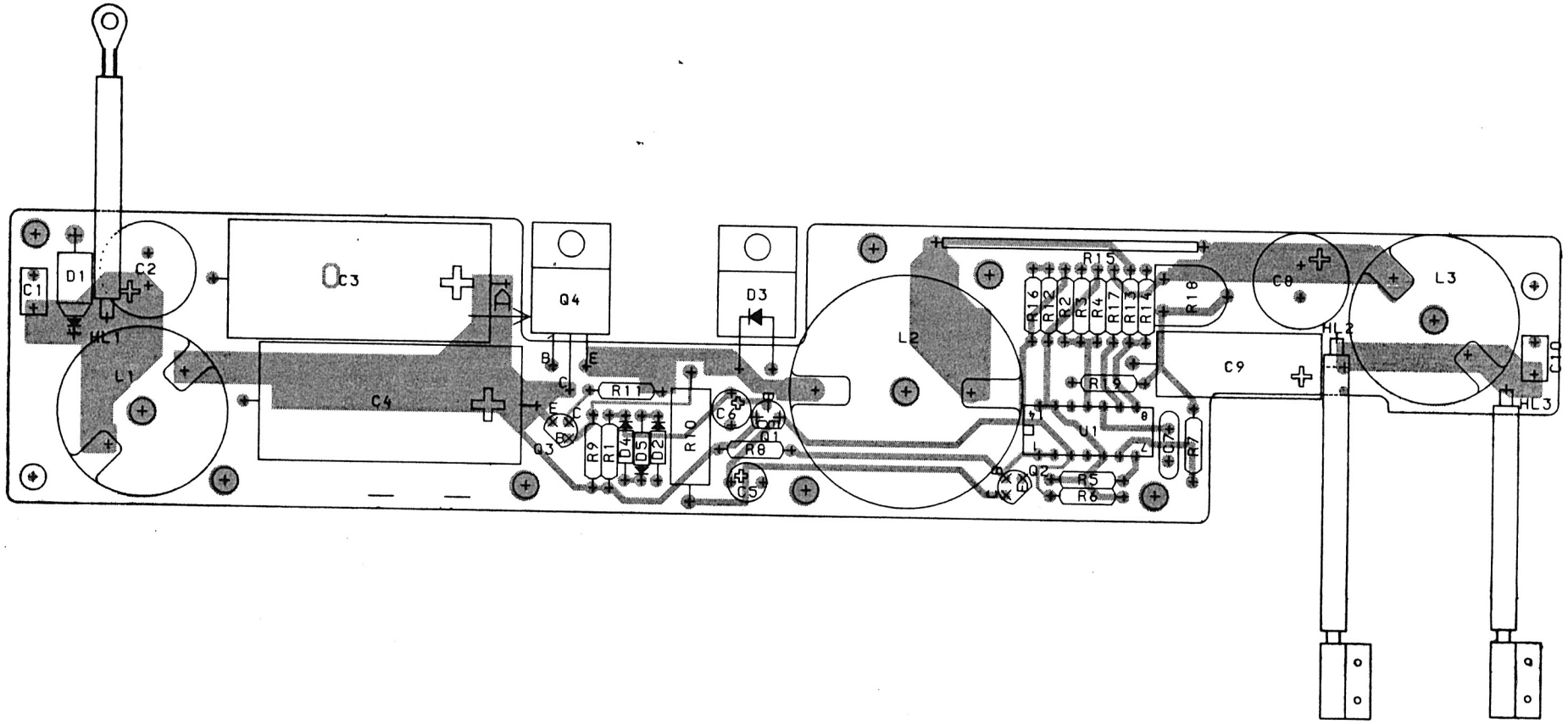

VOLTAGE REGULATOR VR902
COMPONENT LAYOUT

19L855018G1 | D403.165

ITEM NUMBER	DESCRIPTION
L855018G1	VR 902 24VDC TO 14VDC CONVERTER
M905029G1	SUB ASM : CPNT BD VR902
J706456G1	KIT HDW VR 902

P A R T S L I S T :

CIRCUIT POSITION	COMPONENT ITEM NUMBER	COMPONENT DESCRIPTION	QUANTITY TOTAL
08 :	J706456G1 :	KIT HDW VR 902 :	
	A700031P404	SCREW MACH P HD M3.0 X 4 MM	2
	A700036P310	SCR PAN HD M2.5 X 10 MM	2
	A700036P408	SCREW PAN HD M3.0 X 8 MM	6
	A700115P3	INSULATOR PLATE	2
	A701312P3	WASHER M2,2	2
	A701983P2	WASH INSUL , D3.1 X 6.0 MM	2
	J706076P5	WASH SPRING , D3.0 X 6.4 MM	6
	J706184P1	TERMINAL,SLDLS	1
		MECHANICAL PARTS :	
	A700031P404	SCREW MACH P HD M3.0 X 4 MM	2
	A701252P1	CONTACT	2
	A701983P2	BUSH INS	2
02	J706076P5	WASH SPRING D3.0 X 6.4 MM	2
	J706184P1	TERMINAL,SLDLS	1
	J707092P1	GASKET DISK	2
03	K805124G1	ASM CAN	1
07	L855153P1	INS SHEET	1
	M905044P1	COVER	1
A01 :	M905029G1 :	ASM : CPNT BD VR902 :	
C01	A700234P7	CAP POLY 10NF 50V	1
C02	J706005P14	CAP EL 220UF 40V	1
C03	J706020P1	CAP ELECT 47UF 63V	1
C04	J706020P1	CAP ELECT 47UF 63V	1
C05	A700003P6	CAP TAN 4,7UF 35V	1
C06	A700003P6	CAP TAN 4,7UF 35V	1
C07 *	A700233P8 *	CAP CER 1.5NF 50V, *	1
C08	J706005P7	CAP ELECT 1000UF 16V	1
C09	J706354P1	CAP ELECT 47UF 16V	1
C10	A700234P7	CAP POLY 10NF 50V	1
C11	A700124P1	CAP 1NF 0+100% , 500V	1
D1	J706026P1	DIO SI 1N5401	1
D2	A700025P8	DIO ZENR 6,8V 2% , 0,4W	1
D3	J706023P1	DIO BYW29 , 50V	1
D4	A700025P7	DIO ZENER SI 5,6V 2% , 0,4W	1

CIRCUIT POSITION	COMPONENT ITEM NUMBER	COMPONENT DESCRIPTION	QUANTITY TOTAL
D5	A700025P7	DIO ZENER SI 5,6V 2% , 0,4W	1
L1	J706067G1	COIL	1
L2	J706067G2	COIL	1
L3	J706067G1	COIL	1
Q1	A700017P1	TSTR NPN BC 548	1
Q2	A700017P1	TSTR NPN BC 548	1
Q3	J706530P1	TSTR PNP SI BC636	1
Q4	J706015P1	TSTR NPN POW. B44H8	1
R01	A700019P41	RES DEPOS 2,2K 0,25W	1
R02	A700019P47	RES DEPOS 6.8K 0.25W	1
R03 *	A700019P52 *	RES DEPOS 18K 0.25W, *	1
R04	A700019P64	RES DEPOS 180K OHM 0.25W	1
R05	A700019P62	RES DEPOS 120K OHM 0.25W	1
R06	A700019P53	RES DEPOS 22K 0,25W	1
R07	A700019P52	RES DEPOS 18K 0.25W	1
R08	A700019P56	RES DEPOS 39K OHM 0,25W	1
R09	A700019P25	RES DEPOS 100 OHM 0,25W	1
R10	A700112P63	RES DEPOS 1K OHM 1W	1
R11	A700019P19	RES DEPOS 33 OHM 0,25W	1
R12	A700019P72	RES DEPOS 820K OHM 0,25W	1
R13	A700019P41	RES DEPOS 2,2K 0,25W	1
R14	A700019P60	RES DEPOS 82K OHM 0,25W	1
R15	J706068P1	RES WIRE 0.037 OHM	1
R16	A700019P72	RES DEPOS 820K OHM 0,25W	1
R17	A700019P41	RES DEPOS 2,2K 0,25W	1
R18	J706008P1	RES VAR DEPOS 1 KOHM , 0,5W	1
R19	A700019P44	RES DEPOS 3,9KOHM	1
U1	J706018P1	INT CKT MC3302	1
006A	J706321G1	ASM WIRE VR 902	1
006B	J706321G2	ASM WIRE VR 902	1
006C	J706321G3	ASM WIRE VR 902	1
007	J706021P1	CORE CUP , FERRITE	2
008	J706021P2	CORE CUP , FERRITE	1
009	J706426P425	SCR BRASS	3
010	J706381P1	NUT BRASS SQ 5MM HEX	3
011	J706021P3	CORE CUP , FERRITE	2

Storno

VR903

VOLTAGE REGULATOR

The VR903 voltage regulator is a series regulator for generating +9 V with high stability for the receiver or transmitter modules. The regulator has a gate terminal which disables the regulator when pulled to chassis.

The regulator circuit is an integrated voltage regulator U1 with a series transistor Q3. The voltage regulator has an internal voltage reference and the output is adjustable by means of potentiometer R6. The output current passes through a resistor R1 and the voltage drop across this resistor controls the current limiting transistor Q1. If the current exceeds a predetermined value Q1 removes the base drive to the series transistor Q3. The voltage regulator is thus short circuit protected.
Transistor Q2 is normally on and enables the regulator but if the gate terminal is grounded the base voltage to transistor Q2 is removed and the transistor turns off. In this condition the output voltage is disabled.

SPECIFICATIONS

Input Voltage

Nominal:	12.0 V
Minimum:	10.8 V
Maximum:	15.6 V

Output voltage

9 V ±0.5%

Output current

0.5 A Continuous at 9 V output

Short circuit current

0.8 A

Internal current drain

ON: less than 6 mA

OFF: less than 7 mA

Voltage gate threshold

ON: 7 V to 15.6 V

Heat loss

less than 3.3 W; load 0.5 A

less than 12 W, short circuited output

Temperature range

$-40^{o}C$ to $+85^{o}C$

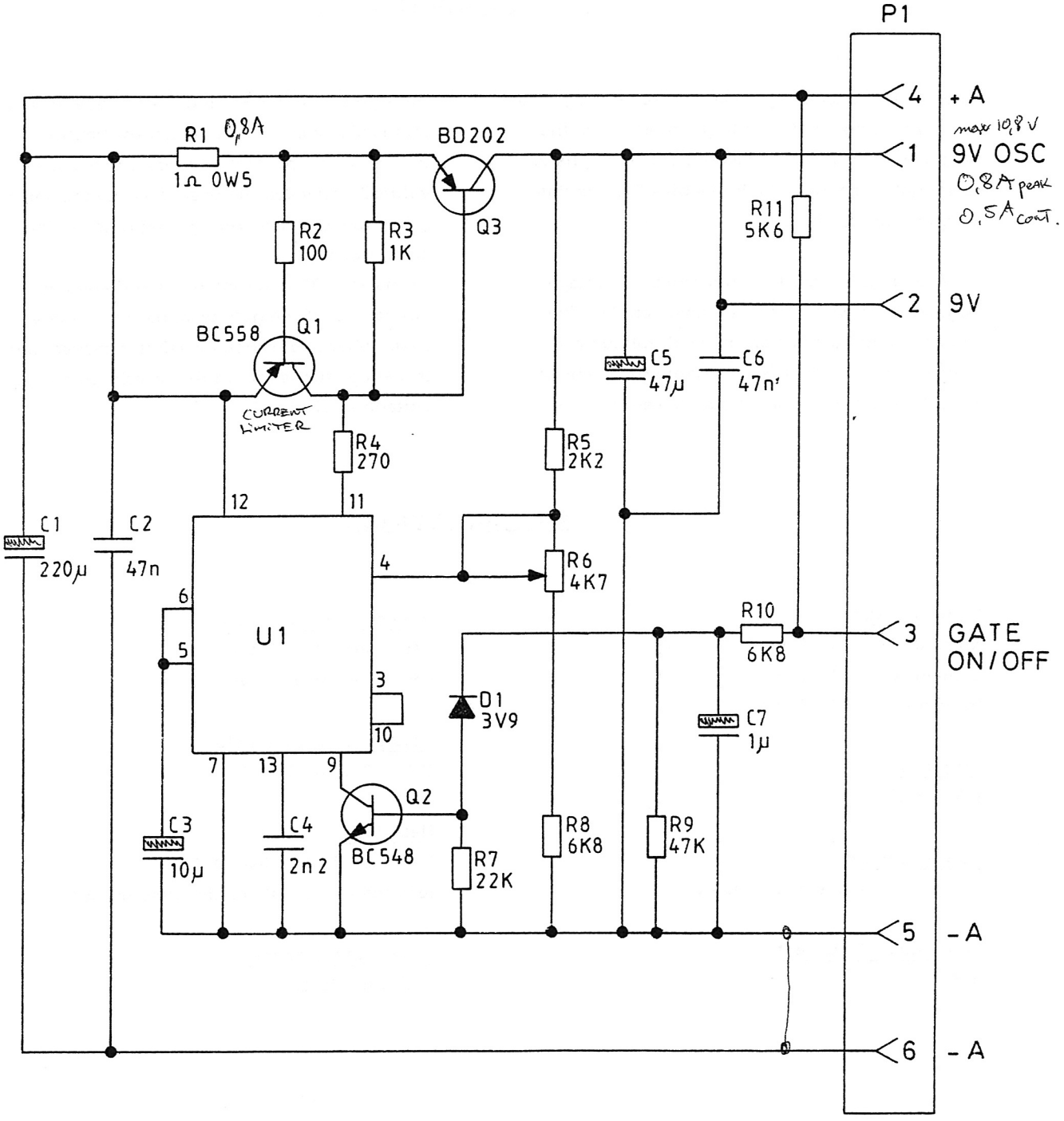

VOLTAGE REGULATOR VR903

CODE NO. L85557 4G1 | D403.866

Storno

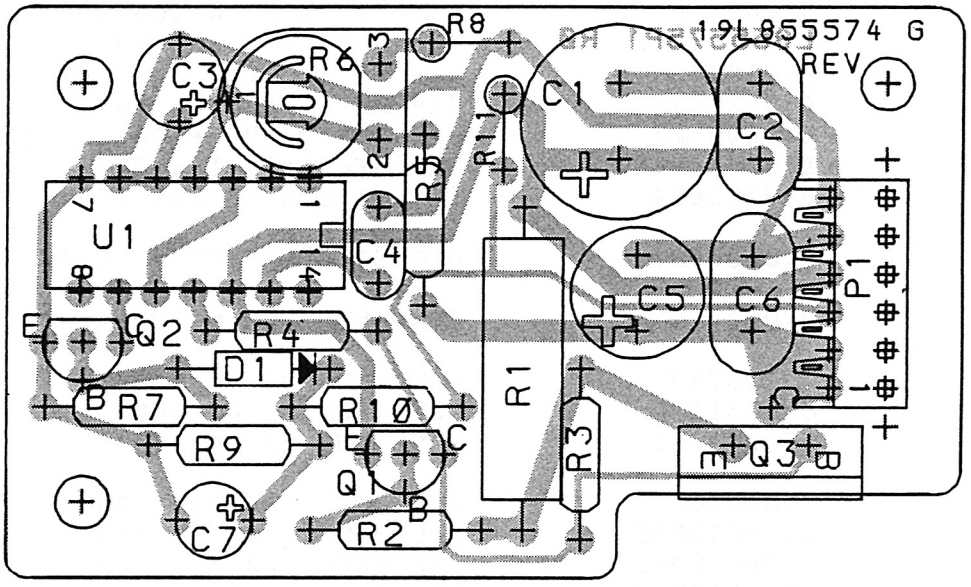

COMPONENT BOARD FOR VR903

CODE NO. L855574G1 D403.870/2

ITEM NUMBER	DESCRIPTION
L855574G1	VR 903 , CPNT BD PW., F. F9XXX

P A R T S L I S T :

CIRCUIT POSITION	COMPONENT ITEM NUMBER	COMPONENT DESCRIPTION	QUANTITY
C001	J706005P5	CAP ELECT 220U+100-10% 16V	1
C002	A700234P11	CAP PYES 47N 10% 50V	1
C003	A701534P7	CAP TA SOL 10U 20% 16V	1
C004	A700234P3	CAP PYES 2N2 10% 50V	1
C005	J706005P3	CAP ELECT 47U +100-10% 16V	1
C006	A700234P11	CAP PYES 47N 10% 50V	1
C007	A701534P4	CAP TA SOL 1U 20% 35V	1
D001	A700025P4	DIO SI ZENR 3V9 5% 0,4W	1
P001	A700041P5	CONN PWB FEM 06 CKT	1
Q001	J707674P1	TSTR PNP SI BC 558A/B	1
Q002	J707511P2	TSTR NPN SI BC 548C	1
Q003	J706016P1	TRST PNP SI BD 202	1
R001	J706056P1	RES DEPC 1R0 5% 1/2W	1
R002	A700019P25	RES DEPC 100R 5% 1/4W	1
R003	A700019P37	RES DEPC 1K0 5% 1/4W	1
R004	A700019P30	RES DEPC 270R 5% 1/4W	1
R005	A700019P41	RES DEPC 2K2 5% 1/4W	1
R006	J706008P8	RES VAR CERM 4K7 20% 1/2W	1
R007	A700019P53	RES DEPC 22K 5% 1/4W	1
R008	A702110P47	RES DEPC 6K8 5% 1/4W	1
R009	A700019P57	RES DEPC 47K 5% 1/4W	1
R010	A700019P47	RES DEPC 6K8 5% 1/4W	1
R011	A702110P46	RES DEPC 5K6 5% 1/4W	1
U001	J706017P1	IC LIN VR VAR 723	1

Storno

XO901/902

CRYSTAL OSCILLATOR

Functional Description

These oscillators covers the following frequencies:
Group 1, XO902, TX, 129.0 to 157.0 MHz
Group 2, XO901, RX, 122.0 to 150.0 MHz
Group 3, XO902, TX, 112.4 to 132.4 MHz
Group 4, XO901, RX, 105.0 to 125.3 MHz

Each oscillator has its own temperature compensation due to the tight frequency stability requirement. Each oscillator contains an oscillator circuit, a switching transistor and a buffer stage with tuned output.

Circuit Description

This oscillator is a Colpitts configuration using a bipolar transistor (Q2) and a third mode quartz crystal for stability. This circuit will oscillate at a frequency where the crystal impedance is resistive (serie-resonans). At this frequency a series resonant circuit is formed between the base of Q2 and ground. The coil L1 in this circuit is used to adjust the output frequency.

A grounded base bipolar transistor buffer amplifier (Q3) isolates the oscillator circuit from load variations.

At the collector of Q3, a selective network (L2, C14, C1) tuned to the third harmonic of the marked crystal frequency, provides attenuation of harmonic spurious and impedance matching to 50 ohm. A switch diode (D5) between the output of the tuned circuit and the load, isolates the unselected oscillator from the keyed module.

The oscillator circuit is turned on by grounding pin 2, which saturates Q1 and provides the required DC-voltage to Q2 and Q3.

In the TX-versions the processed audio is applied to the varactor diode D1 for true FM-modulation.
The varactor diode D2 performs the temperature compensation function. The compensation voltage applied to the varactor is generated by 3 NTC resistors (R17, R18, R19) and the resistor network U1 (thick-film).
The method is an analog compensation.

The compensating circuit is factory adjusted to be within tolerance and any change in the circuit is not possible.

TECHNICAL SPECIFICATIONS

RF output impedance

50 ohm

Supply Voltage

9 V ±0.5%

Current consumption

Less than 10 mA (keyed)
Less than 1 mA (standby)

Select line

Low to select: less than 1.0 V
High to unkey: more than 8.0 V

Audio input impedance

More than 20 Kohm

Frequency range

Group	Crystal freq. in MHz	Output freq. in MHz
1	43.00-52.33	129.0-157.0
2	40.67-50.00	122.0-150.0
3	37.47-44.13	112.4-132.4
4	35.00-41.77	105.0-125.3

Frequency stability

±2.0 PPM at -30°C to +75°C

Reference temperature

+25°C

Output level

+3 dBm ±3 dB

Storno

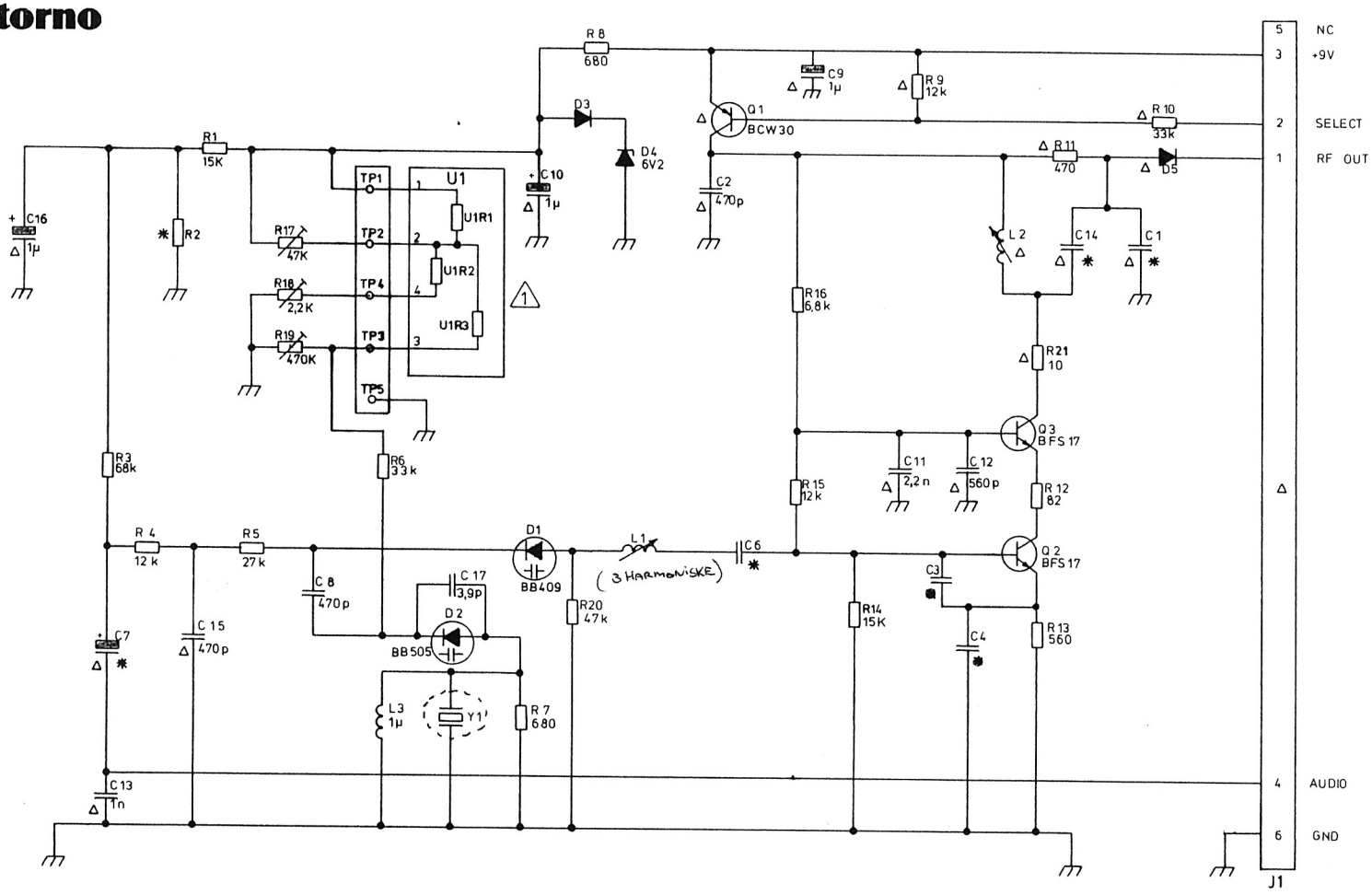

NOTES:

1. U1: IS A RESISTOR NETWORK ON THICKFILM
2. ALL COMPONENT MARKED WITH △ SHOWS THE ONLY COMPONENTS THAT CAN BE REPLACED

* VALUE C AND R

MODULE	FREQUENCY	CODE NO. MOUNTED BOARD	C1	C3	C4	C6	C7	C14	R2
X0902	129 - 157MHz	M905613G1	47p	33p	120p	39p	1µ	33p	—
X0901	122 - 150MHz	" - " G2	82p	33p	120p	68p	—	27p	—
X0902	112,4-132,4MHz	" - " G3	100p	39p	150p	470p	1µ	39p	33p
X0901	105 - 125,3MHz	" - " G4	100p	39p	150p	470p	—	47p	33p

Y1 ca. 50 MHz

CRYSTAL OSCILLATORS X0901/902

REV.A

D403.481/2

Storno

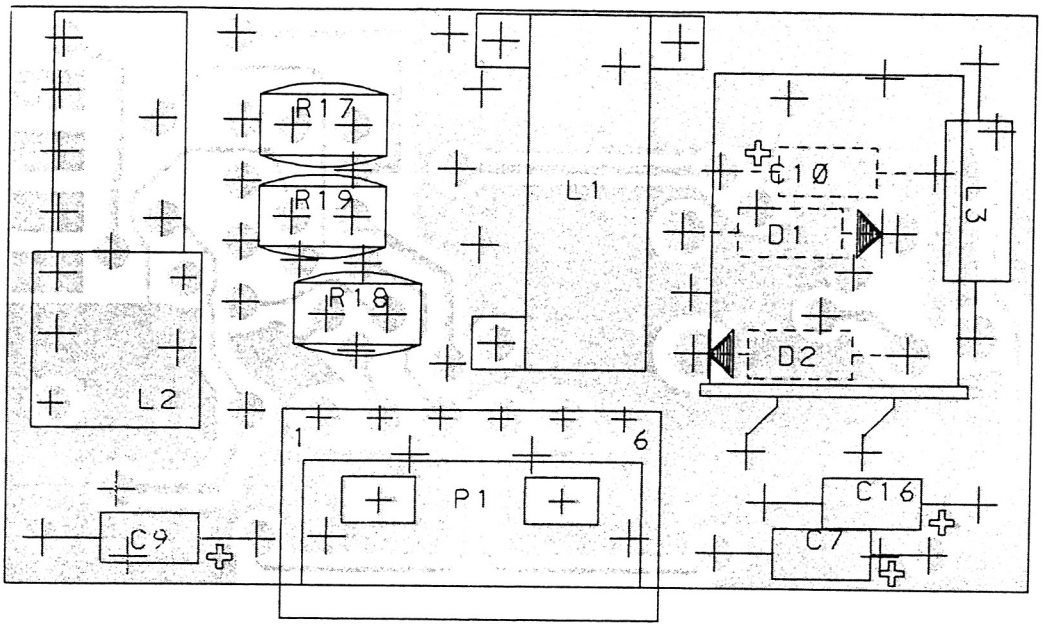

SOLDER/CHIP SIDE

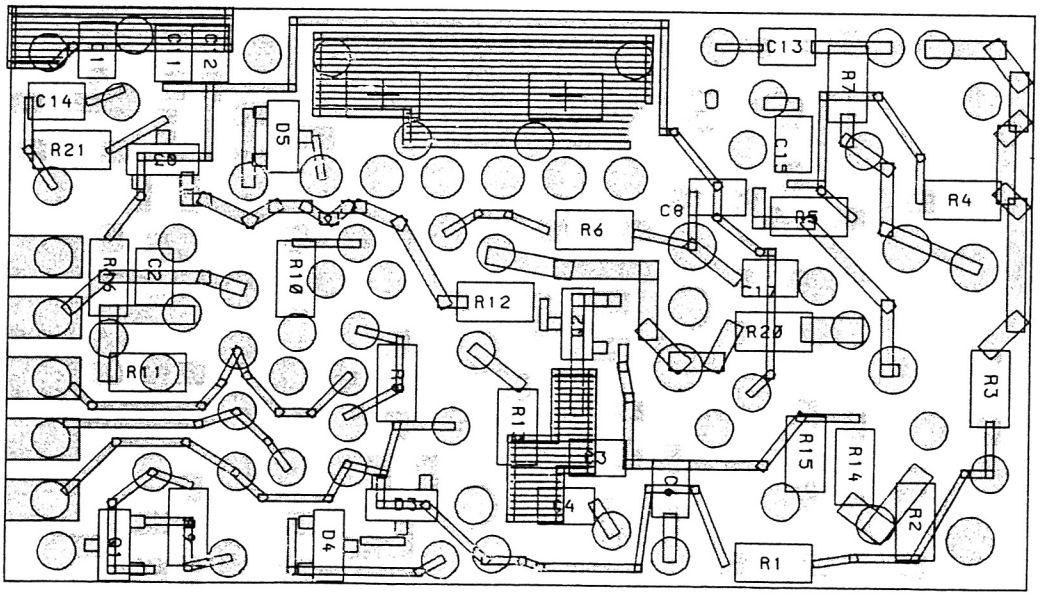

MODULE	CODE NO.	FREQUENCY
XO902	M905613G1	129 - 157MHz
XO901	" - " G2	122 - 150MHz
XO902	" - " G3	112,4 - 132,4MHz
XO901	" - " G4	105 - 125,3MHz

CRYSTAL OSCILLATORS XO901/902
COMPONENT LAYOUT

D403.482/2

ITEM NUMBER	DESCRIPTION
J707948G2	XO 901 , RX : 122.0 - 150.0MHZ, F. F966
J707948G4	XO 901 , RX : 105.0 - 125.3MHZ, F. F955
M905613G2	A001: OSC BD 122.0 - 150.0 MHZ
M905613G4	A001: OSC BD 105.0 - 125.3 MHZ

P A R T S L I S T :

CIRCUIT POSITION	COMPONENT ITEM NUMBER	COMPONENT DESCRIPTION	QUANTITY	
A001	M905613G2	OSC BD 122 - 150 MHZ	1	(SEE
OR -				BELOW:
A001	M905613G4	OSC BD 105.0 - 125.3 MHZ	1	(SEE
				BELOW:
U001	L855471G1	RES NETWORK	1	
Y001	J707566P6	X-TAL , 31 - 66 MHZ	1	
0004	C850517P3	CAN	1	
0005	C850688P1	RET	1	
0007	A701680P1	INSULATOR	1	
0010	J708058P1	LBL PPR	1	
A001 :	M905613G2 :	OSC BD 122 - 150 MHZ :		
OR -				
A001 :	M905613G4 :	OSC BD 105.0 - 125.3 MHZ :		
C001	A700007P57	CAP CER NPO 82P 5% 50V	1	F.-G2
C001	A700007P61	CAP CER NPO 100P 5% 50V	1	F.-G4
C002	A700010P3	CAP CER NPO 470P 5% 50V	1	ALL
C003	A700007P37	CAP CER NPO 33P 5% 50V	1	F.-G2
C003	A700088P404	CAP CER N750 39P 5% 8Z	1	F.-G4
C004	A700007P63	CAP CER NPO 120P 5% 50V	1	F.-G2
C004	A700007P65	CAP CER NPO 150P 5% 50V	1	F.-G4
C006	A700007P53	CAP CER NPO 68P 5% 50V	1	F.-G2
C006	A700010P3	CAP CER NPO 470P 5% 50V	1	F.-G4
C008	A700010P3	CAP CER NPO 470P 5% 50V	1	ALL
C009	B800650P13	CAP TA SOL 1U0 10V	1	ALL
C010	B800650P13	CAP TA SOL 1U0 10V	1	ALL
C011	A700058P7	CAP CER 2N2 10% W3	1	ALL
C012	A700010P5	CAP CER NPO 560P 5% 50V	1	ALL
C014	A700007P33	CAP CER NPO 27P 5% 50V	1	F.-G2
C014	A700007P45	CAP CER NPO 47P 5% 50V	1	F.-G4
C015	A700010P3	CAP CER NPO 470P 5% 50V	1	ALL
C016	B800650P13	CAP TA SOL 1U0 10V	1	ALL
C017	A700007P8	CAP CER NPO 3P9 0.5P 50V	1	ALL
D001	A700073P1	DIO SI CAP BB 409	1	ALL

CIRCUIT POSITION	COMPONENT ITEM NUMBER	COMPONENT DESCRIPTION	QUANTITY	
D002	J706007P1	DIO SI CAP BB 505B	1	ALL
D003	J706001P1	DIO SI SIG BAV 74	1	ALL
D004	A700083P12	DIO SI ZENR 6V2 5% 0,2W	1	ALL
D005	A700155P1	DIO SI SIG BAT 18	1	ALL
L001	B800669P72	COIL RF VAR 18-1/2T	1	F.-G2
L001	B800669P85	COIL RF VAR	1	F.-G4
L002	B800668P15	COIL RF VAR 2-1/2T RED	1	ALL
L003	A700024P14	COIL FIX 1,2UH 10%	1	ALL
P001	A701486P5	CONNECTOR 6 POS	1	ALL
Q001	J706004P1	TSTR PNP SI BCW 30	1	ALL
Q002	A700236P1	TSTR NPN SI BFS 17	1	ALL
Q003	A700236P1	TSTR NPN SI BFS 17	1	ALL
R001	J707633P153	RES MFLM 15K 5% 1/8W	1	ALL
R002	J707633P333	RES MFLM 33K 5% 1/8W	1	F.-G4
R003	J707633P683	RES MFLM 68K 5% 1/8W	1	ALL
R004	J707633P123	RES MFLM 12K 5% 1/8W	1	ALL
R005	J707633P273	RES MFLM 27K 5% 1/8W	1	ALL
R006	J707633P333	RES MFLM 33K 5% 1/8W	1	ALL
R007	J707633P681	RES MFLM 680R 5% 1/8W	1	ALL
R008	J707633P681	RES MFLM 680R 5% 1/8W	1	ALL
R009	J707633P123	RES MFLM 12K 5% 1/8W	1	ALL
R010	J707633P333	RES MFLM 33K 5% 1/8W	1	ALL
R011	J707633P471	RES MFLM 470R 5% 1/8W	1	ALL
R012	J707633P820	RES MFLM 82R 5% 1/8W	1	ALL
R013	J707633P561	RES MFLM 560R 5% 1/8W	1	ALL
R014	J707633P153	RES MFLM 15K 5% 1/8W	1	ALL
R015	J707633P123	RES MFLM 12K 5% 1/8W	1	ALL
R016	J707633P682	RES MFLM 6K8 5% 1/8W	1	ALL
R017	J707406P5	RES THERM NTC 47K 10%	1	ALL
R018	J707406P4	RES THERM NTC 2K2 10%	1	ALL
R019	J707406P6	RES THERM NTC 470K 10%	1	ALL
R020	J707633P473	RES MFLM 47K 5% 1/8W	1	ALL
R021	J707633P100	RES MFLM 10R 5% 1/8W	1	ALL
0008	J707831P1	SHIELD	1	ALL
0009	J707972P1	LBL	1	ALL

ITEM NUMBER	DESCRIPTION
J707948G1	XO 902 , TX : 129.0 - 157.0MHZ, F. F966X
J707948G3	XO 902 , TX : 112.4 - 132.4MHZ, F. F955X
M905613G1	A001: OSC BD 129.0 - 157.0 MHZ
M905613G3	A001: OSC BD 112.4 - 132.4 MHZ

P A R T S L I S T :

CIRCUIT POSITION	COMPONENT ITEM NUMBER	COMPONENT DESCRIPTION	QUANTITY	
A001	M905613G1	OSC BD 129 - 157 MHZ	1	(SEE BELOW:
OR -				
A001	M905613G3	OSC BD 112.4 - 132.4 MHZ	1	(SEE BELOW:
U001	L855471G1	RES NETWORK	1	
Y001	J707566P6	X-TAL , 31 - 66 MHZ	1	
0004	C850517P3	CAN	1	
0005	C850688P1	RET	1	
0007	A701680P1	INSULATOR	1	
0010	J708058P1	LBL PPR	1	
A001 :	M905613G1 :	OSC BD 129 - 157 MHZ :		
OR -				
A001 :	M905613G3 :	OSC BD 112.4 - 132.4 MHZ :		
C001	A700007P45	CAP CER NPO 47P 5% 50V	1	F.-G1
C001	A700007P61	CAP CER NPO 100P 5% 50V	1	F.-G3
C002	A700010P3	CAP CER NPO 470P 5% 50V	1	ALL
C003	A700007P37	CAP CER NPO 33P 5% 50V	1	F.-G1
C003	A700088P404	CAP CER N750 39P 5% 8Z	1	F.-G3
C004	A700007P63	CAP CER NPO 120P 5% 50V	1	F.-G1
C004	A700007P65	CAP CER NPO 150P 5% 50V	1	F.-G3
C006	A700007P41	CAP CER NPO 39P 5% 50V	1	F.-G1
C006	A700010P3	CAP CER NPO 470P 5% 50V	1	F.-G3
C007	B800650P13	CAP TA SOL 1U0 10V	1	ALL
C008	A700010P3	CAP CER NPO 470P 5% 50V	1	ALL
C009	B800650P13	CAP TA SOL 1U0 10V	1	ALL
C010	B800650P13	CAP TA SOL 1U0 10V	1	ALL
C011	A700058P7	CAP CER 2N2 10% W3	1	ALL
C012	A700010P5	CAP CER NPO 560P 5% 50V	1	ALL
C013	A700011P3	CAP CER CL2 1N 20% 50V	1	ALL
C014	A700007P37	CAP CER NPO 33P 5% 50V	1	F.-G1
C014	A700007P41	CAP CER NPO 39P 5% 50V	1	F.-G3
C015	A700010P3	CAP CER NPO 470P 5% 50V	1	ALL
C016	B800650P13	CAP TA SOL 1U0 10V	1	ALL
C017	A700007P8	CAP CER NPO 3P9 0.5P 50V	1	ALL

CIRCUIT POSITION	COMPONENT ITEM NUMBER	COMPONENT DESCRIPTION	QUANTITY	
D001	A700073P1	DIO SI CAP BB 409	1	ALL
D002	J706007P1	DIO SI CAP BB 505B	1	ALL
D003	J706001P1	DIO SI SIG BAV 74	1	ALL
D004	A700083P12	DIO SI ZENR 6V2 5% 0,2W	1	ALL
D005	A700155P1	DIO SI SIG BAT 18	1	ALL
L001	B800669P72	COIL RF VAR 18-1/2T	1	
L002	B800668P15	COIL RF VAR 2-1/2T RED	1	ALL
L003	A700024P14	COIL FIX 1,2UH 10%	1	ALL
P001	A701486P5	CONNECTOR 6 POS	1	ALL
Q001	J706004P1	TSTR PNP SI BCW 30	1	ALL
Q002	A700236P1	TSTR NPN SI BFS 17	1	ALL
Q003	A700236P1	TSTR NPN SI BFS 17	1	ALL
R001	J707633P153	RES MFLM 15K 5% 1/8W	1	ALL
R002	J707633P333	RES MFLM 33K 5% 1/8W	1	F.-G3
R003	J707633P683	RES MFLM 68K 5% 1/8W	1	ALL
R004	J707633P123	RES MFLM 12K 5% 1/8W	1	ALL
R005	J707633P273	RES MFLM 27K 5% 1/8W	1	ALL
R006	J707633P333	RES MFLM 33K 5% 1/8W	1	ALL
R007	J707633P681	RES MFLM 680R 5% 1/8W	1	ALL
R008	J707633P681	RES MFLM 680R 5% 1/8W	1	ALL
R009	J707633P123	RES MFLM 12K 5% 1/8W	1	ALL
R010	J707633P333	RES MFLM 33K 5% 1/8W	1	ALL
R011	J707633P471	RES MFLM 470R 5% 1/8W	1	ALL
R012	J707633P820	RES MFLM 82R 5% 1/8W	1	ALL
R013	J707633P561	RES MFLM 560R 5% 1/8W	1	ALL
R014	J707633P153	RES MFLM 15K 5% 1/8W	1	ALL
R015	J707633P123	RES MFLM 12K 5% 1/8W	1	ALL
R016	J707633P682	RES MFLM 6K8 5% 1/8W	1	ALL
R017	J707406P5	RES THERM NTC 47K 10%	1	ALL
R018	J707406P4	RES THERM NTC 2K2 10%	1	ALL
R019	J707406P6	RES THERM NTC 470K 10%	1	ALL
R020	J707633P473	RES MFLM 47K 5% 1/8W	1	ALL
R021	J707633P100	RES MFLM 10R 5% 1/8W	1	ALL
0008	J707831P1	SHIELD	1	
0009	J707972P1	LBL	1	