STORNOPHONE 6000

MAINTENANCE MANUAL

VOLUME III

APRIL 1990

PUBLICATION NO: 8311.6005-02

STORNOPHPONE 6000
MAINTENANCE MANUAL
VOLUME III

FUNCTIONAL AND INSTALLATION TEST	1
TECHNICAL SPECIFICATIONS	2
RADIO FREQUENCY BOARD AND XO6xxx & RA600X	3
	4
	5
	6
	7
	8
	9
	10

OTHER MAINTENANCE MANUAL:
VOLUME I, II, IV
AND ADJUSTMENT AND SOFTWARE

TEST

- Functional test
- Installation test

Storno

FUNCTIONAL TEST

STORNOPHONE 6000

GENERAL

When the radiotelephone has been installed in the vehicle it must be checked for proper operation in the radiosystem in which it is going to work. If the functional test is not passed successfully the total installation work should be checked and any errors corrected. The test will establish fact about where the fault is located.

TEST INSTRUMENTS

Universal instrument, e.g. AV08.
Directional throughline wattmeter, e.g. Bird 43.

TEST PROCEDURE

1. Turn the radio on.
   Check the radio display to see that the display layout is correct as specified by the customer, refer to operating instructions.
2. Make a call to the base station or the system dispatcher. Perform a speech test for clear reception and transmission. During the test turn the volume up and down and finally ask for a call to the mobile. Remember to give the mobile identification number or tone call number, if used.
3. Hang up and turn the horn alarm on, if installed. Wait for the call from the base station.
4. When the call is received check that the alert tone is sounded and the horn alarm is activated, if used.
   Check the display for display of the correct information, if used, refer to operating instruction and customer programming. Perform speech test and hang up.

FAULT TRACING

If the radio is operating properly but communication quality is poor the reason must be found somewhere in the communication path, i.e. antenna, antenna cable, microphone or microtelephone, or loudspeaker.

1. Check antenna installation, antenna cable and antenna connector for short circuits. Use the ohmmeter to measure the resistance between the screen of the antenna cable and the vehicle chassis. If the resistance is not close to zero ohm the antenna base should be inspected for proper installation. Especially check for rust or paint around the mounting hole, both inside and outside. Measure the resistance between the center conductor and the screen of the antenna cable. Resistance should be nearly ifinite and if not there is

a short circuit somewhere in the connector, the antenna base or the cable itself. Insert the directional wattmeter in the antenna feeder close to the radiotelephone and measure forward and return power during transmission. The ratio between forward power and return power can be used to calculate the standing wave ratio (SWR) which should be less than 1.5.

$$SWR = \frac{1 + \sqrt{\frac{\text{Return power}}{\text{Forward power}}}}{1 - \sqrt{\frac{\text{Return power}}{\text{Forward power}}}}$$

Example : Forward power 24 Watt
Return power 1.2 Watt

$$SWR = \frac{1 + \sqrt{\frac{1.2}{24}}}{1 - \sqrt{\frac{1.2}{24}}} = 1.5$$

If the SWR is too high the antenna is not properly matched to the cable and must be adjusted, refer to the antenna manufacturer's instructions.

2. If speech quality is poor the microphone or microtelephone installation should be inspected. Check cables and connectors for proper installation and termination in the junction box. Eventually replace the microphone or microtelephone with an item that is known to be operating satisfactorily.
If reception quality is poor the same procedure can be applied to the loudspeaker or handset whichever is used in the installation.

3. Check other accessory items, key switch, horn alarm circuit, ignition switch cable etc. by inspection and for replacement depending on which function fails to operate properly.

4. If the radio communication quality is good but noise can be heard in the loudspeaker or microtelephone the problem can be insufficient noise suppression of the vehicle's electrical system. Such noise is usually only present when a fan, the windshield wiper etc. are turned on or depends on the motor revolutions. In these cases proper noise suppression components must be installed to solve the problem.

Storno

INSTALLATION TEST

STORNOPHONE 6000

If the radio fails to pass the functional test and the fault cannot be found in the antenna or the accessories the fault must be located in the radio unit, the battery cable, the junction box or the control head.
If the radio cannot turn on perform the following checks:

1. Use a voltmeter to check the battery voltage and polarity. The battery voltage should be approximately 13.2. V and the negative terminal connected to chassis.
2. Check the battery terminals and the cable connections for corroded joints. Clean if necessary and reinstall cables.
3. Check the radio fuses with an ohmmeter. The resistance measured between the ends should be close to zero ohm. Replace fuses if necessary.
4. Measure the voltage at the (+) and (-) battery terminals in the junction box and at the radio connector between pin 1 (+) and pin 25 (-). The voltage should be equal to the battery voltage.
   If not, the battery cable should be inspected for proper installation, loose joints or short circuits.
5. Check all cables and connectors for broken wires (visual inspection) and proper orientation in the junction box. Refer to installation and cable drawings if any loose wires or cables are found.

If the radio after these checks cannot be turned on the radio unit should be suspected to be faulty. Replace the radio unit with a space radio which is known to be operating properly or test the radio in a bench installation. If the spare radio is operating satisfactorily the original radio must be faulty and should be turned in for repair.
If the spare radio turns on but the functional test shows that an accessory item is not working replace the suspected item.
In remote installations where the control is separated from the radio unit special attention should be paid to the control head installation. If necessary test the control head in conjunction with a radio which is operating properly.

SPECIFICATIONS

- Technical specifications

TECHNICAL SPECIFICATIONS

CQM6xxx

GENERAL

TYPE CQM		6332	6333	6334	6112	6113	6114	6774	6662	6663	6664
Freq. & Band Splits	MHz	66-88			136-174			174-210 190-225	403-470		
Channel Spacing	kHz	25	20	12.5	25	20	12.5	12.5	25	20	12.5
Channel raster	kHz	6.25	5	6.25	6.25	5	6.25	6.25	12.5	10	6.25
No. of Channels		Up to 99 with CL6003									
Mode		Simplex or semi duplex									
Channel scan	ms	5 for one channel, 10 for 1 MHz									
Frequency Stability (Extreme)	kHz	±1.35		±1		±2		±1.5	±2.5		±1.5
Temperature range	°C	-25 to +60									
Antenna impedance	Ohm	50									
Speaker	Ohm	4 to 8, balanced (DC power at LS lines)									
Supply	V	13.2 V nominal, 10.8 V to 15.6 V at extreme conditions									
Current drain Off RX (stby) TX (6 W) TX (10 W) TX (25 W)	mA	Including CF (300 mA) and CL (220 mA) 27 720 4020 5020 7220									
Dimensions	mm	D = 175 W = 181 H = 51									
Weight	kg	2.2 incl. Control head (.25) and Cassette (.4)									
CTCSS Signalling: In accordance with EIA specification RS-220											

RECEIVER

TYPE CQM		6332 6333	6334	6112 6113	6114	6774	6662 6663	6664
Sensitivity	uV/EMF	0.7	1.0	0.7	1.0	1.15	0.8	1.15
20 dB p-SINAD	dBm	-116	-113	-116	-113	-112	-115	-112
RF Bandwidth	MHz	Varactor tuned to cover total band or band split						
AF output power	W	10 EIA, 8 CEPT method						
Distorsion	%	4 (measured at 4 W)						
Audio freq. bandwith	Hz	300-3000 300-3000	300-2550	300-3000	300-3000	300-2550	300-2550	300-3000 300-3000	300-2550
Audio freq. resp.		-6 dB/oct. phase modulation caracteristics						
Tolerance	dB	+1 -3	+1* -3	+1 -3	+1* -3	+1 -3	+1* -3	+1 -3
Hum & noise	dB	-40 (EIA, unweighted)						
Radiated spurious	nW	2 (-57 dBm to resonant substition dipole)						
Conducted Spurious	dBm	-57						
RX attack time	ms	25 (EIA)						
Recovery time	ms	35						
Adjacent channel selectivity	dB	CEPT 70 2 uV	FTZ 70 rel.	CEPT 60 2 uV	CEPT 70 2 uV	FTZ 70 rel.	CEPT 60 2 uV	CEPT 60 2 uV	CEPT 70 2 uV	FTZ 70 rel.	CEPT 60 2 uV
Blocking	dB/uV	100 (CEPT method)						
Intermodulation	dB	CEPT 76 1 uV	FTZ 66 +80 2 uV	CEPT 70 1 uV	CEPT 76 1 uV	FTZ 66 +80 2 uV	CEPT 70 1 uV	CEPT 70 1 uV	CEPT 76 1 uV	FTZ 66 +80 3 uV	CEPT 70 1 uV
Spurious rejection	dB/uV	76 (CEPT method)						
CO-chan. rejection	dB	8						
Sq.sensitivity	dB	10 - 12 dB SINAD (EIA)**						
Squelch tail	ms	15 (EIA)						
Group delay	us	Less than 100 measured at RX line						
RX line	mV	Nominal 110, for 60% deviation						
Proc. RX	mV	Nominal 300, deemphasised, squelched						

*Tolerance of response from 400 to 2700 Hz +1, -1.5 dB
**Tolerance of Squelch-level from -25°C to +60°C is ±1.5 dB (SINAD).

TRANSMITTER

TYPE CQM		6332	6333	6334	6112	6113	6114	6774	6662	6663	6664
RF output power	W	6 W ±1 dB or 25 W ±1 dB depending on assembly. Both adjustable down 10 dB from nominal. "Softkeying" with 6 ms rise and fall times. Software controlled -10 dB reduction.									
Duty cycle	%	20% at 60 °C (1 min TX/4 min. RX)									
RF Bandwidth	MHz	Covers total band or band split.									
Modulation response	Hz	300-3000	300-3000	300-2550	300-3000	300-3000	300-2550	300-2550	300-3000	300-3000	300-2550
Mod. resp. Mic. input		+6 dB/oct. phase modulation caracteristics at 6000 Hz att.: >6 dB rel to 1 kHz value.									
Tolerance	dB	+1 -3	+1* -3	+1 -3		+1* -3	+1 -3			+1* -3	+1 -3
Max. deviation	kHz	5	4	2.5	5	4	2.5	2.5	5	4	2.5
Conducted spur.	dBm	-37									
Radiaten spurious	nW	200 (-37 dBm to resonant substition dipole)									
Audio sensitivity	SPL	94 dB rel. 2 x 10 -5 Pascal for 60% -90% of rated deviation corresponding to 110 mV ±3 dB									
Audio distor.	%	5 (CEPT)									
Resident mod.	dB	-40 (Weighted CEPT), -37 (unweighted, DOC)									
Adjacent Channel power	dB/C	-70	N/A	-60	-70		-60		-70		-60
Attack time	ms	15									
Decay time	ms	5									
Group delay	us	Less than 100 measured at TX line									
TX stability		4.5:1 VSWR, all phase angles									
TX line		10 Hz to 3000 Hz, 220 mV RMS for 60% dev.									

*Tolerance of response from 400 to 2700 Hz is +1, -1.5 dB.

TECHNICAL SPECIFICATIONS

CQM6xxx

GENERAL

TYPE CQM		6332	6333	6334	6112	6113	6114	6774	6662	6663	6664
Freq. & Splits	MHz	66-88			136-174			174-210 190-225	403-470		
Channel Spacing	kHz	25	20	12.5	25	20	12.5	12.5	25	20	12.5
Channel raster	kHz	6.25	5	6.25	6.25	5	6.25	6.25	12.5	10	6.25
No. of Channels		Up to 99 with CL6003									
Mode		Simplex or semi duplex									
Channel scan	ms	5 for one channel, 10 for 1 MHz									
Frequency Stability (Extreme)	kHz	±1.35		±1	±2		±1.5		±2.5		±1.5
Temperature range	°C	-25 to +60									
Antenna impedance	Ohm	50									
Speaker	Ohm	4 to 8, balanced (DC power at LS lines)									
Supply	V	13.2 V nominal, 10.8 V to 15.6 V at extreme conditions									
Cur. dr. Off RX (stby) TX (25 W)	mA	Including CF (300 mA) and CL (220 mA) 27 : 17 720 : 720 6520 : 7020									
Dimensions	mm	D = 175 W = 181 H = 51									
Weight	kg	2.2 incl. Control head (.25) and Cassette (.4)									
CTCSS Signalling: In accordance with EIA specification RS-220											

RECEIVER

TYPE CQM		6332	6333	6334	6112	6113	6114	6774	6662	6663	6664
Sensitivity	uV/EMF	0.7		1.0	0.7		1.0	1.15	0.8		1.15
20 dB p-SINAD	dBm	-116		-113	-116		-113	-112	-115		-112
RF Bandwidth	MHz	Varactor tuned to cover total band or band split									
AF output power	W	10 EIA, 8 CEPT method									
Distorsion	%	4 (measured at 4 W)									
Audio freq. bandwith	Hz	300-3000	300-3000	300-2550	300-3000	300-3000	300-2550	300-2550	300-3000	300-3000	300-2550
Audio freq. resp.		-6 dB/oct. phase modulation caracteristics									
Tolerance	dB	+1 -3	+1* -3	+1 -3		+1* -3	+1 -3			+1* -3	+1 -3
Hum & noise	dB	-45 (EIA, unweighted)									
Radiated spurious	nW	2 (-57 dBm to resonant substition dipole)									
Conducted Spurious	dBm	-57									
RX attack time	ms	25 (EIA)									
Recovery time	ms	35									
Adjacent channel selectivity	dB	CEPT 70 2 uV	FTZ 70 rel.	CEPT 60 2 uV	CEPT 70 2 uV	FTZ 70 rel.	CEPT 60 2 uV	CEPT 60 2 uV	CEPT 70 2 uV	FTZ 70 rel.	CEPT 60 2 uV
Blocking	dB/uV	100 (CEPT method)									
Intermodulation	dB	CEPT 76 1 uV	FTZ 66 +80 2 uV	CEPT 70 1 uV	CEPT 76 1 uV	FTZ 66 +80 2 uV	CEPT 70 1 uV	CEPT 70 1 uV	CEPT 76 1 uV	FTZ 66 +80 3 uV	CEPT 70 1 uV
Spurious rejection	dB/uV	76 (CEPT method)									
CO-chan. rejection	dB	8									
Sq.sensitivity	dB	10 - 12 dB SINAD (EIA)**									
Squelch tail	ms	15 (EIA)									
Group delay	us	Less than 100 measured at RX line									
RX line	mV	Nominal 110, for 60% deviation									
Proc. RX	mV	Nominal 300, deemphasised, squelched									

*Tolerance of response from 400 to 2700 Hz +1, -1.5 dB
**Tolerance of Squelch-level from -25°C to +60°C is ±1.5 dB (SINAD).

TRANSMITTER

TYPE CQM		6332	6333	6334	6112	6113	6114	6774	6662	6663	6664
RF output power	W	6 W ±1 dB or 25 W ±1 dB depending on assembly. Both adjustable down 10 dB from nominal. "Softkeying" with 6 ms rise and fall times. Software controlled -10 dB reduction.									
Duty cycle	%	20% at 60 °C (1 min TX/4 min. RX)									
RF Bandwidth	MHz	Covers total band or band split.									
Modulation response	Hz	300-3000	300 3000	300-2550	300-3000	300-3000	300-2550	300-2550	300-3000	300-3000	300-2550
Mod. resp. Nic. input		+6 dB/oct. phase modulation caracteristics at 6000 Hz att.: >6 dB rel to 1 kHz value.									
Tolerance	dB	+1 -3	+1* -3	+1 -3		+1* -3	+1 -3			+1* -3	+1 -3
Max. deviation	kHz	5	4	2.5	5	4	2.5	.2.5	5	4	2.5
Conducted	dBm	-37									
Radiaten spurious	nW	200 (-37 dBm to resonant substition dipole)									
Audio distorsion	SPL	94 dB rel. 2 x 10 -5 Pascal for 60% -90% of rated deviation corresponding to 110 mV ±3 dB									
Audio distor.	%	5 (CEPT)									
Resident mod.	dB	-40 (Weighted CEPT), -37 (unweighted, DOC)									
Adjacent Channel power	dB/C	-70	N/A	-60	-70		-60		-70		-60
Attack time	ms	15									
Decay time	ms	5									
Group delay	us	Less than 100 measured at TX line									
TX stability		4.5:1 VSWR, all phase angles									
TX line		10 Hz to 3000 Hz, 1.0 V RMS for 60% dev.									

*Tolerance of response from 400 to 2700 Hz is +1, -1.5 dB.

RADIO FREQUENCY BOARD RF6xxx

- Block Diagram
- Description

a) RF6110
b) RF633x
c) RF666x
d) RF677x
e) XO6xxx & RA6004/RA6005

RF6xxx

RADIO FREQUENCY BOARD

RECEIVER

RECEIVER FRONT-END

The front-end consist of a 2 resonator input filter, a grounded emitter bipolar transistor RF amplifier Q301, a four resonator intermediate filter, a JFET mixer Q302 and a junction buffer amplifier Q401, which makes a constant load to the mixer and impedance matching to the crystal filter.

The incoming signal from the antenna passes through a low pass filter and the antenna switch before the receiver front-end.
The front-end varactors are tuned by a tracking voltage supplied from U606 and determined by the synthesizer.

The injection signal from the RX VCO is filtered through a 2 resonator varactor tuned filter and mixed with the antenna signal in Q302. The varactors D306/7 are tuned by the tracking voltage. The receiver injection is measured at TP3.

FIRST IF

The first intermediate frequency is 45 MHz.

The first IF passes through a buffer amplifier Q401, a two stage monolithic crystal filter Z401a, b and is fed to a dual gate MOSFET amplifier Q402. The purpose is to overcome the noise figure of the following stages while providing a constant load to the crystal filter with varying signal levels.

SECOND IF AND DEMODULATOR

The output of the oscillator circuit Y401 (45.455 MHz), Q404, L408 and associated components is injected to the second FET mixer Q403.
The mixer is followed by a differential amplifier (Q405-Q406). The selectivity of the 455 kHz amplifier is formed by two ceramic filters (Z402 and 403) located at the input and output of the amplifier. The following IC, U401, works as limiter, quadrature discriminator and line amplifier.

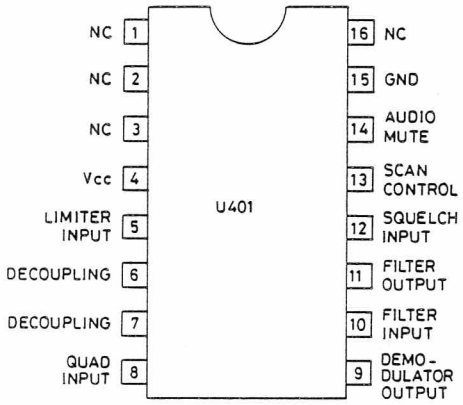

PINNING FOR U401

2nd IF AMPLIFIER D404.391

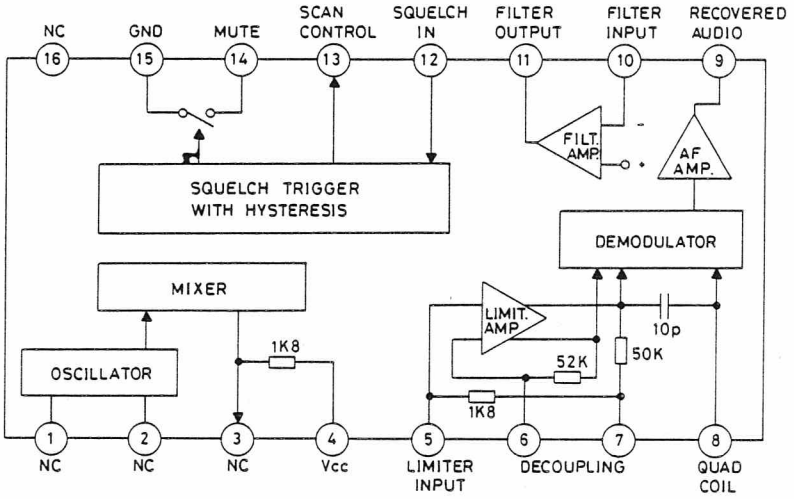

BLOCK DIAGRAM FOR U401

2nd IF AMP. D404.390

SQUELCH

U402 is a squelch unit micromodule. It filters, amplifies and detect the noise of the AF signal

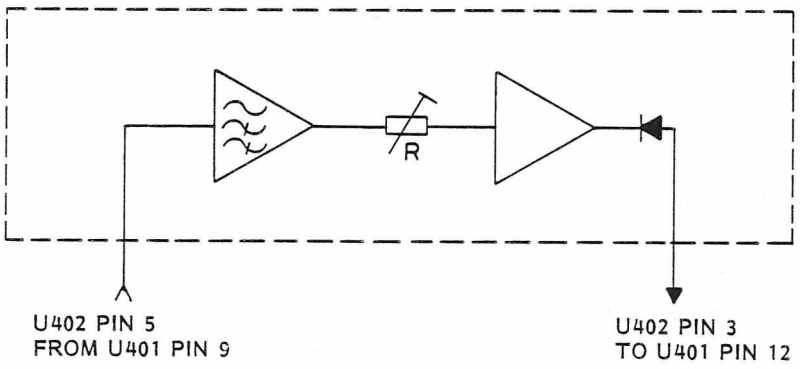

Two amplifiers in a dual low current operational amplifier are used.
The signal from U401 pin 9 passes through an active high-pass filter with cut-off at about 4.5 kHz. The second amplifier stage amplifies the selected noise signal and feeds it to the detector in U401 at pin 12.
The variable resistor sets the gain.
(See electrical drawing later on in this chapter).

SYNTHESIZER CIRCUIT

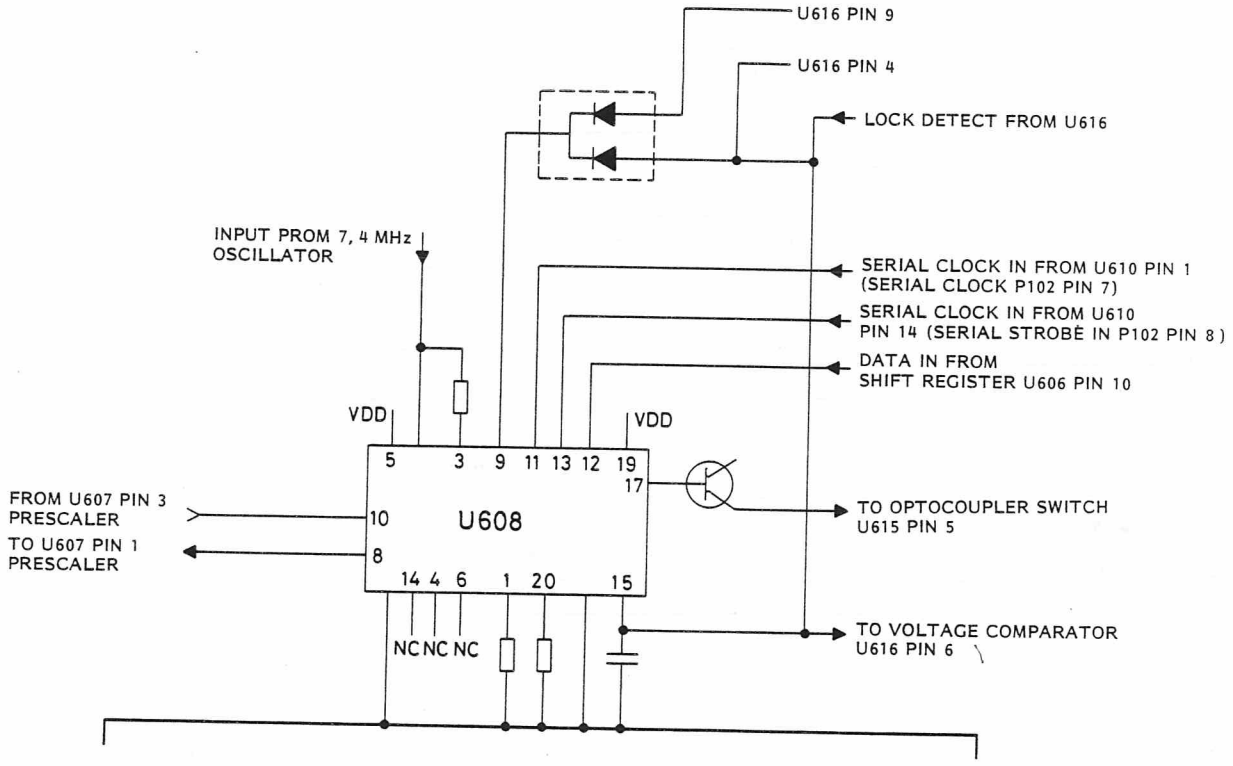

SYNTHESIZER CIRCUIT

The synthesizer chip contains:

Reference divider (by 1 to 16383).
Variable divide by N (N = 1 to 1023).
Variable divide by A (swallow by 1 to 127).
Sample and hold phase detector.
Digital frequency detector.
Out of lock detector.
Dual modulus control.
Serial data loading.
Internal 31 bit latch.

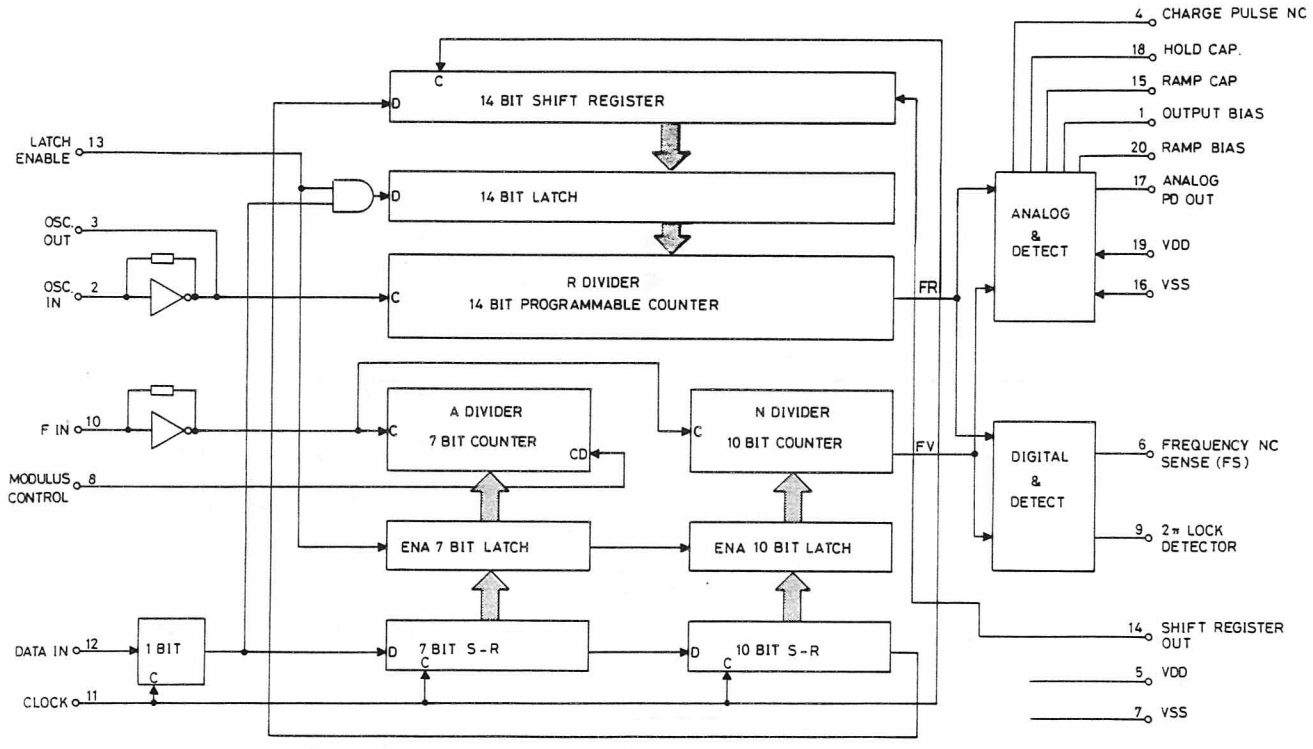

BLOCK DIAGRAM U608

D404.513/2

Two amplifiers in a dual low current operational amplifier are used.
The signal from U401 pin 9 passes through an active high-pass filter with cut-off at about 4.5 kHz. The second amplifier stage amplifies the selected noise signal and feeds it to the detector in U401 at pin 12.
The variable resistor sets the gain.
(See electrical drawing later on in this chapter).

SYNTHESIZER CIRCUIT

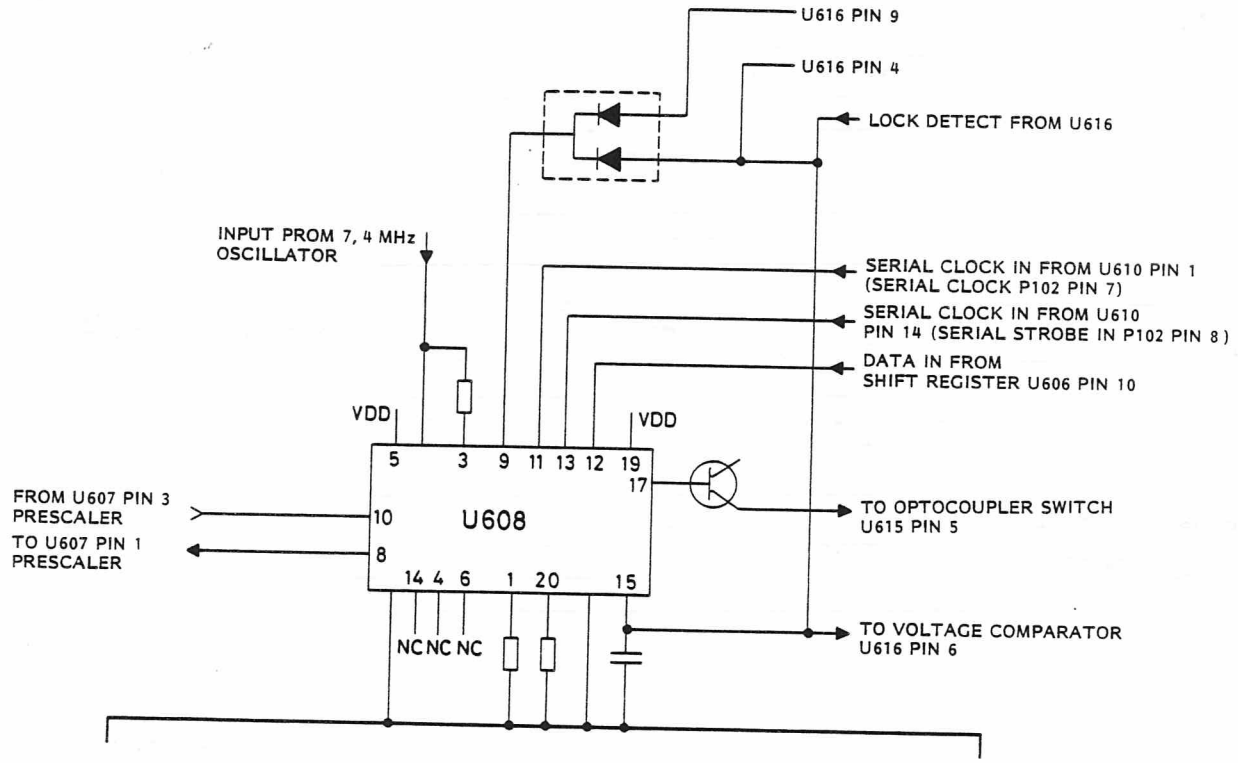

SYNTHESIZER CIRCUIT

The synthesizer chip contains:

Reference divider (by 1 to 16383).
Variable divide by N (N = 1 to 1023).
Variable divide by A (swallow by 1 to 127).
Sample and hold phase detector.
Digital frequency detector.
Out of lock detector.
Dual modulus control.
Serial data loading.
Internal 31 bit latch.

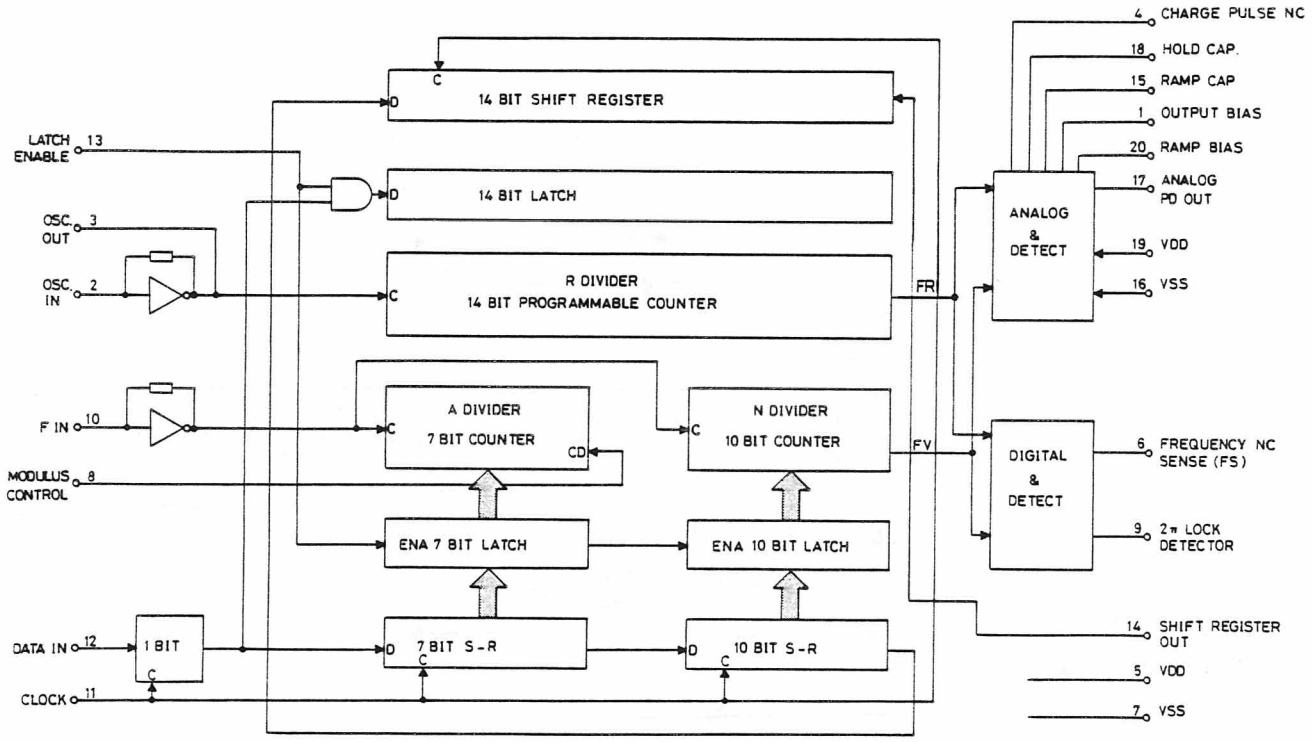

BLOCK DIAGRAM U608

D404.513

1. Data in - pin 12

The Data is presented on the Data input at the time of the positive clock transition. The Data input provides programming information for the 10 bit + N counter, the 7 bit + A counter, the 14 bit + R counter, and the 1 control bit. The N counter and A counter are latched when the control bit is low and the enable line is high. All counters are latched when the control bit is high and the enable line is high.

2. Lock detect - pin 9

Output B Series Drive Capability.

The output will be high during lock and go low to indicate a non-lock condition. The non-lock condition may be nearly a continuous low or pulses to low. The frequency and duration of the non-lock pulses will be the same as either polarity of the freqyency sense output.

3. Modulus control - pin 8

Signal generated by the on chip control logic circuitry for controlling an external dual modulus prescaler. The modulus control level will be low at the beginning of a count cycle and will remain low until the +A counter has counted down from its programmed value. At this time, modulus control goes high and remains high until the +N counter has counted the rest of the way down from its programmed value (N - A additional counts since both +N and +A are counting down during the first portion of the cycle). Modulus control is then set back low, the counters preset to their respective programmed values, and the above sequence repeated. This provides for a total programmable divide value (N_T) = N. P + A where P + 1 and P represent the dual modulus prescaler divide values respectively for low and high modulus control levels; N the number programmed into the +N counter and A the number programmed into the +A counter.

4. F_{in} - pin 10

Input to the positive edge triggers +N and +A counters. F_{in} is derived from the dual modulus prescaler (U602) and is AC coupled.

5. Clock - pin 11

Shift register clock input.

The serial clock comes from the microprocessor U907 on the control logic board CL6002. Each low-to-high transition clocks one bit into the on-chip shift registers. The data is presented on the DATA input at the time of the positive clock transition.

6. Latch enable - pin 13

The enable signal is derived from the serial strobe coming from the microprocessor on the board CL6002. When high ("1") transfers contents of the shift register into the latches, and to the programmable counter inputs. Whe low ("0") inhibits the above action and thus allows changes to be made in the shift register data without affecting the counter programming and switch outputs. An on-chip pull-up establishes a continuously high level forn ENABLE when no external signal is applied.

7. OSC_{out} - pin 3, OSC_{in} - pin 2

OSC_{in} serves as input for the externally-generated reference signal. This signal is AC coupled to OSC_{in}.

8. Ramp cap - pin 15
This is the external connection for the ramp capacity C622 for the sample and hold circuit.

9. Analog PD out (Ramp) - pin 17
In lock, this output delivers DC voltage to the RX VCO.
When out of lock, the ramp voltage passes through the loop filter before being fed into the RX VCO.

The frequency information comes from the CL6002 via the internal serial bus, and is loaded into the latches as a 32 bit block. This data sets up the counter ratios for generating the right output frequency. The phase detector compares the divided frequencies and controls the VCO through an external charge pump and the loop filter.

The frequency synthesizer supplies excitation for the transmitter an local oscillator injection for the receiver mixer.

The synthesizer output covers: The frequency ranges 66.00 to 470.00 MHz.

Receiver first if frequency:

UNIT	DOUBLER	IF (MHz)
RF633x	NO	21.4
RF611x	NO	45
RF6774L	NO	45
RF6774H	NO	45
RF666x	YES	45

The synthesizer output frequency is selected by the serial 40 bit information coming from the CF6xxx board.
Only 32 bits of this telegram is the actual frequency information for the synthesizer. The other bits are used for tuning/tracking voltage generation, RX/TX etc..
(See the curves in adjustment chapter)

Frequency stability is determined by a single crystal controlled reference oscillator operating at 7.4. MHz. (If selfquieting see further in this chapter).
The reference oscillator in RF666x is a separate temperature compensated module (XO6000) while in the other bands it is mounted on the RF printed circuit board.
All reference oscillator (except in RF633x) are equipped with a compromise temperature compensation network consisting of R702, R705, R701, R703, R704, R706.
Synthesizer circuitry in RF6000 employs different reference frequencies and prescaler divide ratios as shown below:

	Ch spacing MHz	CH raster MHz	Phase ref. frequency MHz	Prescaler (P)
RF6332	0.025	0.00625	0.00625	40
RF6333	0.020	0.005	0.005	40
RF6334	0.0125	0.00625	0.00625	40
RF6112	0.025	0.00625	0.00625	64
RF6113	0.020	0.005	0.005	64
RF6114	0.0125	0.00625	0.00625	64
RF6774L	0.0125	0.00625	0.00625	128
RF6774H	0.0125	0.00625	0.00625	128
RF6662	0.025	0.0125	0.00625	64
RF6663	0.020	0.01	0.005	64
RF6664	0.0125	0.00625	0.003125	128

Reference x-tal, standard is 7.4.MHz, but if you want to receive 66.6, 74.0, 81.4, 140.6, 148.0, 155.4, 162.8 or 170.2MHz use 7.375MHz x-tal.

PHASE LOCKED LOOP

The digitaly stabilized synthesizer loop consists of a voltage controlled oscillator, a dual modulus prescaler operating at the desired channel raster (except RF6663 which is 1/2 channel raster and RF6664 1/4 channel raster), a phase detector, a low pass filter and a combined out-of-lock detector, speed-up circuitry.
VCO's are separate for receiver (Q601) and transmitter (Q501) and designed around grounded gate FET's.
The receiver VCO is buffered by Q602, Q603 for injection and by Q602, Q604 for prescaler.
Similarly the transmitter VCO is buffered by Q502 for injection and by Q502, Q604 for prescaler.
The VCO signal is then applied to the dual modulus prescaler (U607) and variable ratio divider (part of U608) where frequency is divided.

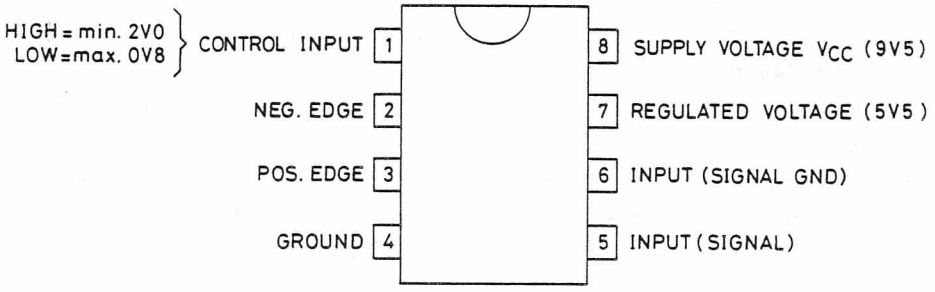

PINNING U607

Frequency and phase discriminator is a "sample and hold "type where C629 is the sample and C628 is the ramp capacitor.
The tuning voltage is generated by sampling the ramp by an internal constant current generator and C628 at time intervals determined by the variable divider.
The Ramp is timed by the reference divider and it's slope which gives the phase. The detector gain is tailored by resistors R628 and R629.
The reference divider is also part of the U608.
The output of the phase dedector (U608 pin 17) is applied to the emitter follower (Q605) and to the tuning voltage level converter (U609B).
The level converter converts the tuning range of U608, from 1V to 6V to a greater range, from 4V to 20V. This large tuning voltage is required in order to couple relatively low Q varactors lightly to the high Q tuned circuits.

The actual loop filter consist of R638, R639, R608 C642, C640 and C165.

U616 quad comparator, U615 dual optocoupler and U609A are part of the out-of-lock and speed up circuitry.

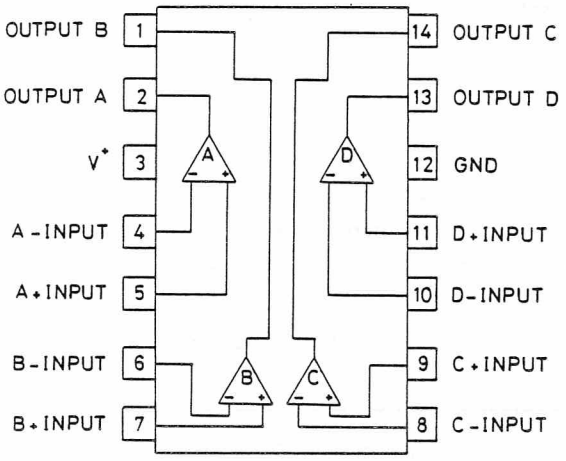

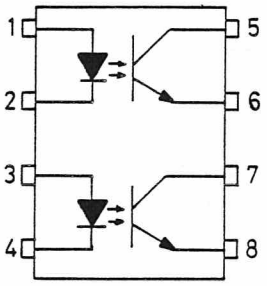

ANODE : PIN 1, 3
CATHODE : PIN 2, 4
EMITTER : PIN 5, 7
COLLECTOR : PIN 6, 8

PINNING U610/616 + U615

Out-of-lock circuit receives input from:

1- Synthesizer out-of-lock pin (608 pin 11)
2- Serial enable (via P102 pin 8, U610, D610, R673)
3- Ramp voltage (U608 pin 15)

and generates lock signal (U616 pin 13, connected to P102 pin 9) and speed up signal (connected to U609a pin 3).
The lock signal generated by this circuitry is used by CF6001 to turn down the transmitter in case the synthesizer is out of lock.
Speed up signal is used in order to "open" synthesizer, closed loop bandwith and synchronize reference ramp so that frequency can be changed relatively fast.
The normal closed loop bandwith is aprox. 30 Hz, while in "open" condition is around 600 Hz.
The loop bandwith is "opened" by short circuiting R638 and R639 loop resistors by aid of the U615 optocoupler.

The ramp synchronization is obtained by short circuiting the U608 pin 2 to ground during the "HIGH"ramp condition so that the 7.4 MHz reference oscillator is not applied to the synthesizer IC and periodic ramp generation is temporaryly stopped until synthesizer is near to lock.
Two different parts of the U606 shift register is used as serial to parallel converter.

Clock	Output Enable	Strobe	Data	Parallel Outputs		Serial Outputs	
				Q1	Q_N	Q_S	Q'_S
⌐	0	X	X	3S	3S	Q7	No Chg.
¬	0	X	X	3S	3S	No Chg.	Q7
⌐	1	0	X	No Chg.	No Chg.	Q7	No Chg.
⌐	1	1	0	0	Q_N - 1	Q7	No Chg.
⌐	1	1	1	1	Q_N - 1	Q7	No Chg.
¬	1	1	1	No Chg.	No Chg.	No Chg.	Q7

3S = Thre-State
X = Don't Care
At the positive clock edge, information in the 7th shift register stage is transferred to Q8 and Q_S.

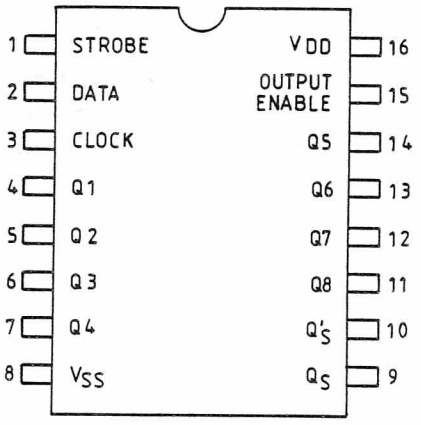

TRUTH TABLE AND PINNING U606

U606 pin 4, 5, 6, 7 are used for VCO control, tracking and modulation compensation networks. The frequency band information is presented at this pins by the last four bits of the telegram.
U606 pin 11, 12, 13 is used for power-up, reduced power and RX/TX respectively.

TRANSMITTER

The transmitter stage consists of an exciter, a power amplifier and a power controller circuit.

EXCITER

The exciter amplifies the TX-VCO output from +3 dBm to about +27 dBm. It is made by three wideband amplifier stages (Q100, Q101, Q102), which covers the whole band.
The exciter output is measured between TP10 and TP11.

POWER AMPLIFIER

The PA is made as a three stage amplifier (Q103, Q104, Q105) with a nominal output power level of 22 Watt. It is connected to the duplex filter antenna switch through a lowpass filter.
The DC collector supply on the first stage can be regulated by the power controller circuit and thereby the output power can be reduced by 10 and 20 dB.

POWER CONTROLLER CIRCUIT

There is incorporated a directional coupler for minimizing the influence on output power level caused by changes in PA output VSWR. A small part of the RF output power signal is detected and used as reference for a DC amplifier. The output of this amplifier Q108 is used for regulating the first stage of the PA. This keeps the output power constant against variations in supply voltage and temperature. The circuit includes a temperature sensor (PTC). This PTC circuit will turn down the output power by approx. 3 dB if the internal temperature is higher than 85-90°C.

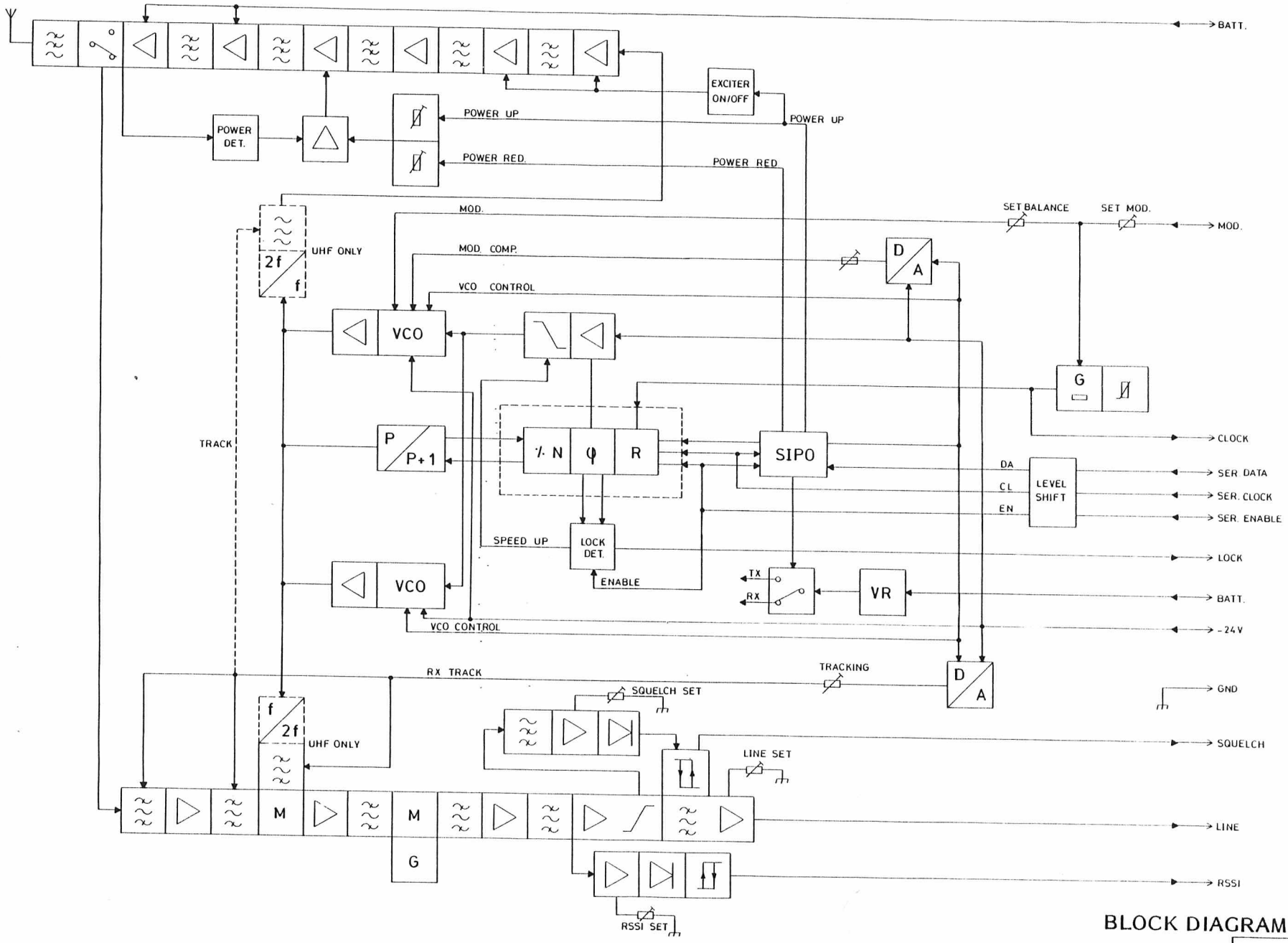

BLOCK DIAGRAM RF6xxx

D404.048/3

REGULATOR CIRCUITS

VOLTAGE REGULATORS

There are three different voltages on the RF-board:

8.5 Volt connector is measured at TP13
8.5 Volt TX is measured at TP11
8.5 Volt RX

8.5 Volt:
This voltage is made by a regulator IC (U201) and is used for all the receiver circuits and the interface all circuits but TX and RX.

8.5 Volt TX:
This voltage is used in TX-VCO.

8.5 Volt RX:
This voltage is used in RX-VCO.

SERIAL INTERFACE

This circuit consists of quad comperators (U610) and an 8 bit shift and parts of store register (U606).
The three comparators are used as level shifters from 5 V to 8.5 V for the inputs:

- Serial clock
- Serial data
- Strobe

The comparators are coupled with hysteresis for max. noise immunity. The parallel outputs from the shift register are used to control:

- 3 power levels
- TX ON/OFF
- Synthesizer enable.

The serial out goes to the synthesizer chip for loading frequency information.

CHAPTER 3a

RF611x

RADIO FREQUENCY BOARD RF611x

- Electrical diagram
- Component lay out
- Part list

Storno

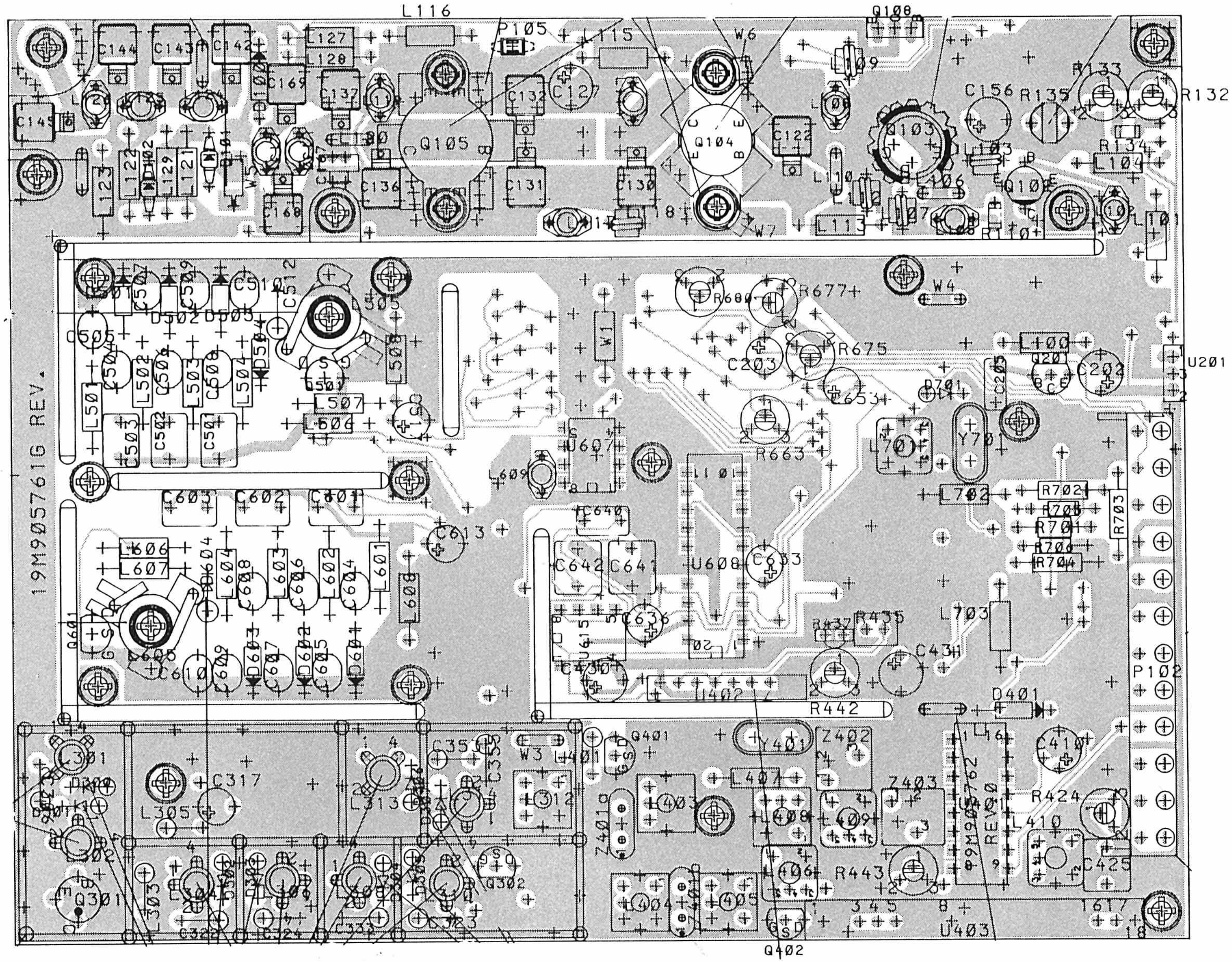

RADIO FREQUENCY UNIT RF6110

COMPONENT LAYOUT-COMPONENT SIDE

D404.252

PARTS LIST FOR RADIO FREQUENCY BOARD RF611X : M905761GX BD. REV.2/P

Pos	Code No.	Description	Qt
		COMPONENTS REVISED SINCE LAST EDITION ARE MARKED ✱	
----	----------	----------	---
	M905761G1	RF6112S25 CH. SPAC. 25kHz/25W OUT	
	M905761G2	RF6113S25 CH. SPAC. 20kHz/25W OUT	
	M905761G3	RF6114S25 CH. SPAC. 12.5kHz/25W OUT	
	M905761G4	RF6112S6 CH. SPAC. 25kHz/6W OUT	
	M905761G5	RF6113S6 CH. SPAC. 20kHz/6W OUT	
	M905761G6	RF6114S6 CH. SPAC. 12.5kHz/6W OUT	
----	----------	----------	---
C000	2113741A33	CAP CER CL2 3N3 10%	1
C001	J707809P5	CAP CER NPO 2P2 .25P G1	1
C100	J707809P10	CAP CER NPO 5P6 .25P	1
C101	2113741A17	CAP CER CL2 680P 10%	1
C102	J707809P8	CAP CER NPO 3P9 .25P	1
C103	J707809P27	CAP CER NPO 150P 5%	1
C104	J707809P19	CAP CER NPO 33P 5%	1
C105	J707809P13	CAP CER NPO 10P 5%	1
C106	2113741M45	CAP CER CL2 10N 10%	1
C107	J707809P25	CAP CER NPO 100P 5%	1
C108	J707809P22	CAP CER NPO 56P 5%	1
C109	J707809P17	CAP CER NPO 22P 5%	1
C110	2113741M45	CAP CER CL2 10N 10%	1
C111	J707809P25	CAP CER NPO 100P 5%	1
C112	2113741A17	CAP CER CL2 680P 10%	1
C113	J707809P21	CAP CER NPO 47P 5%	1
C114	J707809P25	CAP CER NPO 100P 5%	1
C115	J707809P24	CAP CER NPO 82P 5%	1
C116	2113741M45	CAP CER CL2 10N 10%	1
C117	J707809P26	CAP CER NPO 120P 5%	1
C118	2113741M45	CAP CER CL2 10N 10%	1
C119	2113741A17	CAP CER CL2 680P 10%	1
C120	J707809P23	CAP CER NPO 68P 5%	1
C121	J707809P23	CAP CER NPO 68P 5%	1
C122	A700006P34	CAP MICA 100P 5%	1
C123	2113741M45	CAP CER CL2 10N 10%	1
C124	J707809P26	CAP CER NPO 120P 5%	1
C125	2113741A17	CAP CER CL2 680P 10%	1
C126	2113741M45	CAP CER CL2 10N 10%	1
C127	J707353P6	CAP ELECT 4U7 25V	1
C128	J707809P27	CAP CER NPO 150P 5%	1
C129	J707809P27	CAP CER NPO 150P 5%	1
C130	A700006P32	CAP MICA 82P 5% G1/G2/G3	1
C130	A700006P30	CAP MICA 68P 5% G4/G5/G6	1
C131	A700006P41	CAP MICA 180P 5% G1/G2/G3	1

Pos	Code No.	Description	Qt
C131	A700006P32	CAP MICA 82P 5% G4/G5/G6	1
C132	A700006P41	CAP MICA 180P 5% G1/G2/G3	1
C133	2113741C17	CAP CER CL2 100N 10% G1/G2/G3	1
C134	J707809P26	CAP CER NPO 120P 5% G1/G2/G3	1
C135	2113741A17	CAP CER CL2 680P 10%	1
C136	A700006P26	CAP MICA 47P 5% G1/G2/G3	1
C137	A700006P34	CAP MICA 100P 5% G1/G2/G3	1
C138	J707809P27	CAP CER NPO 150P 5%	1
C139	J707809P27	CAP CER NPO 150P 5%	1
C140	J707809P27	CAP CER NPO 150P 5%	1
C141	J707809P27	CAP CER NPO 150P 5%	1
C142	A700006P6	CAP MICA 10P 5%	1
C143	A700006P22	CAP MICA 36P 5%	1
C144	A700006P22	CAP MICA 36P 5%	1
C145	A700006P11	CAP MICA 15P 5%	1
C146	2113741A17	CAP CER CL2 680P 10%	1
C147	2113741A17	CAP CER CL2 680P 10%	1
C148	2113741A17	CAP CER CL2 680P 10%	1
C149	2113741A17	CAP CER CL2 680P 10%	1
C150	J707809P1	CAP CER NPO 1P0 .25P	1
C151	J707809P1	CAP CER NPO 1P0 .25P	1
C152	2113741A17	CAP CER CL2 680P 10%	1
C153	2113741A17	CAP CER CL2 680P 10%	1
C154	2113741A17	CAP CER CL2 680P 10%	1
C155	2113741A17	CAP CER CL2 680P 10%	1
C156	J707353P3	CAP ELECT 0U47 50V	1
C157	2113741A17	CAP CER CL2 680P 10%	1
C158	2113741A17	CAP CER CL2 680P 10%	1
C159	2113741M45	CAP CER CL2 10N 10%	1
C160	2113741A17	CAP CER CL2 680P 10%	1
C161	2113741M45	CAP CER CL2 10N 10%	1
C162	2113741M45	CAP CER CL2 10N 10%	1
C163	2113741C05	CAP CER CL2 33N 10%	1
C164	2113741A17	CAP CER CL2 680P 10%	1
C165	2113741A17	CAP CER CL2 680P 10%	1
C166	2113741A17	CAP CER CL2 680P 10%	1
C167	A701413P34	CAP MICA 100P 5% G1/G2/G3	1
C167	A701413P38	CAP MICA 150P 5% G4/G5/G6	1
C168	A700006P28	CAP MICA 56P 5% G1/G2/G3	1
C168	A700006P32	CAP MICA 82P 5% G4/G5/G6	1
C169	A700006P9	CAP MICA 13P 5% G1/G2/G3	1
C169	A700006P22	CAP MICA 36P 5% G4/G5/G6	1
C170	J707809P8	CAP CER NPO 3P9 .25P G1/G2/G3	1
C170	J707809P13	CAP CER NPO 10P 5% G4/G5/G6	1
C172	2113741M45	CAP CER CL2 10N 10%	1

PARTS LIST FOR RADIO FREQUENCY BOARD RF611X : M905761GX BD. REV.2/P

Pos	Code No.	Description	Qt
C173	2113740A71	CAP CER NP0 470P 5%	1
C174	2113741A33	CAP CER CL2 3N3 10%	1
C175	2113741M21	CAP CER CL2 1N 10%	1
C176	2113741M45	CAP CER CL2 10N 10%	1
C177	2113740B73	CAP CER NP0 1N0 5% ¤	1
C178	2113740B73	CAP CER NP0 1N0 5% ¤	1
C201	2113741C17	CAP CER CL2 100N 10%	1
C202	J707444P8	CAP TA SOL 22U 16V	1
C203	J707444P6	CAP TA SOL 4U7 35V	1
C204	2113740A71	CAP CER NP0 470P 5%	1
C205	J707412P9	CAP PYES 100N 10%	1
C301	2113740A07	CAP CER NP0 1P5 .25P	1
C302	2113741M21	CAP CER CL2 1N 10%	1
C304	2113740A13	CAP CER NP0 2P7 .25P	1
C305	2113740A33	CAP CER NP0 15P 5%	1
C306	J707483P1	CAP PHEN 0P47 5%	1
C307	2113741M21	CAP CER CL2 1N 10% G1/G2/G3	1
C307	2113741A17	CAP CER CL2 680P 10% G4/G5/G6	1
C309	2113740A33	CAP CER NP0 15P 5%	1
C310	2113741M21	CAP CER CL2 1N 10%	1
C311	2113741M21	CAP CER CL2 1N 10%	1
C312	2113740C19	CAP CER NP0 1N2 5%	1
C314	2113740A11	CAP CER NP0 2P2 .25P	1
C315	2113741M21	CAP CER CL2 1N 10%	1
C316	2113740A11	CAP CER NP0 2P2 .25P	1
C317	J707444P2	CAP TA SOL 0U22 35V	1
C318	2113741M21	CAP CER CL2 1N 10%	1
C319	2113740A33	CAP CER NP0 15P 5%	1
C320	2113741M21	CAP CER CL2 1N 10%	1
C322	J707483P7	CAP PHEN 1P00 5%	1
C323	J707483P5	CAP PHEN 0P68 5%	1
C324	J707483P4	CAP PHEN 0P56 5%	1
C325	2113741M21	CAP CER CL2 1N 10%	1
C326	2113740A33	CAP CER NP0 15P 5%	1
C328	2113740A33	CAP CER NP0 15P 5%	1
C331	2113740A33	CAP CER NP0 15P 5%	1
C332	2113740A33	CAP CER NP0 15P 5%	1
C333	J707483P13	CAP PHEN 0P22 10%	1
C335	2113741M21	CAP CER CL2 1N 10%	1
C338	2113740A24	CAP CER NP0 6P8 .25P	1
C339	2113741M21	CAP CER CL2 1N 10%	1
C340	2113741A33	CAP CER CL2 3N3 10%	1
C345	2113740A41	CAP CER NP0 33P 5%	1
C347	2113741M21	CAP CER CL2 1N 10%	1
C348	2113741M21	CAP CER CL2 1N 10%	1
C350	2113740A07	CAP CER NP0 1P5 .25P	1
C351	2113740A29	CAP CER NP0 10P 5%	1
C353	J707483P2	CAP PHEN 0P33 5%	1
C354	2113740A29	CAP CER NP0 10P 5%	1
C355	J707483P8	CAP PHEN 1P20 5%	1
C356	2113741M21	CAP CER CL2 1N 10%	1
C357	2113740A03	CAP CER NP0 1P0 .25P	1
C358	2113740A03	CAP CER NP0 1P0 .25P	1
C359	2113740A03	CAP CER NP0 1P0 .25P	1
C401	2113741A33	CAP CER CL2 3N3 10%	1
C402	2113741A33	CAP CER CL2 3N3 10%	1
C403	2113741A33	CAP CER CL2 3N3 10%	1
C404	2113740A19	CAP CER NP0 4P7 .25P	1
C405	2113741C17	CAP CER CL2 100N 10%	1
C406	2113740A21	CAP CER NP0 5P6 .25P	1
C407	2113740A19	CAP CER NP0 4P7 .25P	1
C408	2113741M21	CAP CER CL2 1N 10%	1
C409	2113741A33	CAP CER CL2 3N3 10%	1
C410	J707444P8	CAP TA SOL 22U 16V	1
C411	2113741C17	CAP CER CL2 100N 10%	1
C412	2113741C17	CAP CER CL2 100N 10%	1
C413	2113740A33	CAP CER NP0 15P 5%	1
C414	2113741A33	CAP CER CL2 3N3 10%	1
C415	2113741A33	CAP CER CL2 3N3 10%	1
C416	J708702P16	CAP CER N750 18P 5%	1
C417	2113740A49	CAP CER NP0 56P 5%	1
C418	2113741M45	CAP CER CL2 10N 10%	1
C419	2113741C17	CAP CER CL2 100N 10%	1
C420	2113741M45	CAP CER CL2 10N 10%	1
C421	2113741C17	CAP CER CL2 100N 10%	1
C422	2113741C17	CAP CER CL2 100N 10%	1
C423	2113740A29	CAP CER NP0 10P 5%	1
C424	2113741A33	CAP CER CL2 3N3 10%	1
C425	J707412P13	CAP PYES 270N 10% G3/G6 ¤	1
C425	J707444P5	CAP TA SOL 2U2 35V G1/2/4/5 ¤	1
C426	2113740C25	CAP CER NP0 2N2 5% G3/G6 ¤	1
C426	2113740B59	CAP CER NP0 270P 5% G1/2/4/5 ¤	1
C427	2113740A67	CAP CER NP0 330P 5% G3/G6 ¤	1
C428	2113740A57	CAP CER NP0 120P 5% G1/2/4/5 ¤	1
C428	2113740A63	CAP CER NP0 220P 5% G3/G6 ¤	1
C429	2113741M45	CAP CER CL2 10N 10%	1
C430	J707444P8	CAP TA SOL 22U 16V	1
C431	J707444P8	CAP TA SOL 22U 16V	1
C432	2113741C17	CAP CER CL2 100N 10%	1
C433	2113741C17	CAP CER CL2 100N 10%	1
C434	2113741A33	CAP CER CL2 3N3 10%	1
C435	2113740A03	CAP CER NP0 1P0 .25P	1
C436	2113741C17	CAP CER CL2 100N 10%	1
C501	J707412P11	CAP PYES 220N 10%	1
C502	J707412P11	CAP PYES 220N 10%	1
C503	J707412P11	CAP PYES 220N 10%	1
C504	A700235P7	CAP CER N150 3P3 .25P	1
C505	A700235P4	CAP CER N150 1P8 .25P	1
C506	A700235P12	CAP CER N150 8P2 .25P	1
C507	A700235P14	CAP CER N150 12P 5%	1
C508	A700235P32	CAP CER N150 11P 5%	1
C509	A700235P10	CAP CER N150 5P6 .25P	1
C510	A700235P16	CAP CER N150 18P 5%	1
C512	A700235P3	CAP CER N150 1P5 .25P	1
C513	2113741M13	CAP CER CL2 470P 10%	1
C515	2113740A27	CAP CER NP0 8P2 .25P	1
C516	2113740A24	CAP CER NP0 6P8 .25P	1
C517	J707444P6	CAP TA SOL 4U7 35V	1
C518	2113740A07	CAP CER NP0 1P5 .25P	1
C519	2113741M13	CAP CER CL2 470P 10%	1
C520	2113740A11	CAP CER NP0 2P2 .25P	1
C521	2113740A31	CAP CER NP0 12P 5%	1
C522	2113741M13	CAP CER CL2 470P 10%	1
C523	2113740A11	CAP CER NP0 2P2 .25P	1
C524	2113741M13	CAP CER CL2 470P 10%	1
C525	2113741M13	CAP CER CL2 470P 10%	1

PARTS LIST FOR RADIO FREQUENCY BOARD RF611X : M905761GX BD. REV.2/P

Pos	Code No.	Description	Qt
C526	2113741M13	CAP CER CL2 470P 10%	1
C527	2113741M13	CAP CER CL2 470P 10%	1
C528	2113741M13	CAP CER CL2 470P 10%	1
C540	2113741M13	CAP CER CL2 470P 10%	1
C541	2113741M13	CAP CER CL2 470P 10%	1
C542	2113741M13	CAP CER CL2 470P 10%	1
C543	2113741M13	CAP CER CL2 470P 10%	1
C544	2113741M13	CAP CER CL2 470P 10%	1
C545	2113741M13	CAP CER CL2 470P 10%	1
C601	J707412P11	CAP PYES 220N 10%	1
C602	J707412P11	CAP PYES 220N 10%	1
C603	J707412P11	CAP PYES 220N 10%	1
C604	A700235P5	CAP CER N150 2P2 .25P	1
C605	A700235P5	CAP CER N150 2P2 .25P	1
C606	A700235P8	CAP CER N150 3P9 .25P	1
C607	A700235P10	CAP CER N150 5P6 .25P	1
C608	A700235P11	CAP CER N150 6P8 .25P	1
C609	A700235P36	CAP CER N150 7P5 .25P	1
C610	A700235P12	CAP CER N150 8P2 .25P	1
C611	2113740A15	CAP CER NPO 3P3 .25P	1
C612	2113740A19	CAP CER NPO 4P7 .25P	1
C613	J707444P6	CAP TA SOL 4U7 35V	1
C614	2113740A03	CAP CER NPO 1P0 .25P	1
C615	2113740A71	CAP CER NPO 470P 5%	1
C616	2113741M13	CAP CER CL2 470P 10%	1
C617	2113740A03	CAP CER NPO 1P0 .25P	1
C618	2113740A21	CAP CER NPO 5P6 .25P	1
C619	2113741M13	CAP CER CL2 470P 10%	1
C620	2113740A11	CAP CER NPO 2P2 .25P	1
C621	2113741M13	CAP CER CL2 470P 10%	1
C624	2113740A63	CAP CER NPO 220P 5%	1
C625	2113741C17	CAP CER CL2 100N 10%	1
C626	2113741M21	CAP CER CL2 1N 10%	1
C627	2113741M45	CAP CER CL2 10N 10%	1
C628	2113740C25	CAP CER NPO 2N2 5%	1
C629	2113740A59	CAP CER NPO 150P 5%	1
C630	2113740A63	CAP CER NPO 220P 5%	1
C631	2113740A63	CAP CER NPO 220P 5%	1
C632	2113741C17	CAP CER CL2 100N 10%	1
C633	J707444P17	CAP TA SOL 47U 10V	1
C634	2113741C17	CAP CER CL2 100N 10%	1
C635	2113741M13	CAP CER CL2 470P 10%	1
C636	J707444P17	CAP TA SOL 47U 10V	1
C637	2113741C17	CAP CER CL2 100N 10%	1
C639	2113741A33	CAP CER CL2 3N3 10%	1
C640	J707412P9	CAP PYES 100N 10%	1
C641	J707412P13	CAP PYES 470N 10%	1
C642	J707412P13	CAP PYES 470N 10%	1
C643	2113741C09	CAP CER CL2 47N 10%	1
C644	J707436P6	CAP CER NPO 2P7 .25P	1
C652	2113741M21	CAP CER CL2 1N 10%	1
C653	J707444P6	CAP TA SOL 4U7 35V	1
C656	2113740A71	CAP CER NPO 470P 5%	1
C657	2113741M13	CAP CER CL2 470P 10%	1
C659	2113741M21	CAP CER CL2 1N 10%	1
C660	2113741A41	CAP CER CL2 6N8 5%	1
C665	2113741M13	CAP CER CL2 470P 10%	1
C666	2113741M13	CAP CER CL2 470P 10%	1
C667	2113741M13	CAP CER CL2 470P 10%	1
C668	2113740A55	CAP CER NPO 100P 5%	1
C701	2113740A37	CAP CER NPO 22P 5%	1
C702	J708702P22	CAP CER N750 56P 5%	1
C703	2113740A63	CAP CER NPO 220P 5%	1
C704	2113740A27	CAP CER NPO 8P2 .25P	1
C705	2113741M21	CAP CER CL2 1N 10%	1
C706	2113741M45	CAP CER CL2 10N 10%	1
C707	2113740A21	CAP CER NPO 5P6 .25P	1
C708	2113741M45	CAP CER CL2 10N 10%	1
C709	2113741M45	CAP CER CL2 10N 10%	1
D100	A700047P3	DIO SI SIG 1N6263	1
D101	J706892P1	DIO SI PIN UM 9401	1
D102	J706892P1	DIO SI PIN UM 9401	1
D103	J707390P1	DIO SI SIG BAV 74	1
D300	J707928P2	DIO SI CAP BB 809	1
D301	J707928P2	DIO SI CAP BB 809	1
D302	J707928P2	DIO SI CAP BB 809	1
D303	J707928P2	DIO SI CAP BB 809	1
D304	J707928P2	DIO SI CAP BB 809	1
D305	J707928P2	DIO SI CAP BB 809	1
D306	J707928P2	DIO SI CAP BB 809	1
D307	J707928P2	DIO SI CAP BB 809	1
D401	A700025P8	DIO SI ZENR 6V8 5% 0.4W	1
D501	J706007P1	DIO SI CAP BB 505B	1
D502	J706007P1	DIO SI CAP BB 505B	1
D503	J706007P1	DIO SI CAP BB 505B	1
D504	J707928P2	DIO SI CAP BB 809	1
D505	J707769P1	DIO SI CAP BBY 31	1
D601	J706007P1	DIO SI CAP BB 505B	1
D602	J706007P1	DIO SI CAP BB 505B	1
D603	J706007P1	DIO SI CAP BB 505B	1
D604	J706007P1	DIO SI CAP BB 505B	1
D605	J707389P1	DIO SI SIG BAV 99	1
D606	J708681P1	DIO SI SIG BAW 56	1
D607	J707390P1	DIO SI SIG BAV 74	1
D608	J707390P1	DIO SI SIG BAV 74	1
D610	J708681P1	DIO SI SIG BAW 56	1
D701	J707928P2	DIO SI CAP BB 809	1
D702	J707390P1	DIO SI SIG BAV 74	1
L100	A700024P1	COIL RF FIX 0.1UH 10%	1
L101	A700024P1	COIL RF FIX 0.1UH 10%	1
L102	K805653G7	COIL ASM 5 1/2T	1
L103	J707339G1	COIL FIX ASM	1
L104	A700024P1	COIL RF FIX 0.1UH 10%	1
L105	K805653G1	COIL ASM 1 1/2T	1
L106	J707256P2	COIL FIX	1
L107	J707339G1	COIL FIX ASM	1
L108	K805653G2	COIL ASM 2 1/2T G2/G2/G3	1
L108	K805653G6	COIL ASM 6 1/2T G4/G5/G6	1
L109	J707339G1	COIL FIX ASM	1
L110	J707256P1	COIL FIX G1/G2/G3	1
L110	J707256P2	COIL FIX G4/G5/G6	1
L112	J707339G1	COIL FIX ASM	1
L113	A700024P13	COIL RF FIX 1.0UH 10%	1
L114	K805653G2	COIL ASM 2 1/2T G1/G2/G3	1
L114	K805653G4	COIL ASM 4 1/2T G4/G5/G6	1
L115	J709287P1	CORE TOR FERR	1
L116	J709287P1	CORE TOR FERR G1/G2/G3	1
L117	K805653G4	COIL ASM 4 1/2T G1/G2/G3	1

PARTS LIST FOR RADIO FREQUENCY BOARD RF611X : M905761GX BD. REV.2/P

Pos	Code No.	Description	Qt
L118	J707339G1	COIL FIX ASM G1/G2/G3	1
L119	J709603P2	COIL G1/G2/G3	1
L120	J707256P2	COIL FIX G1/G2/G3	1
L120	J707256P1	COIL FIX G4/G5/G6	1
L121	A700024P13	COIL RF FIX 1.0UH 10%	1
L122	A700024P25	COIL RF FIX 10UH 10%	1
L123	A700024P14	COIL RF FIX 1.2UH 10%	1
L124	K805653G5	COIL ASM 5 1/2T	1
L125	K805653G6	COIL ASM 6 1/2T	1
L126	K805653G5	COIL ASM 5 1/2T	1
L127	A700024P25	COIL RF FIX 10UH 10%	1
L128	A700024P25	COIL RF FIX 10UH 10%	1
L129	A700024P13	COIL RF FIX 1.0UH 10%	1
L130	K805653G2	COIL ASM 2 1/2T G1/G2/G3	1
L130	K805653G1	COIL ASM 1 1/2T G4/G5/G6	1
L131	K805653G3	COIL ASM 3 1/2T G1/G2/G3	1
L131	K805653G2	COIL ASM 2 1/2T G4/G5/G6	1
L301	J709099P13	COIL RF VAR 4-1/2T TAP	1
L302	J709099P13	COIL RF VAR 4-1/2T TAP	1
L303	J707486P6	COIL RF FIX 0.47UH 10%	1
L304	J709099P2	COIL RF VAR 4-1/2T TAP	1
L305	J707486P2	COIL RF FIX 3.3UH 10%	1
L306	J709099P7	COIL RF VAR 4-1/2T TAP	1
L308	J709099P6	COIL RF VAR 4-1/2T TAP	1
L310	J709099P2	COIL RF VAR 4-1/2T TAP	1
L312	J708428P2	COIL RF VAR 45 MHZ	1
L313	J709099P4	COIL RF VAR 3-1/2T TAP	1
L314	J709099P3	COIL RF VAR 3-1/2T TAP	1
L401	J707486P10	COIL RF FIX 1.5UH 10%	1
L403	K805570G2	COIL ASM	1
L404	K805570G1	COIL ASM	1
L405	J708428P1	COIL RF VAR 45 MHz	1
L406	K805570G3	COIL ASM	1
L407	A700024P25	COIL RF FIX 10UH 10%	1
L408	J708428P2	COIL RF VAR 45 MHz	1
L409	J707431P1	COIL RF VAR 455KHz 25%	1
L410	J707431P1	COIL RF VAR 455KHz 25%	1
L501	A700024P13	COIL RF FIX 1.0UH 10%	1
L502	A700024P13	COIL RF FIX 1.0UH 10%	1
L503	A700024P13	COIL RF FIX 1.0UH 10%	1
L504	A700024P13	COIL RF FIX 1.0UH 10%	1
L505	L855671P1	COIL RADIO FREQUENCY	1
L506	A700024P13	COIL RF FIX 1.0UH 10%	1
L507	A700024P13	COIL RF FIX 1.0UH 10%	1
L508	A700024P4	COIL RF FIX 0.18UH 10%	1
L601	A700024P13	COIL RF FIX 1.0UH 10%	1
L602	A700024P13	COIL RF FIX 1.0UH 10%	1
L603	A700024P13	COIL RF FIX 1.0UH 10%	1
L604	A700024P13	COIL RF FIX 1.0UH 10%	1
L605	L855671P1	COIL RADIO FREQUENCY	1
L606	A700024P13	COIL RF FIX 1.0UH 10%	1
L607	A700024P13	COIL RF FIX 1.0UH 10%	1
L608	A700024P2	COIL RF FIX 0.12UH 10%	1
L609	K805653G10	COIL RF FIXED 10 1/2T	1
L701	K805570G4	COIL ASM	1
L702	A700024P43	COIL RF FIX 330UH 10%	1
L703	A700024P27	COIL RF FIX 15UH 10%	1
P102	J707064P112	CONN PWB FEM 12-CKT	1
P105	A701883P4	CONN PWB FEM RECP	1

Pos	Code No.	Description	Qt
Q100	J707388P1	TSTR NPN SI BFR 53	1
Q101	J707388P1	TSTR NPN SI BFR 53	1
Q102	A701940P1	TSTR NPN SI RF-PWR 0.4W	1
Q103	A700063P1	TSTR NPN SI RF-PWR 2.0W	1
Q104	J709163P1	TSTR NPN SI RF-PWR 10W	1
Q105	J708133P1	TSTR NPN SI RF-PWR 28W G1/G2/G3	1
Q106	J707432P1	TSTR PNP SI BCX 18	1
Q107	J707386P1	TSTR NPN SI BCW 32	1
Q108	J708406P1	TSTR NPN SI BD 233	1
Q109	J707386P1	TSTR NPN SI BCW 32	1
Q201	J707435P1	TSTR PNP SI BC 369	1
Q202	J707386P1	TSTR NPN SI BCW 32	1
Q203	J707432P1	TSTR PNP SI BCX 18	1
Q204	J707386P1	TSTR NPN SI BCW 32	1
Q301	J706011P2	TSTR NPN SI BFR 91A	1
Q302	J708315P1	TSTR JFET SI 2N5245	1
Q401	J707817P1	TSTR JFET SI J 309	1
Q402	J707817P1	TSTR JFET SI J 309	1
Q403	J707419P1	TSTR JFET SI BF511	1
Q404	J708418P1	TSTR NPN SI BFS 20	1
Q405	J708418P1	TSTR NPN SI BFS 20	1
Q406	J708418P1	TSTR NPN SI BFS 20	1
Q407	J707386P1	TSTR NPN SI BCW 32	1
Q408	J707387P1	TSTR PNP SI BCW 30	1
Q501	J707817P1	TSTR JFET SI J 309	1
Q502	J707388P1	TSTR NPN SI BFR 53	1
Q601	J707817P1	TSTR JFET SI J 309	1
Q602	J707388P1	TSTR NPN SI BFR 53	1
Q603	J708318P1	TSTR PNP SI BFT 92	1
Q604	J707433P1	TSTR MFET SI BF 989	1
Q605	J707386P1	TSTR NPN SI BCW 32	1
Q612	J707386P1	TSTR NPN SI BCW 32	1
Q613	J707386P1	TSTR NPN SI BCW 32	1
Q701	J707419P1	TSTR JFET SI BF511	1
Q702	J707387P1	TSTR PNP SI BCW 30	1
R000	J707385P332	RES MFLM 1/8W 3K3 5%	1
R100	J707385P122	RES MFLM 1/8W 1K2 5%	1
R101	J707385P472	RES MFLM 1/8W 4K7 5%	1
R102	J707385P270	RES MFLM 1/8W 27R 5%	1
R103	J707385P470	RES MFLM 1/8W 47R 5%	1
R104	J707385P102	RES MFLM 1/8W 1K0 5%	1
R105	J707385P182	RES MFLM 1/8W 1K8 5%	1
R106	J707385P470	RES MFLM 1/8W 47R 5%	1
R107	J707385P680	RES MFLM 1/8W 68R 5%	1
R108	J707385P560	RES MFLM 1/8W 56R 5%	1
R109	J707385P100	RES MFLM 1/8W 10R 5%	1
R110	J707385P100	RES MFLM 1/8W 10R 5%	1
R111	J707385P100	RES MFLM 1/8W 10R 5%	1
R112	J707385P947	RES MFLM 1/8W 4R7 20%	1
R113	J707385P100	RES MFLM 1/8W 10R 5%	1
R114	J707385P947	RES MFLM 1/8W 4R7 20%	1
R115	J707385P100	RES MFLM 1/8W 10R 5% G1/G2/G3	1
R116	J707385P220	RES MFLM 1/8W 22R 5% G1/G2/G3	1
R117	J707385P220	RES MFLM 1/8W 22R 5% G1/G2/G3	1
R118	J707385P473	RES MFLM 1/8W 47K 5%	1

PARTS LIST FOR RADIO FREQUENCY BOARD RF611X : M905761GX BD. REV.2/P

Pos	Code No.	Description	Qt
R119	J707385P820	RES MFLM 1/8W 82R 5%	1
R120	J707385P820	RES MFLM 1/8W 82R 5%	1
R121	J707385P333	RES MFLM 1/8W 33K 5%	1
R122	J707385P221	RES MFLM 1/8W 220R 5%	1
R123	J707385P221	RES MFLM 1/8W 220R 5%	1
R132	J708538P9	RES VAR CERM 200K 20%	1
R133	J708538P4	RES VAR CERM 5K0 20%	1
R134	J707385P100	RES MFLM 1/8W 10R 5%	1
R135	J706147P2	RES THERM PTC 80R 25%	1
R136	J707385P682	RES MFLM 1/8W 6K8 5%	1
R137	J707385P223	RES MFLM 1/8W 22K 5%	1
R138	J707385P472	RES MFLM 1/8W 4K7 5%	1
R139	J707385P472	RES MFLM 1/8W 4K7 5%	1
R140	J707385P333	RES MFLM 1/8W 33K 5%	1
R141	J707385P333	RES MFLM 1/8W 33K 5%	1
R142	J707385P104	RES MFLM 1/8W 100K 5%	1
R143	J707385P222	RES MFLM 1/8W 2K2 5%	1
R144	J707385P222	RES MFLM 1/8W 2K2 5%	1
R145	J707385P223	RES MFLM 1/8W 22K 5%	1
R146	J707385P104	RES MFLM 1/8W 100K 5%	1
R147	J707385P104	RES MFLM 1/8W 100K 5%	1
R148	J707385P123	RES MFLM 1/8W 12K 5%	1
R149	J707385P472	RES MFLM 1/8W 4K7 5%	1
R150	J707385P391	RES MFLM 1/8W 390R 5%	1
R151	J707385P683	RES MFLM 1/8W 68K 5%	1
R152	J707385P104	RES MFLM 1/8W 100K 5%	1
R153	J707385P472	RES MFLM 1/8W 4K7 5%	1
R154	J707385P274	RES MFLM 1/8W 270K 5%	1
R155	J707385P682	RES MFLM 1/8W 6K8 5%	1
R156	J707385P102	RES MFLM 1/8W 1K0 5%	1
R157	J707385P392	RES MFLM 1/8W 3K9 5%	1
R158	J707385P472	RES MFLM 1/8W 4K7 5%	1
R159	J707385P104	RES MFLM 1/8W 100K 5% G1/G2/G3	1
R159	J707385P102	RES MFILM 1/8W 1K0 5% G4/G5/G6	1
R160	J709725P1	RES THERM PTC 1K0 G1/G2/G3	1
R161	J707385P331	RES MFLM 1/8W 330R 5% G1/G2/G3	1
R162	J707385P331	RES MFLM 1/8W 330R 5% G1/G2/G3	1
R163	J707385P561	RES MFLM 1/8W 560R 5%	1
R164	J707385P471	RES MFLM 1/8W 470R 5%	1
R165	J707385P391	RES MFLM 1/8W 390R 5% G1/G2/G3	1
R201	J707385P561	RES MFLM 1/8W 560R 5%	1
R202	J707385P271	RES MFLM 1/8W 270R 5%	1
R203	J707385P153	RES MFLM 1/8W 15K 5%	1
R204	J707385P153	RES MFLM 1/8W 15K 5%	1
R205	J707385P472	RES MFLM 1/8W 4K7 5%	1
R206	J707385P272	RES MFLM 1/8W 2K7 5%	1
R207	J707385P563	RES MFLM 1/8W 56K 5%	1
R208	J707385P563	RES MFLM 1/8W 56K 5%	1
R209	J707385P271	RES MFLM 1/8W 270R 5%	1
R301	J707385P471	RES MFLM 1/8W 470R 5%	1
R302	J707385P391	RES MFLM 1/8W 390R 5%	1
R303	J707385P104	RES MFLM 1/8W 100K 5%	1
R304	J707385P104	RES MFLM 1/8W 100K 5%	1

Pos	Code No.	Description	Qt
R305	J707385P900	RES MFLM 1/8W 0R JUMPER	1
R306	J707385P222	RES MFLM 1/8W 2K2 5%	1
R307	J707385P681	RES MFLM 1/8W 680R 5%	1
R308	J707385P470	RES MFLM 1/8W 47R 5%	1
R309	J707385P270	RES MFLM 1/8W 27R 5%	1
R310	J707385P104	RES MFLM 1/8W 100K 5%	1
R311	J707385P560	RES MFLM 1/8W 56R 5%	1
R312	J707385P104	RES MFLM 1/8W 100K 5%	1
R314	J707385P104	RES MFLM 1/8W 100K 5%	1
R316	J707385P104	RES MFLM 1/8W 100K 5%	1
R317	J707385P182	RES MFLM 1/8W 1K8 5%	1
R318	J707385P100	RES MFLM 1/8W 10R 5%	1
R319	J707385P101	RES MFLM 1/8W 100R 5%	1
R321	J707385P270	RES MFLM 1/8W 27R 5%	1
R322	J707385P391	RES MFLM 1/8W 390R 5%	1
R323	J707385P104	RES MFLM 1/8W 100K 5%	1
R324	J707385P104	RES MFLM 1/8W 100K 5%	1
R325	J707385P100	RES MFLM 1/8W 10R 5%	1
R326	J707385P392	RES MFLM 1/8W 3K9 5%	1
R327	J707385P102	RES MFLM 1/8W 1K0 5%	1
R401	J707385P560	RES MFLM 1/8W 56R 5%	1
R402	J707385P100	RES MFLM 1/8W 10R 5%	1
R403	J707385P332	RES MFLM 1/8W 3K3 5%	1
R405	J707385P100	RES MFLM 1/8W 10R 5%	1
R406	J707385P820	RES MFLM 1/8W 82R 5%	1
R407	J707385P470	RES MFLM 1/8W 47R 5%	1
R408	J707385P470	RES MFLM 1/8W 47R 5%	1
R410	J707385P272	RES MFLM 1/8W 2K7 5%	1
R411	J707385P682	RES MFLM 1/8W 6K8 5%	1
R412	J707385P272	RES MFLM 1/8W 2K7 5%	1
R413	J707385P471	RES MFLM 1/8W 470R 5%	1
R414	J707385P220	RES MFLM 1/8W 22R 5%	1
R415	J707385P222	RES MFLM 1/8W 2K2 5%	1
R416	J707385P562	RES MFLM 1/8W 5K6 5%	1
R417	J707385P103	RES MFLM 1/8W 10K 5%	1
R418	J707385P153	RES MFLM 1/8W 15K 5%	1
R419	J707385P182	RES MFLM 1/8W 1K8 5%	1
R420	J707385P182	RES MFLM 1/8W 1K8 5%	1
R421	J707385P182	RES MFLM 1/8W 1K8 5%	1
R422	J707385P473	RES MFLM 1/8W 47K 5%	1
R423	J707385P153	RES MFLM 1/8W 15K 5%	1
R424	J708538P5	RES VAR CERM 10K 20%	1
R425	J707385P272	RES MFLM 1/8W 2K7 5% G3/G6 ✱	1
R425	J707385P153	RES MFLM 1/8W 15K 5% G1/2/4/5✱	1
R426	J707385P473	RES MFLM 1/8W 47K 5% G3/G6 ✱	1
R426	J707385P563	RES MFLM 1/8W 56K 5% G1/2/4/5✱	1
R427	J707385P473	RES MFLM 1/8W 47K 5% G3/G6 ✱	1
R427	J707385P393	RES MFLM 1/8W 39K 5% ✱ G1/G2/G4/G5 ✱	1
R428	J707385P563	RES MFLM 1/8W 56K 5% G3/G6 ✱	1
R428	J707385P273	RES MFLM 1/8W 27K 5% ✱ G2/G3/G5/G6	1
R429	J707385P104	RES MFLM 1/8W 100K 5%	1
R430	J707385P274	RES MFLM 1/8W 270K 5% G1/G2/G4/G5	1
R430	J707385P334	RES MFLM 1/8W 330K 5% G3/G6	1
R431	J707385P473	RES MFLM 1/8W 47K 5%	1
R432	J707385P473	RES MFLM 1/8W 47K 5%	1
R433	J707385P271	RES MFLM 1/8W 270R 5%	1

Pos	Code No.	Description	Qt
R434	J707385P102	RES MFLM 1/8W 1K0 5%	1
R435	J706147P3	RES THERM PTC 250R 25%	1
R436	J707385P392	RES MFLM 1/8W 3K9 5%	1
R437	J707406P7	RES THERM NTC 220R 10%	1
R438	J707385P222	RES MFLM 1/8W 2K2 5%	1
R439	J707385P392	RES MFLM 1/8W 3K9 5%	1
R440	J707385P392	RES MFLM 1/8W 3K9 5%	1
R441	J707385P101	RES MFLM 1/8W 100R 5%	1
R442	J708538P6	RES VAR CERM 20K 20%	1
R444	J707385P473	RES MFLM 1/8W 47K 5%	1
R445	J707385P273	RES MFLM 1/8W 27K 5%	1
R446	J707385P224	RES MFLM 1/8W 220K 5%	1
R447	J707385P392	RES MFLM 1/8W 3K9 5%	1
R448	J707385P101	RES MFLM 1/8W 100R 5%	1
R449	J707385P470	RES MFLM 1/8W 47R 5%	1
R450	J707385P103	RES MFLM 1/8W 10K 5%	1
R451	J707385P332	RES MFLM 1/8W 3K3 5%	1
R452	J707385P332	RES MFLM 1/8W 3K3 5%	1
R501	J707385P122	RES MFLM 1/8W 1K2 5%	1
R502	J707385P122	RES MFLM 1/8W 1K2 5%	1
R503	J707385P122	RES MFLM 1/8W 1K2 5%	1
R504	J707385P104	RES MFLM 1/8W 100K 5%	1
R505	J707385P104	RES MFLM 1/8W 100K 5%	1
R506	J707385P104	RES MFLM 1/8W 100K 5%	1
R508	J707385P103	RES MFLM 1/8W 10K 5%	1
R509	J707385P910	RES MFLM 1/8W 1R0 20%	1
R510	J707385P332	RES MFLM 1/8W 3K3 5%	1
R512	J707385P561	RES MFLM 1/8W 560R 5%	1
R513	J707385P183	RES MFLM 1/8W 18K 5%	1
R514	J707385P472	RES MFLM 1/8W 4K7 5%	1
R515	J707385P470	RES MFLM 1/8W 47R 5%	1
R517	J707385P101	RES MFLM 1/8W 100R 5%	1
R518	J707385P470	RES MFLM 1/8W 47R 5%	1
R519	J707385P221	RES MFLM 1/8W 220R 5%	1
R529	J707385P392	RES MFLM 1/8W 3K9 5%	1
R601	J707385P122	RES MFLM 1/8W 1K2 5%	1
R602	J707385P122	RES MFLM 1/8W 1K2 5%	1
R603	J707385P122	RES MFLM 1/8W 1K2 5%	1
R604	J707385P104	RES MFLM 1/8W 100K 5%	1
R605	J707385P104	RES MFLM 1/8W 100K 5%	1
R606	J707385P104	RES MFLM 1/8W 100K 5%	1
R607	J707385P561	RES MFLM 1/8W 560R 5%	1
R608	J707385P221	RES MFLM 1/8W 220R 5%	1
R609	J707385P472	RES MFLM 1/8W 4K7 5%	1
R610	J707385P183	RES MFLM 1/8W 18K 5%	1
R611	J707385P271	RES MFLM 1/8W 270R 5%	1
R612	J707385P222	RES MFLM 1/8W 2K2 5%	1
R613	J707385P101	RES MFLM 1/8W 100R 5%	1
R614	J707385P561	RES MFLM 1/8W 560R 5%	1
R615	J707385P272	RES MFLM 1/8W 2K7 5%	1
R616	J707385P470	RES MFLM 1/8W 47R 5%	1
R617	J707385P683	RES MFLM 1/8W 68K 5%	1
R618	J707385P683	RES MFLM 1/8W 68K 5%	1
R619	J707385P104	RES MFLM 1/8W 100K 5%	1
R620	J707385P271	RES MFLM 1/8W 270R 5%	1
R621	J707385P561	RES MFLM 1/8W 560R 5%	1
R622	J707385P102	RES MFLM 1/8W 1K0 5%	1
R623	J707385P224	RES MFLM 1/8W 220K 5%	1
R624	J707385P223	RES MFLM 1/8W 22K 5%	1

Pos	Code No.	Description	Qt
R625	J707385P470	RES MFLM 1/8W 47R 5%	1
R626	J707385P100	RES MFLM 1/8W 10R 5%	1
R627	J707385P103	RES MFLM 1/8W 10K 5%	1
R628	J707385P224	RES MFLM 1/8W 220K 5%	1
R629	J707385P393	RES MFLM 1/8W 39K 5%	1
R630	J707385P100	RES MFLM 1/8W 10R 5%	1
R631	J707385P824	RES MFLM 1/8W 820K 5%	1
R632	J707385P223	RES MFLM 1/8W 22K 5%	1
R633	J707385P824	RES MFLM 1/8W 820K 5%	1
R634	J707385P123	RES MFLM 1/8W 12K 5%	1
R635	J707385P102	RES MFLM 1/8W 1K0 5%	1
R636	J707385P332	RES MFLM 1/8W 3K3 5%	1
R637	J707385P181	RES MFLM 1/8W 180R 5%	1
R638	J707385P154	RES MFLM 1/8W 150K 5%	1
R639	J707385P682	RES MFLM 1/8W 6K8 5%	1
R640	J707385P105	RES MFLM 1/8W 1M0 10%	1
R641	J707385P184	RES MFLM 1/8W 180K 5%	1
R642	J707385P184	RES MFLM 1/8W 180K 5%	1
R643	J707385P105	RES MFLM 1/8W 1M0 10%	1
R644	J707385P333	RES MFLM 1/8W 33K 5%	1
R645	J707385P103	RES MFLM 1/8W 10K 5%	1
R646	J707385P682	RES MFLM 1/8W 6K8 5%	1
R647	J707385P333	RES MFLM 1/8W 33K 5%	1
R648	J707385P823	RES MFLM 1/8W 82K 5%	1
R649	J707385P393	RES MFLM 1/8W 39K 5%	1
R650	J707385P393	RES MFLM 1/8W 39K 5%	1
R651	J707385P333	RES MFLM 1/8W 33K 5%	1
R652	J707385P222	RES MFLM 1/8W 2K2 5%	1
R653	J707385P333	RES MFLM 1/8W 33K 5%	1
R654	J707385P562	RES MFLM 1/8W 5K6 5%	1
R655	J707385P183	RES MFLM 1/8W 18K 5%	1
R656	J707385P393	RES MFLM 1/8W 39K 5%	1
R657	J707385P823	RES MFLM 1/8W 82K 5%	1
R658	J707385P154	RES MFLM 1/8W 150K 5%	1
R659	J707385P103	RES MFLM 1/8W 10K 5%	1
R660	J707385P333	RES MFLM 1/8W 33K 5%	1
R661	J707385P393	RES MFLM 1/8W 39K 5%	1
R662	J707385P473	RES MFLM 1/8W 47K 5%	1
R663	J708538P6	RES VAR CERM 20K 20%	1
R664	J707385P563	RES MFLM 1/8W 56K 5%	1
R665	J707385P224	RES MFLM 1/8W 220K 5%	1
R666	J707385P124	RES MFLM 1/8W 120K 5%	1
R667	J707385P124	RES MFLM 1/8W 120K 5%	1
R668	J707385P122	RES MFLM 1/8W 1K2 5%	1
R669	J707385P221	RES MFLM 1/8W 220R 5%	1
R670	J707385P103	RES MFLM 1/8W 10K 5%	1
R671	J707385P562	RES MFLM 1/8W 5K6 5%	1
R672	J707385P822	RES MFLM 1/8W 8K2 5%	1
R673	J707385P822	RES MFLM 1/8W 8K2 5%	1
R674	J707385P101	RES MFLM 1/8W 100R 5%	1
R675	J708538P5	RES VAR CERM 10K 20%	1
R676	J707385P102	RES MFLM 1/8W 1K0 5%	1
R677	J708538P5	RES VAR CERM 10K 20%	1
R678	J707385P470	RES MFLM 1/8W 47R 5%	1
R679	J707385P821	RES MFLM 1/8W 820R 5%	1
R680	J708538P6	RES VAR CERM 20K 20%	1
R681	J707385P223	RES MFLM 1/8W 22K 5%	1
R682	J707385P152	RES MFLM 1/8W 1K5 5%	1
R683	J707385P223	RES MFLM 1/8W 22K 5%	1

PARTS LIST FOR RADIO FREQUENCY BOARD RF611X : M905761GX BD. REV.2/P

Pos	Code No.	Description	Qt
R684	J707385P183	RES MFLM 1/8W 18K 5%	1
R685	J707385P183	RES MFLM 1/8W 18K 5%	1
R686	J707385P103	RES MFLM 1/8W 10K 5%	1
R687	J707385P103	RES MFLM 1/8W 10K 5%	1
R689	J707385P105	RES MFLM 1/8W 1MO 10%	1
R690	J707385P124	RES MFLM 1/8W 120K 5%	1
R691	J707385P273	RES MFLM 1/8W 27K 5%	1
R692	J707385P223	RES MFLM 1/8W 22K 5%	1
R693	J707385P105	RES MFLM 1/8W 1MO 10%	1
R694	J707385P223	RES MFLM 1/8W 22K 5%	1
R695	J707385P105	RES MFLM 1/8W 1MO 10%	1
R696	J707385P223	RES MFLM 1/8W 22K 5%	1
R697	J707385P105	RES MFLM 1/8W 1MO 10%	1
R698	J707385P103	RES MFLM 1/8W 10K 5%	1
R701	J708666P1	RES THERM NTC 5K 2%	1
R702	A701250P420	RES MFLM 1/4W 158K 1% *	1
R703	A701250P178	RES MFLM 1/4W 634R 1% *	1
R704	A701250P342	RES MFLM 1/4W 2K7 1% *	1
R705	J708666P2	RES THERM NTC 20K 2%	1
R706	J708666P2	RES THERM NTC 20K 2%	1
R707	J707385P104	RES MFLM 1/8W 100K 5%	1
R708	J707385P105	RES MFLM 1/8W 1MO 10%	1
R709	J707385P181	RES MFLM 1/8W 180R 5%	1
R710	J707385P101	RES MFLM 1/8W 100R 5%	1
R711	J707385P223	RES MFLM 1/8W 22K 5%	1
R712	J707385P154	RES MFLM 1/8W 150K 5%	1
R713	J707385P821	RES MFLM 1/8W 820R 5%	1
R714	J707385P104	RES MFLM 1/8W 100K 5%	1
U100	J708165P2	IC LIN OP-AMP 324	1
U201	J708333P1	IC LIN VR FIX 4785	1
U401	J707449P1	IC LIN IF-AMP 3357	1
U402	M905766G1	INT CKT SQ 4002 G1/G4	1
U402	M905766G2	INT CKT SQ 4003 G3/G6	1
U402	M905766G3	INT CKT SQ 4004 G2/G5	1
U601	J707859P1	IC LIN OP-AMP 204	1
U602	J707859P1	IC LIN OP-AMP 204	1
U603	J707859P1	IC LIN OP-AMP 204	1
U604	J707859P1	IC LIN OP-AMP 204	1
U606	J707243P1	IC DIG REG 4094	1
U607	J707374P3	IC PLL PRESC 12017	1
U608	B800902P1	IC PLL SYN CUSTOM DES	1
U609	J707859P1	IC LIN OP-AMP 204	1
U610	J708503P2	IC LIN CMPAR LM 339	1
U615	J708621P2	CPLR OPTO PC 827	1
U616	J708503P2	IC LIN CMPAR LM 339	1
W001	A700184P1	RES WIRE JMPR OR JUMPER	1
W003	J707256P1	COIL FIX	1
W004	J707256P1	COIL FIX	1
W005	J708717P1	STRAP	1
W006	J709241P1	STRAP	1
W007	J709241P1	STRAP	1
Y401	J708426P1	CRYSTAL UNIT 44.5450MHZ	1
Y701	J707567P19	CRYSTAL UNIT 7.4000MHZ	1
Z401	J708330P1	FLTR CRY 45.0 +/-7.5KHz G1/G4	1
Z401	J708330P2	FLTR CRY 45.0 +/-6.0KHz G2/G5	1
Z401	J708330P3	FLTR CRY 45.0 +/-3.75KHz G3/G6	1
Z402	J707446P1	FLTR CER 455K +/-10KHz G1/G4	1
Z402	J707446P3	FLTR CER 455K +/-7.5KHz G2/G5	1
Z402	J707446P4	FLTR CER 455K +/-4.5KHz G3/G6	1
Z403	J707446P1	FLTR CER 455K +/-10KHz G1/G4	1
Z403	J707446P3	FLTR CER 455K +/-7.5KHz G2/G5	1
Z403	J707446P4	FLTR CER 455K +/-4.5KHz G3/G6	1
	M905762P1R2	BD PW G1/G2/G3	1
	M905762P2R2	BD PW G4/G5/G6	1
		NON REFERENCED ITEMS:	
	J708966G1	HEAT SINK MODF	1
	K805569G2	SHIELD METALLIZED	1
	J706281P6	CORE SCREW FERR U 10	8
	J708561P3	COIL FIXED	1
	J708561P3	COIL FIXED	1
	J708561P3	COIL FIXED	1
	J706804P3	WASH INS CRYS FOR HC-45/U	2
	J706804P2	WASH INS CRYS FOR HC-18/U	2

51-4426 B01

PARTS LIST FOR RADIO FREQUENCY BOARD RF611X : M905761GX BD. REV.2/L

Pos	Code No.	Description	Qt
		COMPONENTS REVISED SINCE LAST EDITION ARE MARKED *	
	M905761G1	RF6112S25 CH. SPAC. 25kHz/25W OUT	
	M905761G2	RF6113S25 CH. SPAC. 20kHz/25W OUT	
	M905761G3	RF6114S25 CH. SPAC. 12.5kHz/25W OUT	
	M905761G4	RF6112S6 CH. SPAC. 25kHz/6W OUT	
	M905761G5	RF6113S6 CH. SPAC. 20kHz/6W OUT	
	M905761G6	RF6114S6 CH. SPAC. 12.5kHz/6W OUT	
C000	2113741A33	CAP CER CL2 3N3 10%	1
C001	J707809P5	CAP CER NPO 2P2 .25P G1	1
C100	J707809P10	CAP CER NPO 5P6 .25P	1
C101	2113741A17	CAP CER CL2 680P 10%	1
C102	J707809P8	CAP CER NPO 3P9 .25P	1
C103	J707809P27	CAP CER NPO 150P 5%	1
C104	J707809P19	CAP CER NPO 33P 5%	1
C105	J707809P13	CAP CER NPO 10P 5%	1
C106	2113741M45	CAP CER CL2 10N 10%	1
C107	J707809P25	CAP CER NPO 100P 5%	1
C108	J707809P22	CAP CER NPO 56P 5%	1
C109	J707809P17	CAP CER NPO 22P 5%	1
C110	2113741M45	CAP CER CL2 10N 10%	1
C111	J707809P25	CAP CER NPO 100P 5%	1
C112	2113741A17	CAP CER CL2 680P 10%	1
C113	J707809P21	CAP CER NPO 47P 5%	1
C114	J707809P25	CAP CER NPO 100P 5%	1
C115	J707809P24	CAP CER NPO 82P 5%	1
C116	2113741M45	CAP CER CL2 10N 10%	1
C117	J707809P26	CAP CER NPO 120P 5%	1
C118	2113741M45	CAP CER CL2 10N 10%	1
C119	2113741A17	CAP CER CL2 680P 10%	1
C120	J707809P23	CAP CER NPO 68P 5%	1
C121	J707809P23	CAP CER NPO 68P 5%	1
C122	A700006P34	CAP MICA 100P 5%	1
C123	2113741M45	CAP CER CL2 10N 10%	1
C124	J707809P26	CAP CER NPO 120P 5%	1
C125	2113741A17	CAP CER CL2 680P 10%	1
C126	2113741M45	CAP CER CL2 10N 10%	1
C127	J707353P6	CAP ELECT 4U7 25V	1
C128	J707809P27	CAP CER NPO 150P 5%	1
C129	J707809P27	CAP CER NPO 150P 5%	1
C130	A700006P32	CAP MICA 82P 5% G1/G2/G3	1
C130	A700006P30	CAP MICA 68P 5% G4/G5/G6	1
C131	A700006P41	CAP MICA 180P 5% G1/G2/G3	1
C131	A700006P32	CAP MICA 82P 5% G4/G5/G6	1
C132	A700006P41	CAP MICA 180P 5% G1/G2/G3	1
C133	2113741C17	CAP CER CL2 100N 10% G1/G2/G3	1
C134	J707809P26	CAP CER NPO 120P 5% G1/G2/G3	1
C135	2113741A17	CAP CER CL2 680P 10%	1
C136	A700006P26	CAP MICA 47P 5% G1/G2/G3	1
C137	A700006P34	CAP MICA 100P 5% G1/G2/G3	1
C138	J707809P27	CAP CER NPO 150P 5%	1
C139	J707809P27	CAP CER NPO 150P 5%	1
C140	J707809P27	CAP CER NPO 150P 5%	1
C141	J707809P27	CAP CER NPO 150P 5%	1
C142	A700006P6	CAP MICA 10P 5%	1
C143	A700006P22	CAP MICA 36P 5%	1
C144	A700006P22	CAP MICA 36P 5%	1
C145	A700006P11	CAP MICA 15P 5%	1
C146	2113741A17	CAP CER CL2 680P 10%	1
C147	2113741A17	CAP CER CL2 680P 10%	1
C148	2113741A17	CAP CER CL2 680P 10%	1
C149	2113741A17	CAP CER CL2 680P 10%	1
C150	J707809P1	CAP CER NPO 1P0 .25P	1
C151	J707809P1	CAP CER NPO 1P0 .25P	1
C152	2113741A17	CAP CER CL2 680P 10%	1
C153	2113741A17	CAP CER CL2 680P 10%	1
C154	2113741A17	CAP CER CL2 680P 10%	1
C155	2113741A17	CAP CER CL2 680P 10%	1
C156	J707353P3	CAP ELECT 0U47 50V	1
C157	2113741A17	CAP CER CL2 680P 10%	1
C158	2113741A17	CAP CER CL2 680P 10%	1
C159	2113741M45	CAP CER CL2 10N 10%	1
C160	2113741A17	CAP CER CL2 680P 10%	1
C161	2113741M45	CAP CER CL2 10N 10%	1
C162	2113741M45	CAP CER CL2 10N 10%	1
C163	2113741C05	CAP CER CL2 33N 10%	1
C164	2113741A17	CAP CER CL2 680P 10%	1
C165	2113741A17	CAP CER CL2 680P 10%	1
C166	2113741A17	CAP CER CL2 680P 10%	1
C167	A701413P34	CAP MICA 100P 5% G1/G2/G3	1
C167	A701413P38	CAP MICA 150P 5% G4/G5/G6	1
C168	A700006P28	CAP MICA 56P 5% G1/G2/G3	1
C168	A700006P32	CAP MICA 82P 5% G4/G5/G6	1
C169	A700006P9	CAP MICA 13P 5% G1/G2/G3	1
C169	A700006P22	CAP MICA 36P 5% G4/G5/G6	1
C170	J707809P8	CAP CER NPO 3P9 .25P G1/G2/G3	1
C170	J707809P13	CAP CER NPO 10P 5% G4/G5/G6	1
C172	2113741M45	CAP CER CL2 10N 10%	1

Pos	Code No.	Description	Qt
C173	2113740A71	CAP CER NPO 470P 5%	1
C174	2113741A33	CAP CER CL2 3N3 10%	1
C175	2113741M21	CAP CER CL2 1N 10%	1
C176	2113741M45	CAP CER CL2 10N 10%	1
C201	2113741C17	CAP CER CL2 100N 10%	1
C202	J707444P8	CAP TA SOL 22U 16V	1
C203	J707444P6	CAP TA SOL 4U7 35V	1
C204	2113740A71	CAP CER NPO 470P 5%	1
C205	J707412P9	CAP PYES 100N 10%	1
C301	2113740A07	CAP CER NPO 1P5 .25P	1
C302	2113741M21	CAP CER CL2 1N 10%	1
C304	2113740A13	CAP CER NPO 2P7 .25P	1
C305	2113740A33	CAP CER NPO 15P 5%	1
C306	J707483P1	CAP PHEN 0P47 5%	1
C307	2113741M21	CAP CER CL2 1N 10% G1/G2/G3	1
C307	2113741A17	CAP CER CL2 680P 10% G4/G5/G6	1
C309	2113740A33	CAP CER NPO 15P 5%	1
C310	2113741M21	CAP CER CL2 1N 10%	1
C311	2113741M21	CAP CER CL2 1N 10%	1
C312	2113740C19	CAP CER NPO 1N2 5%	1
C314	2113740A11	CAP CER NPO 2P2 .25P	1
C315	2113741M21	CAP CER CL2 1N 10%	1
C316	2113740A11	CAP CER NPO 2P2 .25P	1
C317	J707444P2	CAP TA SOL 0U22 35V	1
C318	2113741M21	CAP CER CL2 1N 10%	1
C319	2113740A33	CAP CER NPO 15P 5%	1
C320	2113741M21	CAP CER CL2 1N 10%	1
C322	J707483P7	CAP PHEN 1P00 5%	1
C323	J707483P5	CAP PHEN 0P68 5%	1
C324	J707483P4	CAP PHEN 0P56 5%	1
C325	2113741M21	CAP CER CL2 1N 10%	1
C326	2113740A33	CAP CER NPO 15P 5%	1
C328	2113740A33	CAP CER NPO 15P 5%	1
C331	2113740A33	CAP CER NPO 15P 5%	1
C332	2113740A33	CAP CER NPO 15P 5%	1
C333	J707483P13	CAP PHEN 0P22 10%	1
C335	2113741M21	CAP CER CL2 1N 10%	1
C338	2113740A24	CAP CER NPO 6P8 .25P	1
C339	2113741M21	CAP CER CL2 1N 10%	1
C340	2113741A33	CAP CER CL2 3N3 10%	1
C345	2113740A41	CAP CER NPO 33P 5%	1
C347	2113741M21	CAP CER CL2 1N 10%	1
C348	2113741M21	CAP CER CL2 1N 10%	1
C350	2113740A07	CAP CER NPO 1P5 .25P	1
C351	2113740A29	CAP CER NPO 10P 5%	1
C353	J707483P2	CAP PHEN 0P33 5%	1
C354	2113740A29	CAP CER NPO 10P 5%	1
C355	J707483P8	CAP PHEN 1P20 5%	1
C356	2113741M21	CAP CER CL2 1N 10%	1
C357	2113740A03	CAP CER NPO 1P0 .25P	1
C358	2113740A03	CAP CER NPO 1P0 .25P	1
C359	2113740A03	CAP CER NPO 1P0 .25P	1
C401	2113741A33	CAP CER CL2 3N3 10%	1
C402	2113741A33	CAP CER CL2 3N3 10%	1
C403	2113741A33	CAP CER CL2 3N3 10%	1
C404	2113740A19	CAP CER NPO 4P7 .25P	1
C405	2113741C17	CAP CER CL2 100N 10%	1
C406	2113740A21	CAP CER NPO 5P6 .25P	1
C407	2113740A19	CAP CER NPO 4P7 .25P	1
C408	2113741M21	CAP CER CL2 1N 10%	1
C409	2113741A33	CAP CER CL2 3N3 10%	1
C410	J707444P8	CAP TA SOL 22U 16V	1
C411	2113741C17	CAP CER CL2 100N 10%	1
C412	2113741C17	CAP CER CL2 100N 10%	1
C413	2113740A33	CAP CER NPO 15P 5%	1
C414	2113741A33	CAP CER CL2 3N3 10%	1
C415	2113741A33	CAP CER CL2 3N3 10%	1
C416	J708702P16	CAP CER N750 18P 5%	1
C417	2113740A49	CAP CER NPO 56P 5%	1
C418	2113741M45	CAP CER CL2 10N 10%	1
C419	2113741C17	CAP CER CL2 100N 10%	1
C420	2113741M45	CAP CER CL2 10N 10%	1
C421	2113741C17	CAP CER CL2 100N 10%	1
C422	2113741C17	CAP CER CL2 100N 10%	1
C423	2113740A29	CAP CER NPO 10P 5%	1
C424	2113741A33	CAP CER CL2 3N3 10%	1
C425	J707412P13	CAP PYES 470N 10%	1
C426	2113740C25	CAP CER NPO 2N2 5%	1
C427	2113740A67	CAP CER NPO 330P 5%	1
C428	2113740A65	CAP CER NPO 270P 5% G1/G2/G4/G5	1
C428	2113740A63	CAP CER NPO 220P 5% G3/G6	1
C429	2113741M45	CAP CER CL2 10N 10%	1
C430	J707444P8	CAP TA SOL 22U 16V	1
C431	J707444P8	CAP TA SOL 22U 16V	1
C432	2113741C17	CAP CER CL2 100N 10%	1
C433	2113741C17	CAP CER CL2 100N 10%	1
C434	2113741A33	CAP CER CL2 3N3 10%	1
C435	2113740A03	CAP CER NPO 1P0 .25P	1
C436	2113741C17	CAP CER CL2 100N 10%	1
C501	J707412P11	CAP PYES 220N 10%	1
C502	J707412P11	CAP PYES 220N 10%	1
C503	J707412P11	CAP PYES 220N 10%	1
C504	A700235P7	CAP CER N150 3P3 .25P	1
C505	A700235P4	CAP CER N150 1P8 .25P	1
C506	A700235P12	CAP CER N150 8P2 .25P	1
C507	A700235P14	CAP CER N150 12P 5%	1
C508	A700235P32	CAP CER N150 11P 5%	1
C509	A700235P10	CAP CER N150 5P6 .25P	1
C510	A700235P16	CAP CER N150 18P 5%	1
C512	A700235P3	CAP CER N150 1P5 .25P	1
C513	2113741M13	CAP CER CL2 470P 10%	1
C515	2113740A27	CAP CER NPO 8P2 .25P	1
C516	2113740A24	CAP CER NPO 6P8 .25P	1
C517	J707444P6	CAP TA SOL 4U7 35V	1
C518	2113740A07	CAP CER NPO 1P5 .25P	1
C519	2113741M13	CAP CER CL2 470P 10%	1
C520	2113740A11	CAP CER NPO 2P2 .25P	1
C521	2113740A31	CAP CER NPO 12P 5%	1
C522	2113741M13	CAP CER CL2 470P 10%	1
C523	2113740A11	CAP CER NPO 2P2 .25P	1
C524	2113741M13	CAP CER CL2 470P 10%	1
C525	2113741M13	CAP CER CL2 470P 10%	1
C526	2113741M13	CAP CER CL2 470P 10%	1
C527	2113741M13	CAP CER CL2 470P 10%	1

PARTS LIST FOR RADIO FREQUENCY BOARD RF611X : M905761GX BD. REV.2/L

Pos	Code No.	Description	Qt
C528	2113741M13	CAP CER CL2 470P 10%	1
C540	2113741M13	CAP CER CL2 470P 10%	1
C541	2113741M13	CAP CER CL2 470P 10%	1
C542	2113741M13	CAP CER CL2 470P 10%	1
C543	2113741M13	CAP CER CL2 470P 10%	1
C544	2113741M13	CAP CER CL2 470P 10%	1
C545	2113741M13	CAP CER CL2 470P 10%	1
C601	J707412P11	CAP PYES 220N 10%	1
C602	J707412P11	CAP PYES 220N 10%	1
C603	J707412P11	CAP PYES 220N 10%	1
C604	A700235P5	CAP CER N150 2P2 .25P	1
C605	A700235P5	CAP CER N150 2P2 .25P	1
C606	A700235P8	CAP CER N150 3P9 .25P	1
C607	A700235P10	CAP CER N150 5P6 .25P	1
C608	A700235P11	CAP CER N150 6P8 .25P	1
C609	A700235P36	CAP CER N150 7P5 .25P	1
C610	A700235P12	CAP CER N150 8P2 .25P	1
C611	2113740A15	CAP CER NPO 3P3 .25P	1
C612	2113740A19	CAP CER NPO 4P7 .25P	1
C613	J707444P6	CAP TA SOL 4U7 35V	1
C614	2113740A03	CAP CER NPO 1P0 .25P	1
C615	2113740A71	CAP CER NPO 470P 5%	1
C616	2113741M13	CAP CER CL2 470P 10%	1
C617	2113740A03	CAP CER NPO 1P0 .25P	1
C618	2113740A21	CAP CER NPO 5P6 .25P	1
C619	2113741M13	CAP CER CL2 470P 10%	1
C620	2113740A11	CAP CER NPO 2P2 .25P	1
C621	2113741M13	CAP CER CL2 470P 10%	1
C624	2113740A63	CAP CER NPO 220P 5%	1
C625	2113741C17	CAP CER CL2 100N 10%	1
C626	2113741M21	CAP CER CL2 1N 10%	1
C627	2113741M45	CAP CER CL2 10N 10%	1
C628	2113740C25	CAP CER NPO - 2N2 5%	1
C629	2113740A59	CAP CER NPO 150P 5%	1
C630	2113740A63	CAP CER NPO 220P 5%	1
C631	2113740A63	CAP CER NPO 220P 5%	1
C632	2113741C17	CAP CER CL2 100N 10%	1
C633	J707444P17	CAP TA SOL 47U 10V	1
C634	2113741C17	CAP CER CL2 100N 10%	1
C635	2113741M13	CAP CER CL2 470P 10%	1
C636	J707444P17	CAP TA SOL 47U 10V	1
C637	2113741C17	CAP CER CL2 100N 10%	1
C639	2113741A33	CAP CER CL2 3N3 10%	1
C640	J707412P9	CAP PYES 100N 10%	1
C641	J707412P13	CAP PYES 470N 10%	1
C642	J707412P13	CAP PYES 470N 10%	1
C643	2113741C09	CAP CER CL2 47N 10%	1
C644	J707436P6	CAP CER NPO 2P7 .25P	1
C652	2113741M21	CAP CER CL2 1N 10%	1
C653	J707444P6	CAP TA SOL 4U7 35V	1
C656	2113740A71	CAP CER NPO 470P 5%	1
C657	2113741M13	CAP CER CL2 470P 10%	1
C659	2113741M21	CAP CER CL2 1N 10%	1
C660	2113741A41	CAP CER CL2 6N8 5%	1
C665	2113741M13	CAP CER CL2 470P 10%	1
C666	2113741M13	CAP CER CL2 470P 10%	1
C667	2113741M13	CAP CER CL2 470P 10%	1
C668	2113740A55	CAP CER NPO 100P 5%	1
C701	2113740A37	CAP CER NPO 22P 5%	1

Pos	Code No.	Description	Qt
C702	J708702P22	CAP CER N750 56P 5%	1
C703	2113740A63	CAP CER NPO 220P 5%	1
C704	2113740A27	CAP CER NPO 8P2 .25P *	1
C705	2113741M21	CAP CER CL2 1N 10%	1
C706	2113741M45	CAP CER CL2 10N 10%	1
C707	2113740A21	CAP CER NPO 5P6 .25P	1
C708	2113741M45	CAP CER CL2 10N 10%	1
C709	2113741M45	CAP CER CL2 10N 10%	1
D100	A700047P3	DIO SI SIG 1N6263	1
D101	J706892P1	DIO SI PIN UM 9401	1
D102	J706892P1	DIO SI PIN UM 9401	1
D103	J707390P1	DIO SI SIG BAV 74	1
D300	J707928P2	DIO SI CAP BB 809	1
D301	J707928P2	DIO SI CAP BB 809	1
D302	J707928P2	DIO SI CAP BB 809	1
D303	J707928P2	DIO SI CAP BB 809	1
D304	J707928P2	DIO SI CAP BB 809	1
D305	J707928P2	DIO SI CAP BB 809	1
D306	J707928P2	DIO SI CAP BB 809	1
D307	J707928P2	DIO SI CAP BB 809	1
D401	A700025P8	DIO SI ZENR 6V8 5% 0.4W	1
D501	J706007P1	DIO SI CAP BB 505B	1
D502	J706007P1	DIO SI CAP BB 505B	1
D503	J706007P1	DIO SI CAP BB 505B	1
D504	J707928P2	DIO SI CAP BB 809	1
D505	J707769P1	DIO SI CAP BBY 31 *	1
D601	J706007P1	DIO SI CAP BB 505B	1
D602	J706007P1	DIO SI CAP BB 505B	1
D603	J706007P1	DIO SI CAP BB 505B	1
D604	J706007P1	DIO SI CAP BB 505B	1
D605	J707389P1	DIO SI SIG BAV 99	1
D606	J708681P1	DIO SI SIG BAW 56	1
D607	J707390P1	DIO SI SIG BAV 74	1
D608	J707390P1	DIO SI SIG BAV 74	1
D610	J708681P1	DIO SI SIG BAW 56	1
D701	J707928P2	DIO SI CAP BB 809	1
D702	J707390P1	DIO SI SIG BAV 74	1
L100	A700024P1	COIL RF FIX 0.1UH 10%	1
L101	A700024P1	COIL RF FIX 0.1UH 10%	1
L102	K805653G5	COIL ASM 5 1/2T	1
L103	J707339G1	COIL FIX ASM	1
L104	A700024P1	COIL RF FIX 0.1UH 10%	1
L105	K805653G1	COIL ASM 1 1/2T	1
L106	J707256P2	COIL FIX	1
L107	J707339G1	COIL FIX ASM	1
L108	K805653G2	COIL ASM 2 1/2T G2/G2/G3	1
L108	K805653G6	COIL ASM 6 1/2T G4/G5/G6	1
L109	J707339G1	COIL FIX ASM	1
L110	J707256P1	COIL FIX G1/G2/G3	1
L110	J707256P2	COIL FIX G4/G5/G6	1
L112	J707339G1	COIL FIX ASM	1
L113	A700024P13	COIL RF FIX 1.0UH 10%	1
L114	K805653G2	COIL ASM 2 1/2T G1/G2/G3	1
L114	K805653G4	COIL ASM 4 1/2T G4/G5/G6	1
L115	J709287P1	CORE TOR FERR	1
L116	J709287P1	CORE TOR FERR G1/G2/G3	1
L117	K805653G4	COIL ASM 4 1/2T G1/G2/G3	1
L118	J707339G1	COIL FIX ASM G1/G2/G3	1
L119	J709603P2	COIL G1/G2/G3	1

PARTS LIST FOR RADIO FREQUENCY BOARD RF611X : M905761GX BD. REV.2/L

Pos	Code No.	Description	Qt
L120	J707256P2	COIL FIX G1/G2/G3	1
L120	J707256P1	COIL FIX G4/G5/G6	1
L121	A700024P13	COIL RF FIX 1.0UH 10%	1
L122	A700024P25	COIL RF FIX 10UH 10%	1
L123	A700024P14	COIL RF FIX 1.2UH 10%	1
L124	K805653G5	COIL ASM 5 1/2T	1
L125	K805653G6	COIL ASM 6 1/2T	1
L126	K805653G5	COIL ASM 5 1/2T	1
L127	A700024P25	COIL RF FIX 10UH 10%	1
L128	A700024P25	COIL RF FIX 10UH 10%	1
L129	A700024P13	COIL RF FIX 1.0UH 10%	1
L130	K805653G2	COIL ASM 2 1/2T G1/G2/G3	1
L130	K805653G1	COIL ASM 1 1/2T G4/G5/G6	1
L131	K805653G3	COIL ASM 3 1/2T G1/G2/G3	1
L131	K805653G2	COIL ASM 2 1/2T G4/G5/G6	1
L301	J709099P13	COIL RF VAR 4-1/2T TAP	1
L302	J709099P13	COIL RF VAR 4-1/2T TAP	1
L303	J707486P6	COIL RF FIX 0.47UH 10%	1
L304	J709099P2	COIL RF VAR 4-1/2T TAP	1
L305	J707486P2	COIL RF FIX 3.3UH 10%	1
L306	J709099P7	COIL RF VAR 4-1/2T TAP	1
L308	J709099P6	COIL RF VAR 4-1/2T TAP	1
L310	J709099P2	COIL RF VAR 4-1/2T TAP	1
L312	J708428P2	COIL RF VAR 45 MHZ	1
L313	J709099P4	COIL RF VAR 3-1/2T TAP	1
L314	J709099P3	COIL RF VAR 3-1/2T TAP	1
L401	J707486P10	COIL RF FIX 1.5UH 10%	1
L403	K805570G2	COIL ASM	1
L404	K805570G1	COIL ASM	1
L405	J708428P1	COIL RF VAR 45 MHz	1
L406	K805570G3	COIL ASM	1
L407	A700024P25	COIL RF FIX 10UH 10%	1
L408	J708428P2	COIL RF VAR 45 MHz	1
L409	J707431P1	COIL RF VAR 455KHz 25%	1
L410	J707431P1	COIL RF VAR 455KHz 25%	1
L501	A700024P13	COIL RF FIX 1.0UH 10%	1
L502	A700024P13	COIL RF FIX 1.0UH 10%	1
L503	A700024P13	COIL RF FIX 1.0UH 10%	1
L504	A700024P13	COIL RF FIX 1.0UH 10%	1
L505	L855671P1	COIL RADIO FREQUENCY	1
L506	A700024P13	COIL RF FIX 1.0UH 10%	1
L507	A700024P13	COIL RF FIX 1.0UH 10%	1
L508	A700024P4	COIL RF FIX 0.18UH 10%	1
L601	A700024P13	COIL RF FIX 1.0UH 10%	1
L602	A700024P13	COIL RF FIX 1.0UH 10%	1
L603	A700024P13	COIL RF FIX 1.0UH 10%	1
L604	A700024P13	COIL RF FIX 1.0UH 10%	1
L605	L855671P1	COIL RADIO FREQUENCY	1
L606	A700024P13	COIL RF FIX 1.0UH 10%	1
L607	A700024P13	COIL RF FIX 1.0UH 10%	1
L608	A700024P2	COIL RF FIX 0.12UH 10%	1
L609	K805653G10	COIL RF FIXED 10 1/2T	1
L701	K805570G4	COIL ASM	1
L702	A700024P43	COIL RF FIX 330UH 10%	1
L703	A700024P27	COIL RF FIX 15UH 10%	1
P102	J707064P112	CONN PWB FEM 12-CKT	1
P105	A701883P4	CONN PWB FEM RECP	1
Q100	J707388P1	TSTR NPN SI BFR 53	1
Q101	J707388P1	TSTR NPN SI BFR 53	1

Pos	Code No.	Description	Qt
Q102	A701940P1	TSTR NPN SI RF-PWR 0.4W	1
Q103	A700063P1	TSTR NPN SI RF-PWR 2.0W	1
Q104	J709163P1	TSTR NPN SI RF-PWR 10W	1
Q105	J708133P1	TSTR NPN SI RF-PWR 28W G1/G2/G3	1
Q106	J707432P1	TSTR PNP SI BCX 18	1
Q107	J707386P1	TSTR NPN SI BCW 32	1
Q108	J708406P1	TSTR NPN SI BD 233	1
Q109	J707386P1	TSTR NPN SI BCW 32	1
Q201	J707435P1	TSTR PNP SI BC 369	1
Q202	J707386P1	TSTR NPN SI BCW 32	1
Q203	J707432P1	TSTR PNP SI BCX 18	1
Q204	J707386P1	TSTR NPN SI BCW 32	1
Q301	J706011P2	TSTR NPN SI BFR 91A	1
Q302	J708315P1	TSTR JFET SI 2N5245	1
Q401	J707817P1	TSTR JFET SI J 309	1
Q402	J707817P1	TSTR JFET SI J 309	1
Q403	J707419P1	TSTR JFET SI BF511	1
Q404	J708418P1	TSTR NPN SI BFS 20	1
Q405	J708418P1	TSTR NPN SI BFS 20	1
Q406	J708418P1	TSTR NPN SI BFS 20	1
Q407	J707386P1	TSTR NPN SI BCW 32	1
Q408	J707387P1	TSTR PNP SI BCW 30	1
Q501	J707817P1	TSTR JFET SI J 309	1
Q502	J707388P1	TSTR NPN SI BFR 53	1
Q601	J707817P1	TSTR JFET SI J 309	1
Q602	J707388P1	TSTR NPN SI BFR 53	1
Q603	J708318P1	TSTR PNP SI BFT 92	1
Q604	J707433P1	TSTR MFET SI BF 989	1
Q605	J707386P1	TSTR NPN SI BCW 32	1
Q612	J707386P1	TSTR NPN SI BCW 32	1
Q613	J707386P1	TSTR NPN SI BCW 32	1
Q701	J707419P1	TSTR JFET SI BF511	1
Q702	J707387P1	TSTR PNP SI BCW 30	1
R000	J707385P332	RES MFLM 1/8W 3K3 5%	1
R100	J707385P122	RES MFLM 1/8W 1K2 5%	1
R101	J707385P472	RES MFLM 1/8W 4K7 5%	1
R102	J707385P270	RES MFLM 1/8W 27R 5%	1
R103	J707385P470	RES MFLM 1/8W 47R 5%	1
R104	J707385P102	RES MFLM 1/8W 1K0 5%	1
R105	J707385P182	RES MFLM 1/8W 1K8 5%	1
R106	J707385P470	RES MFLM 1/8W 47R 5%	1
R107	J707385P680	RES MFLM 1/8W 68R 5%	1
R108	J707385P560	RES MFLM 1/8W 56R 5%	1
R109	J707385P100	RES MFLM 1/8W 10R 5%	1
R110	J707385P100	RES MFLM 1/8W 10R 5%	1
R111	J707385P100	RES MFLM 1/8W 10R 5%	1
R112	J707385P947	RES MFLM 1/8W 4R7 20%	1
R113	J707385P100	RES MFLM 1/8W 10R 5%	1
R114	J707385P947	RES MFLM 1/8W 4R7 20%	1
R115	J707385P100	RES MFLM 1/8W 10R 5% G1/G2/G3	1
R116	J707385P220	RES MFLM 1/8W 22R 5% G1/G2/G3	1
R117	J707385P220	RES MFLM 1/8W 22R 5% G1/G2/G3	1
R118	J707385P473	RES MFLM 1/8W 47K 5%	1
R119	J707385P820	RES MFLM 1/8W 82R 5%	1
R120	J707385P820	RES MFLM 1/8W 82R 5%	1

PARTS LIST FOR RADIO FREQUENCY BOARD RF611X : M905761GX BD. REV.2/L

Pos	Code No.	Description	Qt
R121	J707385P333	RES MFLM 1/8W 33K 5%	1
R122	J707385P221	RES MFLM 1/8W 220R 5%	1
R123	J707385P221	RES MFLM 1/8W 220R 5%	1
R132	J708538P9	RES VAR CERM 200K 20%	1
R133	J708538P4	RES VAR CERM 5K0 20%	1
R134	J707385P100	RES MFLM 1/8W 10R 5%	1
R135	J706147P2	RES THERM PTC 80R 25%	1
R136	J707385P682	RES MFLM 1/8W 6K8 5%	1
R137	J707385P223	RES MFLM 1/8W 22K 5%	1
R138	J707385P472	RES MFLM 1/8W 4K7 5%	1
R139	J707385P472	RES MFLM 1/8W 4K7 5%	1
R140	J707385P333	RES MFLM 1/8W 33K 5%	1
R141	J707385P333	RES MFLM 1/8W 33K 5%	1
R142	J707385P104	RES MFLM 1/8W 100K 5%	1
R143	J707385P222	RES MFLM 1/8W 2K2 5%	1
R144	J707385P222	RES MFLM 1/8W 2K2 5%	1
R145	J707385P223	RES MFLM 1/8W 22K 5%	1
R146	J707385P104	RES MFLM 1/8W 100K 5%	1
R147	J707385P104	RES MFLM 1/8W 100K 5%	1
R148	J707385P123	RES MFLM 1/8W 12K 5%	1
R149	J707385P472	RES MFLM 1/8W 4K7 5%	1
R150	J707385P391	RES MFLM 1/8W 390R 5%	1
R151	J707385P683	RES MFLM 1/8W 68K 5%	1
R152	J707385P104	RES MFLM 1/8W 100K 5%	1
R153	J707385P472	RES MFLM 1/8W 4K7 5%	1
R154	J707385P274	RES MFLM 1/8W 270K 5%	1
R155	J707385P682	RES MFLM 1/8W 6K8 5%	1
R156	J707385P102	RES MFLM 1/8W 1K0 5%	1
R157	J707385P392	RES MFLM 1/8W 3K9 5%	1
R158	J707385P472	RES MFLM 1/8W 4K7 5%	1
R159	J707385P104	RES MFLM 1/8W 100K 5% G1/G2/G3	1
R159	J707385P102	RES MFILM 1/8W 1K0 5% G4/G5/G6	1
R160	J709725P1	RES THERM PTC 1K0 G1/G2/G3	1
R161	J707385P331	RES MFLM 1/8W 330R 5% G1/G2/G3	1
R162	J707385P331	RES MFLM 1/8W 330R 5% G1/G2/G3	1
R163	J707385P561	RES MFLM 1/8W 560R 5%	1
R164	J707385P471	RES MFLM 1/8W 470R 5%	1
R165	J707385P391	RES MFLM 1/8W 390R 5% G1/G2/G3	1
R201	J707385P561	RES MFLM 1/8W 560R 5%	1
R202	J707385P271	RES MFLM 1/8W 270R 5%	1
R203	J707385P153	RES MFLM 1/8W 15K 5%	1
R204	J707385P153	RES MFLM 1/8W 15K 5%	1
R205	J707385P472	RES MFLM 1/8W 4K7 5%	1
R206	J707385P272	RES MFLM 1/8W 2K7 5%	1
R207	J707385P563	RES MFLM 1/8W 56K 5%	1
R208	J707385P563	RES MFLM 1/8W 56K 5%	1
R209	J707385P271	RES MFLM 1/8W 270R 5%	1
R301	J707385P471	RES MFLM 1/8W 470R 5%	1
R302	J707385P391	RES MFLM 1/8W 390R 5%	1
R303	J707385P104	RES MFLM 1/8W 100K 5%	1
R304	J707385P104	RES MFLM 1/8W 100K 5%	1
R305	J707385P900	RES MFLM 1/8W OR JUMPER	1
R306	J707385P222	RES MFLM 1/8W 2K2 5%	1
R307	J707385P681	RES MFLM 1/8W 680R 5%	1
R308	J707385P470	RES MFLM 1/8W 47R 5%	1
R309	J707385P270	RES MFLM 1/8W 27R 5%	1
R310	J707385P104	RES MFLM 1/8W 100K 5%	1
R311	J707385P560	RES MFLM 1/8W 56R 5%	1
R312	J707385P104	RES MFLM 1/8W 100K 5%	1
R314	J707385P104	RES MFLM 1/8W 100K 5%	1
R316	J707385P104	RES MFLM 1/8W 100K 5%	1
R317	J707385P182	RES MFLM 1/8W 1K8 5%	1
R318	J707385P100	RES MFLM 1/8W 10R 5%	1
R319	J707385P101	RES MFLM 1/8W 100R 5%	1
R321	J707385P270	RES MFLM 1/8W 27R 5%	1
R322	J707385P391	RES MFLM 1/8W 390R 5%	1
R323	J707385P104	RES MFLM 1/8W 100K 5%	1
R324	J707385P104	RES MFLM 1/8W 100K 5%	1
R325	J707385P100	RES MFLM 1/8W 10R 5%	1
R326	J707385P392	RES MFLM 1/8W 3K9 5%	1
R327	J707385P102	RES MFLM 1/8W 1K0 5%	1
R401	J707385P560	RES MFLM 1/8W 56R 5%	1
R402	J707385P100	RES MFLM 1/8W 10R 5%	1
R403	J707385P332	RES MFLM 1/8W 3K3 5%	1
R405	J707385P100	RES MFLM 1/8W 10R 5%	1
R406	J707385P820	RES MFLM 1/8W 82R 5%	1
R407	J707385P470	RES MFLM 1/8W 47R 5%	1
R408	J707385P470	RES MFLM 1/8W 47R 5%	1
R410	J707385P272	RES MFLM 1/8W 2K7 5%	1
R411	J707385P682	RES MFLM 1/8W 6K8 5%	1
R412	J707385P272	RES MFLM 1/8W 2K7 5%	1
R413	J707385P471	RES MFLM 1/8W 470R 5%	1
R414	J707385P220	RES MFLM 1/8W 22R 5%	1
R415	J707385P222	RES MFLM 1/8W 2K2 5%	1
R416	J707385P562	RES MFLM 1/8W 5K6 5%	1
R417	J707385P103	RES MFLM 1/8W 10K 5%	1
R418	J707385P153	RES MFLM 1/8W 15K 5%	1
R419	J707385P182	RES MFLM 1/8W 1K8 5%	1
R420	J707385P182	RES MFLM 1/8W 1K8 5%	1
R421	J707385P182	RES MFLM 1/8W 1K8 5%	1
R422	J707385P473	RES MFLM 1/8W 47K 5%	1
R423	J707385P153	RES MFLM 1/8W 15K 5%	1
R424	J708538P5	RES VAR CERM 10K 20%	1
R425	J707385P272	RES MFLM 1/8W 2K7 5%	1
R426	J707385P333	RES MFLM 1/8W 33K 5% G1/G4	1
R426	J707385P473	RES MFLM 1/8W 47K 5% G2/G3/G5/G6	1
R427	J707385P473	RES MFLM 1/8W 47K 5% G1/G3/G4/G6	1
R427	J707385P393	RES MFLM 1/8W 47K 5% G2/G5	1
R428	J707385P393	RES MFLM 1/8W 39K 5% G1/G4	1
R428	J707385P563	RES MFLM 1/8W 56K 5% G2/G3/G5/G6	1
R429	J707385P104	RES MFLM 1/8W 100K 5%	1
R430	J707385P274	RES MFLM 1/8W 270K 5% G1/G2/G4/G5	1
R430	J707385P334	RES MFLM 1/8W 330K 5% G3/G6	1
R431	J707385P473	RES MFLM 1/8W 47K 5%	1
R432	J707385P473	RES MFLM 1/8W 47K 5%	1
R433	J707385P271	RES MFLM 1/8W 270R 5%	1
R434	J707385P102	RES MFLM 1/8W 1K0 5%	1
R435	J706147P3	RES THERM PTC 250R 25%	1

Pos	Code No.	Description	Qt
R436	J707385P392	RES MFLM 1/8W 3K9 5%	1
R437	J707406P7	RES THERM NTC 220R 10%	1
R438	J707385P222	RES MFLM 1/8W 2K2 5%	1
R439	J707385P392	RES MFLM 1/8W 3K9 5%	1
R440	J707385P392	RES MFLM 1/8W 3K9 5%	1
R441	J707385P101	RES MFLM 1/8W 100R 5%	1
R442	J708538P6	RES VAR CERM 20K 20%	1
R444	J707385P473	RES MFLM 1/8W 47K 5%	1
R445	J707385P273	RES MFLM 1/8W 27K 5%	1
R446	J707385P224	RES MFLM 1/8W 220K 5%	1
R447	J707385P392	RES MFLM 1/8W 3K9 5%	1
R448	J707385P101	RES MFLM 1/8W 100R 5%	1
R449	J707385P470	RES MFLM 1/8W 47R 5%	1
R450	J707385P103	RES MFLM 1/8W 10K 5%	1
R451	J707385P332	RES MFLM 1/8W 3K3 5%	1
R452	J707385P332	RES MFLM 1/8W 3K3 5%	1
R501	J707385P122	RES MFLM 1/8W 1K2 5%	1
R502	J707385P122	RES MFLM 1/8W 1K2 5%	1
R503	J707385P122	RES MFLM 1/8W 1K2 5%	1
R504	J707385P104	RES MFLM 1/8W 100K 5%	1
R505	J707385P104	RES MFLM 1/8W 100K 5%	1
R506	J707385P104	RES MFLM 1/8W 100K 5%	1
R508	J707385P103	RES MFLM 1/8W 10K 5%	1
R509	J707385P910	RES MFLM 1/8W 1R0 20%	1
R510	J707385P332	RES MFLM 1/8W 3K3 5%	1
R512	J707385P561	RES MFLM 1/8W 560R 5%	1
R513	J707385P183	RES MFLM 1/8W 18K 5%	1
R514	J707385P472	RES MFLM 1/8W 4K7 5%	1
R515	J707385P470	RES MFLM 1/8W 47R 5%	1
R517	J707385P101	RES MFLM 1/8W 100R 5%	1
R518	J707385P470	RES MFLM 1/8W 47R 5%	1
R519	J707385P221	RES MFLM 1/8W 220R 5%	1
R529	J707385P392	RES MFLM 1/8W 3K9 5%	1
R601	J707385P122	RES MFLM 1/8W 1K2 5%	1
R602	J707385P122	RES MFLM 1/8W 1K2 5%	1
R603	J707385P122	RES MFLM 1/8W 1K2 5%	1
R604	J707385P104	RES MFLM 1/8W 100K 5%	1
R605	J707385P104	RES MFLM 1/8W 100K 5%	1
R606	J707385P104	RES MFLM 1/8W 100K 5%	1
R607	J707385P561	RES MFLM 1/8W 560R 5%	1
R608	J707385P221	RES MFLM 1/8W 220R 5%	1
R609	J707385P472	RES MFLM 1/8W 4K7 5%	1
R610	J707385P183	RES MFLM 1/8W 18K 5%	1
R611	J707385P271	RES MFLM 1/8W 270R 5%	1
R612	J707385P222	RES MFLM 1/8W 2K2 5%	1
R613	J707385P101	RES MFLM 1/8W 100R 5%	1
R614	J707385P561	RES MFLM 1/8W 560R 5%	1
R615	J707385P272	RES MFLM 1/8W 2K7 5%	1
R616	J707385P470	RES MFLM 1/8W 47R 5%	1
R617	J707385P683	RES MFLM 1/8W 68K 5%	1
R618	J707385P683	RES MFLM 1/8W 68K 5%	1
R619	J707385P104	RES MFLM 1/8W 100K 5%	1
R620	J707385P271	RES MFLM 1/8W 270R 5%	1
R621	J707385P561	RES MFLM 1/8W 560R 5%	1
R622	J707385P102	RES MFLM 1/8W 1K0 5%	1
R623	J707385P224	RES MFLM 1/8W 220K 5%	1
R624	J707385P223	RES MFLM 1/8W 22K 5%	1
R625	J707385P470	RES MFLM 1/8W 47R 5%	1
R626	J707385P100	RES MFLM 1/8W 10R 5%	1

Pos	Code No.	Description	Qt
R627	J707385P103	RES MFLM 1/8W 10K 5%	1
R628	J707385P224	RES MFLM 1/8W 220K 5%	1
R629	J707385P393	RES MFLM 1/8W 39K 5%	1
R630	J707385P100	RES MFLM 1/8W 10R 5%	1
R631	J707385P824	RES MFLM 1/8W 820K 5%	1
R632	J707385P223	RES MFLM 1/8W 22K 5%	1
R633	J707385P824	RES MFLM 1/8W 820K 5%	1
R634	J707385P123	RES MFLM 1/8W 12K 5%	1
R635	J707385P102	RES MFLM 1/8W 1K0 5%	1
R636	J707385P332	RES MFLM 1/8W 3K3 5%	1
R637	J707385P181	RES MFLM 1/8W 180R 5%	1
R638	J707385P154	RES MFLM 1/8W 150K 5%	1
R639	J707385P682	RES MFLM 1/8W 6K8 5%	1
R640	J707385P105	RES MFLM 1/8W 1M0 10%	1
R641	J707385P184	RES MFLM 1/8W 180K 5%	1
R642	J707385P184	RES MFLM 1/8W 180K 5%	1
R643	J707385P105	RES MFLM 1/8W 1M0 10%	1
R644	J707385P333	RES MFLM 1/8W 33K 5%	1
R645	J707385P103	RES MFLM 1/8W 10K 5%	1
R646	J707385P682	RES MFLM 1/8W 6K8 5%	1
R647	J707385P333	RES MFLM 1/8W 33K 5%	1
R648	J707385P823	RES MFLM 1/8W 82K 5%	1
R649	J707385P393	RES MFLM 1/8W 39K 5%	1
R650	J707385P393	RES MFLM 1/8W 39K 5%	1
R651	J707385P333	RES MFLM 1/8W 33K 5%	1
R652	J707385P222	RES MFLM 1/8W 2K2 5%	1
R653	J707385P333	RES MFLM 1/8W 33K 5%	1
R654	J707385P562	RES MFLM 1/8W 5K6 5%	1
R655	J707385P183	RES MFLM 1/8W 18K 5%	1
R656	J707385P393	RES MFLM 1/8W 39K 5%	1
R657	J707385P823	RES MFLM 1/8W 82K 5%	1
R658	J707385P154	RES MFLM 1/8W 150K 5%	1
R659	J707385P103	RES MFLM 1/8W 10K 5%	1
R660	J707385P333	RES MFLM 1/8W 33K 5%	1
R661	J707385P393	RES MFLM 1/8W 39K 5%	1
R662	J707385P473	RES MFLM 1/8W 47K 5%	1
R663	J708538P6	RES VAR CERM 20K 20%	1
R664	J707385P563	RES MFLM 1/8W 56K 5%	1
R665	J707385P224	RES MFLM 1/8W 220K 5%	1
R666	J707385P124	RES MFLM 1/8W 120K 5%	1
R667	J707385P124	RES MFLM 1/8W 120K 5%	1
R668	J707385P122	RES MFLM 1/8W 1K2 5%	1
R669	J707385P221	RES MFLM 1/8W 220R 5%	1
R670	J707385P103	RES MFLM 1/8W 10K 5%	1
R671	J707385P562	RES MFLM 1/8W 5K6 5%	1
R672	J707385P822	RES MFLM 1/8W 8K2 5%	1
R673	J707385P822	RES MFLM 1/8W 8K2 5%	1
R674	J707385P101	RES MFLM 1/8W 100R 5%	1
R675	J708538P5	RES VAR CERM 10K 20%	1
R676	J707385P102	RES MFLM 1/8W 1K0 5%	1
R677	J708538P5	RES VAR CERM 10K 20%	1
R678	J707385P470	RES MFLM 1/8W 47R 5%	1
R679	J707385P821	RES MFLM 1/8W 820R 5%	1
R680	J708538P6	RES VAR CERM 20K 20%	1
R681	J707385P223	RES MFLM 1/8W 22K 5%	1
R682	J707385P152	RES MFLM 1/8W 1K5 5%	1
R683	J707385P223	RES MFLM 1/8W 22K 5%	1
R684	J707385P183	RES MFLM 1/8W 18K 5%	1
R685	J707385P183	RES MFLM 1/8W 18K 5%	1

PARTS LIST FOR RADIO FREQUENCY BOARD RF611X : M905761GX BD. REV.2/L

Pos	Code No.	Description	Qt
R686	J707385P103	RES MFLM 1/8W 10K 5%	1
R687	J707385P103	RES MFLM 1/8W 10K 5%	1
R689	J707385P105	RES MFLM 1/8W 1M0 10%	1
R690	J707385P124	RES MFLM 1/8W 120K 5%	1
R691	J707385P273	RES MFLM 1/8W 27K 5%	1
R692	J707385P223	RES MFLM 1/8W 22K 5%	1
R693	J707385P105	RES MFLM 1/8W 1M0 10%	1
R694	J707385P223	RES MFLM 1/8W 22K 5%	1
R695	J707385P105	RES MFLM 1/8W 1M0 10%	1
R696	J707385P223	RES MFLM 1/8W 22K 5%	1
R697	J707385P105	RES MFLM 1/8W 1M0 10%	1
R698	J707385P103	RES MFLM 1/8W 10K 5%	1
R701	J708666P1	RES THERM NTC 5K 2%	1
R702	A701250P413	RES MFLM 1/4W 133K 1%	1
R703	A701250P213	RES MFLM 1/4W 1K33 1%	1
R704	A701250P325	RES MFLM 1/4W 17K8 1%	1
R705	J708666P2	RES THERM NTC 20K 2%	1
R706	J708666P2	RES THERM NTC 20K 2%	1
R707	J707385P104	RES MFLM 1/8W 100K 5%	1
R708	J707385P105	RES MFLM 1/8W 1M0 10%	1
R709	J707385P181	RES MFLM 1/8W 180R 5%	1
R710	J707385P101	RES MFLM 1/8W 100R 5%	1
R711	J707385P223	RES MFLM 1/8W 22K 5%	1
R712	J707385P154	RES MFLM 1/8W 150K 5%	1
R713	J707385P821	RES MFLM 1/8W 820R 5%	1
R714	J707385P104	RES MFLM 1/8W 100K 5%	1
U100	J708165P2	IC LIN OP-AMP 324	1
U201	J708333P1	IC LIN VR FIX 4785	1
U401	J707449P1	IC LIN IF-AMP 3357	1
U402	M905766G1	INT CKT SQ 4002 G1/G4	1
U402	M905766G2	INT CKT SQ 4003 G3/G6	1
U402	M905766G3	INT CKT SQ 4004 G2/G5	1
U601	J707859P1	IC LIN OP-AMP 204	1
U602	J707859P1	IC LIN OP-AMP 204	1
U603	J707859P1	IC LIN OP-AMP 204	1
U604	J707859P1	IC LIN OP-AMP 204	1
U606	J707243P1	IC DIG REG 4094	1
U607	J707374P3	IC PLL PRESC 12017	1
U608	B800902P1	IC PLL SYN CUSTOM DES	1
U609	J707859P1	IC LIN OP-AMP 204	1
U610	J708503P2	IC LIN CMPAR LM 339	1
U615	J708621P2	CPLR OPTO PC 827	1
U616	J708503P2	IC LIN CMPAR LM 339	1
W001	A700184P1	RES WIRE JMPR OR JUMPER	1
W003	J707256P1	COIL FIX	1
W004	J707256P1	COIL FIX	1
W005	J708717P1	STRAP	1
W006	J709241P1	STRAP	1
W007	J709241P1	STRAP	1
Y401	J708426P1	CRYSTAL UNIT 44.5450MHZ	1
Y701	J707567P19	CRYSTAL UNIT 7.4000MHZ	1
Z401	J708330P1	FLTR CRY 45.0 +/-7.5KHz G1/G4	1
Z401	J708330P2	FLTR CRY 45.0 +/-6.0KHz G2/G5	1
Z401	J708330P3	FLTR CRY 45.0 +/-3.75KHz G3/G6	1
Z402	J707446P1	FLTR CER 455K +/-10KHz G1/G4	1
Z402	J707446P3	FLTR CER 455K +/-7.5KHz G2/G5	1
Z402	J707446P4	FLTR CER 455K +/-4-5KHz G3/G6	1
Z403	J707446P1	FLTR CER 455K +/-10KHz G1/G4	1
Z403	J707446P3	FLTR CER 455K +/-7.5KHz G2/G5	1

Pos	Code No.	Description	Qt
Z403	J707446P4	FLTR CER 455K +/-4.5KHz G3/G6	1
	M905762P1R2	BD PW G1/G2/G3	1
	M905762P2R2	BD PW G4/G5/G6	1
		NON REFERENCED ITEMS:	
	J708966G1	HEAT SINK MODF	1
	K805569G2	SHIELD METALLIZED	1
	J706281P6	CORE SCREW FERR U 10	8
	J708561P3	COIL FIXED	1
	J708561P3	COIL FIXED	1
	J708561P3	COIL FIXED	1
	J706804P3	WASH INS CRYS FOR HC-45/U	2
	J706804P2	WASH INS CRYS FOR HC-18/U	2

PARTS LIST FOR RADIO FREQUENCY BOARD RF611X : M905761GX BD. REV. 2/K

Pos	Code No.	Description	Qt
		COMPONENTS REVISED SINCE LAST EDITION ARE MARKED *	
	M905761G1	RF6112S25 CH. SPAC. 25kHz/25W OUT	
	M905761G2	RF6113S25 CH. SPAC. 20kHz/25W OUT	
	M905761G3	RF6114S25 CH. SPAC. 12.5kHz/25W OUT	
	M905761G4	RF6112S6 CH. SPAC. 25kHz/6W OUT	
	M905761G5	RF6113S6 CH. SPAC. 20kHz/6W OUT	
	M905761G6	RF6114S6 CH. SPAC. 12.5kHz/6W OUT	
C000	21R13741A33	CAP CER CL2 3N3 10%	1
C001	J707809P5	CAP CER NP0 2P2 .25P G1	1
C100	J707809P10	CAP CER NP0 5P6 .25P	1
C101	21R13741M25	CAP CER CL2 680P 10%	1
C102	J707809P8	CAP CER NP0 3P9 .25P	1
C103	J707809P27	CAP CER NP0 150P 5%	1
C104	J707809P19	CAP CER NP0 33P 5%	1
C105	J707809P13	CAP CER NP0 10P 5%	1
C106	21R13741M45	CAP CER CL2 10N 10%	1
C107	J707809P25	CAP CER NP0 100P 5%	1
C108	J707809P22	CAP CER NP0 56P 5%	1
C109	J707809P17	CAP CER NP0 22P 5%	1
C110	21R13741M45	CAP CER CL2 10N 10%	1
C111	J707809P25	CAP CER NP0 100P 5%	1
C112	21R13741M25	CAP CER CL2 680P 10%	1
C113	J707809P21	CAP CER NP0 47P 5%	1
C114	J707809P25	CAP CER NP0 100P 5%	1
C115	J707809P24	CAP CER NP0 82P 5%	1
C116	21R13741M45	CAP CER CL2 10N 10%	1
C117	J707809P26	CAP CER NP0 120P 5%	1
C118	21R13741M45	CAP CER CL2 10N 10%	1
C119	21R13741M25	CAP CER CL2 680P 10%	1
C120	J707809P23	CAP CER NP0 68P 5%	1
C121	J707809P23	CAP CER NP0 68P 5%	1
C122	A700006P34	CAP MICA 100P 5%	1
C123	21R13741M45	CAP CER CL2 10N 10%	1
C124	J707809P26	CAP CER NP0 120P 5%	1
C125	21R13741M25	CAP CER CL2 680P 10%	1
C126	21R13741M45	CAP CER CL2 10N 10%	1
C127	J707353P6	CAP ELECT 4U7 25V	1
C128	J707809P27	CAP CER NP0 150P 5%	1
C129	J707809P27	CAP CER NP0 150P 5%	1
C130	A700006P32	CAP MICA 82P 5% G1/G2/G3	1
C130	A700006P30	CAP MICA 68P 5% G4/G5/G6	1
C131	A700006P41	CAP MICA 180P 5% G1/G2/G3	1
C131	A700006P32	CAP MICA 82P 5% G4/G5/G6	1
C132	A700006P41	CAP MICA 180P 5% G1/G2/G3	1
C133	21R13741C17	CAP CER CL2 100N 10% G1/G2/G3	1
C134	J707809P26	CAP CER NP0 120P 5% G1/G2/G3	1
C135	21R13741M25	CAP CER CL2 680P 10%	1
C136	A700006P26	CAP MICA 47P 5% G1/G2/G3	1
C137	A700006P34	CAP MICA 100P 5% G1/G2/G3	1
C138	J707809P27	CAP CER NP0 150P 5%	1
C139	J707809P27	CAP CER NP0 150P 5%	1
C140	J707809P27	CAP CER NP0 150P 5%	1
C141	J707809P27	CAP CER NP0 150P 5%	1
C142	A700006P6	CAP MICA 10P 5%	1
C143	A700006P22	CAP MICA 36P 5%	1
C144	A700006P22	CAP MICA 36P 5%	1
C145	A700006P11	CAP MICA 15P 5%	1
C146	21R13741M25	CAP CER CL2 680P 10%	1
C147	21R13741M25	CAP CER CL2 680P 10%	1
C148	21R13741M25	CAP CER CL2 680P 10%	1
C149	21R13741M25	CAP CER CL2 680P 10%	1
C150	J707809P1	CAP CER NP0 1P0 .25P	1
C151	J707809P1	CAP CER NP0 1P0 .25P	1
C152	21R13741M25	CAP CER CL2 680P 10%	1
C153	21R13741M25	CAP CER CL2 680P 10%	1
C154	21R13741M25	CAP CER CL2 680P 10%	1
C155	21R13741M25	CAP CER CL2 680P 10%	1
C156	J707353P3	CAP ELECT 0U47 50V	1
C157	21R13741M25	CAP CER CL2 680P 10%	1
C158	21R13741M25	CAP CER CL2 680P 10%	1
C159	21R13741M45	CAP CER CL2 10N 10%	1
C160	21R13741M25	CAP CER CL2 680P 10%	1
C161	21R13741M45	CAP CER CL2 10N 10%	1
C162	21R13741M45	CAP CER CL2 10N 10%	1
C163	21R13741C05	CAP CER CL2 33N 10%	1
C164	21R13741M25	CAP CER CL2 680P 10%	1
C165	21R13741M25	CAP CER CL2 680P 10%	1
C166	21R13741M25	CAP CER CL2 680P 10%	1
C167	A701413P34	CAP MICA 100P 5% G1/G2/G3	1
C167	A701413P38	CAP MICA 150P 5% G4/G5/G6	1
C168	A700006P28	CAP MICA 56P 5% G1/G2/G3	1
C168	A700006P32	CAP MICA 82P 5% G4/G5/G6	1
C169	A700006P9	CAP MICA 13P 5% G1/G2/G3	1
C169	A700006P22	CAP MICA 36P 5% G4/G5/G6	1
C170	J707809P8	CAP CER NP0 3P9 .25P G1/G2/G3	1
C170	J707809P13	CAP CER NP0 10P 5%	1
C172	21R13741M45	CAP CER CL2 10N 10%	1

Pos	Code No.	Description	Qt
C173	21R13740A71	CAP CER NPO 470P 5%	1
C174	21R13741A33	CAP CER CL2 3N3 10%	1
C175	21R13741M21	CAP CER CL2 1N 10%	1
C176	21R13741M45	CAP CER CL2 10N 10%	1
C201	21R13741C17	CAP CER CL2 100N 10%	1
C202	J707444P8	CAP TA SOL 22U 16V	1
C203	J707444P6	CAP TA SOL 4U7 35V	1
C204	21R13740A71	CAP CER NPO 470P 5%	1
C205	J707412P9	CAP PYES 100N 10%	1
C301	21R13740A07	CAP CER NPO 1P5 .25P	1
C302	21R13741M21	CAP CER CL2 1N 10%	1
C304	21R13740A13	CAP CER NPO 3P9 .25P	1
C305	21R13740A33	CAP CER NPO 15P 5%	1
C306	J707483P1	CAP PHEN 0P47 5%	1
C307	21R13741M21	CAP CER CL2 1N 10% G1/G2/G3	1
C307	21R13741M25	CAP CER CL2 680P 10% G4/G5/G6	1
C309	21R13740A33	CAP CER NPO 15P 5%	1
C310	21R13741M21	CAP CER CL2 1N 10%	1
C311	21R13741M21	CAP CER CL2 1N 10%	1
C312	21R13740C19	CAP CER NPO 1N2 5%	1
C314	21R13740A11	CAP CER NPO 2P2 .25P	1
C315	21R13741M21	CAP CER CL2 1N 10%	1
C316	21R13740A11	CAP CER NPO 2P2 .25P	1
C317	J707444P2	CAP TA SOL 0U22 35V	1
C318	21R13741M21	CAP CER CL2 1N 10%	1
C319	21R13740A33	CAP CER NPO 15P 5%	1
C320	21R13741M21	CAP CER CL2 1N 10%	1
C322	J707483P7	CAP PHEN 1P00 5%	1
C323	J707483P5	CAP PHEN 0P68 5%	1
C324	J707483P4	CAP PHEN 0P56 5%	1
C325	21R13741M21	CAP CER CL2 1N 10%	1
C326	21R13740A33	CAP CER NPO 15P 5%	1
C328	21R13740A33	CAP CER NPO 15P 5%	1
C331	21R13740A33	CAP CER NPO 15P 5%	1
C332	21R13740A33	CAP CER NPO 15P 5%	1
C333	J707483P13	CAP PHEN 0P22 10%	1
C335	21R13741M21	CAP CER CL2 1N 10%	1
C338	21R13740A24	CAP CER NPO 6P8 .25P	1
C339	21R13741M21	CAP CER CL2 1N 10%	1
C340	21R13741A33	CAP CER CL2 3N3 10%	1
C345	21R13740A41	CAP CER NPO 33P 5%	1
C347	21R13741M21	CAP CER CL2 1N 10%	1
C348	21R13741M21	CAP CER CL2 1N 10%	1
C350	21R13740A07	CAP CER NPO 1P5 .25P	1
C351	21R13740A29	CAP CER NPO 10P 5%	1
C353	J707483P2	CAP PHEN 0P33 5%	1
C354	21R13740A29	CAP CER NPO 10P 5%	1
C355	J707483P8	CAP PHEN 1P20 5%	1
C356	21R13741M21	CAP CER CL2 1N 10%	1
C357	21R13740A03	CAP CER NPO 1P0 .25P	1
C358	21R13740A03	CAP CER NPO 1P0 .25P	1
C359	21R13740A03	CAP CER NPO 1P0 .25P	1
C401	21R13741A33	CAP CER CL2 3N3 10%	1
C402	21R13741A33	CAP CER CL2 3N3 10%	1
C403	21R13741A33	CAP CER CL2 3N3 10%	1
C404	21R13740A19	CAP CER NPO 4P7 .25P	1
C405	21R13741C17	CAP CER CL2 100N 10%	1

Pos	Code No.	Description	Qt
C406	21R13740A21	CAP CER NPO 5P6 .25P	1
C407	21R13740A19	CAP CER NPO 4P7 .25P	1
C408	21R13741M21	CAP CER CL2 1N 10%	1
C409	21R13741A33	CAP CER CL2 3N3 10%	1
C410	J707444P8	CAP TA SOL 22U 16V	1
C411	21R13741C17	CAP CER CL2 100N 10%	1
C412	21R13741C17	CAP CER CL2 100N 10%	1
C413	21R13740A33	CAP CER NPO 15P 5%	1
C414	21R13741A33	CAP CER CL2 3N3 10%	1
C415	21R13741A33	CAP CER CL2 3N3 10%	1
C416	J708702P16	CAP CER N750 18P 5%	1
C417	21R13740A49	CAP CER NPO 56P 5%	1
C418	21R13741M45	CAP CER CL2 10N 10%	1
C419	21R13741C17	CAP CER CL2 100N 10%	1
C420	21R13741M45	CAP CER CL2 10N 10%	1
C421	21R13741C17	CAP CER CL2 100N 10%	1
C422	21R13741C17	CAP CER CL2 100N 10%	1
C423	21R13740A29	CAP CER NPO 10P 5%	1
C424	21R13741A33	CAP CER CL2 3N3 10%	1
C425	J707412P13	CAP PYES 470N 10%	1
C426	21R13740C25	CAP CER NPO 2N2 5%	1
C427	21R13740A67	CAP CER NPO 330P 5%	1
C428	21R13740A65	CAP CER NPO 270P 5% G1/G2/G4/G5	1
C428	21R13740A63	CAP CER NPO 220P 5% G3/G6	1
C429	21R13741M45	CAP CER CL2 10N 10%	1
C430	J707444P8	CAP TA SOL 22U 16V	1
C431	J707444P8	CAP TA SOL 22U 16V	1
C432	21R13741C17	CAP CER CL2 100N 10%	1
C433	21R13741C17	CAP CER CL2 100N 10%	1
C434	21R13741A33	CAP CER CL2 3N3 10%	1
C435	21R13740A03	CAP CER NPO 1P0 .25P	1
C436	21R13741C17	CAP CER CL2 100N 10%	1
C501	J707412P11	CAP PYES 220N 10%	1
C502	J707412P11	CAP PYES 220N 10%	1
C503	J707412P11	CAP PYES 220N 10%	1
C504	A700235P7	CAP CER N150 3P3 .25P	1
C505	A700235P4	CAP CER N150 1P8 .25P	1
C506	A700235P12	CAP CER N150 8P2 .25P	1
C507	A700235P14	CAP CER N150 12P 5%	1
C508	A700235P32	CAP CER N150 11P 5%	1
C509	A700235P10	CAP CER N150 5P6 .25P	1
C510	A700235P16	CAP CER N150 18P 5%	1
C512	A700235P2	CAP CER NPO 1P2 .25P	1
C513	21R13741M13	CAP CER CL2 470P 10%	1
C515	21R13740A27	CAP CER NPO 8P2 .25P	1
C516	21R13740A24	CAP CER NPO 6P8 .25P	1
C517	J707444P6	CAP TA SOL 4U7 35V	1
C518	21R13740A07	CAP CER NPO 1P5 .25P	1
C519	21R13741M13	CAP CER CL2 470P 10%	1
C520	21R13740A11	CAP CER NPO 2P2 .25P	1
C521	21R13740A31	CAP CER NPO 12P 5%	1
C522	21R13741M13	CAP CER CL2 470P 10%	1
C523	21R13740A11	CAP CER NPO 2P2 .25P	1
C524	21R13741M13	CAP CER CL2 470P 10%	1
C525	21R13741M13	CAP CER CL2 470P 10%	1
C526	21R13741M13	CAP CER CL2 470P 10%	1
C527	21R13741M13	CAP CER CL2 470P 10%	1

PARTS LIST FOR RADIO FREQUENCY BOARD RF611X : M905761GX BD. REV. 2/K

Pos	Code No.	Description	Qt
C528	21R13741M13	CAP CER CL2 470P 10%	1
C540	21R13741M13	CAP CER CL2 470P 10%	1
C541	21R13741M13	CAP CER CL2 470P 10%	1
C542	21R13741M13	CAP CER CL2 470P 10%	1
C543	21R13741M13	CAP CER CL2 470P 10%	1
C544	21R13741M13	CAP CER CL2 470P 10%	1
C545	21R13741M13	CAP CER CL2 470P 10%	1
C601	J707412P11	CAP PYES 220N 10%	1
C602	J707412P11	CAP PYES 220N 10%	1
C603	J707412P11	CAP PYES 220N 10%	1
C604	A700235P5	CAP CER N150 2P2 .25P	1
C605	A700235P5	CAP CER N150 2P2 .25P	1
C606	A700235P8	CAP CER N150 3P9 .25P	1
C607	A700235P10	CAP CER N150 5P6 .25P	1
C608	A700235P11	CAP CER N150 6P8 .25P	1
C609	A700235P36	CAP CER N150 7P5 .25P	1
C610	A700235P12	CAP CER N150 8P2 .25P	1
C611	21R13740A15	CAP CER NPO 3P3 .25P	1
C612	21R13740A19	CAP CER NPO 4P7 .25P	1
C613	J707444P6	CAP TA SOL 4U7 35V	1
C614	21R13740A03	CAP CER NPO 1P0 .25P	1
C615	21R13740A71	CAP CER NPO 470P 5%	1
C616	21R13741M13	CAP CER CL2 470P 10%	1
C617	21R13740A03	CAP CER NPO 1P0 .25P	1
C618	21R13740A21	CAP CER NPO 5P6 .25P	1.
C619	21R13741M13	CAP CER CL2 470P 10%	1
C620	21R13740A11	CAP CER NPO 2P2 .25P	1
C621	21R13741M13	CAP CER CL2 470P 10%	1
C624	21R13740A63	CAP CER NPO 220P 5%	1
C625	21R13741C17	CAP CER CL2 100N 10%	1
C626	21R13741M21	CAP CER CL2 1N 10%	1
C627	21R13741M45	CAP CER CL2 10N 10%	1
C628	21R13740C25	CAP CER NPO 2N2 5%	1
C629	21R13740A59	CAP CER NPO 150P 5%	1
C630	21R13740A63	CAP CER NPO 220P 5%	1
C631	21R13740A63	CAP CER NPO 220P 5%	1
C632	21R13741C17	CAP CER CL2 100N 10%	1
C633	J707444P17	CAP TA SOL 47U 10V	1
C634	21R13741C17	CAP CER CL2 100N 10%	1
C635	21R13741M13	CAP CER CL2 470P 10%	1
C636	J707444P17	CAP TA SOL 47U 10V	1
C637	21R13741C17	CAP CER CL2 100N 10%	1
C639	21R13741A33	CAP CER CL2 3N3 10%	1
C640	J707412P9	CAP PYES 100N 10%	1
C641	J707412P13	CAP PYES 470N 10%	1
C642	J707412P13	CAP PYES 470N 10%	1
C643	21R13741C09	CAP CER CL2 47N 10%	1
C644	J707436P6	CAP CER NPO 2P7 .25P	1
C652	21R13741M21	CAP CER CL2 1N 10%	1
C653	J707444P6	CAP TA SOL 4U7 35V	1
C656	21R13740A71	CAP CER NPO 470P 5%	1
C657	21R13741M13	CAP CER CL2 470P 10%	1
C659	21R13741M21	CAP CER CL2 1N 10%	1
C660	21R13741A41	CAP CER CL2 6N8 5%	1
C665	21R13741M13	CAP CER CL2 470P 10%	1
C666	21R13741M13	CAP CER CL2 470P 10%	1
C667	21R13741M13	CAP CER CL2 470P 10%	1
C668	21R13740A55	CAP CER NPO 100P 5%	1
C701	21R13740A37	CAP CER NPO 22P 5%	1

Pos	Code No.	Description	Qt
C702	J708702P22	CAP CER N750 56P 5%	1
C703	21R13740A63	CAP CER NPO 220P 5%	1
C704	21R13740A29	CAP CER NPO 10P 5%	1
C705	21R13741M21	CAP CER CL2 1N 10%	1
C706	21R13741M45	CAP CER CL2 10N 10%	1
C707	21R13740A21	CAP CER NPO 5P6 .25P	1
C708	21R13741M45	CAP CER CL2 10N 10%	1
C709	21R13741M45	CAP CER CL2 10N 10%	1
D100	A700047P3	DIO SI SIG 1N6263	1
D101	J706892P1	DIO SI PIN UM 9401	1
D102	J706892P1	DIO SI PIN UM 9401	1
D103	J707390P1	DIO SI SIG BAV 74	1
D300	J707928P2	DIO SI CAP BB 809	1
D301	J707928P2	DIO SI CAP BB 809	1
D302	J707928P2	DIO SI CAP BB 809	1
D303	J707928P2	DIO SI CAP BB 809	1
D304	J707928P2	DIO SI CAP BB 809	1
D305	J707928P2	DIO SI CAP BB 809	1
D306	J707928P2	DIO SI CAP BB 809	1
D307	J707928P2	DIO SI CAP BB 809	1
D401	A700025P8	DIO SI ZENR 6V8 5% 0.4W	1
D501	J706007P1	DIO SI CAP BB 505B	1
D502	J706007P1	DIO SI CAP BB 505B	1
D503	J706007P1	DIO SI CAP BB 505B	1
D504	J707928P2	DIO SI CAP BB 809	1
D505	J707769P2	DIO SI CAP BBY 31	1
D601	J706007P1	DIO SI CAP BB 505B	1
D602	J706007P1	DIO SI CAP BB 505B	1
D603	J706007P1	DIO SI CAP BB 505B	1
D604	J706007P1	DIO SI CAP BB 505B	1
D605	J707389P1	DIO SI SIG BAV 99	1
D606	J708681P1	DIO SI SIG BAW 56	1
D607	J707390P1	DIO SI SIG BAV 74	1
D608	J707390P1	DIO SI SIG BAV 74	1
D610	J708681P1	DIO SI SIG BAW 56	1
D701	J707928P2	DIO SI CAP BB 809	1
D702	J707390P1	DIO SI SIG BAV 74	1
L100	A700024P1	COIL RF FIX 0.1UH 10%	1
L101	A700024P1	COIL RF FIX 0.1UH 10%	1
L102	K805653G5	COIL ASM 5 1/2T	1
L103	J707339G1	COIL FIX ASM	1
L104	A700024P1	COIL RF FIX 0.1UH 10%	1
L105	K805653G1	COIL ASM 1 1/2T	1
L106	J707256P2	COIL FIX	1
L107	J707339G1	COIL FIX ASM	1
L108	K805653G2	COIL ASM 2 1/2T G2/G2/G3	1
L108	K805653G6	COIL ASM 6 1/2T G4/G5/G6	1
L109	J707339G1	COIL FIX ASM	1
L110	J707256P1	COIL FIX G1/G2/G3	1
L110	J707256P2	COIL FIX G4/G5/G6	1
L112	J707339G1	COIL FIX ASM	1
L113	A700024P13	COIL RF FIX 1.0UH 10%	1
L114	K805653G2	COIL ASM 2 1/2T G1/G2/G3	1
L114	K805653G4	COIL ASM 4 1/2T G4/G5/G6	1
L115	J709287P1	CORE TOR FERR	1
L116	J709287P1	CORE TOR FERR G1/G2/G3	1
L117	K805653G4	COIL ASM 4 1/2T G1/G2/G3	1
L118	J707339G1	COIL FIX ASM G1/G2/G3	1
L119	J709603P2	COIL G1/G2/G3	1

PARTS LIST FOR RADIO FREQUENCY BOARD RF611X : M905761GX BD. REV. 2/K

Pos	Code No.	Description	Qt
L120	J707256P2	COIL FIX G1/G2/G3	1
L120	J707256P1	COIL FIX G4/G5/G6	1
L121	A700024P13	COIL RF FIX 1.0UH 10%	1
L122	A700024P25	COIL RF FIX 10UH 10%	1
L123	A700024P14	COIL RF FIX 1.2UH 10%	1
L124	K805653G5	COIL ASM 5 1/2T	1
L125	K805653G6	COIL ASM 6 1/2T	1
L126	K805653G5	COIL ASM 5 1/2T	1
L127	A700024P25	COIL RF FIX 10UH 10%	1
L128	A700024P25	COIL RF FIX 10UH 10%	1
L129	A700024P13	COIL RF FIX 1.0UH 10%	1
L130	K805653G2	COIL ASM 2 1/2T G1/G2/G3	1
L130	K805653G1	COIL ASM 1 1/2T G4/G5/G6	1
L131	K805653G3	COIL ASM 3 1/2T G1/G2/G3	1
L131	K805653G2	COIL ASM 2 1/2T G4/G5/G6	1
L301	J709099P13	COIL RF VAR 4-1/2T TAP	1
L302	J709099P13	COIL RF VAR 4-1/2T TAP	1
L303	J707486P6	COIL RF FIX 0.47UH 10%	1
L304	J709099P2	COIL RF VAR 4-1/2T TAP	1
L305	J707486P2	COIL RF FIX 3.3UH 10%	1
L306	J709099P7	COIL RF VAR 4-1/2T TAP	1
L308	J709099P6	COIL RF VAR 4-1/2T TAP	1
L310	J709099P2	COIL RF VAR 4-1/2T TAP	1
L312	J708428P2	COIL RF VAR 45 MHZ	1
L313	J709099P4	COIL RF VAR 3-1/2T TAP	1
L314	J709099P3	COIL RF VAR 3-1/2T TAP	1
L401	J707486P10	COIL RF FIX 1.5UH 10%	1
L403	K805570G2	COIL ASM	1
L404	K805570G1	COIL ASM	1
L405	J708428P1	COIL RF VAR 45 MHz	1
L406	K805570G3	COIL ASM	1
L407	A700024P25	COIL RF FIX 10UH 10%	1
L408	J708428P2	COIL RF VAR 45 MHz	1
L409	J707431P1	COIL RF VAR 455KHz 25%	1
L410	J707431P1	COIL RF VAR 455KHz 25%	1
L501	A700024P13	COIL RF FIX 1.0UH 10%	1
L502	A700024P13	COIL RF FIX 1.0UH 10%	1
L503	A700024P13	COIL RF FIX 1.0UH 10%	1
L504	A700024P13	COIL RF FIX 1.0UH 10%	1
L505	L855671P1	COIL RADIO FREQUENCY	1
L506	A700024P13	COIL RF FIX 1.0UH 10%	1
L507	A700024P13	COIL RF FIX 1.0UH 10%	1
L508	A700024P4	COIL RF FIX 0.18UH 10%	1
L601	A700024P13	COIL RF FIX 1.0UH 10%	1
L602	A700024P13	COIL RF FIX 1.0UH 10%	1
L603	A700024P13	COIL RF FIX 1.0UH 10%	1
L604	A700024P13	COIL RF FIX 1.0UH 10%	1
L605	L855671P1	COIL RADIO FREQUENCY	1
L606	A700024P13	COIL RF FIX 1.0UH 10%	1
L607	A700024P13	COIL RF FIX 1.0UH 10%	1
L608	A700024P2	COIL RF FIX 0.12UH 10%	1
L609	K805653G10	COIL RF FIXED 10 1/2T	1
L701	K805570G4	COIL ASM	1
L702	A700024P43	COIL RF FIX 330UH 10%	1
L703	A700024P27	COIL RF FIX 15UH 10%	1
P102	J707064P112	CONN PWB FEM 12-CKT	1
P105	A701883P4	CONN PWB FEM RECP	1
Q100	J707388P1	TSTR NPN SI BFR 53	1
Q101	J707388P1	TSTR NPN SI BFR 53	1
Q102	A701940P1	TSTR NPN SI RF-PWR 0.4W	1
Q103	A700063P1	TSTR NPN SI RF-PWR 2.0W	1
Q104	J709163P1	TSTR NPN SI RF-PWR 10W	1
Q105	J708133P1	TSTR NPN SI RF-PWR 28W G1/G2/G3	1
Q106	J707432P1	TSTR PNP SI BCX 18	1
Q107	J707386P1	TSTR NPN SI BCW 32	1
Q108	J708406P1	TSTR NPN SI BD 233	1
Q109	J707386P1	TSTR NPN SI BCW 32	1
Q201	J707435P1	TSTR PNP SI BC 369	1
Q202	J707386P1	TSTR NPN SI BCW 32	1
Q203	J707432P1	TSTR PNP SI BCX 18	1
Q204	J707386P1	TSTR NPN SI BCW 32	1
Q301	J706011P2	TSTR NPN SI BFR 91A	1
Q302	J708315P1	TSTR JFET SI 2N5245	1
Q401	J707817P1	TSTR JFET SI J 309	1
Q402	J707817P1	TSTR JFET SI J 309	1
Q403	J707419P1	TSTR JFET SI BF511	1
Q404	J708418P1	TSTR NPN SI BFS 20	1
Q405	J708418P1	TSTR NPN SI BFS 20	1
Q406	J708418P1	TSTR NPN SI BFS 20	1
Q407	J707386P1	TSTR NPN SI BCW 32	1
Q408	J707387P1	TSTR PNP SI BCW 30	1
Q501	J707817P1	TSTR JFET SI J 309	1
Q502	J707388P1	TSTR NPN SI BFR 53	1
Q601	J707817P1	TSTR JFET SI J 309	1
Q602	J707388P1	TSTR NPN SI BFR 53	1
Q603	J708318P1	TSTR PNP SI BFT 92	1
Q604	J707433P1	TSTR MFET SI BF 989	1
Q605	J707386P1	TSTR NPN SI BCW 32	1
Q612	J707386P1	TSTR NPN SI BCW 32	1
Q613	J707386P1	TSTR NPN SI BCW 32	1
Q701	J707419P1	TSTR JFET SI BF511	1
Q702	J707387P1	TSTR PNP SI BCW 30	1
R000	J707385P332	RES MFLM 1/8W 3K3 5%	1
R100	J707385P122	RES MFLM 1/8W 1K2 5%	1
R101	J707385P472	RES MFLM 1/8W 4K7 5%	1
R102	J707385P270	RES MFLM 1/8W 27R 5%	1
R103	J707385P470	RES MFLM 1/8W 47R 5%	1
R104	J707385P102	RES MFLM 1/8W 1K0 5%	1
R105	J707385P182	RES MFLM 1/8W 1K8 5%	1
R106	J707385P470	RES MFLM 1/8W 47R 5%	1
R107	J707385P680	RES MFLM 1/8W 68R 5%	1
R108	J707385P560	RES MFLM 1/8W 56R 5%	1
R109	J707385P100	RES MFLM 1/8W 10R 5%	1
R110	J707385P100	RES MFLM 1/8W 10R 5%	1
R111	J707385P100	RES MFLM 1/8W 10R 5%	1
R112	J707385P947	RES MFLM 1/8W 4R7 20%	1
R113	J707385P100	RES MFLM 1/8W 10R 5%	1
R114	J707385P947	RES MFLM 1/8W 4R7 20%	1
R115	J707385P100	RES MFLM 1/8W 10R 5% G1/G2/G3	1
R116	J707385P220	RES MFLM 1/8W 22R 5% G1/G2/G3	1
R117	J707385P220	RES MFLM 1/8W 22R 5% G1/G2/G3	1
R118	J707385P473	RES MFLM 1/8W 47K 5%	1
R119	J707385P820	RES MFLM 1/8W 82R 5%	1
R120	J707385P820	RES MFLM 1/8W 82R 5%	1

PARTS LIST FOR RADIO FREQUENCY BOARD RF611X : M905761GX BD. REV. 2/K

Pos	Code No.	Description	Qt
R121	J707385P333	RES MFLM 1/8W 33K 5%	1
R122	J707385P221	RES MFLM 1/8W 220R 5%	1
R123	J707385P221	RES MFLM 1/8W 220R 5%	1
R132	J708538P9	RES VAR CERM 200K 20%	1
R133	J708538P4	RES VAR CERM 5K0 20%	1
R134	J707385P100	RES MFLM 1/8W 10R 5%	1
R135	J706147P2	RES THERM PTC 80R 25%	1
R136	J707385P682	RES MFLM 1/8W 6K8 5%	1
R137	J707385P223	RES MFLM 1/8W 22K 5%	1
R138	J707385P472	RES MFLM 1/8W 4K7 5%	1
R139	J707385P472	RES MFLM 1/8W 4K7 5%	1
R140	J707385P333	RES MFLM 1/8W 33K 5%	1
R141	J707385P333	RES MFLM 1/8W 33K 5%	1
R142	J707385P104	RES MFLM 1/8W 100K 5%	1
R143	J707385P222	RES MFLM 1/8W 2K2 5%	1
R144	J707385P222	RES MFLM 1/8W 2K2 5%	1
R145	J707385P223	RES MFLM 1/8W 22K 5%	1
R146	J707385P104	RES MFLM 1/8W 100K 5%	1
R147	J707385P104	RES MFLM 1/8W 100K 5%	1
R148	J707385P123	RES MFLM 1/8W 12K 5%	1
R149	J707385P472	RES MFLM 1/8W 4K7 5%	1
R150	J707385P391	RES MFLM 1/8W 390R 5%	1
R151	J707385P683	RES MFLM 1/8W 68K 5%	1
R152	J707385P104	RES MFLM 1/8W 100K 5%	1
R153	J707385P472	RES MFLM 1/8W 4K7 5%	1
R154	J707385P274	RES MFLM 1/8W 270K 5%	1
R155	J707385P682	RES MFLM 1/8W 6K8 5%	1
R156	J707385P102	RES MFLM 1/8W 1K0 5%	1
R157	J707385P392	RES MFLM 1/8W 3K9 5%	1
R158	J707385P472	RES MFLM 1/8W 4K7 5%	1
R159	J707385P104	RES MFLM 1/8W 100K 5% G1/G2/G3	1
R159	J707385P102	RES MFILM 1/8W 1K0 5% G4/G5/G6	1
R160	J709725P1	RES THERM PTC 1K0 G1/G2/G3	1
R161	J707385P331	RES MFLM 1/8W 330R 5% G1/G2/G3	1
R162	J707385P331	RES MFLM 1/8W 330R 5% G1/G2/G3	1
R163	J707385P561	RES MFLM 1/8W 560R 5%	1
R164	J707385P471	RES MFLM 1/8W 470R 5%	1
R165	J707385P391	RES MFLM 1/8W 390R 5% G1/G2/G3	1
R201	J707385P561	RES MFLM 1/8W 560R 5%	1
R202	J707385P271	RES MFLM 1/8W 270R 5%	1
R203	J707385P153	RES MFLM 1/8W 15K 5%	1
R204	J707385P153	RES MFLM 1/8W 15K 5%	1
R205	J707385P472	RES MFLM 1/8W 4K7 5%	1
R206	J707385P272	RES MFLM 1/8W 2K7 5%	1
R207	J707385P563	RES MFLM 1/8W 56K 5%	1
R208	J707385P563	RES MFLM 1/8W 56K 5%	1
R209	J707385P271	RES MFLM 1/8W 270R 5%	1
R301	J707385P471	RES MFLM 1/8W 470R 5%	1
R302	J707385P391	RES MFLM 1/8W 390R 5%	1
R303	J707385P104	RES MFLM 1/8W 100K 5%	1
R304	J707385P104	RES MFLM 1/8W 100K 5%	1
R305	J707385P900	RES MFLM 1/8W 0R JUMPER	1
R306	J707385P222	RES MFLM 1/8W 2K2 5%	1

Pos	Code No.	Description	Qt
R307	J707385P681	RES MFLM 1/8W 680R 5%	1
R308	J707385P470	RES MFLM 1/8W 47R 5%	1
R309	J707385P270	RES MFLM 1/8W 27R 5%	1
R310	J707385P104	RES MFLM 1/8W 100K 5%	1
R311	J707385P560	RES MFLM 1/8W 56R 5%	1
R312	J707385P104	RES MFLM 1/8W 100K 5%	1
R314	J707385P104	RES MFLM 1/8W 100K 5%	1
R316	J707385P104	RES MFLM 1/8W 100K 5%	1
R317	J707385P182	RES MFLM 1/8W 1K8 5%	1
R318	J707385P100	RES MFLM 1/8W 10R 5%	1
R319	J707385P101	RES MFLM 1/8W 100R 5%	1
R321	J707385P270	RES MFLM 1/8W 27R 5%	1
R322	J707385P391	RES MFLM 1/8W 390R 5%	1
R323	J707385P104	RES MFLM 1/8W 100K 5%	1
R324	J707385P104	RES MFLM 1/8W 100K 5%	1
R325	J707385P100	RES MFLM 1/8W 10R 5%	1
R326	J707385P392	RES MFLM 1/8W 3K9 5%	1
R327	J707385P102	RES MFLM 1/8W 1K0 5%	1
R401	J707385P560	RES MFLM 1/8W 56R 5%	1
R402	J707385P100	RES MFLM 1/8W 10R 5%	1
R403	J707385P332	RES MFLM 1/8W 3K3 5%	1
R405	J707385P100	RES MFLM 1/8W 10R 5%	1
R406	J707385P820	RES MFLM 1/8W 82R 5%	1
R407	J707385P470	RES MFLM 1/8W 47R 5%	1
R408	J707385P470	RES MFLM 1/8W 47R 5%	1
R410	J707385P272	RES MFLM 1/8W 2K7 5%	1
R411	J707385P682	RES MFLM 1/8W 6K8 5%	1
R412	J707385P272	RES MFLM 1/8W 2K7 5%	1
R413	J707385P471	RES MFLM 1/8W 470R 5%	1
R414	J707385P220	RES MFLM 1/8W 22R 5%	1
R415	J707385P222	RES MFLM 1/8W 2K2 5%	1
R416	J707385P562	RES MFLM 1/8W 5K6 5%	1
R417	J707385P103	RES MFLM 1/8W 10K 5%	1
R418	J707385P153	RES MFLM 1/8W 15K 5%	1
R419	J707385P182	RES MFLM 1/8W 1K8 5%	1
R420	J707385P182	RES MFLM 1/8W 1K8 5%	1
R421	J707385P182	RES MFLM 1/8W 1K8 5%	1
R422	J707385P473	RES MFLM 1/8W 47K 5%	1
R423	J707385P153	RES MFLM 1/8W 15K 5%	1
R424	J708538P5	RES VAR CERM 10K 20%	1
R425	J707385P272	RES MFLM 1/8W 2K7 5%	1
R426	J707385P333	RES MFLM 1/8W 33K 5% G1/G4	1
R426	J707385P473	RES MFLM 1/8W 47K 5% G2/G3/G5/G6	1
R427	J707385P473	RES MFLM 1/8W 47K 5% G1/G3/G4/G6	1
R427	J707385P393	RES MFLM 1/8W 47K 5% G2/G5	1
R428	J707385P393	RES MFLM 1/8W 39K 5% G1/G4	1
R428	J707385P563	RES MFLM 1/8W 56K 5% G2/G3/G5/G6	1
R429	J707385P104	RES MFLM 1/8W 100K 5%	1
R430	J707385P274	RES MFLM 1/8W 270K 5% G1/G2/G4/G5	1
R430	J707385P334	RES MFLM 1/8W 330K 5% G3/G6	1
R431	J707385P473	RES MFLM 1/8W 47K 5%	1
R432	J707385P473	RES MFLM 1/8W 47K 5%	1
R433	J707385P271	RES MFLM 1/8W 270R 5%	1
R434	J707385P102	RES MFLM 1/8W 1K0 5%	1
R435	J706147P3	RES THERM PTC 250R 25%	1

PARTS LIST FOR RADIO FREQUENCY BOARD RF611X : M905761GX BD. REV. 2/K

Pos	Code No.	Description	Qt
R436	J707385P392	RES MFLM 1/8W 3K9 5%	1
R437	J707406P7	RES THERM NTC 220R 10%	1
R438	J707385P222	RES MFLM 1/8W 2K2 5%	1
R439	J707385P392	RES MFLM 1/8W 3K9 5%	1
R440	J707385P392	RES MFLM 1/8W 3K9 5%	1
R441	J707385P101	RES MFLM 1/8W 100R 5%	1
R442	J708538P6	RES VAR CERM 20K 20%	1
R444	J707385P473	RES MFLM 1/8W 47K 5%	1
R445	J707385P273	RES MFLM 1/8W 27K 5%	1
R446	J707385P224	RES MFLM 1/8W 220K 5%	1
R447	J707385P392	RES MFLM 1/8W 3K9 5%	1
R448	J707385P101	RES MFLM 1/8W 100R 5%	1
R449	J707385P470	RES MFLM 1/8W 47R 5%	1
R450	J707385P103	RES MFLM 1/8W 10K 5%	1
R451	J707385P332	RES MFLM 1/8W 3K3 5%	1
R452	J707385P332	RES MFLM 1/8W 3K3 5%	1
R501	J707385P122	RES MFLM 1/8W 1K2 5%	1
R502	J707385P122	RES MFLM 1/8W 1K2 5%	1
R503	J707385P122	RES MFLM 1/8W 1K2 5%	1
R504	J707385P104	RES MFLM 1/8W 100K 5%	1
R505	J707385P104	RES MFLM 1/8W 100K 5%	1
R506	J707385P104	RES MFLM 1/8W 100K 5%	1
R508	J707385P103	RES MFLM 1/8W 10K 5%	1
R509	J707385P910	RES MFLM 1/8W 1R0 20%	1
R510	J707385P332	RES MFLM 1/8W 3K3 5%	1
R512	J707385P561	RES MFLM 1/8W 560R 5%	1
R513	J707385P183	RES MFLM 1/8W 18K 5%	1
R514	J707385P472	RES MFLM 1/8W 4K7 5%	1
R515	J707385P470	RES MFLM 1/8W 47R 5%	1
R517	J707385P101	RES MFLM 1/8W 100R 5%	1
R518	J707385P470	RES MFLM 1/8W 47R 5%	1
R519	J707385P221	RES MFLM 1/8W 220R 5%	1
R529	J707385P392	RES MFLM 1/8W 3K9 5%	1
R601	J707385P122	RES MFLM 1/8W 1K2 5%	1
R602	J707385P122	RES MFLM 1/8W 1K2 5%	1
R603	J707385P122	RES MFLM 1/8W 1K2 5%	1
R604	J707385P104	RES MFLM 1/8W 100K 5%	1
R605	J707385P104	RES MFLM 1/8W 100K 5%	1
R606	J707385P104	RES MFLM 1/8W 100K 5%	1
R607	J707385P561	RES MFLM 1/8W 560R 5%	1
R608	J707385P221	RES MFLM 1/8W 220R 5%	1
R609	J707385P472	RES MFLM 1/8W 4K7 5%	1
R610	J707385P183	RES MFLM 1/8W 18K 5%	1
R611	J707385P271	RES MFLM 1/8W 270R 5%	1
R612	J707385P222	RES MFLM 1/8W 2K2 5%	1
R613	J707385P101	RES MFLM 1/8W 100R 5%	1
R614	J707385P561	RES MFLM 1/8W 560R 5%	1
R615	J707385P272	RES MFLM 1/8W 2K7 5%	1
R616	J707385P470	RES MFLM 1/8W 47R 5%	1
R617	J707385P683	RES MFLM 1/8W 68K 5%	1
R618	J707385P683	RES MFLM 1/8W 68K 5%	1
R619	J707385P104	RES MFLM 1/8W 100K 5%	1
R620	J707385P271	RES MFLM 1/8W 270R 5%	1
R621	J707385P561	RES MFLM 1/8W 560R 5%	1
R622	J707385P102	RES MFLM 1/8W 1K0 5%	1
R623	J707385P224	RES MFLM 1/8W 220K 5%	1
R624	J707385P223	RES MFLM 1/8W 22K 5%	1
R625	J707385P470	RES MFLM 1/8W 47R 5%	1
R626	J707385P100	RES MFLM 1/8W 10R 5%	1

Pos	Code No.	Description	Qt
R627	J707385P103	RES MFLM 1/8W 10K 5%	1
R628	J707385P224	RES MFLM 1/8W 220K 5%	1
R629	J707385P393	RES MFLM 1/8W 39K 5%	1
R630	J707385P100	RES MFLM 1/8W 10R 5%	1
R631	J707385P824	RES MFLM 1/8W 820K 5%	1
R632	J707385P223	RES MFLM 1/8W 22K 5%	1
R633	J707385P824	RES MFLM 1/8W 820K 5%	1
R634	J707385P123	RES MFLM 1/8W 12K 5%	1
R635	J707385P102	RES MFLM 1/8W 1K0 5%	1
R636	J707385P332	RES MFLM 1/8W 3K3 5%	1
R637	J707385P181	RES MFLM 1/8W 180R 5%	1
R638	J707385P154	RES MFLM 1/8W 150K 5%	1
R639	J707385P682	RES MFLM 1/8W 6K8 5%	1
R640	J707385P105	RES MFLM 1/8W 1M0 10%	1
R641	J707385P184	RES MFLM 1/8W 180K 5%	1
R642	J707385P184	RES MFLM 1/8W 180K 5%	1
R643	J707385P105	RES MFLM 1/8W 1M0 10%	1
R644	J707385P333	RES MFLM 1/8W 33K 5%	1
R645	J707385P103	RES MFLM 1/8W 10K 5%	1
R646	J707385P682	RES MFLM 1/8W 6K8 5%	1
R647	J707385P333	RES MFLM 1/8W 33K 5%	1
R648	J707385P823	RES MFLM 1/8W 82K 5%	1
R649	J707385P393	RES MFLM 1/8W 39K 5%	1
R650	J707385P393	RES MFLM 1/8W 39K 5%	1
R651	J707385P333	RES MFLM 1/8W 33K 5%	1
R652	J707385P222	RES MFLM 1/8W 2K2 5%	1
R653	J707385P333	RES MFLM 1/8W 33K 5%	1
R654	J707385P562	RES MFLM 1/8W 5K6 5%	1
R655	J707385P183	RES MFLM 1/8W 18K 5%	1
R656	J707385P393	RES MFLM 1/8W 39K 5%	1
R657	J707385P823	RES MFLM 1/8W 82K 5%	1
R658	J707385P154	RES MFLM 1/8W 150K 5%	1
R659	J707385P103	RES MFLM 1/8W 10K 5%	1
R660	J707385P333	RES MFLM 1/8W 33K 5%	1
R661	J707385P393	RES MFLM 1/8W 39K 5%	1
R662	J707385P473	RES MFLM 1/8W 47K 5%	1
R663	J708538P6	RES VAR CERM 20K 20%	1
R664	J707385P563	RES MFLM 1/8W 56K 5%	1
R665	J707385P224	RES MFLM 1/8W 220K 5%	1
R666	J707385P124	RES MFLM 1/8W 120K 5%	1
R667	J707385P124	RES MFLM 1/8W 120K 5%	1
R668	J707385P122	RES MFLM 1/8W 1K2 5%	1
R669	J707385P221	RES MFLM 1/8W 220R 5%	1
R670	J707385P103	RES MFLM 1/8W 10K 5%	1
R671	J707385P562	RES MFLM 1/8W 5K6 5%	1
R672	J707385P822	RES MFLM 1/8W 8K2 5%	1
R673	J707385P822	RES MFLM 1/8W 8K2 5%	1
R674	J707385P101	RES MFLM 1/8W 100R 5%	1
R675	J708538P5	RES VAR CERM 10K 20%	1
R676	J707385P102	RES MFLM 1/8W 1K0 5%	1
R677	J708538P5	RES VAR CERM 10K 20%	1
R678	J707385P470	RES MFLM 1/8W 47R 5%	1
R679	J707385P821	RES MFLM 1/8W 820R 5%	1
R680	J708538P6	RES VAR CERM 20K 20%	1
R681	J707385P223	RES MFLM 1/8W 22K 5%	1
R682	J707385P152	RES MFLM 1/8W 1K5 5%	1
R683	J707385P223	RES MFLM 1/8W 22K 5%	1
R684	J707385P183	RES MFLM 1/8W 18K 5%	1
R685	J707385P183	RES MFLM 1/8W 18K 5%	1

PARTS LIST FOR RADIO FREQUENCY BOARD RF611X : M905761GX BD. REV. 2/K

Pos	Code No.	Description	Qt
R686	J707385P103	RES MFLM 1/8W 10K 5%	1
R687	J707385P103	RES MFLM 1/8W 10K 5%	1
R689	J707385P105	RES MFLM 1/8W 1M0 10%	1
R690	J707385P124	RES MFLM 1/8W 120K 5%	1
R691	J707385P273	RES MFLM 1/8W 27K 5%	1
R692	J707385P223	RES MFLM 1/8W 22K 5%	1
R693	J707385P105	RES MFLM 1/8W 1M0 10%	1
R694	J707385P223	RES MFLM 1/8W 22K 5%	1
R695	J707385P105	RES MFLM 1/8W 1M0 10%	1
R696	J707385P223	RES MFLM 1/8W 22K 5%	1
R697	J707385P105	RES MFLM 1/8W 1M0 10%	1
R698	J707385P103	RES MFLM 1/8W 10K 5%	1
R701	J708666P1	RES THERM NTC 5K 2%	1
R702	A701250P413	RES MFLM 1/4W 133K 1%	1
R703	A701250P213	RES MFLM 1/4W 1K33 1%	1
R704	A701250P325	RES MFLM 1/4W 17K8 1%	1
R705	J708666P2	RES THERM NTC 20K 2%	1
R706	J708666P2	RES THERM NTC 20K 2%	1
R707	J707385P104	RES MFLM 1/8W 100K 5%	1
R708	J707385P105	RES MFLM 1/8W 1M0 10%	1
R709	J707385P181	RES MFLM 1/8W 180R 5%	1
R710	J707385P101	RES MFLM 1/8W 100R 5%	1
R711	J707385P223	RES MFLM 1/8W 22K 5%	1
R712	J707385P154	RES MFLM 1/8W 150K 5%	1
R713	J707385P821	RES MFLM 1/8W 820R 5%	1
R714	J707385P104	RES MFLM 1/8W 100K 5%	1
U100	J708165P2	IC LIN OP-AMP 324	1
U201	J708333P1	IC LIN VR FIX 4785	1
U401	J707449P1	IC LIN IF-AMP 3357	1
U402	M905766G1	INT CKT SQ 4002 G1/G4 *	1
U402	M905766G2	INT CKT SQ 4003 G3/G6	1
U402	M905766G3	INT CKT SQ 4004 G2/G5 *	1
U601	J707859P1	IC LIN OP-AMP 204	1
U602	J707859P1	IC LIN OP-AMP 204	1
U603	J707859P1	IC LIN OP-AMP 204	1
U604	J707859P1	IC LIN OP-AMP 204	1
U606	J707243P1	IC DIG REG 4094	1
U607	J707374P3	IC PLL PRESC 12017	1
U608	B800902P1	IC PLL SYN CUSTOM DES	1
U609	J707859P1	IC LIN OP-AMP 204	1
U610	J708503P2	IC LIN CMPAR LM 339	1
U615	J708621P2	CPLR OPTO PC 827	1
U616	J708503P2	IC LIN CMPAR LM 339	1
W001	A700184P1	RES WIRE JMPR OR JUMPER	1
W003	J707256P1	COIL FIX	1
W004	J707256P1	COIL FIX	1
W005	J708717P1	STRAP	1
W006	J709241P1	STRAP	1
W007	J709241P1	STRAP	1
Y401	J708426P1	CRYSTAL UNIT 44.5450MHZ	1
Y701	J707567P19	CRYSTAL UNIT 7.4000MHZ	1
Z401	J708330P1	FLTR CRY 45.0 +/-7.5KHz G1/G4	1
Z401	J708330P2	FLTR CRY 45.0 +/-6.0KHz G2/G5	1
Z401	J708330P3	FLTR CRY 45.0 +/-3.75KHz G3/G6	1
Z402	J707446P1	FLTR CER 455K +/-10KHz G1/G4	1
Z402	J707446P3	FLTR CER 455K +/-7.5KHz G2/G5	1
Z402	J707446P4	FLTR CER 455K +/-4-5KHz G3/G6	1
Z403	J707446P1	FLTR CER 455K +/-10KHz G1/G4	1
Z403	J707446P3	FLTR CER 455K +/-7.5KHz G2/G5	1
Z403	J707446P4	FLTR CER 455K +/-4.5KHz G3/G6	1
	M905762P1R2	BD PW G1/G2/G3	1
	M905762P2R2	BD PW G4/G5/G6	1
		NON REFERENCED ITEMS:	
	J708966G1	HEAT SINK MODF	1
	K805569G2	SHIELD METALLIZED	1
	J706281P6	CORE SCREW FERR U 10	8
	J708561P3	COIL FIXED	1
	J708561P3	COIL FIXED	1
	J708561P3	COIL FIXED	1
	J706804P3	WASH INS CRYS FOR HC-45/U	2
	J706804P2	WASH INS CRYS FOR HC-18/U	2

PARTS LIST FOR RADIO FREQUENCY BOARD RF611X : M905761G1/G2/G3/G4/G5/G6

Pos	Code No.	Description	Qt
		COMPONENTS REVISED SINCE LAST EDITION ARE MARKED ✱	
	M905761G1	RF6112S25 CH. SPAC. 25kHz/25W OUT	
	M905761G2	RF6113S25 CH. SPAC. 20kHz/25W OUT	
	M905761G3	RF6114S25 CH. SPAC. 12.5kHz/25W OUT	
	M905761G4	RF6112S6 CH. SPAC. 25kHz/6W OUT	
	M905761G5	RF6113S6 CH. SPAC. 20kHz/6W OUT	
	M905761G6	RF6114S6 CH. SPAC. 12.5kHz/6W OUT	
C000	J707438P8	CAP CER CL2 3N3 10%	1
C001	J707809P5	CAP CER NPO 2P2 .25P G1	1
C100	J707809P10	CAP CER NPO 5P6 .25P	1
C101	J707438P4	CAP CER CL2 680P 10%	1
C102	J707809P8	CAP CER NPO 3P9 .25P	1
C103	J707809P27	CAP CER NPO 150P 5%	1
C104	J707809P19	CAP CER NPO 33P 5%	1
C105	J707809P13	CAP CER NPO 10P 5%	1
C106	J707438P14	CAP CER CL2 10N 10%	1
C107	J707809P25	CAP CER NPO 100P 5%	1
C108	J707809P22	CAP CER NPO 56P 5%	1
C109	J707809P17	CAP CER NPO 22P 5%	1
C110	J707438P14	CAP CER CL2 10N 10%	1
C111	J707809P25	CAP CER NPO 100P 5%	1
C112	J707438P4	CAP CER CL2 680P 10%	1
C113	J707809P21	CAP CER NPO 47P 5%	1
C114	J707809P25	CAP CER NPO 100P 5%	1
C115	J707809P24	CAP CER NPO 82P 5%	1
C116	J707438P14	CAP CER CL2 10N 10%	1
C117	J707809P26	CAP CER NPO 120P 5%	1
C118	J707438P14	CAP CER CL2 10N 10%	1
C119	J707438P4	CAP CER CL2 680P 10%	1
C120	J707809P23	CAP CER NPO 68P 5%	1
C121	J707809P23	CAP CER NPO 68P 5%	1
C122	A700006P34	CAP MICA 100P 5%	1
C123	J707438P14	CAP CER CL2 10N 10%	1
C124	J707809P26	CAP CER NPO 120P 5%	1
C125	J707438P4	CAP CER CL2 680P 10%	1
C126	J707438P14	CAP CER CL2 10N 10%	1
C127	J707353P6	CAP ELECT 4U7 25V	1
C128	J707809P27	CAP CER NPO 150P 5%	1
C129	J707809P27	CAP CER NPO 150P 5%	1
C130	A700006P32	CAP MICA 82P 5% G1/G2/G3	1
C130	A700006P30	CAP MICA 68P 5% G4/G5/G6	1
C131	A700006P41	CAP MICA 180P 5% G1/G2/G3	1
C131	A700006P32	CAP MICA 82P 5% G4/G5/G6	1
C132	A700006P41	CAP MICA 180P 5% G1/G2/G3	1
C133	J707438P26	CAP CER CL2 100N 10% G1/G2/G3	1
C134	J707809P26	CAP CER NPO 120P 5% G1/G2/G3	1
C135	J707438P4	CAP CER CL2 680P 10%	1
C136	A700006P26	CAP MICA 47P 5% G1/G2/G3	1
C137	A700006P34	CAP MICA 100P 5% G1/G2/G3	1
C138	J707809P27	CAP CER NPO 150P 5%	1
C139	J707809P27	CAP CER NPO 150P 5%	1
C140	J707809P27	CAP CER NPO 150P 5%	1
C141	J707809P27	CAP CER NPO 150P 5%	1
C142	A700006P6	CAP MICA 10P 5%	1
C143	A700006P22	CAP MICA 36P 5%	1
C144	A700006P22	CAP MICA 36P 5%	1
C145	A700006P11	CAP MICA 15P 5%	1
C146	J707438P4	CAP CER CL2 680P 10%	1
C147	J707438P4	CAP CER CL2 680P 10%	1
C148	J707438P4	CAP CER CL2 680P 10%	1
C149	J707438P4	CAP CER CL2 680P 10%	1
C150	J707809P1	CAP CER NPO 1P0 .25P	1
C151	J707809P1	CAP CER NPO 1P0 .25P	1
C152	J707438P4	CAP CER CL2 680P 10%	1
C153	J707438P4	CAP CER CL2 680P 10%	1
C154	J707438P4	CAP CER CL2 680P 10%	1
C155	J707438P4	CAP CER CL2 680P 10%	1
C156	J707353P3	CAP ELECT 0U47 50V	1
C157	J707438P4	CAP CER CL2 680P 10%	1
C158	J707438P4	CAP CER CL2 680P 10%	1
C159	J707438P14	CAP CER CL2 10N 10%	1
C160	J707438P4	CAP CER CL2 680P 10%	1
C161	J707438P14	CAP CER CL2 10N 10%	1
C162	J707438P14	CAP CER CL2 10N 10%	1
C163	J707438P20	CAP CER CL2 33N 10% ✱	1
C164	J707438P4	CAP CER CL2 680P 10%	1
C165	J707438P4	CAP CER CL2 680P 10%	1
C166	J707438P4	CAP CER CL2 680P 10%	1
C167	A701413P34	CAP MICA 100P 5% G1/G2/G3	1
C167	A701413P38	CAP MICA 150P 5% G4/G5/G6	1
C168	A700006P28	CAP MICA 56P 5% G1/G2/G3	1
C168	A700006P32	CAP MICA 82P 5% G4/G5/G6	1
C169	A700006P9	CAP MICA 13P 5% G1/G2/G3	1
C169	A700006P22	CAP MICA 36P 5% G4/G5/G6	1
C170	J707809P8	CAP CER NPO 3P9 .25P G1/G2/G3	1
C170	J707809P13	CAP CER NPO 10P 5% ✱	1
C172	J707438P14	CAP CER CL2 10N 10% ✱	1

PARTS LIST FOR RADIO FREQUENCY BOARD RF611X : M905761G1/G2/G3/G4/G5/G6

Pos	Code No.	Description	Qt
C173	J707436P77	CAP CER NPO 470P 5% ✱	1
C174	J707438P8	CAP CER CL2 3N3 10% ✱	1
C175	J707438P5	CAP CER CL2 1N 10% ✱	1
C176	J707438P14	CAP CER CL2 10N 10% ✱	1
C201	J707438P26	CAP CER CL2 100N 10%	1
C202	J707444P8	CAP TA SOL 22U 16V	1
C203	J707444P6	CAP TA SOL 4U7 35V	1
C204	J707436P77	CAP CER NPO 470P 5%	1
C205	J707412P9	CAP PYES 100N 10%	1
C301	J707436P3	CAP CER NPO 1P5 .25P	1
C302	J707438P5	CAP CER CL2 1N 10%	1
C304	J707436P8	CAP CER NPO 3P9 .25P	1
C305	J707436P21	CAP CER NPO 15P 5%	1
C306	J707483P1	CAP PHEN 0P47 5%	1
C307	J707438P5	CAP CER CL2 1N 10% G1/G2/G3	1
C307	J707438P4	CAP CER CL2 680P 10% G4/G5/G6	1
C309	J707436P21	CAP CER NPO 15P 5%	1
C310	J707438P5	CAP CER CL2 1N 10%	1
C311	J707438P5	CAP CER CL2 1N 10%	1
C312	J707436P87	CAP CER NPO 1N2 5%	1
C314	J707436P5	CAP CER NPO 2P2 .25P	1
C315	J707438P5	CAP CER CL2 1N 10%	1
C316	J707436P5	CAP CER NPO 2P2 .25P	1
C317	J707444P2	CAP TA SOL 0U22 35V	1
C318	J707438P5	CAP CER CL2 1N 10%	1
C319	J707436P21	CAP CER NPO 15P 5%	1
C320	J707438P5	CAP CER CL2 1N 10%	1
C322	J707483P7	CAP PHEN 1P00 5%	1
C323	J707483P5	CAP PHEN 0P68 5%	1
C324	J707483P4	CAP PHEN 0P56 5%	1
C325	J707438P5	CAP CER CL2 1N 10%	1
C326	J707436P21	CAP CER NPO 15P 5%	1
C328	J707436P21	CAP CER NPO 15P 5%	1
C331	J707436P21	CAP CER NPO 15P 5%	1
C332	J707436P21	CAP CER NPO 15P 5%	1
C333	J707483P13	CAP PHEN 0P22 10%	1
C335	J707438P5	CAP CER CL2 1N 10%	1
C338	J707436P11	CAP CER NPO 6P8 .25P	1
C339	J707438P5	CAP CER CL2 1N 10%	1
C340	J707438P8	CAP CER CL2 3N3 10%	1
C345	J707436P37	CAP CER NPO 33P 5%	1
C347	J707438P5	CAP CER CL2 1N 10%	1
C348	J707438P5	CAP CER CL2 1N 10%	1
C350	J707436P3	CAP CER NPO 1P5 .25P	1
C351	J707436P13	CAP CER NPO 10P 5%	1
C353	J707483P2	CAP PHEN 0P33 5%	1
C354	J707436P13	CAP CER NPO 10P 5%	1
C355	J707483P8	CAP PHEN 1P20 5%	1
C356	J707438P5	CAP CER CL2 1N 10%	1
C357	J707436P1	CAP CER NPO 1P0 .25P	1
C358	J707436P1	CAP CER NPO 1P0 .25P	1
C359	J707436P1	CAP CER NPO 1P0 .25P	1
C401	J707438P8	CAP CER CL2 3N3 10%	1
C402	J707438P8	CAP CER CL2 3N3 10%	1
C403	J707438P8	CAP CER CL2 3N3 10%	1
C404	J707436P9	CAP CER NPO 4P7 .25P	1
C405	J707438P26	CAP CER CL2 100N 10%	1
C406	J707436P10	CAP CER NPO 5P6 .25P	1
C407	J707436P9	CAP CER NPO 4P7 .25P	1
C408	J707438P5	CAP CER CL2 1N 10%	1
C409	J707438P8	CAP CER CL2 3N3 10%	1
C410	J707444P8	CAP TA SOL 22U 16V	1
C411	J707438P26	CAP CER CL2 100N 10%	1
C412	J707438P26	CAP CER CL2 100N 10%	1
C413	J707436P21	CAP CER NPO 15P 5%	1
C414	J707438P8	CAP CER CL2 3N3 10%	1
C415	J707438P8	CAP CER CL2 3N3 10%	1
C416	J708702P16	CAP CER N750 18P 5%	1
C417	J707436P49	CAP CER NPO 56P 5%	1
C418	J707438P14	CAP CER CL2 10N 10%	1
C419	J707438P26	CAP CER CL2 100N 10%	1
C420	J707438P14	CAP CER CL2 10N 10%	1
C421	J707438P26	CAP CER CL2 100N 10%	1
C422	J707438P26	CAP CER CL2 100N 10%	1
C423	J707436P13	CAP CER NPO 10P 5%	1
C424	J707438P8	CAP CER CL2 3N3 10%	1
C425	J707412P13	CAP PYES 470N 10%	1
C426	J707436P93	CAP CER NPO 2N2 5%	1
C427	J707436P73	CAP CER NPO 330P 5%	1
C428	J707436P71	CAP CER NPO 270P 5% G1/G2/G4/G5	1
C428	J707436P69	CAP CER NPO 220P 5% G3/G6	1
C429	J707438P14	CAP CER CL2 10N 10%	1
C430	J707444P8	CAP TA SOL 22U 16V	1
C431	J707444P8	CAP TA SOL 22U 16V	1
C432	J707438P26	CAP CER CL2 100N 10%	1
C433	J707438P26	CAP CER CL2 100N 10%	1
C434	J707438P8	CAP CER CL2 3N3 10%	1
C435	J707436P1	CAP CER NPO 1P0 .25P	1
C436	J707438P26	CAP CER CL2 100N 10%	1
C501	J707412P11	CAP PYES 220N 10%	1
C502	J707412P11	CAP PYES 220N 10%	1
C503	J707412P11	CAP PYES 220N 10%	1
C504	A700235P7	CAP CER N150 3P3 .25P	1
C505	A700235P4	CAP CER N150 1P8 .25P	1
C506	A700235P12	CAP CER N150 8P2 .25P	1
C507	A700235P14	CAP CER N150 12P 5%	1
C508	A700235P32	CAP CER N150 11P 5%	1
C509	A700235P10	CAP CER N150 5P6 .25P	1
C510	A700235P16	CAP CER N150 18P 5%	1
C512	A700235P2	CAP CER NPO 1P2 .25P	1
C513	J707438P3	CAP CER CL2 470P 10%	1
C515	J707436P12	CAP CER NPO 8P2 .25P	1
C516	J707436P11	CAP CER NPO 6P8 .25P	1
C517	J707444P6	CAP TA SOL 4U7 35V	1
C518	J707436P3	CAP CER NPO 1P5 .25P	1
C519	J707438P3	CAP CER CL2 470P 10%	1
C520	J707436P5	CAP CER NPO 2P2 .25P	1
C521	J707436P17	CAP CER NPO 12P 5%	1
C522	J707438P3	CAP CER CL2 470P 10%	1
C523	J707436P5	CAP CER NPO 2P2 .25P	1
C524	J707438P3	CAP CER CL2 470P 10%	1
C525	J707438P3	CAP CER CL2 470P 10%	1
C526	J707438P3	CAP CER CL2 470P 10%	1
C527	J707438P3	CAP CER CL2 470P 10%	1

Pos	Code No.	Description	Qt
C528	J707438P3	CAP CER CL2 470P 10%	1
C540	J707438P3	CAP CER CL2 470P 10%	1
C541	J707438P3	CAP CER CL2 470P 10%	1
C542	J707438P3	CAP CER CL2 470P 10%	1
C543	J707438P3	CAP CER CL2 470P 10%	1
C544	J707438P3	CAP CER CL2 470P 10%	1
C545	J707438P3	CAP CER CL2 470P 10%	1
C601	J707412P11	CAP PYES 220N 10%	1
C602	J707412P11	CAP PYES 220N 10%	1
C603	J707412P11	CAP PYES 220N 10%	1
C604	A700235P5	CAP CER N150 2P2 .25P	1
C605	A700235P5	CAP CER N150 2P2 .25P	1
C606	A700235P8	CAP CER N150 3P9 .25P	1
C607	A700235P10	CAP CER N150 5P6 .25P	1
C608	A700235P11	CAP CER N150 6P8 .25P	1
C609	A700235P36	CAP CER N150 7P5 .25P	1
C610	A700235P12	CAP CER N150 8P2 .25P	1
C611	J707436P7	CAP CER NPO 3P3 .25P	1
C612	J707436P9	CAP CER NPO 4P7 .25P	1
C613	J707444P6	CAP TA SOL 4U7 35V	1
C614	J707436P1	CAP CER NPO 1P0 .25P	1
C615	J707436P77	CAP CER NPO 470P 5%	1
C616	J707438P3	CAP CER CL2 470P 10%	1
C617	J707436P1	CAP CER NPO 1P0 .25P	1
C618	J707436P10	CAP CER NPO 5P6 .25P	1
C619	J707438P3	CAP CER CL2 470P 10%	1
C620	J707436P5	CAP CER NPO 2P2 .25P	1
C621	J707438P3	CAP CER CL2 470P 10%	1
C624	J707436P69	CAP CER NPO 220P 5%	1
C625	J707438P26	CAP CER CL2 100N 10%	1
C626	J707438P5	CAP CER CL2 1N 10%	1
C627	J707438P14	CAP CER CL2 10N 10%	1
C628	J707436P93	CAP CER NPO 2N2 5%	1
C629	J707436P65	CAP CER NPO 150P 5%	1
C630	J707436P69	CAP CER NPO 220P 5%	1
C631	J707436P69	CAP CER NPO 220P 5%	1
C632	J707438P26	CAP CER CL2 100N 10%	1
C633	J707444P17	CAP TA SOL 47U 10V	1
C634	J707438P26	CAP CER CL2 100N 10%	1
C635	J707438P3	CAP CER CL2 470P 10%	1
C636	J707444P17	CAP TA SOL 47U 10V	1
C637	J707438P26	CAP CER CL2 100N 10%	1
C639	J707438P8	CAP CER CL2 3N3 10%	1
C640	J707412P9	CAP PYES 100N 10%	1
C641	J707412P13	CAP PYES 470N 10%	1
C642	J707412P13	CAP PYES 470N 10%	1
C643	J707438P22	CAP CER CL2 47N 10%	1
C644	J707436P6	CAP CER NPO 2P7 .25P	1
C652	J707438P5	CAP CER CL2 1N 10%	1
C653	J707444P6	CAP TA SOL 4U7 35V	1
C656	J707436P77	CAP CER NPO 470P 5%	1
C657	J707438P3	CAP CER CL2 470P 10%	1
C659	J707438P5	CAP CER CL2 1N 10%	1
C660	J707438P12	CAP CER CL2 6N8 5%	1
C665	J707438P3	CAP CER CL2 470P 10%	1
C666	J707438P3	CAP CER CL2 470P 10%	1
C667	J707438P3	CAP CER CL2 470P 10%	1
C668	J707436P61	CAP CER NPO 100P 5%	1
C701	J707436P29	CAP CER NPO 22P 5%	1

Pos	Code No.	Description	Qt
C702	J708702P22	CAP CER N750 56P 5%	1
C703	J707436P69	CAP CER NPO 220P 5%	1
C704	J707436P13	CAP CER NPO 10P 5%	1
C705	J707438P5	CAP CER CL2 1N 10%	1
C706	J707438P14	CAP CER CL2 10N 10%	1
C707	J707436P10	CAP CER NPO 5P6 .25P	1
C708	J707438P14	CAP CER CL2 10N 10%	1
C709	J707438P14	CAP CER CL2 10N 10%	1
D100	A700047P3	DIO SI SIG 1N6263	1
D101	J706892P1	DIO SI PIN UM 9401	1
D102	J706892P1	DIO SI PIN UM 9401	1
D103	J707390P1	DIO SI SIG BAV 74	1
D300	J707928P2	DIO SI CAP BB 809	1
D301	J707928P2	DIO SI CAP BB 809	1
D302	J707928P2	DIO SI CAP BB 809	1
D303	J707928P2	DIO SI CAP BB 809	1
D304	J707928P2	DIO SI CAP BB 809	1
D305	J707928P2	DIO SI CAP BB 809	1
D306	J707928P2	DIO SI CAP BB 809	1
D307	J707928P2	DIO SI CAP BB 809	1
D401	A700025P8	DIO SI ZENR 6V8 5% 0.4W	1
D501	J706007P1	DIO SI CAP BB 505B	1
D502	J706007P1	DIO SI CAP BB 505B	1
D503	J706007P1	DIO SI CAP BB 505B	1
D504	J707928P2	DIO SI CAP BB 809	1
D505	J707769P2	DIO SI CAP BBY 31 ✱	1
D601	J706007P1	DIO SI CAP BB 505B	1
D602	J706007P1	DIO SI CAP BB 505B	1
D603	J706007P1	DIO SI CAP BB 505B	1
D604	J706007P1	DIO SI CAP BB 505B	1
D605	J707389P1	DIO SI SIG BAV 99	1
D606	J708681P1	DIO SI SIG BAW 56	1
D607	J707390P1	DIO SI SIG BAV 74	1
D608	J707390P1	DIO SI SIG BAV 74	1
D610	J708681P1	DIO SI SIG BAW 56	1
D701	J707928P2	DIO SI CAP BB 809	1
D702	J707390P1	DIO SI SIG BAV 74	1
L100	A700024P1	COIL RF FIX 0.1UH 10%	1
L101	A700024P1	COIL RF FIX 0.1UH 10%	1
L102	K805653G5	COIL ASM 5 1/2T	1
L103	J707339G1	COIL FIX ASM	1
L104	A700024P1	COIL RF FIX 0.1UH 10%	1
L105	K805653G1	COIL ASM 1 1/2T	1
L106	J707256P2	COIL FIX	1
L107	J707339G1	COIL FIX ASM	1
L108	K805653G2	COIL ASM 2 1/2T G2/G2/G3	1
L108	K805653G6	COIL ASM 6 1/2T G4/G5/G6	1
L109	J707339G1	COIL FIX ASM	1
L110	J707256P1	COIL FIX G1/G2/G3	1
L110	J707256P2	COIL FIX G4/G5/G6	1
L112	J707339G1	COIL FIX ASM	1
L113	A700024P13	COIL RF FIX 1.0UH 10%	1
L114	K805653G2	COIL ASM 2 1/2T G1/G2/G3	1
L114	K805653G4	COIL ASM 4 1/2T G4/G5/G6	1
L115	J709287P1	CORE TOR FERR	1
L116	J709287P1	CORE TOR FERR G1/G2/G3	1
L117	K805653G4	COIL ASM 4 1/2T G1/G2/G3	1
L118	J707339G1	COIL FIX ASM G1/G2/G3	1
L119	J709603P2	COIL G1/G2/G3 ✱	1

Pos	Code No.	Description	Qt
L120	J707256P2	COIL FIX G1/G2/G3	1
L120	J707256P1	COIL FIX G4/G5/G6	1
L121	A700024P13	COIL RF FIX 1.0UH 10%	1
L122	A700024P25	COIL RF FIX 10UH 10%	1
L123	A700024P14	COIL RF FIX 1.2UH 10%	1
L124	K805653G5	COIL ASM 5 1/2T	1
L125	K805653G6	COIL ASM 6 1/2T	1
L126	K805653G5	COIL ASM 5 1/2T	1
L127	A700024P25	COIL RF FIX 10UH 10%	1
L128	A700024P25	COIL RF FIX 10UH 10%	1
L129	A700024P13	COIL RF FIX 1.0UH 10%	1
L130	K805653G2	COIL ASM 2 1/2T G1/G2/G3	1
L130	K805653G1	COIL ASM 1 1/2T G4/G5/G6	1
L131	K805653G3	COIL ASM 3 1/2T G1/G2/G3	1
L131	K805653G2	COIL ASM 2 1/2T G4/G5/G6	1
L301	J709099P13	COIL RF VAR 4-1/2T TAP	1
L302	J709099P13	COIL RF VAR 4-1/2T TAP	1
L303	J707486P6	COIL RF FIX 0.47UH 10%	1
L304	J709099P2	COIL RF VAR 4-1/2T TAP	1
L305	J707486P2	COIL RF FIX 3.3UH 10%	1
L306	J709099P7	COIL RF VAR 4-1/2T TAP	1
L308	J709099P6	COIL RF VAR 4-1/2T TAP	1
L310	J709099P2	COIL RF VAR 4-1/2T TAP	1
L312	J708428P2	COIL RF VAR 45 MHZ	1
L313	J709099P4	COIL RF VAR 3-1/2T TAP	1
L314	J709099P3	COIL RF VAR 3-1/2T TAP	1
L401	J707486P10	COIL RF FIX 1.5UH 10%	1
L403	K805570G2	COIL ASM	1
L404	K805570G1	COIL ASM	1
L405	J708428P1	COIL RF VAR 45 MHz	1
L406	K805570G3	COIL ASM	1
L407	A700024P25	COIL RF FIX 10UH 10%	1
L408	J708428P2	COIL RF VAR 45 MHz	1
L409	J707431P1	COIL RF VAR 455KHz 25%	1
L410	J707431P1	COIL RF VAR 455KHz 25%	1
L501	A700024P13	COIL RF FIX 1.0UH 10%	1
L502	A700024P13	COIL RF FIX 1.0UH 10%	1
L503	A700024P13	COIL RF FIX 1.0UH 10%	1
L504	A700024P13	COIL RF FIX 1.0UH 10%	1
L505	L855671P1	COIL RADIO FREQUENCY	1
L506	A700024P13	COIL RF FIX 1.0UH 10%	1
L507	A700024P13	COIL RF FIX 1.0UH 10%	1
L508	A700024P4	COIL RF FIX 0.18UH 10%	1
L601	A700024P13	COIL RF FIX 1.0UH 10%	1
L602	A700024P13	COIL RF FIX 1.0UH 10%	1
L603	A700024P13	COIL RF FIX 1.0UH 10%	1
L604	A700024P13	COIL RF FIX 1.0UH 10%	1
L605	L855671P1	COIL RADIO FREQUENCY	1
L606	A700024P13	COIL RF FIX 1.0UH 10%	1
L607	A700024P13	COIL RF FIX 1.0UH 10%	1
L608	A700024P2	COIL RF FIX 0.12UH 10%	1
L609	K805653G10	COIL RF FIXED 10 1/2T	1
L701	K805570G4	COIL ASM	1
L702	A700024P43	COIL RF FIX 330UH 10%	1
L703	A700024P27	COIL RF FIX 15UH 10%	1
P102	J707064P112	CONN PWB FEM 12-CKT	1
P105	A701883P4	CONN PWB FEM RECP	1
Q100	J707388P1	TSTR NPN SI BFR 53	1
Q101	J707388P1	TSTR NPN SI BFR 53	1

Pos	Code No.	Description	Qt
Q102	A701940P1	TSTR NPN SI RF-PWR 0.4W	1
Q103	A700063P1	TSTR NPN SI RF-PWR 2.0W	1
Q104	J709163P1	TSTR NPN SI RF-PWR 10W	1
Q105	J708133P1	TSTR NPN SI RF-PWR 28W G1/G2/G3	1
Q106	J707432P1	TSTR PNP SI BCX 18	1
Q107	J707386P1	TSTR NPN SI BCW 32	1
Q108	J708406P1	TSTR NPN SI BD 233	1
Q109	J707386P1	TSTR NPN SI BCW 32	1
Q201	J707435P1	TSTR PNP SI BC 369	1
Q202	J707386P1	TSTR NPN SI BCW 32	1
Q203	J707432P1	TSTR PNP SI BCX 18	1
Q204	J707386P1	TSTR NPN SI BCW 32	1
Q301	J706011P2	TSTR NPN SI BFR 91A	1
Q302	J708315P1	TSTR JFET SI 2N5245	1
Q401	J707817P1	TSTR JFET SI J 309	1
Q402	J707817P1	TSTR JFET SI J 309	1
Q403	J707419P1	TSTR JFET SI BF511	1
Q404	J708418P1	TSTR NPN SI BFS 20	1
Q405	J708418P1	TSTR NPN SI BFS 20	1
Q406	J708418P1	TSTR NPN SI BFS 20	1
Q407	J707386P1	TSTR NPN SI BCW 32	1
Q408	J707387P1	TSTR PNP SI BCW 30	1
Q501	J707817P1	TSTR JFET SI J 309	1
Q502	J707388P1	TSTR NPN SI BFR 53	1
Q601	J707817P1	TSTR JFET SI J 309	1
Q602	J707388P1	TSTR NPN SI BFR 53	1
Q603	J708318P1	TSTR PNP SI BFT 92	1
Q604	J707433P1	TSTR MFET SI BF 989	1
Q605	J707386P1	TSTR NPN SI BCW 32	1
Q612	J707386P1	TSTR NPN SI BCW 32	1
Q613	J707386P1	TSTR NPN SI BCW 32	1
Q701	J707419P1	TSTR JFET SI BF511	1
Q702	J707387P1	TSTR PNP SI BCW 30	1
R000	J707385P332	RES MFLM 1/8W 3K3 5%	1
R100	J707385P122	RES MFLM 1/8W 1K2 5%	1
R101	J707385P472	RES MFLM 1/8W 4K7 5%	1
R102	J707385P270	RES MFLM 1/8W 27R 5%	1
R103	J707385P470	RES MFLM 1/8W 47R 5%	1
R104	J707385P102	RES MFLM 1/8W 1K0 5%	1
R105	J707385P182	RES MFLM 1/8W 1K8 5%	1
R106	J707385P470	RES MFLM 1/8W 47R 5%	1
R107	J707385P680	RES MFLM 1/8W 68R 5%	1
R108	J707385P560	RES MFLM 1/8W 56R 5%	1
R109	J707385P100	RES MFLM 1/8W 10R 5%	1
R110	J707385P100	RES MFLM 1/8W 10R 5%	1
R111	J707385P100	RES MFLM 1/8W 10R 5%	1
R112	J707385P947	RES MFLM 1/8W 4R7 20%	1
R113	J707385P100	RES MFLM 1/8W 10R 5%	1
R114	J707385P947	RES MFLM 1/8W 4R7 20%	1
R115	J707385P100	RES MFLM 1/8W 10R 5% G1/G2/G3	1
R116	J707385P220	RES MFLM 1/8W 22R 5% G1/G2/G3	1
R117	J707385P220	RES MFLM 1/8W 22R 5% G1/G2/G3	1
R118	J707385P473	RES MFLM 1/8W 47K 5%	1
R119	J707385P820	RES MFLM 1/8W 82R 5%	1
R120	J707385P820	RES MFLM 1/8W 82R 5%	1

PARTS LIST FOR RADIO FREQUENCY BOARD RF611X : M905761G1/G2/G3/G4/G5/G6

Pos	Code No.	Description		Qt
R121	J707385P333	RES MFLM 1/8W 33K 5%		1
R122	J707385P221	RES MFLM 1/8W 220R 5%		1
R123	J707385P221	RES MFLM 1/8W 220R 5%		1
R132	J708538P9	RES VAR CERM 200K 20%		1
R133	J708538P4	RES VAR CERM 5K0 20%		1
R134	J707385P100	RES MFLM 1/8W 10R 5%		1
R135	J706147P2	RES THERM PTC 80R 25%		1
R136	J707385P682	RES MFLM 1/8W 6K8 5%		1
R137	J707385P223	RES MFLM 1/8W 22K 5%		1
R138	J707385P472	RES MFLM 1/8W 4K7 5%		1
R139	J707385P472	RES MFLM 1/8W 4K7 5%		1
R140	J707385P333	RES MFLM 1/8W 33K 5%		1
R141	J707385P333	RES MFLM 1/8W 33K 5%		1
R142	J707385P104	RES MFLM 1/8W 100K 5%		1
R143	J707385P222	RES MFLM 1/8W 2K2 5%		1
R144	J707385P222	RES MFLM 1/8W 2K2 5%		1
R145	J707385P223	RES MFLM 1/8W 22K 5%	✱	1
R146	J707385P104	RES MFLM 1/8W 100K 5%	✱	1
R147	J707385P104	RES MFLM 1/8W 100K 5%		1
R148	J707385P123	RES MFLM 1/8W 12K 5%		1
R149	J707385P472	RES MFLM 1/8W 4K7 5%		1
R150	J707385P391	RES MFLM 1/8W 390R 5%		1
R151	J707385P683	RES MFLM 1/8W 68K 5%		1
R152	J707385P104	RES MFLM 1/8W 100K 5%		1
R153	J707385P472	RES MFLM 1/8W 4K7 5%	✱	1
R154	J707385P274	RES MFLM 1/8W 270K 5%		1
R155	J707385P682	RES MFLM 1/8W 6K8 5%	✱	1
R156	J707385P102	RES MFLM 1/8W 1K0 5%		1
R157	J707385P392	RES MFLM 1/8W 3K9 5%		1
R158	J707385P472	RES MFLM 1/8W 4K7 5%	✱	1
R159	J707385P104	RES MFLM 1/8W 100K 5% G1/G2/G3	✱	1
R159	J707385P102	RES MFILM 1/8W 1K0 5% G4/G5/G6	✱	1
R160	J709725P1	RES THERM PTC 1K0 G1/G2/G3	✱	1
R161	J707385P331	RES MFLM 1/8W 330R 5% G1/G2/G3	✱	1
R162	J707385P331	RES MFLM 1/8W 330R 5% G1/G2/G3	✱	1
R163	J707385P561	RES MFLM 1/8W 560R 5%	✱	1
R164	J707385P471	RES MFLM 1/8W 470R 5%	✱	1
R165	J707385P391	RES MFLM 1/8W 390R 5% G1/G2/G3	✱	1
R201	J707385P561	RES MFLM 1/8W 560R 5%		1
R202	J707385P271	RES MFLM 1/8W 270R 5%		1
R203	J707385P153	RES MFLM 1/8W 15K 5%		1
R204	J707385P153	RES MFLM 1/8W 15K 5%		1
R205	J707385P472	RES MFLM 1/8W 4K7 5%		1
R206	J707385P272	RES MFLM 1/8W 2K7 5%		1
R207	J707385P563	RES MFLM 1/8W 56K 5%		1
R208	J707385P563	RES MFLM 1/8W 56K 5%		1
R209	J707385P271	RES MFLM 1/8W 270R 5%		1
R301	J707385P471	RES MFLM 1/8W 470R 5%		1
R302	J707385P391	RES MFLM 1/8W 390R 5%		1
R303	J707385P104	RES MFLM 1/8W 100K 5%		1
R304	J707385P104	RES MFLM 1/8W 100K 5%		1
R305	J707385P900	RES MFLM 1/8W 0R JUMPER		1
R306	J707385P222	RES MFLM 1/8W 2K2 5%		1

Pos	Code No.	Description		Qt
R307	J707385P681	RES MFLM 1/8W 680R 5%		1
R308	J707385P470	RES MFLM 1/8W 47R 5%		1
R309	J707385P270	RES MFLM 1/8W 27R 5%		1
R310	J707385P104	RES MFLM 1/8W 100K 5%		1
R311	J707385P560	RES MFLM 1/8W 56R 5%		1
R312	J707385P104	RES MFLM 1/8W 100K 5%		1
R314	J707385P104	RES MFLM 1/8W 100K 5%		1
R316	J707385P104	RES MFLM 1/8W 100K 5%		1
R317	J707385P182	RES MFLM 1/8W 1K8 5%		1
R318	J707385P100	RES MFLM 1/8W 10R 5%		1
R319	J707385P101	RES MFLM 1/8W 100R 5%		1
R321	J707385P270	RES MFLM 1/8W 27R 5%		1
R322	J707385P391	RES MFLM 1/8W 390R 5%		1
R323	J707385P104	RES MFLM 1/8W 100K 5%		1
R324	J707385P104	RES MFLM 1/8W 100K 5%		1
R325	J707385P100	RES MFLM 1/8W 10R 5%		1
R326	J707385P392	RES MFLM 1/8W 3K9 5%		1
R327	J707385P102	RES MFLM 1/8W 1K0 5%		1
R401	J707385P560	RES MFLM 1/8W 56R 5%		1
R402	J707385P100	RES MFLM 1/8W 10R 5%		1
R403	J707385P332	RES MFLM 1/8W 3K3 5%		1
R405	J707385P100	RES MFLM 1/8W 10R 5%		1
R406	J707385P820	RES MFLM 1/8W 82R 5%		1
R407	J707385P470	RES MFLM 1/8W 47R 5%		1
R408	J707385P470	RES MFLM 1/8W 47R 5%		1
R410	J707385P272	RES MFLM 1/8W 2K7 5%		1
R411	J707385P682	RES MFLM 1/8W 6K8 5%		1
R412	J707385P272	RES MFLM 1/8W 2K7 5%		1
R413	J707385P821	RES MFLM 1/8W 820R 5%		1
R414	J707385P220	RES MFLM 1/8W 22R 5%		1
R415	J707385P222	RES MFLM 1/8W 2K2 5%		1
R416	J707385P562	RES MFLM 1/8W 5K6 5%		1
R417	J707385P103	RES MFLM 1/8W 10K 5%		1
R418	J707385P153	RES MFLM 1/8W 15K 5%		1
R419	J707385P182	RES MFLM 1/8W 1K8 5%		1
R420	J707385P182	RES MFLM 1/8W 1K8 5%		1
R421	J707385P182	RES MFLM 1/8W 1K8 5%		1
R422	J707385P473	RES MFLM 1/8W 47K 5%		1
R423	J707385P153	RES MFLM 1/8W 15K 5%		1
R424	J708538P5	RES VAR CERM 10K 20%		1
R425	J707385P272	RES MFLM 1/8W 2K7 5%		1
R426	J707385P333	RES MFLM 1/8W 33K 5%	G1/G4	1
R426	J707385P473	RES MFLM 1/8W 47K 5% G2/G3/G5/G6		1
R427	J707385P473	RES MFLM 1/8W 47K 5% G1/G3/G4/G6		1
R427	J707385P393	RES MFLM 1/8W 47K 5%	G2/G5	1
R428	J707385P393	RES MFLM 1/8W 39K 5%	G1/G4	1
R428	J707385P563	RES MFLM 1/8W 56K 5% G2/G3/G5/G6		1
R429	J707385P104	RES MFLM 1/8W 100K 5%		1
R430	J707385P274	RES MFLM 1/8W 270K 5% G1/G2/G4/G5		1
R430	J707385P334	RES MFLM 1/8W 330K 5%	G3/G6	1
R431	J707385P473	RES MFLM 1/8W 47K 5%		1
R432	J707385P473	RES MFLM 1/8W 47K 5%		1
R433	J707385P271	RES MFLM 1/8W 270R 5%		1
R434	J707385P102	RES MFLM 1/8W 1K0 5%		1
R435	J706147P3	RES THERM PTC 250R 25%		1

Pos	Code No.	Description	Qt
R436	J707385P392	RES MFLM 1/8W 3K9 5%	1
R437	J707406P7	RES THERM NTC 220R 10%	1
R438	J707385P222	RES MFLM 1/8W 2K2 5%	1
R439	J707385P392	RES MFLM 1/8W 3K9 5%	1
R440	J707385P392	RES MFLM 1/8W 3K9 5%	1
R441	J707385P101	RES MFLM 1/8W 100R 5%	1
R442	J708538P6	RES VAR CERM 20K 20%	1
R444	J707385P473	RES MFLM 1/8W 47K 5%	1
R445	J707385P273	RES MFLM 1/8W 27K 5%	1
R446	J707385P224	RES MFLM 1/8W 220K 5%	1
R447	J707385P392	RES MFLM 1/8W 3K9 5%	1
R448	J707385P101	RES MFLM 1/8W 100R 5%	1
R449	J707385P470	RES MFLM 1/8W 47R 5%	1
R450	J707385P103	RES MFLM 1/8W 10K 5%	1
R451	J707385P332	RES MFLM 1/8W 3K3 5%	1
R452	J707385P332	RES MFLM 1/8W 3K3 5%	1
R501	J707385P122	RES MFLM 1/8W 1K2 5%	1
R502	J707385P122	RES MFLM 1/8W 1K2 5%	1
R503	J707385P122	RES MFLM 1/8W 1K2 5%	1
R504	J707385P104	RES MFLM 1/8W 100K 5%	1
R505	J707385P104	RES MFLM 1/8W 100K 5%	1
R506	J707385P104	RES MFLM 1/8W 100K 5%	1
R508	J707385P103	RES MFLM 1/8W 10K 5%	1
R509	J707385P910	RES MFLM 1/8W 1R0 20%	1
R510	J707385P332	RES MFLM 1/8W 3K3 5%	1
R512	J707385P561	RES MFLM 1/8W 560R 5%	1
R513	J707385P183	RES MFLM 1/8W 18K 5%	1
R514	J707385P472	RES MFLM 1/8W 4K7 5%	1
R515	J707385P470	RES MFLM 1/8W 47R 5%	1
R517	J707385P101	RES MFLM 1/8W 100R 5%	1
R518	J707385P470	RES MFLM 1/8W 47R 5%	1
R519	J707385P221	RES MFLM 1/8W 220R 5%	1
R529	J707385P392	RES MFLM 1/8W 3K9 5%	1
R601	J707385P122	RES MFLM 1/8W 1K2 5%	1
R602	J707385P122	RES MFLM 1/8W 1K2 5%	1
R603	J707385P122	RES MFLM 1/8W 1K2 5%	1
R604	J707385P104	RES MFLM 1/8W 100K 5%	1
R605	J707385P104	RES MFLM 1/8W 100K 5%	1
R606	J707385P104	RES MFLM 1/8W 100K 5%	1
R607	J707385P561	RES MFLM 1/8W 560R 5%	1
R608	J707385P221	RES MFLM 1/8W 220R 5%	1
R609	J707385P472	RES MFLM 1/8W 4K7 5%	1
R610	J707385P183	RES MFLM 1/8W 18K 5%	1
R611	J707385P271	RES MFLM 1/8W 270R 5%	1
R612	J707385P222	RES MFLM 1/8W 2K2 5%	1
R613	J707385P101	RES MFLM 1/8W 100R 5%	1
R614	J707385P561	RES MFLM 1/8W 560R 5%	1
R615	J707385P272	RES MFLM 1/8W 2K7 5%	1
R616	J707385P470	RES MFLM 1/8W 47R 5%	1
R617	J707385P683	RES MFLM 1/8W 68K 5%	1
R618	J707385P683	RES MFLM 1/8W 68K 5%	1
R619	J707385P104	RES MFLM 1/8W 100K 5%	1
R620	J707385P271	RES MFLM 1/8W 270R 5%	1
R621	J707385P561	RES MFLM 1/8W 560R 5%	1
R622	J707385P102	RES MFLM 1/8W 1K0 5%	1
R623	J707385P224	RES MFLM 1/8W 220K 5%	1
R624	J707385P223	RES MFLM 1/8W 22K 5%	1
R625	J707385P470	RES MFLM 1/8W 47R 5%	1
R626	J707385P100	RES MFLM 1/8W 10R 5%	1

Pos	Code No.	Description	Qt
R627	J707385P103	RES MFLM 1/8W 10K 5%	1
R628	J707385P224	RES MFLM 1/8W 220K 5%	1
R629	J707385P393	RES MFLM 1/8W 39K 5%	1
R630	J707385P100	RES MFLM 1/8W 10R 5%	1
R631	J707385P824	RES MFLM 1/8W 820K 5%	1
R632	J707385P223	RES MFLM 1/8W 22K 5%	1
R633	J707385P824	RES MFLM 1/8W 820K 5%	1
R634	J707385P123	RES MFLM 1/8W 12K 5%	1
R635	J707385P102	RES MFLM 1/8W 1K0 5%	1
R636	J707385P332	RES MFLM 1/8W 3K3 5%	1
R637	J707385P181	RES MFLM 1/8W 180R 5%	1
R638	J707385P154	RES MFLM 1/8W 150K 5%	1
R639	J707385P682	RES MFLM 1/8W 6K8 5%	1
R640	J707385P105	RES MFLM 1/8W 1M0 10%	1
R641	J707385P184	RES MFLM 1/8W 180K 5%	1
R642	J707385P184	RES MFLM 1/8W 180K 5%	1
R643	J707385P105	RES MFLM 1/8W 1M0 10%	1
R644	J707385P333	RES MFLM 1/8W 33K 5%	1
R645	J707385P103	RES MFLM 1/8W 10K 5%	1
R646	J707385P682	RES MFLM 1/8W 6K8 5%	1
R647	J707385P333	RES MFLM 1/8W 33K 5%	1
R648	J707385P823	RES MFLM 1/8W 82K 5%	1
R649	J707385P393	RES MFLM 1/8W 39K 5%	1
R650	J707385P393	RES MFLM 1/8W 39K 5%	1
R651	J707385P333	RES MFLM 1/8W 33K 5%	1
R652	J707385P222	RES MFLM 1/8W 2K2 5%	1
R653	J707385P333	RES MFLM 1/8W 33K 5%	1
R654	J707385P562	RES MFLM 1/8W 5K6 5%	1
R655	J707385P183	RES MFLM 1/8W 18K 5%	1
R656	J707385P393	RES MFLM 1/8W 39K 5%	1
R657	J707385P823	RES MFLM 1/8W 82K 5%	1
R658	J707385P154	RES MFLM 1/8W 150K 5%	1
R659	J707385P103	RES MFLM 1/8W 10K 5%	1
R660	J707385P333	RES MFLM 1/8W 33K 5%	1
R661	J707385P393	RES MFLM 1/8W 39K 5%	1
R662	J707385P473	RES MFLM 1/8W 47K 5%	1
R663	J708538P6	RES VAR CERM 20K 20%	1
R664	J707385P563	RES MFLM 1/8W 56K 5%	1
R665	J707385P224	RES MFLM 1/8W 220K 5%	1
R666	J707385P124	RES MFLM 1/8W 120K 5%	1
R667	J707385P124	RES MFLM 1/8W 120K 5%	1
R668	J707385P122	RES MFLM 1/8W 1K2 5%	1
R669	J707385P221	RES MFLM 1/8W 220R 5%	1
R670	J707385P103	RES MFLM 1/8W 10K 5%	1
R671	J707385P562	RES MFLM 1/8W 5K6 5%	1
R672	J707385P822	RES MFLM 1/8W 8K2 5%	1
R673	J707385P822	RES MFLM 1/8W 8K2 5%	1
R674	J707385P101	RES MFLM 1/8W 100R 5%	1
R675	J708538P5	RES VAR CERM 10K 20%	1
R676	J707385P102	RES MFLM 1/8W 1K0 5%	1
R677	J708538P5	RES VAR CERM 10K 20%	1
R678	J707385P470	RES MFLM 1/8W 47R 5%	1
R679	J707385P821	RES MFLM 1/8W 820R 5%	1
R680	J708538P6	RES VAR CERM 20K 20%	1
R681	J707385P223	RES MFLM 1/8W 22K 5%	1
R682	J707385P152	RES MFLM 1/8W 1K5 5%	1
R683	J707385P223	RES MFLM 1/8W 22K 5%	1
R684	J707385P183	RES MFLM 1/8W 18K 5%	1
R685	J707385P183	RES MFLM 1/8W 18K 5%	1

Pos	Code No.	Description	Qt
R686	J707385P103	RES MFLM 1/8W 10K 5%	1
R687	J707385P103	RES MFLM 1/8W 10K 5%	1
R689	J707385P105	RES MFLM 1/8W 1MO 10%	1
R690	J707385P124	RES MFLM 1/8W 120K 5%	1
R691	J707385P273	RES MFLM 1/8W 27K 5%	1
R692	J707385P223	RES MFLM 1/8W 22K 5%	1
R693	J707385P105	RES MFLM 1/8W 1MO 10%	1
R694	J707385P223	RES MFLM 1/8W 22K 5%	1
R695	J707385P105	RES MFLM 1/8W 1MO 10%	1
R696	J707385P223	RES MFLM 1/8W 22K 5%	1
R697	J707385P105	RES MFLM 1/8W 1MO 10%	1
R698	J707385P103	RES MFLM 1/8W 10K 5%	1
R701	J708666P1	RES THERM NTC 5K 2%	1
R702	A701250P413	RES MFLM 1/4W 133K 1%	1
R703	A701250P213	RES MFLM 1/4W 1K33 1%	1
R704	A701250P325	RES MFLM 1/4W 17K8 1%	1
R705	J708666P2	RES THERM NTC 20K 2%	1
R706	J708666P2	RES THERM NTC 20K 2%	1
R707	J707385P104	RES MFLM 1/8W 100K 5%	1
R708	J707385P105	RES MFLM 1/8W 1MO 10%	1
R709	J707385P181	RES MFLM 1/8W 180R 5%	1
R710	J707385P101	RES MFLM 1/8W 100R 5%	1
R711	J707385P223	RES MFLM 1/8W 22K 5%	1
R712	J707385P154	RES MFLM 1/8W 150K 5%	1
R713	J707385P821	RES MFLM 1/8W 820R 5%	1
R714	J707385P104	RES MFLM 1/8W 100K 5%	1
U100	J708165P2	IC LIN OP-AMP 324	1
U201	J708333P1	IC LIN VR FIX 4785	1
U401	J707449P1	IC LIN IF-AMP 3357	1
U402	M905766G1	INT CKT SQ 4002 G1/G2/G4/G5	1
U402	M905766G2	INT CKT SQ 4003 G3/G6	1
U601	J707859P1	IC LIN OP-AMP 204	1
U602	J707859P1	IC LIN OP-AMP 204	1
U603	J707859P1	IC LIN OP-AMP 204	1
U604	J707859P1	IC LIN OP-AMP 204	1
U606	J707243P1	IC DIG REG 4094	1
U607	J707374P3	IC PLL PRESC 12017	1
U608	B800902P1	IC PLL SYN CUSTOM DES	1
U609	J707859P1	IC LIN OP-AMP 204	1
U610	J708503P2	IC LIN CMPAR LM 339	1
U615	J708621P2	CPLR OPTO PC 827	1
U616	J708503P2	IC LIN CMPAR LM 339	1
W001	A700184P1	RES WIRE JMPR OR JUMPER	1
W003	J707256P1	COIL FIX	1
W004	J707256P1	COIL FIX	1
W005	J708717P1	STRAP	1
W006	J709241P1	STRAP	1
W007	J709241P1	STRAP	1
Y401	J708426P1	CRYSTAL UNIT 44.5450MHZ	1
Y701	J707567P19	CRYSTAL UNIT 7.4000MHZ	1
Z401	J708330P1	FLTR CRY 45.0 +/-7.5KHz G1/G4	1
Z401	J708330P2	FLTR CRY 45.0 +/-6.0KHz G2/G5	1
Z401	J708330P3	FLTR CRY 45.0 +/-3.75KHz G3/G6	1
Z402	J707446P1	FLTR CER 455K +/-10KHz G1/G4	1
Z402	J707446P3	FLTR CER 455K +/-7.5KHz G2/G5	1
Z402	J707446P4	FLTR CER 455K +/-4-5KHz G3/G6	1
Z403	J707446P1	FLTR CER 455K +/-10KHz G1/G4	1
Z403	J707446P3	FLTR CER 455K +/-7.5KHz G2/G5	1
Z403	J707446P4	FLTR CER 455K +/-4.5KHz G3/G6	1

Pos	Code No.	Description	Qt
	M905762P1R2	BD PW G1/G2/G3 *	1
	M905762P2R2	BD PW G4/G5/G6 *	1
		NON REFERENCED ITEMS:	
	J708966G1	HEAT SINK MODF	1
	K805569G2	SHIELD METALLIZED	1
	J706281P6	CORE SCREW FERR U 10	8
	J708561P3	COIL FIXED	1
	J708561P3	COIL FIXED	1
	J708561P3	COIL FIXED	1
	J706804P3	WASH INS CRYS FOR HC-45/U	2
	J706804P2	WASH INS CRYS FOR HC-18/U	2

COMPONENTS REVISED SINCE LAST EDITION ARE MARKED ■

Pos	Code No	Description	Qt
	M905761G1	RF6112S25 CH. SPAC. 25kHz/25W OUT	
	M905761G2	RF6113S25 CH. SPAC. 20kHz/25W OUT	
	M905761G3	RF6114S25 CH. SPAC. 12.5kHz/25W OUT	
	M905761G4	RF6112S6 CH. SPAC. 25kHz/6W OUT	
	M905761G5	RF6113S6 CH. SPAC. 20kHz/6W OUT	
	M905761G6	RF6114S6 CH. SPAC. 12.5kHz/6W OUT	
C000	J707438P8	CAP CER CL2 3N3 10%	1
C001	J707809P5	CAP CER NPO 2P2 .25P G1	1
C100	J707809P10	CAP CER NPO 5P6 .25P	1
C101	J707438P4	CAP CER CL2 680P 10%	1
C102	J707809P8	CAP CER NPO 3P9 .25P	1
C103	J707809P27	CAP CER NPO 150P 5%	1
C104	J707809P19	CAP CER NPO 33P 5%	1
C105	J707809P13	CAP CER NPO 10P 5%	1
C106	J707438P14	CAP CER CL2 10N 10%	1
C107	J707809P25	CAP CER NPO 100P 5%	1
C108	J707809P22	CAP CER NPO 56P 5%	1
C109	J707809P17	CAP CER NPO 22P 5%	1
C110	J707438P14	CAP CER CL2 10N 10%	1
C111	J707809P25	CAP CER NPO 100P 5%	1
C112	J707438P4	CAP CER CL2 680P 10%	1
C113	J707809P21	CAP CER NPO 47P 5%	1
C114	J707809P25	CAP CER NPO 100P 5%	1
C115	J707809P24	CAP CER NPO 82P 5%	1
C116	J707438P14	CAP CER CL2 10N 10%	1
C117	J707809P26	CAP CER NPO 120P 5%	1
C118	J707438P14	CAP CER CL2 10N 10%	1
C119	J707438P4	CAP CER CL2 680P 10%	1
C120	J707809P23	CAP CER NPO 68P 5%	1
C121	J707809P23	CAP CER NPO 68P 5%	1
C122 ■	A700006P34	CAP MICA 100P 5%	1
C123	J707438P14	CAP CER CL2 10N 10%	1
C124	J707809P26	CAP CER NPO 120P 5%	1
C125	J707438P4	CAP CER CL2 680P 10%	1
C126	J707438P14	CAP CER CL2 10N 10%	1
C127	J707353P6	CAP ELECT 4U7 25V	1
C128	J707809P27	CAP CER NPO 150P 5%	1
C129	J707809P27	CAP CER NPO 150P 5%	1
C130	A700006P32	CAP MICA 82P 5% G1/G2/G3	1
C130	A700006P30	CAP MICA 68P 5% G4/G5/G6	1
C131	A700006P41	CAP MICA 180P 5% G1/G2/G3	1
C131 ■	A700006P32	CAP MICA 82P 5% G4/G5/G6	1
C132	A700006P41	CAP MICA 180P 5% G1/G2/G3	1
C133	J707438P26	CAP CER CL2 100N 10% G1/G2/G3	1
C134	J707809P26	CAP CER NPO 120P 5% G1/G2/G3	1
C135	J707438P4	CAP CER CL2 680P 10%	1
C136	A700006P26	CAP MICA 47P 5% G1/G2/G3	1
C137	A700006P34	CAP MICA 100P 5% G1/G2/G3	1
C138	J707809P27	CAP CER NPO 150P 5%	1
C139	J707809P27	CAP CER NPO 150P 5%	1
C140	J707809P27	CAP CER NPO 150P 5%	1
C141	J707809P27	CAP CER NPO 150P 5%	1
C142	A700006P6	CAP MICA 10P 5%	1
C143	A700006P22	CAP MICA 36P 5%	1
C144	A700006P22	CAP MICA 36P 5%	1
C145	A700006P11	CAP MICA 15P 5%	1
C146	J707438P4	CAP CER CL2 680P 10%	1
C147	J707438P4	CAP CER CL2 680P 10%	1
C148	J707438P4	CAP CER CL2 680P 10%	1
C149	J707438P4	CAP CER CL2 680P 10%	1
C150	J707809P1	CAP CER NPO 1P0 .25P	1
C151	J707809P1	CAP CER NPO 1P0 .25P	1
C152	J707438P4	CAP CER CL2 680P 10%	1
C153	J707438P4	CAP CER CL2 680P 10%	1
C154	J707438P4	CAP CER CL2 680P 10%	1
C155	J707438P4	CAP CER CL2 680P 10%	1
C156	J707353P3	CAP ELECT 0U47 50V	1
C157	J707438P4	CAP CER CL2 680P 10%	1
C158	J707438P4	CAP CER CL2 680P 10%	1
C159	J707438P14	CAP CER CL2 10N 10%	1
C160	J707438P4	CAP CER CL2 680P 10%	1
C161	J707438P14	CAP CER CL2 10N 10%	1
C162	J707438P14	CAP CER CL2 10N 10%	1
C163	J707438P26	CAP CER CL2 100N 10%	1
C164	J707438P4	CAP CER CL2 680P 10%	1
C165	J707438P4	CAP CER CL2 680P 10%	1
C166	J707438P4	CAP CER CL2 680P 10%	1
C167 ■	A701413P34	CAP MICA 100P 5% G1/G2/G3	1
C167	A701413P38	CAP MICA 150P 5% G4/G5/G6	1
C168	A700006P28	CAP MICA 56P 5% G1/G2/G3	1
C168	A700006P32	CAP MICA 82P 5% G4/G5/G6	1
C169	A700006P9	CAP MICA 13P 5% G1/G2/G3	1
C169	A700006P22	CAP MICA 36P 5% G4/G5/G6	1
C170	J707809P8	CAP CER NPO 3P9 .25P G1/G2/G3	1
C170	J707809P13	CAP CER NPO 10P 5% G4/G6	1
C170	A700006P22	CAP MICA 36P 5% G5	1
C201	J707438P26	CAP CER CL2 100N 10%	1
C202	J707444P8	CAP TA SOL 22U 16V	1
C203	J707444P6	CAP TA SOL 4U7 35V	1
C204	J707436P77	CAP CER NPO 470P 5%	1
C205	J707412P9	CAP PYES 100N 10%	1
C301	J707436P3	CAP CER NPO 1P5 .25P	1
C302	J707438P5	CAP CER CL2 1N 10%	1
C304	J707436P8	CAP CER NPO 3P9 .25P	1
C305	J707436P21	CAP CER NPO 15P 5%	1
C306	J707483P1	CAP PHEN 0P47 5%	1
C307	J707438P5	CAP CER CL2 1N 10% G1/G2/G3	1
C307	J707438P4	CAP CER CL2 680P 10% G4/G5/G6	1
C309	J707436P21	CAP CER NPO 15P 5%	1
C310	J707438P5	CAP CER CL2 1N 10%	1
C311	J707438P5	CAP CER CL2 1N 10%	1
C312	J707436P87	CAP CER NPO 1N2 5%	1
C314	J707436P5	CAP CER NPO 2P2 .25P	1
C315	J707438P5	CAP CER CL2 1N 10%	1
C316	J707436P5	CAP CER NPO 2P2 .25P	1
C317	J707444P2	CAP TA SOL 0U22 35V	1
C318	J707438P5	CAP CER CL2 1N 10%	1
C319	J707436P21	CAP CER NPO 15P 5%	1
C320	J707438P5	CAP CER CL2 1N 10%	1
C322	J707483P7	CAP PHEN 1P00 5%	1
C323	J707483P5	CAP PHEN 0P68 5%	1
C324	J707483P4	CAP PHEN 0P56 5%	1
C325	J707438P5	CAP CER CL2 1N 10%	1
C326	J707436P21	CAP CER NPO 15P 5%	1
C328	J707436P21	CAP CER NPO 15P 5%	1
C331	J707436P21	CAP CER NPO 15P 5%	1
C332	J707436P21	CAP CER NPO 15P 5%	1
C333	J707483P13	CAP PHEN 0P22 10%	1
C335	J707438P5	CAP CER CL2 1N 10%	1
C338	J707436P11	CAP CER NPO 6P8 .25P	1
C339	J707438P5	CAP CER CL2 1N 10%	1
C340	J707438P8	CAP CER CL2 3N3 10%	1
C345	J707436P37	CAP CER NPO 33P 5%	1
C347	J707438P5	CAP CER CL2 1N 10%	1
C348	J707438P5	CAP CER CL2 1N 10%	1
C350	J707436P3	CAP CER NPO 1P5 .25P	1
C351	J707436P13	CAP CER NPO 10P 5%	1
C353	J707483P2	CAP PHEN 0P33 5%	1
C354	J707436P13	CAP CER NPO 10P 5%	1
C355	J707483P8	CAP PHEN 1P20 5%	1
C356	J707438P5	CAP CER CL2 1N 10%	1
C357	J707436P1	CAP CER NPO 1P0 .25P	1
C358	J707436P1	CAP CER NPO 1P0 .25P	1
C359	J707436P1	CAP CER NPO 1P0 .25P	1
C401	J707438P8	CAP CER CL2 3N3 10%	1
C402	J707438P8	CAP CER CL2 3N3 10%	1
C403	J707438P8	CAP CER CL2 3N3 10%	1
C404	J707436P9	CAP CER NPO 4P7 .25P	1
C405	J707438P26	CAP CER CL2 100N 10%	1
C406	J707436P10	CAP CER NPO 5P6 .25P	1
C407	J707436P9	CAP CER NPO 4P7 .25P	1
C408	J707438P5	CAP CER CL2 1N 10%	1
C409	J707438P8	CAP CER CL2 3N3 10%	1
C410	J707444P8	CAP TA SOL 22U 16V	1
C411	J707438P26	CAP CER CL2 100N 10%	1
C412	J707438P26	CAP CER CL2 100N 10%	1
C413	J707436P21	CAP CER NPO 15P 5%	1
C414	J707438P8	CAP CER CL2 3N3 10%	1
C415	J707438P8	CAP CER CL2 3N3 10%	1
C416	J708702P16	CAP CER N750 18P 5%	1
C417	J707436P49	CAP CER NPO 56P 5%	1
C418	J707438P14	CAP CER CL2 10N 10%	1
C419	J707438P26	CAP CER CL2 100N 10%	1
C420	J707438P14	CAP CER CL2 10N 10%	1
C421	J707438P26	CAP CER CL2 100N 10%	1
C422	J707438P26	CAP CER CL2 100N 10%	1
C423	J707436P13	CAP CER NPO 10P 5%	1
C424	J707438P8	CAP CER CL2 3N3 10%	1
C425	J707412P13	CAP PYES 470N 10%	1
C426	J707436P93	CAP CER NPO 2N2 5%	1
C427	J707436P73	CAP CER NPO 330P 5%	1
C428 ■	J707436P71	CAP CER NPO 270P 5% G1/G2/G4/G5	1
C428 ■	J707436P69	CAP CER NPO 220P 5% G3/G6	1

DATE: 12/ 8/1988

Pos	Code No	Description	Qt
C429	J707438P14	CAP CER CL2 10N 10%	1
C430	J707444P8	CAP TA SOL 22U 16V	1
C431	J707444P8	CAP TA SOL 22U 16V	1
C432	J707438P26	CAP CER CL2 100N 10%	1
C433	J707438P26	CAP CER CL2 100N 10%	1
C434	J707438P8	CAP CER CL2 3N3 10%	1
C435	J707436P1	CAP CER NPO 1P0 .25P	1
C436	J707438P26	CAP CER CL2 100N 10%	1
C501	J707412P11	CAP PYES 220N 10%	1
C502	J707412P11	CAP PYES 220N 10%	1
C503	J707412P11	CAP PYES 220N 10%	1
C504	A700235P7	CAP CER N150 3P3 .25P	1
C505	A700235P4	CAP CER N150 1P8 .25P	1
C506	A700235P12	CAP CER N150 8P2 .25P	1
C507	A700235P14	CAP CER N150 12P 5%	1
C508	A700235P32	CAP CER N150 11P 5%	1
C509	A700235P10	CAP CER N150 5P6 .25P	1
C510	A700235P16	CAP CER N150 18P 5%	1
C512	A700235P2	CAP CER NPO 1P2 .25P	1
C513	J707438P3	CAP CER CL2 470P 10%	1
C515	J707436P12	CAP CER NPO 8P2 .25P	1
C516	J707436P11	CAP CER NPO 6P8 .25P	1
C517	J707444P6	CAP TA SOL 4U7 35V	1
C518	J707436P3	CAP CER NPO 1P5 .25P	1
C519	J707438P3	CAP CER CL2 470P 10%	1
C520	J707436P5	CAP CER NPO 2P2 .25P	1
C521	J707436P17	CAP CER NPO 12P 5%	1
C522	J707438P3	CAP CER CL2 470P 10%	1
C523	J707436P5	CAP CER NPO 2P2 .25P	1
C524	J707438P3	CAP CER CL2 470P 10%	1
C525	J707438P3	CAP CER CL2 470P 10%	1
C526	J707438P3	CAP CER CL2 470P 10%	1
C527	J707438P3	CAP CER CL2 470P 10%	1
C528	J707438P3	CAP CER CL2 470P 10%	1
C540	J707438P3	CAP CER CL2 470P 10%	1
C541	J707438P3	CAP CER CL2 470P 10%	1
C542	J707438P3	CAP CER CL2 470P 10%	1
C543	J707438P3	CAP CER CL2 470P 10%	1
C544	J707438P3	CAP CER CL2 470P 10%	1
C545	J707438P3	CAP CER CL2 470P 10%	1
C601	J707412P11	CAP PYES 220N 10%	1
C602	J707412P11	CAP PYES 220N 10%	1
C603	J707412P11	CAP PYES 220N 10%	1
C604	A700235P5	CAP CER N150 2P2 .25P	1
C605	A700235P5	CAP CER N150 2P2 .25P	1
C606	A700235P8	CAP CER N150 3P9 .25P	1
C607	A700235P10	CAP CER N150 5P6 .25P	1
C608	A700235P11	CAP CER N150 6P8 .25P	1
C609	A700235P36	CAP CER N150 7P5 .25P	1
C610	A700235P12	CAP CER N150 8P2 .25P	1
C611	J707436P7	CAP CER NPO 3P3 .25P	1
C612	J707436P9	CAP CER NPO 4P7 .25P	1
C613	J707444P6	CAP TA SOL 4U7 35V	1
C614	J707436P1	CAP CER NPO 1P0 .25P	1
C615	J707436P77	CAP CER NPO 470P 5%	1
C616	J707438P3	CAP CER CL2 470P 10%	1
C617	J707436P1	CAP CER NPO 1P0 .25P	1
C618	J707436P10	CAP CER NPO 5P6 .25P	1
C619	J707438P3	CAP CER CL2 470P 10%	1
C620	J707436P5	CAP CER NPO 2P2 .25P	1
C621	J707438P3	CAP CER CL2 470P 10%	1
C624	J707436P69	CAP CER NPO 220P 5%	1
C625	J707438P26	CAP CER CL2 100N 10%	1
C626	J707438P5	CAP CER CL2 1N 10%	1
C627	J707438P14	CAP CER CL2 10N 10%	1
C628	J707436P93	CAP CER NPO 2N2 5%	1
C629	J707436P65	CAP CER NPO 150P 5%	1
C630	J707436P69	CAP CER NPO 220P 5%	1
C631	J707436P69	CAP CER NPO 220P 5%	1
C632	J707438P26	CAP CER CL2 100N 10%	1
C633	J707444P17	CAP TA SOL 47U 10V	1
C634	J707438P26	CAP CER CL2 100N 10%	1
C635	J707438P3	CAP CER CL2 470P 10%	1
C636	J707444P17	CAP TA SOL 47U 10V	1
C637	J707438P26	CAP CER CL2 100N 10%	1
C639	J707438P8	CAP CER CL2 3N3 10%	1
C640	J707412P9	CAP PYES 100N 10%	1
C641	J707412P13	CAP PYES 470N 10%	1
C642	J707412P13	CAP PYES 470N 10%	1
C643	J707438P22	CAP CER CL2 47N 10%	1
C644	J707436P6	CAP CER NPO 2P7 .25P	1
C652	J707438P5	CAP CER CL2 1N 10%	1
C653	J707444P6	CAP TA SOL 4U7 35V	1

Pos	Code No	Description	Qt
C656	J707436P77	CAP CER NPO 470P 5%	1
C657	J707438P3	CAP CER CL2 470P 10%	1
C659	J707438P5	CAP CER CL2 1N 10%	1
C660	J707438P12	CAP CER CL2 6N8 5%	1
C665	J707438P3	CAP CER CL2 470P 10%	1
C666	J707438P3	CAP CER CL2 470P 10%	1
C667	J707438P3	CAP CER CL2 470P 10%	1
C668	J707436P61	CAP CER NPO 100P 5%	1
C701	J707436P29	CAP CER NPO 22P 5%	1
C702	J708702P22	CAP CER N750 56P 5%	1
C703	J707436P69	CAP CER NPO 220P 5%	1
C704	J707436P13	CAP CER NPO 10P 5%	1
C705	J707438P5	CAP CER CL2 1N 10%	1
C706	J707438P14	CAP CER CL2 10N 10%	1
C707	J707436P10	CAP CER NPO 5P6 .25P	1
C708	J707438P14	CAP CER CL2 10N 10%	1
C709	J707438P14	CAP CER CL2 10N 10%	1
D100	A700047P3	DIO SI SIG 1N6263	1
D101	J706892P1	DIO SI PIN UM 9401	1
D102	J706892P1	DIO SI PIN UM 9401	1
D103	J707390P1	DIO SI SIG BAV 74	1
D300	J707928P2	DIO SI CAP BB 809	1
D301	J707928P2	DIO SI CAP BB 809	1
D302	J707928P2	DIO SI CAP BB 809	1
D303	J707928P2	DIO SI CAP BB 809	1
D304	J707928P2	DIO SI CAP BB 809	1
D305	J707928P2	DIO SI CAP BB 809	1
D306	J707928P2	DIO SI CAP BB 809	1
D307	J707928P2	DIO SI CAP BB 809	1
D401	A700025P8	DIO SI ZENR 6V8 5% 0.4W	1
D501	J706007P1	DIO SI CAP BB 505B	1
D502	J706007P1	DIO SI CAP BB 505B	1
D503	J706007P1	DIO SI CAP BB 505B	1
D504	J707928P2	DIO SI CAP BB 809	1
D505	J707769P1	DIO SI CAP BBY 31	1
D601	J706007P1	DIO SI CAP BB 505B	1
D602	J706007P1	DIO SI CAP BB 505B	1
D603	J706007P1	DIO SI CAP BB 505B	1
D604	J706007P1	DIO SI CAP BB 505B	1
D605	J707389P1	DIO SI SIG BAV 99	1
D606	J708681P1	DIO SI SIG BAW 56	1
D607	J707390P1	DIO SI SIG BAV 74	1
D608	J707390P1	DIO SI SIG BAV 74	1
D610	J708681P1	DIO SI SIG BAW 56	1
D701	J707928P2	DIO SI CAP BB 809	1
D702	J707390P1	DIO SI SIG BAV 74	1
L100	A700024P1	COIL RF FIX 0.1UH 10%	1
L101	A700024P1	COIL RF FIX 0.1UH 10%	1
L102	K805653G5	COIL ASM 5 1/2T	1
L103	J707339G1	COIL FIX ASM	1
L104	A700024P1	COIL RF FIX 0.1UH 10%	1
L105	K805653G1	COIL ASM 1 1/2T	1
L106	J707256P2	COIL FIX	1
L107	J707339G1	COIL FIX ASM	1
L108	K805653G2	COIL ASM 2 1/2T G2/G2/G3	1
L108	K805653G6	COIL ASM 6 1/2T G4/G5/G6	1
L109	J707339G1	COIL FIX ASM	1
L110	J707256P1	COIL FIX G1/G2/G3	1
L110	J707256P2	COIL FIX G4/G5/G6	1
L112	J707339G1	COIL FIX ASM	1
L113	A700024P13	COIL RF FIX 1.0UH 10%	1
L114	K805653G2	COIL ASM 2 1/2T G1/G2/G3	1
L114	K805653G4	COIL ASM 4 1/2T G4/G5/G6	1
L115	J709287P1	CORE TOR FERR	1
L116	J709287P1	CORE TOR FERR G1/G2/G3	1
L117	K805653G4	COIL ASM 4 1/2T G1/G2/G3	1
L118	J707339G1	COIL FIX ASM G1/G2/G3	1
L119	K805653G4	COIL ASM 4 1/2T G1/G2/G3	1
L120	J707256P2	COIL FIX G1/G2/G3	1
L120	J707256P1	COIL FIX G4/G5/G6	1
L121	A700024P13	COIL RF FIX 1.0UH 10%	1
L122	A700024P25	COIL RF FIX 10UH 10%	1
L123 ■	A700024P14	COIL RF FIX 1.2UH 10%	1
L124	K805653G5	COIL ASM 5 1/2T	1
L125	K805653G6	COIL ASM 6 1/2T	1
L126	K805653G5	COIL ASM 5 1/2T	1
L127	A700024P25	COIL RF FIX 10UH 10%	1
L128	A700024P25	COIL RF FIX 10UH 10%	1
L129	A700024P13	COIL RF FIX 1.0UH 10%	1
L130	K805653G2	COIL ASM 2 1/2T G1/G2/G3	1
L130	K805653G1	COIL ASM 1 1/2T G4/G5/G6	1
L131	K805653G3	COIL ASM 3 1/2T G1/G2/G3	1
L131	K805653G2	COIL ASM 2 1/2T G4/G5/G6	1

DATE: 12/ 8/1988

Pos	Code No	Description	Qt
L301	J709099P13	COIL RF VAR 4-1/2T TAP	1
L302	J709099P13	COIL RF VAR 4-1/2T TAP	1
L303	J707486P6	COIL RF FIX 0.47UH 10%	1
L304	J709099P2	COIL RF VAR 4-1/2T TAP	1
L305	J707486P2	COIL RF FIX 3.3UH 10%	1
L306	J709099P7	COIL RF VAR 4-1/2T TAP	1
L308	J709099P6	COIL RF VAR 4-1/2T TAP	1
L310	J709099P2	COIL RF VAR 4-1/2T TAP	1
L312	J708428P2	COIL RF VAR 45 MHZ	1
L313	J709099P4	COIL RF VAR 3-1/2T TAP	1
L314	J709099P3	COIL RF VAR 3-1/2T TAP	1
L401	J707486P10	COIL RF FIX 1.5UH 10%	1
L403	K805570G2	COIL ASM	1
L404	K805570G1	COIL ASM	1
L405	J708428P1	COIL RF VAR 45 MHz	1
L406	K805570G3	COIL ASM	1
L407	A700024P25	COIL RF FIX 10UH 10%	1
L408	J708428P2	COIL RF VAR 45 MHz	1
L409	J707431P1	COIL RF VAR 455KHz 25%	1
L410	J707431P1	COIL RF VAR 455KHz 25%	1
L501	A700024P13	COIL RF FIX 1.0UH 10%	1
L502	A700024P13	COIL RF FIX 1.0UH 10%	1
L503	A700024P13	COIL RF FIX 1.0UH 10%	1
L504	A700024P13	COIL RF FIX 1.0UH 10%	1
L505	L855671P1	COIL RADIO FREQUENCY	1
L506	A700024P13	COIL RF FIX 1.0UH 10%	1
L507	A700024P13	COIL RF FIX 1.0UH 10%	1
L508	A700024P4	COIL RF FIX 0.18UH 10%	1
L601	A700024P13	COIL RF FIX 1.0UH 10%	1
L602	A700024P13	COIL RF FIX 1.0UH 10%	1
L603	A700024P13	COIL RF FIX 1.0UH 10%	1
L604	A700024P13	COIL RF FIX 1.0UH 10%	1
L605	L855671P1	COIL RADIO FREQUENCY	1
L606	A700024P13	COIL RF FIX 1.0UH 10%	1
L607	A700024P13	COIL RF FIX 1.0UH 10%	1
L608	A700024P2	COIL RF FIX 0.12UH 10%	1
L609	K805653G10	COIL RF FIXED 10 1/2T	1
L701	K805570G4	COIL ASM	1
L702	A700024P43	COIL RF FIX 330UH 10%	1
L703	A700024P27	COIL RF FIX 15UH 10%	1
P102	J707064P112	CONN PWB FEM 12-CKT	1
P105	A701883P4	CONN PWB FEM RECP	1
Q100	J7[illegible]3P1	TSTR NPN SI BFR 53	1
Q101	J707388P1	TSTR NPN SI BFR 53	1
Q102	A701940P1	TSTR NPN SI RF-PWR 0.4W	1
Q103	A700063P1	TSTR NPN SI RF-PWR 2.0W	1
Q104	J709163P1	TSTR NPN SI RF-PWR 10W	1
Q105	J708133P1	TSTR NPN SI RF-PWR 28W G1/G2/G3	1
Q106	J707432P1	TSTR PNP SI BCX 18	1
Q107	J707386P1	TSTR NPN SI BCW 32	1
Q108	J708406P1	TSTR NPN SI BD 233	1
Q109	J707386P1	TSTR NPN SI BCW 32	1
Q201	J707435P1	TSTR PNP SI BC 369	1
Q202	J707386P1	TSTR NPN SI BCW 32	1
Q203	J707432P1	TSTR PNP SI BCX 18	1
Q204	J707386P1	TSTR NPN SI BCW 32	1
Q301	J706011P2	TSTR NPN SI BFR 91A	1
Q302	J708315P1	TSTR JFET SI 2N5245	1
Q401	J707817P1	TSTR JFET SI J 309	1
Q402	J707817P1	TSTR JFET SI J 309	1
Q403	J707419P1	TSTR JFET SI BF511	1
Q404	J708418P1	TSTR NPN SI BFS 20	1
Q405	J708418P1	TSTR NPN SI BFS 20	1
Q406	J708418P1	TSTR NPN SI BFS 20	1
Q407	J707386P1	TSTR NPN SI BCW 32	1
Q408	J707387P1	TSTR PNP SI BCW 30	1
Q501	J707817P1	TSTR JFET SI J 309	1
Q502	J707388P1	TSTR NPN SI BFR 53	1
Q601	J707817P1	TSTR JFET SI J 309	1
Q602	J707388P1	TSTR NPN SI BFR 53	1
Q603	J708318P1	TSTR PNP SI BFT 92	1
Q604	J707433P1	TSTR MFET SI BF 989	1
Q605	J707386P1	TSTR NPN SI BCW 32	1
Q612	J707386P1	TSTR NPN SI BCW 32	1
Q613	J707386P1	TSTR NPN SI BCW 32	1
Q701	J707419P1	TSTR JFET SI BF511	1
Q702	J707387P1	TSTR PNP SI BCW 30	1
R000	J707385P332	RES MFLM 1/8W 3K3 5%	1
R100	J707385P122	RES MFLM 1/8W 1K2 5%	1
R101	J707385P472	RES MFLM 1/8W 4K7 5%	1
R102	J707385P270	RES MFLM 1/8W 27R 5%	1
R103	J707385P470	RES MFLM 1/8W 47R 5%	1
R104	J707385P102	RES MFLM 1/8W 1K0 5%	1

Pos	Code No	Description	Qt
R105	J707385P182	RES MFLM 1/8W 1K8 5%	1
R106	J707385P470	RES MFLM 1/8W 47R 5%	1
R107	J707385P680	RES MFLM 1/8W 68R 5%	1
R108	J707385P820	RES MFLM 1/8W 82R 5%	1
R109	J707385P100	RES MFLM 1/8W 10R 5%	1
R110	J707385P100	RES MFLM 1/8W 10R 5%	1
R111	J707385P100	RES MFLM 1/8W 10R 5%	1
R112	J707385P947	RES MFLM 1/8W 4R7 20%	1
R113	J707385P100	RES MFLM 1/8W 10R 5%	1
R114	J707385P947	RES MFLM 1/8W 4R7 20%	1
R115	J707385P100	RES MFLM 1/8W 10R 5% G1/G2/G3	1
R116	J707385P220	RES MFLM 1/8W 22R 5% G1/G2/G3	1
R117	J707385P220	RES MFLM 1/8W 22R 5% G1/G2/G3	1
R118	J707385P473	RES MFLM 1/8W 47K 5%	1
R119	J707385P820	RES MFLM 1/8W 82R 5%	1
R120	J707385P820	RES MFLM 1/8W 82R 5%	1
R121	J707385P333	RES MFLM 1/8W 33K 5%	1
R122	J707385P221	RES MFLM 1/8W 220R 5%	1
R123	J707385P221	RES MFLM 1/8W 220R 5%	1
R132	J708538P9	RES VAR CERM 200K 20%	1
R133	J708538P4	RES VAR CERM 5K0 20%	1
R134	J707385P100	RES MFLM 1/8W 10R 5%	1
R135	J706147P2	RES THERM PTC 80R 25%	1
R136	J707385P682	RES MFLM 1/8W 6K8 5%	1
R137	J707385P223	RES MFLM 1/8W 22K 5%	1
R138	J707385P472	RES MFLM 1/8W 4K7 5%	1
R139	J707385P472	RES MFLM 1/8W 4K7 5%	1
R140	J707385P333	RES MFLM 1/8W 33K 5%	1
R141	J707385P333	RES MFLM 1/8W 33K 5%	1
R142	J707385P104	RES MFLM 1/8W 100K 5%	1
R143	J707385P222	RES MFLM 1/8W 2K2 5%	1
R144	J707385P222	RES MFLM 1/8W 2K2 5%	1
R145	J707385P682	RES MFLM 1/8W 6K8 5%	1
R146	J707385P273	RES MFLM 1/8W 27K 5%	1
R147	J707385P104	RES MFLM 1/8W 100K 5%	1
R148	J707385P123	RES MFLM 1/8W 12K 5%	1
R149	J707385P472	RES MFLM 1/8W 4K7 5%	1
R150	J707385P391	RES MFLM 1/8W 390R 5%	1
R151	J707385P683	RES MFLM 1/8W 68K 5%	1
R152	J707385P104	RES MFLM 1/8W 100K 5%	1
R153	J707385P221	RES MFLM 1/8W 220R 5%	1
R154	J707385P274	RES MFLM 1/8W 270K 5%	1
R155	J707385P222	RES MFLM 1/8W 2K2 5%	1
R156	J707385P102	RES MFLM 1/8W 1K0 5%	1
R157	J707385P392	RES MFLM 1/8W 3K9 5%	1
R201	J707385P561	RES MFLM 1/8W 560R 5%	1
R202	J707385P271	RES MFLM 1/8W 270R 5%	1
R203	J707385P153	RES MFLM 1/8W 15K 5%	1
R204	J707385P153	RES MFLM 1/8W 15K 5%	1
R205	J707385P472	RES MFLM 1/8W 4K7 5%	1
R206	J707385P272	RES MFLM 1/8W 2K7 5%	1
R207	J707385P563	RES MFLM 1/8W 56K 5%	1
R208	J707385P563	RES MFLM 1/8W 56K 5%	1
R209	J707385P271	RES MFLM 1/8W 270R 5%	1
R301	J707385P471	RES MFLM 1/8W 470R 5%	1
R302	J707385P391	RES MFLM 1/8W 390R 5%	1
R303	J707385P104	RES MFLM 1/8W 100K 5%	1
R304	J707385P104	RES MFLM 1/8W 100K 5%	1
R305	J707385P900	RES MFLM 1/8W 0R JUMPER	1
R306	J707385P222	RES MFLM 1/8W 2K2 5%	1
R307	J707385P681	RES MFLM 1/8W 680R 5%	1
R308	J707385P470	RES MFLM 1/8W 47R 5%	1
R309	J707385P270	RES MFLM 1/8W 27R 5%	1
R310	J707385P104	RES MFLM 1/8W 100K 5%	1
R311	J707385P560	RES MFLM 1/8W 56R 5%	1
R312	J707385P104	RES MFLM 1/8W 100K 5%	1
R314	J707385P104	RES MFLM 1/8W 100K 5%	1
R316	J707385P104	RES MFLM 1/8W 100K 5%	1
R317	J707385P182	RES MFLM 1/8W 1K8 5%	1
R318	J707385P100	RES MFLM 1/8W 10R 5%	1
R319	J707385P101	RES MFLM 1/8W 100R 5%	1
R321	J707385P270	RES MFLM 1/8W 27R 5%	1
R322	J707385P391	RES MFLM 1/8W 390R 5%	1
R323	J707385P104	RES MFLM 1/8W 100K 5%	1
R324	J707385P104	RES MFLM 1/8W 100K 5%	1
R325	J707385P100	RES MFLM 1/8W 10R 5%	1
R326	J707385P392	RES MFLM 1/8W 3K9 5%	1
R327	J707385P102	RES MFLM 1/8W 1K0 5%	1
R401	J707385P560	RES MFLM 1/8W 56R 5%	1
R402	J707385P100	RES MFLM 1/8W 10R 5%	1
R403	J707385P332	RES MFLM 1/8W 3K3 5%	1
R405	J707385P100	RES MFLM 1/8W 10R 5%	1
R406	J707385P820	RES MFLM 1/8W 82R 5%	1

Pos	Code No	Description	Qt
R407	J707385P470	RES MFLM 1/8W 47R 5%	1
R408	J707385P470	RES MFLM 1/8W 47R 5%	1
R410	J707385P272	RES MFLM 1/8W 2K7 5%	1
R411	J707385P682	RES MFLM 1/8W 6K8 5%	1
R412	J707385P272	RES MFLM 1/8W 2K7 5%	1
R413	J707385P821	RES MFLM 1/8W 820R 5%	1
R414	J707385P220	RES MFLM 1/8W 22R 5%	1
R415	J707385P222	RES MFLM 1/8W 2K2 5%	1
R416	J707385P562	RES MFLM 1/8W 5K6 5%	1
R417	J707385P103	RES MFLM 1/8W 10K 5%	1
R418	J707385P153	RES MFLM 1/8W 15K 5%	1
R419	J707385P182	RES MFLM 1/8W 1K8 5%	1
R420	J707385P182	RES MFLM 1/8W 1K8 5%	1
R421	J707385P182	RES MFLM 1/8W 1K8 5%	1
R422	J707385P473	RES MFLM 1/8W 47K 5%	1
R423	J707385P153	RES MFLM 1/8W 15K 5%	1
R424	J708538P5	RES VAR CERM 10K 20%	1
R425	J707385P272	RES MFLM 1/8W 2K7 5%	1
R426 ■	J707385P333	RES MFLM 1/8W 33K 5% G1/G4	1
R426 ■	J707385P473	RES MFLM 1/8W 47K 5% G2/G3/G4/G6	1
R427 ■	J707385P473	RES MFLM 1/8W 47K 5% G1/G3/G4/G6	1
R427 ■	J707385P393	RES MFLM 1/8W 47K 5% G2/G5	1
R428 ■	J707385P393	RES MFLM 1/8W 39K 5% G1/G4	1
R428 ■	J707385P563	RES MFLM 1/8W 56K 5% G2/G3/G5/G6	1
R429	J707385P104	RES MFLM 1/8W 100K 5%	1
R430 ■	J707385P274	RES MFLM 1/8W 270K 5% G1/G2/G4/G5	1
R430 ■	J707385P334	RES MFLM 1/8W 330K 5% G3/G6	1
R431	J707385P473	RES MFLM 1/8W 47K 5%	1
R432	J707385P473	RES MFLM 1/8W 47K 5%	1
R433	J707385P271	RES MFLM 1/8W 270R 5%	1
R434	J707385P102	RES MFLM 1/8W 1K0 5%	1
R435	J706147P3	RES THERM PTC 250R 25%	1
R436	J707385P392	RES MFLM 1/8W 3K9 5%	1
R437	J707406P7	RES THERM NTC 220R 10%	1
R438	J707385P222	RES MFLM 1/8W 2K2 5%	1
R439	J707385P392	RES MFLM 1/8W 3K9 5%	1
R440	J707385P392	RES MFLM 1/8W 3K9 5%	1
R441	J707385P101	RES MFLM 1/8W 100R 5%	1
R442	J708538P6	RES VAR CERM 20K 20%	1
R444	J707385P473	RES MFLM 1/8W 47K 5%	1
R445	J707385P273	RES MFLM 1/8W 27K 5%	1
R446	J707385P224	RES MFLM 1/8W 220K 5%	1
R447	J707385P392	RES MFLM 1/8W 3K9 5%	1
R448	J707385P101	RES MFLM 1/8W 100R 5%	1
R449	J707385P470	RES MFLM 1/8W 47R 5%	1
R450	J707385P103	RES MFLM 1/8W 10K 5%	1
R451	J707385P332	RES MFLM 1/8W 3K3 5%	1
R501	J707385P122	RES MFLM 1/8W 1K2 5%	1
R502	J707385P122	RES MFLM 1/8W 1K2 5%	1
R503	J707385P122	RES MFLM 1/8W 1K2 5%	1
R504	J707385P104	RES MFLM 1/8W 100K 5%	1
R505	J707385P104	RES MFLM 1/8W 100K 5%	1
R506	J707385P104	RES MFLM 1/8W 100K 5%	1
R508	J707385P103	RES MFLM 1/8W 10K 5%	1
R509	J707385P910	RES MFLM 1/8W 1R0 20%	1
R510	J707385P332	RES MFLM 1/8W 3K3 5%	1
R512	J707385P561	RES MFLM 1/8W 560R 5%	1
R513	J707385P183	RES MFLM 1/8W 18K 5%	1
R514	J707385P472	RES MFLM 1/8W 4K7 5%	1
R515	J707385P470	RES MFLM 1/8W 47R 5%	1
R517	J707385P101	RES MFLM 1/8W 100R 5%	1
R518	J707385P470	RES MFLM 1/8W 47R 5%	1
R519	J707385P221	RES MFLM 1/8W 220R 5%	1
R529	J707385P392	RES MFLM 1/8W 3K9 5%	1
R601	J707385P122	RES MFLM 1/8W 1K2 5%	1
R602	J707385P122	RES MFLM 1/8W 1K2 5%	1
R603	J707385P122	RES MFLM 1/8W 1K2 5%	1
R604	J707385P104	RES MFLM 1/8W 100K 5%	1
R605	J707385P104	RES MFLM 1/8W 100K 5%	1
R606	J707385P104	RES MFLM 1/8W 100K 5%	1
R607	J707385P561	RES MFLM 1/8W 560R 5%	1
R608	J707385P221	RES MFLM 1/8W 220R 5%	1
R609	J707385P472	RES MFLM 1/8W 4K7 5%	1
R610	J707385P183	RES MFLM 1/8W 18K 5%	1
R611	J707385P271	RES MFLM 1/8W 270R 5%	1
R612	J707385P222	RES MFLM 1/8W 2K2 5%	1
R613	J707385P101	RES MFLM 1/8W 100R 5%	1
R614	J707385P561	RES MFLM 1/8W 560R 5%	1
R615	J707385P272	RES MFLM 1/8W 2K7 5%	1
R616	J707385P470	RES MFLM 1/8W 47R 5%	1
R617	J707385P683	RES MFLM 1/8W 68K 5%	1
R618	J707385P683	RES MFLM 1/8W 68K 5%	1
R619	J707385P104	RES MFLM 1/8W 100K 5%	1

Pos	Code No	Description	Qt
R620	J707385P271	RES MFLM 1/8W 270R 5%	1
R621	J707385P561	RES MFLM 1/8W 560R 5%	1
R622	J707385P102	RES MFLM 1/8W 1K0 5%	1
R623	J707385P224	RES MFLM 1/8W 220K 5%	1
R624	J707385P223	RES MFLM 1/8W 22K 5%	1
R625	J707385P470	RES MFLM 1/8W 47R 5%	1
R626	J707385P100	RES MFLM 1/8W 10R 5%	1
R627	J707385P103	RES MFLM 1/8W 10K 5%	1
R628	J707385P224	RES MFLM 1/8W 220K 5%	1
R629	J707385P393	RES MFLM 1/8W 39K 5%	1
R630	J707385P100	RES MFLM 1/8W 10R 5%	1
R631	J707385P824	RES MFLM 1/8W 820K 5%	1
R632	J707385P223	RES MFLM 1/8W 22K 5%	1
R633	J707385P824	RES MFLM 1/8W 820K 5%	1
R634	J707385P123	RES MFLM 1/8W 12K 5%	1
R635	J707385P102	RES MFLM 1/8W 1K0 5%	1
R636	J707385P332	RES MFLM 1/8W 3K3 5%	1
R637	J707385P181	RES MFLM 1/8W 180R 5%	1
R638	J707385P154	RES MFLM 1/8W 150K 5%	1
R639	J707385P682	RES MFLM 1/8W 6K8 5%	1
R640	J707385P105	RES MFLM 1/8W 1M0 10%	1
R641	J707385P184	RES MFLM 1/8W 180K 5%	1
R642	J707385P184	RES MFLM 1/8W 180K 5%	1
R643	J707385P105	RES MFLM 1/8W 1M0 10%	1
R644	J707385P333	RES MFLM 1/8W 33K 5%	1
R645	J707385P103	RES MFLM 1/8W 10K 5%	1
R646	J707385P682	RES MFLM 1/8W 6K8 5%	1
R647	J707385P333	RES MFLM 1/8W 33K 5%	1
R648	J707385P823	RES MFLM 1/8W 82K 5%	1
R649	J707385P393	RES MFLM 1/8W 39K 5%	1
R650	J707385P393	RES MFLM 1/8W 39K 5%	1
R651	J707385P333	RES MFLM 1/8W 33K 5%	1
R652	J707385P222	RES MFLM 1/8W 2K2 5%	1
R653	J707385P333	RES MFLM 1/8W 33K 5%	1
R654	J707385P562	RES MFLM 1/8W 5K6 5%	1
R655	J707385P183	RES MFLM 1/8W 18K 5%	1
R656	J707385P393	RES MFLM 1/8W 39K 5%	1
R657	J707385P823	RES MFLM 1/8W 82K 5%	1
R658	J707385P154	RES MFLM 1/8W 150K 5%	1
R659	J707385P103	RES MFLM 1/8W 10K 5%	1
R660	J707385P333	RES MFLM 1/8W 33K 5%	1
R661	J707385P393	RES MFLM 1/8W 39K 5%	1
R662	J707385P473	RES MFLM 1/8W 47K 5%	1
R663	J708538P6	RES VAR CERM 20K 20%	1
R664	J707385P563	RES MFLM 1/8W 56K 5%	1
R665	J707385P224	RES MFLM 1/8W 220K 5%	1
R666	J707385P124	RES MFLM 1/8W 120K 5%	1
R667	J707385P124	RES MFLM 1/8W 120K 5%	1
R668	J707385P122	RES MFLM 1/8W 1K2 5%	1
R669	J707385P221	RES MFLM 1/8W 220R 5%	1
R670	J707385P103	RES MFLM 1/8W 10K 5%	1
R671	J707385P562	RES MFLM 1/8W 5K6 5%	1
R672	J707385P822	RES MFLM 1/8W 8K2 5%	1
R673	J707385P822	RES MFLM 1/8W 8K2 5%	1
R674	J707385P101	RES MFLM 1/8W 100R 5%	1
R675	J708538P5	RES VAR CERM 10K 20%	1
R676	J707385P102	RES MFLM 1/8W 1K0 5%	1
R677	J708538P5	RES VAR CERM 10K 20%	1
R678	J707385P470	RES MFLM 1/8W 47R 5%	1
R679	J707385P821	RES MFLM 1/8W 820R 5%	1
R680	J708538P6	RES VAR CERM 20K 20%	1
R681	J707385P223	RES MFLM 1/8W 22K 5%	1
R682	J707385P152	RES MFLM 1/8W 1K5 5%	1
R683	J707385P223	RES MFLM 1/8W 22K 5%	1
R684	J707385P183	RES MFLM 1/8W 18K 5%	1
R685	J707385P183	RES MFLM 1/8W 18K 5%	1
R686	J707385P103	RES MFLM 1/8W 10K 5%	1
R687	J707385P103	RES MFLM 1/8W 10K 5%	1
R689	J707385P105	RES MFLM 1/8W 1M0 10%	1
R690	J707385P124	RES MFLM 1/8W 120K 5%	1
R691	J707385P273	RES MFLM 1/8W 27K 5%	1
R692	J707385P223	RES MFLM 1/8W 22K 5%	1
R693	J707385P105	RES MFLM 1/8W 1M0 10%	1
R694	J707385P223	RES MFLM 1/8W 22K 5%	1
R695	J707385P105	RES MFLM 1/8W 1M0 10%	1
R696	J707385P223	RES MFLM 1/8W 22K 5%	1
R697	J707385P105	RES MFLM 1/8W 1M0 10%	1
R698	J707385P103	RES MFLM 1/8W 10K 5%	1
R701	J708666P1	RES THERM NTC 5K 2%	1
R702	A701250P413	RES MFLM 1/4W 133K 1%	1
R703	A701250P213	RES MFLM 1/4W 1K33 1%	1
R704	A701250P325	RES MFLM 1/4W 17K8 1%	1
R705	J708666P2	RES THERM NTC 20K 2%	1

DATE: 12/ 8/1988

Pos	Code No	Description	Qt
R706	J708666P2	RES THERM NTC 20K 2%	1
R707	J707385P104	RES MFLM 1/8W 100K 5%	1
R708	J707385P105	RES MFLM 1/8W 1MO 10%	1
R709	J707385P181	RES MFLM 1/8W 180R 5%	1
R710	J707385P101	RES MFLM 1/8W 100R 5%	1
R711	J707385P223	RES MFLM 1/8W 22K 5%	1
R712	J707385P154	RES MFLM 1/8W 150K 5%	1
R713	J707385P821	RES MFLM 1/8W 820R 5%	1
R714	J707385P104	RES MFLM 1/8W 100K 5%	1
U100	J708165P2	IC LIN OP-AMP 324	1
U201	J708333P1	IC LIN VR FIX 4785	1
U401	J707449P1	IC LIN IF-AMP 3357	1
U402	M905766G1	INT CKT SQ 4002 G1/G2/G4/G5	1
U402	M905766G2	INT CKT SQ 4003 G3/G6	1
U601	J707859P1	IC LIN OP-AMP 204	1
U602	J707859P1	IC LIN OP-AMP 204	1
U603	J707859P1	IC LIN OP-AMP 204	1
U604	J707859P1	IC LIN OP-AMP 204	1
U606	J707243P1	IC DIG REG 4094	1
U607	J707374P3	IC PLL PRESC 12017	1
U608	B800902P1	IC PLL SYN CUSTOM DES	1
U609	J707859P1	IC LIN OP-AMP 204	1
U610	J708503P2	IC LIN CMPAR LM 339	1
U615	J708621P2	CPLR OPTO PC 827	1
U616	J708503P2	IC LIN CMPAR LM 339	1
W001	A700184P1	RES WIRE JMPR OR JUMPER	1
W003	J707256P1	COIL FIX	1
W004	J707256P1	COIL FIX	1
W005	J708717P1	STRAP	1
W006	J709241P1	STRAP	1
W007	J709241P1	STRAP	1
Y401	J708426P1	CRYSTAL UNIT 44.5450MHZ	1
Y701	J707567P19	CRYSTAL UNIT 7.4000MHZ	1
Z401	J708330P1	FLTR CRY 45.0 +/-7.5KHz G1/G4	1
Z401	J708330P2	FLTR CRY 45.0 +/-6.0KHz G2/G5	1
Z401	J708330P3	FLTR CRY 45.0 +/-3.75KHz G3/G6	1
Z402	J707446P1	FLTR CER 455K +/-10KHz G1/G4	1
Z402	J707446P3	FLTR CER 455K +/-7.5KHz G2/G5	1
Z402	J707446P4	FLTR CER 455K +/-4-5KHz G3/G6	1
Z403	J707446P1	FLTR CER 455K +/-10KHz G1/G4	1
Z403	J707446P3	FLTR CER 455K +/-7.5KHz G2/G5	1
Z403	J707446P4	FLTR CER 455K +/-4.5KHz G3/G6	1
	M905762P1ROG	BD PW G2/G3	1
	M905762P2ROG	BD PW G5/G6	1
		NON REFERENCE ITEMS	
	J708966G1	HEAT SINK MODF	1
	K805569G2	SHIELD METALLIZED	1
	J706281P6	CORE SCREW FERR U 10	8
	J708561P3	COIL FIXED	1
	J708561P3	COIL FIXED	1
	J708561P3	COIL FIXED	1

Pos	Code No	Description	Qt

DATE 5/18/1988

Pos	Code No	Description	Qt
C000	J707438P8	CAP CER CL2 3N3 10%	1
C001	J707809P5	CAP CER NPO 2P2.25P G1/G2/G3	1
C100	J707809P10	CAP CER NPO 5P6 .25P	1
C101	J707438P4	CAP CER CL2 680P 10%	1
C102	J707809P8	CAP CER NPO 3P9 .25P	1
C103	J707809P27	CAP CER NPO 150P 5%	1
C104	J707809P19	CAP CER NPO 33P 5%	1
C105	J707809P13	CAP CER NPO 10P 5%	1
C106	J707438P14	CAP CER CL2 10N 10%	1
C107	J707809P25	CAP CER NPO 100P 5%	1
C108	J707809P22	CAP CER NPO 56P 5%	1
C109	J707809P17	CAP CER NPO 22P 5%	1
C110	J707438P14	CAP CER CL2 10N 10%	1
C111	J707809P25	CAP CER NPO 100P 5%	1
C112	J707438P4	CAP CER CL2 680P 10%	1
C113	J707809P21	CAP CER NPO 47P 5%	1
C114	J707809P25	CAP CER NPO 100P 5%	1
C115	J707809P24	CAP CER NPO 82P 5%	1
C116	J707438P14	CAP CER CL2 10N 10%	1
C117	J707809P26	CAP CER NPO 120P 5%	1
C118	J707438P14	CAP CER CL2 10N 10%	1
C119	J707438P4	CAP CER CL2 680P 10%	1
C120	J707809P23	CAP CER NPO 68P 5%	1
C121	J707809P23	CAP CER NPO 68P 5%	1
C122	A700006P34	CAP MICA 100P 5% G1/G2/G3	1
C122	A700006P38	CAP MICA 150P 5% G4/G5/G6	1
C123	J707438P14	CAP CER CL2 10N 10%	1
C124	J707809P26	CAP CER NPO 120P 5%	1
C125	J707438P4	CAP CER CL2 680P 10%	1
C126	J707438P14	CAP CER CL2 10N 10%	1
C127	J707353P6	CAP ELECT 4U7 25V	1
C128	J707809P27	CAP CER NPO 150P 5%	1
C129	J707809P27	CAP CER NPO 150P 5%	1
C130	A700006P32	CAP MICA 82P 5% G1/G2/G3	1
C130	A700006P30	CAP MICA 68P 5% G4/G5/G6	1
C131	A700006P41	CAP MICA 180P 5% G1/G2/G3	1
C131	A700006P38	CAP MICA 150P 5% G4/G5/G6	1

Pos	Code No	Description	Qt
C132	A700006P41	CAP MICA 180P 5% G1/G2/G3	1
C133	J707438P26	CAP CER CL2 100N 10% G1/G2/G3	1
C134	J707809P26	CAP CER NPO 120P 5% G1/G2/G4	1
C135	J707438P4	CAP CER CL2 680P 10%	1
C136	A700006P26	CAP MICA 47P 5% G1/G2/G3	1
C137	A700006P34	CAP MICA 100P 5% G1/G2/G3	1
C138	J707809P27	CAP CER NPO 150P 5%	1
C139	J707809P27	CAP CER NPO 150P 5%	1
C140	J707809P27	CAP CER NPO 150P 5%	1
C141	J707809P27	CAP CER NPO 150P 5%	1
C142	A700006P6	CAP MICA 10P 5%	1
C143	A700006P22	CAP MICA 36P 5%	1
C144	A700006P22	CAP MICA 36P 5%	1
C145	A700006P11	CAP MICA 15P 5%	1
C146	J707438P4	CAP CER CL2 680P 10%	1
C147	J707438P4	CAP CER CL2 680P 10%	1
C148	J707438P4	CAP CER CL2 680P 10%	1
C149	J707438P4	CAP CER CL2 680P 10%	1
C150	J707809P1	CAP CER NPO 1P0 .25P	1
C151	J707809P1	CAP CER NPO 1P0 .25P	1
C152	J707438P4	CAP CER CL2 680P 10%	1
C153	J707438P4	CAP CER CL2 680P 10%	1
C154	J707438P4	CAP CER CL2 680P 10%	1
C155	J707438P4	CAP CER CL2 680P 10%	1
C156	J707353P3	CAP ELECT 0U47 50V	1
C157	J707438P4	CAP CER CL2 680P 10%	1
C158	J707438P4	CAP CER CL2 680P 10%	1
C159	J707438P14	CAP CER CL2 10N 10%	1
C160	J707438P4	CAP CER CL2 680P 10%	1
C161	J707438P14	CAP CER CL2 10N 10%	1
C162	J707438P14	CAP CER CL2 10N 10%	1
C163	J707438P26	CAP CER CL2 100N 10%	1
C164	J707438P4	CAP CER CL2 680P 10%	1
C165	J707438P4	CAP CER CL2 680P 10%	1
C166	J707438P4	CAP CER CL2 680P 10%	1
C167	A701413P34	CAP MICA 100P 5%	1
C168	A700006P28	CAP MICA 56P 5% G1/G2/G3	1

DATE: 5/18/1988

Pos	Code No	Description		Qt
C168	A700006P32	CAP MICA 82P 5%	G4/G5/G6	1
C169	A700006P9	CAP MICA 13P 5%	G1/G2/G3	1
C169	A700006P22	CAP MICA 36P 5%	G4/G5/G6	1
C170	J707809P8	CAP CER NPO 3P9.25P	G1/G2/G3	1
C170	J707809P13	CAP CER NPO 10P.25P	G4	1
C170	A700006P22	CAP MICA 36P 5%	G5/G6	1
C201	J707438P26	CAP CER CL2 100N 10%		1
C202	J707444P8	CAP TA SOL 22U 16V		1
C203	J707444P6	CAP TA SOL 4U7 35V		1
C204	J707436P77	CAP CER NPO 470P 5%		1
C205	J707412P9	CAP PYES 100N 10%		1
C301	J707436P3	CAP CER NPO 1P5 .25P		1
C302	J707438P5	CAP CER CL2 1N 10%		1
C304	J707436P8	CAP CER NPO 3P9 .25P		1
C305	J707436P21	CAP CER NPO 15P 5%		1
C306	J707483P1	CAP PHEN OP47 5%		1
C307	J707438P5	CAP CER CL2 1N 10%	G1/G2/G3	1
C307	J707438P4	CAP CER CL2 680P 10%	G4/G5/G6	1
C309	J707436P21	CAP CER NPO 15P 5%		1
C310	J707438P5	CAP CER CL2 1N 10%		1
C311	J707438P5	CAP CER CL2 1N 10%		1
C312	J707436P87	CAP CER NPO 1N2 5%		1
C314	J707436P5	CAP CER NPO 2P2 .25P		1
C315	J707438P5	CAP CER CL2 1N 10%		1
C316	J707436P5	CAP CER NPO 2P2 .25P		1
C317	J707444P2	CAP TA SOL 0U22 35V		1
C318	J707438P5	CAP CER CL2 1N 10%		1
C319	J707436P21	CAP CER NPO 15P 5%		1
C320	J707438P5	CAP CER CL2 1N 10%		1
C322	J707483P7	CAP PHEN 1P00 5%		1
C323	J707483P5	CAP PHEN OP68 5%		1
C324	J707483P4	CAP PHEN OP56 5%		1
C325	J707438P5	CAP CER CL2 1N 10%		1
C326	J707436P21	CAP CER NPO 15P 5%		1
C328	J707436P21	CAP CER NPO 15P 5%		1
C331	J707436P21	CAP CER NPO 15P 5%		1
C332	J707436P21	CAP CER NPO 15P 5%		1

Pos	Code No	Description	Qt
C333	J707483P13	CAP PHEN OP22 10%	1
C335	J707438P5	CAP CER CL2 1N 10%	1
C338	J707436P11	CAP CER NPO 6P8 .25P	1
C339	J707438P5	CAP CER CL2 1N 10%	1
C340	J707438P8	CAP CER CL2 3N3 10%	1
C345	J707436P37	CAP CER NPO 33P 5%	1
C347	J707438P5	CAP CER CL2 1N 10%	1
C348	J707438P5	CAP CER CL2 1N 10%	1
C350	J707436P3	CAP CER NPO 1P5 .25P	1
C351	J707436P13	CAP CER NPO 10P 5%	1
C353	J707483P2	CAP PHEN OP33 5%	1
C354	J707436P13	CAP CER NPO 10P 5%	1
C355	J707483P8	CAP PHEN 1P20 5%	1
C356	J707438P5	CAP CER CL2 1N 10%	1
C357	J707436P1	CAP CER NPO 1P0 .25P	1
C358	J707436P1	CAP CER NPO 1P0 .25P	1
C359	J707436P1	CAP CER NPO 1P0 .25P	1
C401	J707438P8	CAP CER CL2 3N3 10%	1
C402	J707438P8	CAP CER CL2 3N3 10%	1
C403	J707438P8	CAP CER CL2 3N3 10%	1
C404	J707436P9	CAP CER NPO 4P7 .25P	1
C405	J707438P26	CAP CER CL2 100N 10%	1
C406	J707436P10	CAP CER NPO 5P6 .25P	1
C407	J707436P9	CAP CER NPO 4P7 .25P	1
C408	J707438P5	CAP CER CL2 1N 10%	1
C409	J707438P8	CAP CER CL2 3N3 10%	1
C410	J707444P8	CAP TA SOL 22U 16V	1
C411	J707438P26	CAP CER CL2 100N 10%	1
C412	J707438P26	CAP CER CL2 100N 10%	1
C413	J707436P21	CAP CER NPO 15P 5%	1
C414	J707438P8	CAP CER CL2 3N3 10%	1
C415	J707438P8	CAP CER CL2 3N3 10%	1
C416	J708702P16	CAP CER N750 18P 5%	1
C417	J707436P49	CAP CER NPO 56P 5%	1
C418	J707438P14	CAP CER CL2 10N 10%	1
C419	J707438P26	CAP CER CL2 100N 10%	1
C420	J707438P14	CAP CER CL2 10N 10%	1

Pos	Code No	Description	Qt
C421	J707438P26	CAP CER CL2 100N 10%	1
C422	J707438P26	CAP CER CL2 100N 10%	1
C423	J707436P13	CAP CER NPO 10P 5%	1
C424	J707438P8	CAP CER CL2 3N3 10%	1
C425	J707412P13	CAP PYES 470N 10%	1
C426	J707436P93	CAP CER NPO 2N2 5%	1
C427	J707436P73	CAP CER NPO 330P 5%	1
C428	J707436P73	CAP CER NPO 330P 5%	1
C429	J707438P14	CAP CER CL2 10N 10%	1
C430	J707444P8	CAP TA SOL 22U 16V	1
C431	J707444P8	CAP TA SOL 22U 16V	1
C432	J707438P26	CAP CER CL2 100N 10%	1
C433	J707438P26	CAP CER CL2 100N 10%	1
C434	J707438P8	CAP CER CL2 3N3 10%	1
C435	J707436P1	CAP CER NPO 1P0 .25P	1
C436	J707438P26	CAP CER CL2 100N 10%	1
C501	J707412P11	CAP PYES 220N 10%	1
C502	J707412P11	CAP PYES 220N 10%	1
C503	J707412P11	CAP PYES 220N 10%	1
C504	A700235P7	CAP CER N150 3P3 .25P	1
C505	A700235P4	CAP CER N150 1P8 .25P	1
C506	A700235P12	CAP CER N150 8P2 .25P	1
C507	A700235P14	CAP CER N150 12P 5%	1
C508	A700235P32	CAP CER N150 11P 5%	1
C509	A700235P10	CAP CER N150 5P6 .25P	1
C510	A700235P16	CAP CER N150 18P 5%	1
C512	J707483P7	CAP PHEN 1P00 5%	1
C513	J707438P3	CAP CER CL2 470P 10%	1
C515	J707436P12	CAP CER NPO 8P2 .25P	1
C516	J707436P11	CAP CER NPO 6P8 .25P	1
C517	J707444P6	CAP TA SOL 4U7 35V	1
C518	J707436P3	CAP CER NPO 1P5 .25P	1
C519	J707438P3	CAP CER CL2 470P 10%	1
C520	J707436P5	CAP CER NPO 2P2 .25P	1
C521	J707436P17	CAP CER NPO 12P 5%	1
C522	J707438P3	CAP CER CL2 470P 10%	1
C523	J707436P5	CAP CER NPO 2P2 .25P	1

Pos	Code No	Description	Qt
C524	J707438P3	CAP CER CL2 470P 10%	1
C525	J707438P3	CAP CER CL2 470P 10%	1
C526	J707438P3	CAP CER CL2 470P 10%	1
C527	J707438P3	CAP CER CL2 470P 10%	1
C528	J707438P3	CAP CER CL2 470P 10%	1
C540	J707438P3	CAP CER CL2 470P 10%	1
C541	J707438P3	CAP CER CL2 470P 10%	1
C542	J707438P3	CAP CER CL2 470P 10%	1
C543	J707438P3	CAP CER CL2 470P 10%	1
C544	J707438P3	CAP CER CL2 470P 10%	1
C545	J707438P3	CAP CER CL2 470P 10%	1
C601	J707412P11	CAP PYES 220N 10%	1
C602	J707412P11	CAP PYES 220N 10%	1
C603	J707412P11	CAP PYES 220N 10%	1
C604	A700235P5	CAP CER N150 2P2 .25P	1
C605	A700235P5	CAP CER N150 2P2 .25P	1
C606	A700235P8	CAP CER N150 3P9 .25P	1
C607	A700235P10	CAP CER N150 5P6 .25P	1
C608	A700235P11	CAP CER N150 6P8 .25P	1
C609	A700235P36	CAP CER N150 7P5 .25P	1
C610	A700235P12	CAP CER N150 8P2 .25P	1
C611	J707436P7	CAP CER NPO 3P3 .25P	1
C612	J707436P9	CAP CER NPO 4P7 .25P	1
C613	J707444P6	CAP TA SOL 4U7 35V	1
C614	J707436P1	CAP CER NPO 1P0 .25P	1
C615	J707436P77	CAP CER NPO 470P 5%	1
C616	J707438P3	CAP CER CL2 470P 10%	1
C617	J707436P1	CAP CER NPO 1P0 .25P	1
C618	J707436P10	CAP CER NPO 5P6 .25P	1
C619	J707438P3	CAP CER CL2 470P 10%	1
C620	J707436P5	CAP CER NPO 2P2 .25P	1
C621	J707438P3	CAP CER CL2 470P 10%	1
C624	J707436P69	CAP CER NPO 220P 5%	1
C625	J707438P26	CAP CER CL2 100N 10%	1
C626	J707438P5	CAP CER CL2 1N 10%	1
C627	J707438P14	CAP CER CL2 10N 10%	1
C628	J707436P93	CAP CER NPO 2N2 5%	1

DATE: 5/18/1988

Pos	Code No	Description	Qt
C629	J707436P65	CAP CER NPO 150P 5%	1
C630	J707436P69	CAP CER NPO 220P 5%	1
C631	J707436P69	CAP CER NPO 220P 5%	1
C632	J707438P26	CAP CER CL2 100N 10%	1
C633	J707444P17	CAP TA SOL 47U 10V	1
C634	J707438P26	CAP CER CL2 100N 10%	1
C635	J707438P3	CAP CER CL2 470P 10%	1
C636	J707444P17	CAP TA SOL 47U 10V	1
C637	J707438P26	CAP CER CL2 100N 10%	1
C639	J707438P8	CAP CER CL2 3N3 10%	1
C640	J707412P9	CAP PYES 100N 10%	1
C641	J707412P13	CAP PYES 470N 10%	1
C642	J707412P13	CAP PYES 470N 10%	1
C643	J707438P22	CAP CER CL2 47N 10%	1
C644	J707436P6	CAP CER NPO 2P7 .25P	1
C652	J707438P5	CAP CER CL2 1N 10%	1
C653	J707444P6	CAP TA SOL 4U7 35V	1
C656	J707436P77	CAP CER NPO 470P 5%	1
C657	J707438P3	CAP CER CL2 470P 10%	1
C659	J707438P5	CAP CER CL2 1N 10%	1
C660	J707438P12	CAP CER CL2 6N8 5%	1
C665	J707438P3	CAP CER CL2 470P 10%	1
C666	J707438P3	CAP CER CL2 470P 10%	1
C667	J707438P3	CAP CER CL2 470P 10%	1
C668	J707436P61	CAP CER NPO 100P 5%	1
C701	J707436P29	CAP CER NPO 22P 5%	1
C702	J708702P22	CAP CER N750 56P 5%	1
C703	J707436P69	CAP CER NPO 220P 5%	1
C704	J707436P13	CAP CER NPO 10P 5%	1
C705	J707438P5	CAP CER CL2 1N 10%	1
C706	J707438P14	CAP CER CL2 10N 10%	1
C707	J707436P10	CAP CER NPO 5P6 .25P	1
C708	J707438P14	CAP CER CL2 10N 10%	1
C709	J707438P14	CAP CER CL2 10N 10%	1
D100	A700047P3	DIO SI SIG 1N6263	1
D101	J706892P1	DIO SI PIN UM 9401	1
D102	J706892P1	DIO SI PIN UM 9401	1

Pos	Code No	Description	Qt
D103	J707390P1	DIO SI SIG BAV 74	1
D300	J707928P2	DIO SI CAP BB 809	1
D301	J707928P2	DIO SI CAP BB 809	1
D302	J707928P2	DIO SI CAP BB 809	1
D303	J707928P2	DIO SI CAP BB 809	1
D304	J707928P2	DIO SI CAP BB 809	1
D305	J707928P2	DIO SI CAP BB 809	1
D306	J707928P2	DIO SI CAP BB 809	1
D307	J707928P2	DIO SI CAP BB 809	1
D401	A700025P8	DIO SI ZENR 6V8 5% 0.4W	1
D501	J706007P1	DIO SI CAP BB505B	1
D502	J706007P1	DIO SI CAP BB505B	1
D503	J706007P1	DIO SI CAP BB505B	1
D504	J707928P2	DIO SI CAP BB 809	1
D505	J707769P1	DIO SI CAP BBY 31	1
D601	J706007P1	DIO SI CAP BB505B	1
D602	J706007P1	DIO SI CAP BB505B	1
D603	J706007P1	DIO SI CAP BB505B	1
D604	J706007P1	DIO SI CAP BB505B	1
D605	J707389P1	DIO SI SIG BAV 99	1
D606	J708681P1	DIO SI SIG BAW 56	1
D607	J707390P1	DIO SI SIG BAV 74	1
D608	J707390P1	DIO SI SIG BAV 74	1
D610	J708681P1	DIO SI SIG BAW 56	1
D701	J707928P2	DIO SI CAP BB 809	1
D702	J707390P1	DIO SI SIG BAV 74	1
L100	A700024P1	COIL RF FIX 0.1UH 10%	1
L101	A700024P1	COIL RF FIX 0.1UH 10%	1
L102	K805653G5	COIL ASM 5 1/2T	1
L103	J707339G1	COIL FIX ASM	1
L104	A700024P1	COIL RF FIX 0.1UH 10%	1
L105	K805653G1	COIL ASM 1 1/2T	1
L106	J707256P2	COIL FIX	1
L107	J707339G1	COIL FIX ASM	1
L108	K805653G2	COIL ASM 2 1/2T G1/G2/G3	1
L108	K805653G6	COIL ASM 6 1/2T G4/G5/G6	1
L109	J707339G1	COIL FIX ASM	1

Pos	Code No	Description		Qt
L110	J707256P1	COIL FIX	G1/G2/G3	1
L110	J707256P2	COIL FIX	G4/G5/G6	1
L112	J707339G1	COIL FIX ASM		1
L113	A700024P13	COIL RF FIX 1.0UH 10%		1
L114	K805653G2	COIL ASM 2 1/2T	G1/G2/G4	1
L114	K805653G4	COIL ASM 4 1/2T	G4/G5/G6	1
L115	J709287P1	CORE TOR FERR		1
L116	J709287P1	CORE TORFERR	G1/G2/G3	1
L117	K805653G4	COIL ASM 4 1/2T	G1/G2/G3	1
L118	J707339G1	COIL FIX ASM	G1/G2/G3	1
L119	K805653G4	COIL ASM 4 1/2T	G1/G2/G3	1
L120	J707256P2	COIL FIX	G1/G2/G3	1
L120	J707256P1	COIL FIX	G4/G5/G6	1
L121	A700024P13	COIL RF FIX 1.0UH 10%		1
L122	A700024P25	COIL RF FIX 10UH 10%		1
L123	A700024P25	COIL RF FIX 10UH 10%		1
L124	K805653G5	COIL ASM 5 1/2T		1
L125	K805653G6	COIL ASM 6 1/2T		1
L126	K805653G5	COIL ASM 5 1/2T		1
L127	A700024P25	COIL RF FIX 10UH 10%		1
L128	A700024P25	COIL RF FIX 10UH 10%		1
L129	A700024P13	COIL RF FIX 1.0UH 10%		1
L130	K805653G2	COIL ASM 2 1/2T	G1/G2/G3	1
L130	K805653G1	COIL ASM 1 1/2T	G4/G5/G6	1
L131	K805653G3	COIL ASM 3 1/2T	G1/G2/G3	1
L131	K805653G2	COIL ASM 2 1/2T	G4/G5/G6	1
L301	J709099P13	COIL RF VAR 4-1/2T TAP		1
L302	J709099P13	COIL RF VAR 4-1/2T TAP		1
L303	J707486P6	COIL RF FIX 0.47UH 10%		1
L304	J709099P2	COIL RF VAR 4-1/2T TAP		1
L305	J707486P2	COIL RF FIX 3.3UH 10%		1
L306	J709099P7	COIL RF VAR 4-1/2T TAP		1
L308	J709099P6	COIL RF VAR 4-1/2T TAP		1
L310	J709099P2	COIL RF VAR 4-1/2T TAP		1
L312	J708428P2	COIL RF VAR 45 MHZ		1
L313	J709099P4	COIL RF VAR 3-1/2T TAP		1
L314	J709099P3	COIL RF VAR 3-1/2T TAP		1

Pos	Code No	Description		Qt
L401	J707486P10	COIL RF FIX 1.5UH 10%		1
L403	K805570G2	COIL ASM		1
L404	K805570G1	COIL ASM		1
L405	J708428P1	COIL RF VAR 45 MHZ		1
L406	K805570G3	COIL ASM		1
L407	A700024P25	COIL RF FIX 10UH 10%		1
L408	J708428P2	COIL RF VAR 45 MHZ		1
L409	J707431P1	COIL RF VAR 455KHZ 25%		1
L410	J707431P1	COIL RF VAR 455KHZ 25%		1
L501	A700024P13	COIL RF FIX 1.0UH 10%		1
L502	A700024P13	COIL RF FIX 1.0UH 10%		1
L503	A700024P13	COIL RF FIX 1.0UH 10%		1
L504	A700024P13	COIL RF FIX 1.0UH 10%		1
L505	L855671P1	COIL RADIO FREQUENCY		1
L506	A700024P13	COIL RF FIX 1.0UH 0%		1
L507	A700024P13	COIL RF FIX 1.0UH 0%		1
L508	A700024P4	COIL RF FIX 0.18UH 10%		1
L601	A700024P13	COIL RF FIX 1.0UH 10%		1
L602	A700024P13	COIL RF FIX 1.0UH 10%		1
L603	A700024P13	COIL RF FIX 1.0UH 10%		1
L604	A700024P13	COIL RF FIX 1.0UH 10%		1
L605	L855671P1	COIL RADIO FREQUENCY		1
L606	A700024P13	COIL RF FIX 1.0UH 10%		1
L607	A700024P13	COIL RF FIX 1.0UH 10%		1
L608	A700024P2	COIL RF FIX 0.12UH 10%		1
L609	K805653G10	COIL RF FIXED 10 1/2T		1
L701	K805570G4	COIL ASM		1
L702	A700024P43	COIL RF FIX 330UH 10%		1
L703	A700024P27	COIL RF FIX 15UH 10%		1
P102	J707064P112	CONN PWB FEM 12-CKT		1
P105	A701883P4	CONN PWB FEM RECP		1
Q100	J707388P1	TSTR NPN SI BFR 53		1
Q101	J707388P1	TSTR NPN SI BFR 53		1
Q102	A701940P1	TSTR NPN SI RF-PWR 0.4W		1
Q103	A700063P1	TSTR NPN SI RF-PWR 2.0W		1
Q104	J709163P1	TSTR NPN SI RF-PWR 10W		1
Q105	J708133P1	TSTR NPN SI RF-PWR 28W	G1/G2/G3	1

DATE: 5/18/1988

Pos	Code No	Description	Qt
Q106	J707432P1	TSTR PNP SI BCX 18	1
Q107	J707386P1	TSTR NPN SI BCW 32	1
Q108	J708406P1	TSTR NPN SI BD 233	1
Q109	J707386P1	TSTR NPN SI BCW 32	1
Q201	J707435P1	TSTR PNP SI BC 369	1
Q202	J707386P1	TSTR NPN SI BCW 32	1
Q203	J707432P1	TSTR PNP SI BCX 18	1
Q204	J707386P1	TSTR NPN SI BCW 32	1
Q301	J706011P2	TSTR NPN SI BFR 91A	1
Q302	J708315P1	TSTR JFET SI 2N5245	1
Q401	J707817P1	TSTR JFET SI J 309	1
Q402	J707817P1	TSTR JFET SI J 309	1
Q403	J707419P1	TSTR JFET SI BF511	1
Q404	J708418P1	TSTR NPN SI BFS 20	1
Q405	J708418P1	TSTR NPN SI BFS 20	1
Q406	J708418P1	TSTR NPN SI BFS 20	1
Q407	J707386P1	TSTR NPN SI BCW 32	1
Q408	J707387P1	TSTR PNP SI BCW 30	1
Q501	J707817P1	TSTR JFET SI J 309	1
Q502	J707388P1	TSTR NPN SI BFR 53	1
Q601	J707817P1	TSTR JFET SI J 309	1
Q602	J707388P1	TSTR NPN SI BFR 53	1
Q603	J708318P1	TSTR PNP SI BFT 92	1
Q604	J707433P1	TSTR MFET SI BF 989	1
Q605	J707386P1	TSTR NPN SI BCW 32	1
Q612	J707386P1	TSTR NPN SI BCW 32	1
Q613	J707386P1	TSTR NPN SI BCW 32	1
Q701	J707419P1	TSTR JFET SI BF511	1
Q702	J707387P1	TSTR PNP SI BCW 30	1
R000	J707385P332	RES MFLM 1/8W 3K3 5%	1
R100	J707385P122	RES MFLM 1/8W 1K2 5%	1
R101	J707385P472	RES MFLM 1/8W 4K7 5%	1
R102	J707385P270	RES MFLM 1/8W 27R 5%	1
R103	J707385P470	RES MFLM 1/8W 47R 5%	1
R104	J707385P102	RES MFLM 1/8W 1K0 5%	1
R105	J707385P182	RES MFLM 1/8W 1K8 5%	1
R106	J707385P470	RES MFLM 1/8W 47R 5%	1

Pos	Code No	Description	Qt
R107	J707385P680	RES MFLM 1/8W 68R 5%	1
R108	J707385P820	RES MFLM 1/8W 82R 5%	1
R109	J707385P100	RES MFLM 1/8W 10R 5%	1
R110	J707385P100	RES MFLM 1/8W 10R 5%	1
R111	J707385P100	RES MFLM 1/8W 10R 5%	1
R112	J707385P947	RES MFLM 1/8W 4R7 20%	1
R113	J707385P100	RES MFILM 1/8W 10R 5%	1
R114	J707385P947	RES MFLM 1/8W 4R7 20%	1
R115	J707385P100	RES MFLM 1/8W 10R 5% G1/G2/G3	1
R116	J707385P220	RES MFLM 1/8W 22R 5% G1/G2/G3	1
R117	J707385P220	RES MFLM 1/8W 22R 5% G1/G2/G3	1
R118	J707385P473	RES MFLM 1/8W 47K 5%	1
R119	J707385P820	RES MFLM 1/8W 82R 5%	1
R120	J707385P820	RES MFLM 1/8W 82R 5%	1
R121	J707385P333	RES MFLM 1/8W 33K 5%	1
R122	J707385P221	RES MFLM 1/8W 220R 5%	1
R123	J707385P221	RES MFLM 1/8W 220R 5%	1
R132	J708538P9	RES VAR CERM 200K 20%	1
R133	J708538P4	RES VAR CERM 5K0 20%	1
R134	J707385P100	RES MFLM 1/8W 10R 5%	1
R135	J706147P2	RES THERM PTC 80R 25%	1
R136	J707385P682	RES MFLM 1/8W 6K8 5%	1
R137	J707385P223	RES MFLM 1/8W 22K 5%	1
R138	J707385P472	RES MFLM 1/8W 4K7 5%	1
R139	J707385P472	RES MFLM 1/8W 4K7 5%	1
R140	J707385P333	RES MFLM 1/8W 33K 5%	1
R141	J707385P333	RES MFLM 1/8W 33K 5%	1
R142	J707385P104	RES MFLM 1/8W 100K 5%	1
R143	J707385P222	RES MFLM 1/8W 2K2 5%	1
R144	J707385P222	RES MFLM 1/8W 2K2 5%	1
R145	J707385P682	RES MFLM 1/8W 6K8 5%	1
R146	J707385P273	RES MFLM 1/8W 27K 5%	1
R147	J707385P104	RES MFLM 1/8W 100K 5%	1
R148	J707385P123	RES MFLM 1/8W 12K 5%	1
R149	J707385P472	RES MFLM 1/8W 4K7 5%	1
R150	J707385P391	RES MFLM 1/8W 390R 5%	1
R151	J707385P683	RES MFLM 1/8W 68K 5%	1

Pos	Code No	Description	Qt
R152	J707385P104	RES MFLM 1/8W 100K 5%	1
R153	J707385P221	RES MFLM 1/8W 220R 5%	1
R154	J707385P274	RES MFLM 1/8W 270K 5%	1
R155	J707385P222	RES MFLM 1/8W 2K2 5%	1
R156	J707385P102	RES MFLM 1/8W 1K0 5%	1
R157	J707385P392	RES MFLM 1/8W 3K9 5%	1
R201	J707385P561	RES MFLM 1/8W 560R 5%	1
R202	J707385P271	RES MFLM 1/8W 270R 5%	1
R203	J707385P153	RES MFLM 1/8W 15K 5%	1
R204	J707385P153	RES MFLM 1/8W 15K 5%	1
R205	J707385P472	RES MFLM 1/8W 4K7 5%	1
R206	J707385P272	RES MFLM 1/8W 2K7 5%	1
R207	J707385P563	RES MFLM 1/8W 56K 5%	1
R208	J707385P563	RES MFLM 1/8W 56K 5%	1
R209	J707385P271	RES MFLM 1/8W 270R 5%	1
R301	J707385P471	RES MFLM 1/8W 470R 5%	1
R302	J707385P391	RES MFLM 1/8W 390R 5%	1
R303	J707385P104	RES MFLM 1/8W 100K 5%	1
R304	J707385P104	RES MFLM 1/8W 100K 5%	1
R305	J707385P900	RES MFLM 1/8W 0R JUMPER	1
R306	J707385P222	RES MFLM 1/8W 2K2 5%	1
R307	J707385P681	RES MFLM 1/8W 680R 5%	1
R308	J707385P470	RES MFLM 1/8W 47R 5%	1
R309	J707385P270	RES MFLM 1/8W 27R 5%	1
R310	J707385P104	RES MFLM 1/8W 100K 5%	1
R311	J707385P560	RES MFLM 1/8W 56R 5%	1
R312	J707385P104	RES MFLM 1/8W 100K 5%	1
R314	J707385P104	RES MFLM 1/8W 100K 5%	1
R316	J707385P104	RES MFLM 1/8W 100K 5%	1
R317	J707385P182	RES MFLM 1/8W 1K8 5%	1
R318	J707385P100	RES MFLM 1/8W 10R 5%	1
R319	J707385P101	RES MFLM 1/8W 100R 5%	1
R321	J707385P270	RES MFLM 1/8W 27R 5%	1
R322	J707385P391	RES MFLM 1/8W 390R 5%	1
R323	J707385P104	RES MFLM 1/8W 100K 5%	1
R324	J707385P104	RES MFLM 1/8W 100K 5%	1
R325	J707385P100	RES MFLM 1/8W 10R 5%	1

Pos	Code No	Description	Qt
R326	J707385P392	RES MFLM 1/8W 3K9 5%	1
R327	J707385P102	RES MFLM 1/8W 1K0 5%	1
R401	J707385P560	RES MFLM 1/8W 56R 5%	1
R402	J707385P100	RES MFLM 1/8W 10R 5%	1
R403	J707385P332	RES MFLM 1/8W 3K3 5%	1
R405	J707385P100	RES MFLM 1/8W 10R 5%	1
R406	J707385P820	RES MFLM 1/8W 82R 5%	1
R407	J707385P470	RES MFLM 1/8W 47R 5%	1
R408	J707385P470	RES MFLM 1/8W 47R 5%	1
R410	J707385P272	RES MFLM 1/8W 2K7 5%	1
R411	J707385P682	RES MFLM 1/8W 6K8 5%	1
R412	J707385P272	RES MFLM 1/8W 2K7 5%	1
R413	J707385P821	RES MFLM 1/8W 820R 5%	1
R414	J707385P220	RES MFLM 1/8W 22R 5%	1
R415	J707385P222	RES MFLM 1/8W 2K2 5%	1
R416	J707385P562	RES MFLM 1/8W 5K6 5%	1
R417	J707385P103	RES MFLM 1/8W 10K 5%	1
R418	J707385P153	RES MFLM 1/8W 15K 5%	1
R419	J707385P182	RES MFLM 1/8W 1K8 5%	1
R420	J707385P182	RES MFLM 1/8W 1K8 5%	1
R421	J707385P182	RES MFLM 1/8W 1K8 5%	1
R422	J707385P473	RES MFLM 1/8W 47K 5%	1
R423	J707385P153	RES MFLM 1/8W 15K 5%	1
R424	J708538P5	RES VAR CERM 10K 20%	1
R425	J707385P272	RES MFLM 1/8W 2K7 5%	1
R426	J707385P563	RES MFLM 1/8W 56K 5%	1
R427	J707385P273	RES MFLM 1/8W 27K 5%	1
R428	J707385P683	RES MFLM 1/8W 68K 5%	1
R429	J707385P104	RES MFLM 1/8W 100K 5%	1
R430	J707385P334	RES MFLM 1/8W 330K 5%	1
R431	J707385P473	RES MFLM 1/8W 47K 5%	1
R432	J707385P473	RES MFLM 1/8W 47K 5%	1
R433	J707385P271	RES MFLM 1/8W 270R 5%	1
R434	J707385P102	RES MFLM 1/8W 1K0 5%	1
R435	J706147P3	RES THERM PTC 250R 25%	1
R436	J707385P392	RES MFLM 1/8W 3K9 5%	1
R437	J707406P7	RES THERM NTC 220R 10%	1

DATE: 5/18/1988

Pos	Code No	Description	Qt
R438	J707385P222	RES MFLM 1/8W 2K2 5%	1
R439	J707385P392	RES MFLM 1/8W 3K9 5%	1
R440	J707385P392	RES MFLM 1/8W 3K9 5%	1
R441	J707385P101	RES MFLM 1/8W 100R 5%	1
R442	J708538P6	RES VAR CERM 20K 20%	1
R444	J707385P473	RES MFLM 1/8W 47K 5%	1
R445	J707385P273	RES MFLM 1/8W 27K 5%	1
R446	J707385P224	RES MFLM 1/8W 220K 5%	1
R447	J707385P392	RES MFLM 1/8W 3K9 5%	1
R448	J707385P101	RES MFLM 1/8W 100R 5%	1
R449	J707385P470	RES MFLM 1/8W 47R 5%	1
R450	J707385P103	RES MFLM 1/8W 10K 5%	1
R451	J707385P332	RES MFLM 1/8W 3K3 5%	1
R501	J707385P122	RES MFLM 1/8W 1K2 5%	1
R502	J707385P122	RES MFLM 1/8W 1K2 5%	1
R503	J707385P122	RES MFLM 1/8W 1K2 5%	1
R504	J707385P104	RES MFLM 1/8W 100K 5%	1
R505	J707385P104	RES MFLM 1/8W 100K 5%	1
R506	J707385P104	RES MFLM 1/8W 100K 5%	1
R508	J707385P103	RES MFLM 1/8W 10K 5%	1
R509	J707385P910	RES MFLM 1/8W 1R0 20%	1
R510	J707385P332	RES MFLM 1/8W 3K3 5%	1
R512	J707385P561	RES MFLM 1/8W 560R 5%	1
R513	J707385P183	RES MFLM 1/8W 18K 5%	1
R514	J707385P472	RES MFLM 1/8W 4K7 5%	1
R515	J707385P470	RES MFLM 1/8W 47R 5%	1
R517	J707385P101	RES MFLM 1/8W 100R 5%	1
R518	J707385P470	RES MFLM 1/8W 47R 5%	1
R519	J707385P221	RES MFLM 1/8W 220R 5%	1
R529	J707385P392	RES MFLM 1/8W 3K9 5%	1
R601	J707385P122	RES MFLM 1/8W 1K2 5%	1
R602	J707385P122	RES MFLM 1/8W 1K2 5%	1
R603	J707385P122	RES MFLM 1/8W 1K2 5%	1
R604	J707385P104	RES MFLM 1/8W 100K 5%	1
R605	J707385P104	RES MFLM 1/8W 100K 5%	1
R606	J707385P104	RES MFLM 1/8W 100K 5%	1
R607	J707385P561	RES MFLM 1/8W 560R 5%	1

Pos	Code No	Description	Qt
R608	J707385P221	RES MFLM 1/8W 220R 5%	1
R609	J707385P472	RES MFLM 1/8W 4K7 5%	1
R610	J707385P183	RES MFLM 1/8W 18K 5%	1
R611	J707385P271	RES MFLM 1/8W 270R 5%	1
R612	J707385P222	RES MFLM 1/8W 2K2 5%	1
R613	J707385P101	RES MFLM 1/8W 100R 5%	1
R614	J707385P561	RES MFLM 1/8W 560R 5%	1
R615	J707385P272	RES MFLM 1/8W 2K7 5%	1
R616	J707385P470	RES MFLM 1/8W 47R 5%	1
R617	J707385P683	RES MFLM 1/8W 68K 5%	1
R618	J707385P683	RES MFLM 1/8W 68K 5%	1
R619	J707385P104	RES MFLM 1/8W 100K 5%	1
R620	J707385P271	RES MFLM 1/8W 270R 5%	1
R621	J707385P561	RES MFLM 1/8W 560R 5%	1
R622	J707385P102	RES MFLM 1/8W 1K0 5%	1
R623	J707385P224	RES MFLM 1/8W 220K 5%	1
R624	J707385P223	RES MFLM 1/8W 22K 5%	1
R625	J707385P470	RES MFLM 1/8W 47R 5%	1
R626	J707385P100	RES MFLM 1/8W 10R 5%	1
R627	J707385P103	RES MFLM 1/8W 10K 5%	1
R628	J707385P224	RES MFLM 1/8W 220K 5%	1
R629	J707385P393	RES MFLM 1/8W 39K 5%	1
R630	J707385P100	RES MFLM 1/8W 10R 5%	1
R631	J707385P824	RES MFLM 1/8W 820K 5%	1
R632	J707385P223	RES MFLM 1/8W 22K 5%	1
R633	J707385P824	RES MFLM 1/8W 820K 5%	1
R634	J707385P123	RES MFLM 1/8W 12K 5%	1
R635	J707385P102	RES MFLM 1/8W 1K0 5%	1
R636	J707385P332	RES MFLM 1/8W 3K3 5%	1
R637	J707385P181	RES MFLM 1/8W 180R 5%	1
R638	J707385P154	RES MFLM 1/8W 150K 5%	1
R639	J707385P682	RES MFLM 1/8W 6K8 5%	1
R640	J707385P105	RES MFLM 1/8W 1M0 10%	1
R641	J707385P184	RES MFLM 1/8W 180K 5%	1
R642	J707385P184	RES MFLM 1/8W 180K 5%	1
R643	J707385P105	RES MFLM 1/8W 1M0 10%	1
R644	J707385P333	RES MFLM 1/8W 33K 5%	1

DATE: 5/18/1988

Pos	Code No	Description	Qt
R645	J707385P103	RES MFLM 1/8W 10K 5%	1
R646	J707385P682	RES MFLM 1/8W 6K8 5%	1
R647	J707385P333	RES MFLM 1/8W 33K 5%	1
R648	J707385P823	RES MFLM 1/8W 82K 5%	1
R649	J707385P393	RES MFLM 1/8W 39K 5%	1
R650	J707385P393	RES MFLM 1/8W 39K 5%	1
R651	J707385P333	RES MFLM 1/8W 33K 5%	1
R652	J707385P222	RES MFLM 1/8W 2K2 5%	1
R653	J707385P333	RES MFLM 1/8W 33K 5%	1
R654	J707385P562	RES MFLM 1/8W 5K6 5%	1
R655	J707385P183	RES MFLM 1/8W 18K 5%	1
R656	J707385P393	RES MFLM 1/8W 39K 5%	1
R657	J707385P823	RES MFLM 1/8W 82K 5%	1
R658	J707385P154	RES MFLM 1/8W 150K 5%	1
R659	J707385P103	RES MFLM 1/8W 10K 5%	1
R660	J707385P333	RES MFLM 1/8W 33K 5%	1
R661	J707385P393	RES MFLM 1/8W 39K 5%	1
R662	J707385P473	RES MFLM 1/8W 47K 5%	1
R663	J708538P6	RES VAR CERM 20K20%	1
R664	J707385P563	RES MFLM 1/8W 56K 5%	1
R665	J707385P224	RES MFLM 1/8W 220K 5%	1
R666	J707385P124	RES MFLM 1/8W 120K 5%	1
R667	J707385P124	RES MFLM 1/8W 120K 5%	1
R668	J707385P122	RES MFLM 1/8W 1K2 5%	1
R669	J707385P221	RES MFLM 1/8W 220R 5%	1
R670	J707385P103	RES MFLM 1/8W 10K 5%	1
R671	J707385P562	RES MFLM 1/8W 5K6 5%	1
R672	J707385P822	RES MFLM 1/8W 8K2 5%	1
R673	J707385P822	RES MFLM 1/8W 8K2 5%	1
R674	J707385P101	RES MFLM 1/8W 100R 5%	1
R675	J708538P5	RES VAR CERM 10K 20%	1
R676	J707385P102	RES MFLM 1/8W 1K0 5%	1
R677	J708538P5	RES VAR CERM 10K 20%	1
R678	J707385P470	RES MFLM 1/8W 47R 5%	1
R679	J707385P821	RES MFLM 1/8W 820R 5%	1
R680	J708538P6	RES VAR CERM 20K 20%	1
R681	J707385P223	RES MFLM 1/8W 22K 5%	1

Pos	Code No	Description		Qt
R682	J707385P152	RES MFLM 1/8W 1K5 5%		1
R683	J707385P223	RES MFLM 1/8W 22K 5%		1
R684	J707385P183	RES MFLM 1/8W 18K 5%		1
R685	J707385P183	RES MFLM 1/8W 18K 5%		1
R686	J707385P103	RES MFLM 1/8W 10K 5%		1
R687	J707385P103	RES MFLM 1/8W 10K 5%		1
R689	J707385P105	RES MFLM 1/8W 1MO 10%		1
R690	J707385P124	RES MFLM 1/8W 120K 5%		1
R691	J707385P273	RES MFLM 1/8W 27K 5%		1
R692	J707385P223	RES MFLM 1/8W 22K 5%		1
R693	J707385P105	RES MFLM 1/8W 1MO 10%		1
R694	J707385P223	RES MFLM 1/8W 22K 5%		1
R695	J707385P105	RES MFLM 1/8W 1MO 10%		1
R696	J707385P223	RES MFLM 1/8W 22K 5%		1
R697	J707385P105	RES MFLM 1/8W 1MO 10%		1
R698	J707385P103	RES MFLM 1/8W 10K 5%		1
R701	J708666P1	RES THERM NTC 5K 2%		1
R702	A701250P413	RES MFILM 133K 1% 1/4W		1
R703	A701250P213	RES MFILM 1K33 1% 1/4W		1
R704	A701250P325	RES MFILM 17K8 1% 1/4W		1
R705	J708666P2	RES THERM NTC 20K 2%		1
R706	J708666P2	RES THERM NTC 20K 2%		1
R707	J707385P104	RES MFLM 1/8W 100K 5%		1
R708	J707385P105	RES MFLM 1/8W 1MO 10%		1
R709	J707385P181	RES MFLM 1/8W 180R 5%		1
R710	J707385P101	RES MFLM 1/8W 100R 5%		1
R711	J707385P223	RES MFLM 1/8W 22K 5%		1
R712	J707385P154	RES MFLM 1/8W 150K 5%		1
R713	J707385P821	RES MFLM 1/8W 820R 5%		1
R714	J707385P104	RES MFLM 1/8W 100K 5%		1
U100	J708165P2	IC LIN OP-AMP 324		1
U201	J708333P1	IC LIN VR FIX 4785		1
U401	J707449P1	IC LIN IF-AMP 3357		1
U402	M905766G1	INT CKT SQ 4002	G1/G2/G4/G5	1
U402	M905766G2	INT CKT SQ 4003	G3/G6	1
U601	J707859P1	IC LIN OP-AMP 204		1
U602	J707859P1	IC LIN OP-AMP 204		1

DATE: 5/18/1988

Pos	Code No	Description		Qt
U603	J707859P1	IC LIN OP-AMP 204		1
U604	J707859P1	IC LIN OP-AMP 204		1
U606	J707243P1	IC DIG REG 4094		1
U607	J707374P3	IC PLL PRESC 12017		1
U608	B800902P1	IC PLL SYNCUSTOM DES		1
U609	J707859P1	IC LIN OP-AMP 204		1
U610	J708503P2	IC LIN CMPAR LM 339		1
U615	J708621P2	CPLR OPTO PC 827		1
U616	J708503P2	IC LIN CMPAR LM 339		1
W001	A700184P1	RES WIRE JMPR OR JUMPER		1
W003	J707256P1	COIL FIX		1
W004	J707256P1	COIL FIX		1
W005	J708717P1	STRAP		1
W006	J709241P1	STRAP		1
W007	J709241P1	STRAP		1
Y401	J708426P1	CRYSTAL UNIT 44.5450MHZ		1
Y701	J707367P19	CRYSTAL UNIT 7.4000MHZ		1
Z401	J708330P1	FLTR CRY 45.0 +/-7.5KHZ	G1/G4	1
Z401	J708330P2	FLTR CRY 45.0 +/-6KHZ	G2/G5	1
Z401	J708330P3	FLTR CRY 45.0 +/-3.75KHZ	G3/G6	1
Z402	J707446P1	FLTR CER 455K +/-10KHZ	G1/G4	1
Z402	J707446P3	FLTR CER 455K +/-7.5KHZ	G2/G5	1
Z402	J707446P4	FLTR CER 455K +/-4.5KHZ	G3/G6	1
Z403	J707446P1	FLTR CER 455K +/-10KHZ	G1/G4	1
Z403	J707446P3	FLTR CER 455K +/-7.5KHZ	G2/G5	1
Z403	J707446P4	FLTR CER 455K +/-4.5KHZ	G3/G6	1
	M905762P1RO	BD PW	G1/G2/G3	1
	M905762P2RO	BD PW	G4/G5/G6	1
		NON ELECTRONICAL PARTS		
	J708966G1	HEAT SINK MODF		1
	K805569G2	SHIELD METALLIZED		1
	J706281P6	CORE SCREW FERR U10		8
	J708561P3	COIL FIX		1
	J708561P3	COIL FIX		1
	J708561P3	COIL FIX		1

Pos	Code No	Description	Qt

DATE: 2/29/1988

Pos	Code No	Description		Qt
C000	J707438P8	CAP CER CL2 3N3 10%		1
C001	J707809P5	CAP CER NPO 2P2.25P	G1/G2/G3	1
C100	J707809P10	CAP CER NPO 5P6 .25P		1
C101	J707438P4	CAP CER CL2 680P 10%		1
C102	J707809P8	CAP CER NPO 3P9 .25P		1
C103	J707809P27	CAP CER NPO 150P 5%		1
C104	J707809P19	CAP CER NPO 33P 5%		1
C105	J707809P13	CAP CER NPO 10P 5%		1
C106	J707438P14	CAP CER CL2 10N 10%		1
C107	J707809P25	CAP CER NPO 100P 5%		1
C108	J707809P22	CAP CER NPO 56P 5%		1
C109	J707809P17	CAP CER NPO 22P 5%		1
C110	J707438P14	CAP CER CL2 10N 10%		1
C111	J707809P25	CAP CER NPO 100P 5%		1
C112	J707438P4	CAP CER CL2 680P 10%		1
C113	J707809P21	CAP CER NPO 47P 5%		1
C114	J707809P25	CAP CER NPO 100P 5%		1
C115	J707809P24	CAP CER NPO 82P 5%		1
C116	J707438P14	CAP CER CL2 10N 10%		1
C117	J707809P26	CAP CER NPO 120P 5%		1
C118	J707438P14	CAP CER CL2 10N 10%		1
C119	J707438P4	CAP CER CL2 680P 10%		1
C120	J707809P23	CAP CER NPO 68P 5%		1
C121	J707809P23	CAP CER NPO 68P 5%		1
C122	A700006P34	CAP MICA 100P 5%	G1/G2/G3	1
C122	A700006P38	CAP MICA 150P 5%	G4/G5/G6	1
C123	J707438P14	CAP CER CL2 10N 10%		1
C124	J707809P26	CAP CER NPO 120P 5%		1
C125	J707438P4	CAP CER CL2 680P 10%		1
C126	J707438P14	CAP CER CL2 10N 10%		1
C127	J707353P6	CAP ELECT 4U7 25V		1
C128	J707809P27	CAP CER NPO 150P 5%		1
C129	J707809P27	CAP CER NPO 150P 5%		1
C130	A700006P32	CAP MICA 82P 5%	G1/G2/G3	1
C130	A700006P30	CAP MICA 68P 5%	G4/G5/G6	1
C131	A700006P41	CAP MICA 180P 5%	G1/G2/G3	1
C131	A700006P38	CAP MICA 150P 5%	G4/G5/G6	1

Pos	Code No	Description		Qt
C132	A700006P41	CAP MICA 180P 5%	G1/G2/G3	1
C133	J707438P26	CAP CER CL2 100N 10%	G1/G2/G3	1
C134	J707809P26	CAP CER NPO 120P 5%	G1/G2/G4	1
C135	J707438P4	CAP CER CL2 680P 10%		1
C136	A700006P26	CAP MICA 47P 5%	G1/G2/G3	1
C137	A700006P34	CAP MICA 100P 5%	G1/G2/G3	1
C138	J707809P27	CAP CER NPO 150P 5%		1
C139	J707809P27	CAP CER NPO 150P 5%		1
C140	J707809P27	CAP CER NPO 150P 5%		1
C141	J707809P27	CAP CER NPO 150P 5%		1
C142	A700006P6	CAP MICA 10P 5%		1
C143	A700006P22	CAP MICA 36P 5%		1
C144	A700006P22	CAP MICA 36P 5%		1
C145	A700006P11	CAP MICA 15P 5%		1
C146	J707438P4	CAP CER CL2 680P 10%		1
C147	J707438P4	CAP CER CL2 680P 10%		1
C148	J707438P4	CAP CER CL2 680P 10%		1
C149	J707438P4	CAP CER CL2 680P 10%		1
C150	J707809P1	CAP CER NPO 1P0 .25P		1
C151	J707809P1	CAP CER NPO 1P0 .25P		1
C152	J707438P4	CAP CER CL2 680P 10%		1
C153	J707438P4	CAP CER CL2 680P 10%		1
C154	J707438P4	CAP CER CL2 680P 10%		1
C155	J707438P4	CAP CER CL2 680P 10%		1
C156	J707353P3	CAP ELECT 0U47 50V		1
C157	J707438P4	CAP CER CL2 680P 10%		1
C158	J707438P4	CAP CER CL2 680P 10%		1
C159	J707438P14	CAP CER CL2 10N 10%		1
C160	J707438P4	CAP CER CL2 680P 10%		1
C161	J707438P14	CAP CER CL2 10N 10%		1
C162	J707438P14	CAP CER CL2 10N 10%		1
C163	J707438P26	CAP CER CL2 100N 10%		1
C164	J707438P4	CAP CER CL2 680P 10%		1
C165	J707438P4	CAP CER CL2 680P 10%		1
C166	J707438P4	CAP CER CL2 680P 10%		1
C167	A701413P34	CAP MICA 100P 5%		1
C168	A700006P28	CAP MICA 56P 5%	G1/G2/G3	1

DATE: 2/29/1988

Pos	Code No	Description		Qt
C168	A700006P32	CAP MICA 82P 5%	G4/G5/G6	1
C169	A700006P9	CAP MICA 13P 5%	G1/G2/G3	1
C169	A700006P22	CAP MICA 36P 5%	G4/G5/G6	1
C170	J707809P8	CAP CER NPO 3P9.25P	G1/G2/G3	1
C170	J707809P13	CAP CER NPO 10P.25P	G4	1
C170	A700006P22	CAP MICA 36P 5%	G5/G6	1
C201	J707438P26	CAP CER CL2 100N 10%		1
C202	J707444P8	CAP TA SOL 22U 16V		1
C203	J707444P6	CAP TA SOL 4U7 35V		1
C204	J707436P77	CAP CER NPO 470P 5%		1
C205	J707412P9	CAP PYES 100N 10%		1
C301	J707436P3	CAP CER NPO 1P5 .25P		1
C302	J707438P5	CAP CER CL2 1N 10%		1
C304	J707436P8	CAP CER NPO 3P9 .25P		1
C305	J707436P21	CAP CER NPO 15P 5%		1
C306	J707483P1	CAP PHEN 0P47 5%		1
C307	J707438P5	CAP CER CL2 1N 10%	G1/G2/G3	1
C307	J707438P4	CAP CER CL2 680P 10%	G4/G5/G6	1
C309	J707436P21	CAP CER NPO 15P 5%		1
C310	J707438P5	CAP CER CL2 1N 10%		1
C311	J707438P5	CAP CER CL2 1N 10%		1
C312	J707436P87	CAP CER NPO 1N2 5%		1
C314	J707436P5	CAP CER NPO 2P2 .25P		1
C315	J707438P5	CAP CER CL2 1N 10%		1
C316	J707436P5	CAP CER NPO 2P2 .25P		1
C317	J707444P2	CAP TA SOL 0U22 35V		1
C318	J707438P5	CAP CER CL2 1N 10%		1
C319	J707436P21	CAP CER NPO 15P 5%		1
C320	J707438P5	CAP CER CL2 1N 10%		1
C322	J707483P7	CAP PHEN 1P00 5%		1
C323	J707483P5	CAP PHEN 0P68 5%		1
C324	J707483P4	CAP PHEN 0P56 5%		1
C325	J707438P5	CAP CER CL2 1N 10%		1
C326	J707436P21	CAP CER NPO 15P 5%		1
C328	J707436P21	CAP CER NPO 15P 5%		1
C331	J707436P21	CAP CER NPO 15P 5%		1
C332	J707436P21	CAP CER NPO 15P 5%		1

Pos	Code No	Description	Qt
C333	J707483P13	CAP PHEN 0P22 10%	1
C335	J707438P5	CAP CER CL2 1N 10%	1
C338	J707436P11	CAP CER NPO 6P8 .25P	1
C339	J707438P5	CAP CER CL2 1N 10%	1
C340	J707438P8	CAP CER CL2 3N3 10%	1
C345	J707436P37	CAP CER NPO 33P 5%	1
C347	J707438P5	CAP CER CL2 1N 10%	1
C348	J707438P5	CAP CER CL2 1N 10%	1
C350	J707436P3	CAP CER NPO 1P5 .25P	1
C351	J707436P13	CAP CER NPO 10P 5%	1
C353	J707483P2	CAP PHEN 0P33 5%	1
C354	J707436P13	CAP CER NPO 10P 5%	1
C355	J707483P8	CAP PHEN 1P20 5%	1
C356	J707438P5	CAP CER CL2 1N 10%	1
C357	J707436P1	CAP CER NPO 1P0 .25P	1
C358	J707436P1	CAP CER NPO 1P0 .25P	1
C359	J707436P1	CAP CER NPO 1P0 .25P	1
C401	J707438P8	CAP CER CL2 3N3 10%	1
C402	J707438P8	CAP CER CL2 3N3 10%	1
C403	J707438P8	CAP CER CL2 3N3 10%	1
C404	J707436P9	CAP CER NPO 4P7 .25P	1
C405	J707438P26	CAP CER CL2 100N 10%	1
C406	J707436P10	CAP CER NPO 5P6 .25P	1
C407	J707436P9	CAP CER NPO 4P7 .25P	1
C408	J707438P5	CAP CER CL2 1N 10%	1
C409	J707438P8	CAP CER CL2 3N3 10%	1
C410	J707444P8	CAP TA SOL 22U 16V	1
C411	J707438P26	CAP CER CL2 100N 10%	1
C412	J707438P26	CAP CER CL2 100N 10%	1
C413	J707436P21	CAP CER NPO 15P 5%	1
C414	J707438P8	CAP CER CL2 3N3 10%	1
C415	J707438P8	CAP CER CL2 3N3 10%	1
C416	J708702P16	CAP CER N750 18P 5%	1
C417	J707436P49	CAP CER NPO 56P 5%	1
C418	J707438P14	CAP CER CL2 10N 10%	1
C419	J707438P26	CAP CER CL2 100N 10%	1
C420	J707438P14	CAP CER CL2 10N 10%	1

DATE: 2/29/1988

Pos	Code No	Description	Qt
C421	J707438P26	CAP CER CL2 100N 10%	1
C422	J707438P26	CAP CER CL2 100N 10%	1
C423	J707436P13	CAP CER NPO 10P 5%	1
C424	J707438P8	CAP CER CL2 3N3 10%	1
C425	J707412P13	CAP PYES 470N 10%	1
C426	J707436P93	CAP CER NPO 2N2 5%	1
C427	J707436P73	CAP CER NPO 330P 5%	1
C428	J707436P73	CAP CER NPO 330P 5%	1
C429	J707438P14	CAP CER CL2 10N 10%	1
C430	J707444P8	CAP TA SOL 22U 16V	1
C431	J707444P8	CAP TA SOL 22U 16V	1
C432	J707438P26	CAP CER CL2 100N 10%	1
C433	J707438P26	CAP CER CL2 100N 10%	1
C434	J707438P8	CAP CER CL2 3N3 10%	1
C435	J707436P1	CAP CER NPO 1P0 .25P	1
C436	J707438P26	CAP CER CL2 100N 10%	1
C501	J707412P11	CAP PYES 220N 10%	1
C502	J707412P11	CAP PYES 220N 10%	1
C503	J707412P11	CAP PYES 220N 10%	1
C504	A700235P7	CAP CER N150 3P3 .25P	1
C505	A700235P4	CAP CER N150 1P8 .25P	1
C506	A700235P12	CAP CER N150 8P2 .25P	1
C507	A700235P14	CAP CER N150 12P 5%	1
C508	A700235P32	CAP CER N150 11P 5%	1
C509	A700235P10	CAP CER N150 5P6 .25P	1
C510	A700235P16	CAP CER N150 18P 5%	1
C512	J707483P7	CAP PHEN 1P00 5%	1
C513	J707438P3	CAP CER CL2 470P 10%	1
C515	J707436P12	CAP CER NPO 8P2 .25P	1
C516	J707436P11	CAP CER NPO 6P8 .25P	1
C517	J707444P6	CAP TA SOL 4U7 35V	1
C518	J707436P3	CAP CER NPO 1P5 .25P	1
C519	J707438P3	CAP CER CL2 470P 10%	1
C520	J707436P5	CAP CER NPO 2P2 .25P	1
C521	J707436P17	CAP CER NPO 12P 5%	1
C522	J707438P3	CAP CER CL2 470P 10%	1
C523	J707436P5	CAP CER NPO 2P2 .25P	1

Pos	Code No	Description	Qt
C524	J707438P3	CAP CER CL2 470P 10%	1
C525	J707438P3	CAP CER CL2 470P 10%	1
C526	J707438P3	CAP CER CL2 470P 10%	1
C527	J707438P3	CAP CER CL2 470P 10%	1
C528	J707438P3	CAP CER CL2 470P 10%	1
C540	J707438P3	CAP CER CL2 470P 10%	1
C541	J707438P3	CAP CER CL2 470P 10%	1
C542	J707438P3	CAP CER CL2 470P 10%	1
C543	J707438P3	CAP CER CL2 470P 10%	1
C544	J707438P3	CAP CER CL2 470P 10%	1
C545	J707438P3	CAP CER CL2 470P 10%	1
C601	J707412P11	CAP PYES 220N 10%	1
C602	J707412P11	CAP PYES 220N 10%	1
C603	J707412P11	CAP PYES 220N 10%	1
C604	A700235P5	CAP CER N150 2P2 .25P	1
C605	A700235P5	CAP CER N150 2P2 .25P	1
C606	A700235P8	CAP CER N150 3P9 .25P	1
C607	A700235P10	CAP CER N150 5P6 .25P	1
C608	A700235P11	CAP CER N150 6P8 .25P	1
C609	A700235P36	CAP CER N150 7P5 .25P	1
C610	A700235P12	CAP CER N150 8P2 .25P	1
C611	J707436P7	CAP CER NPO 3P3 .25P	1
C612	J707436P9	CAP CER NPO 4P7 .25P	1
C613	J707444P6	CAP TA SOL 4U7 35V	1
C614	J707436P1	CAP CER NPO 1P0 .25P	1
C615	J707436P77	CAP CER NPO 470P 5%	1
C616	J707438P3	CAP CER CL2 470P 10%	1
C617	J707436P1	CAP CER NPO 1P0 .25P	1
C618	J707436P10	CAP CER NPO 5P6 .25P	1
C619	J707438P3	CAP CER CL2 470P 10%	1
C620	J707436P5	CAP CER NPO 2P2 .25P	1
C621	J707438P3	CAP CER CL2 470P 10%	1
C624	J707436P69	CAP CER NPO 220P 5%	1
C625	J707438P26	CAP CER CL2 100N 10%	1
C626	J707438P5	CAP CER CL2 1N 10%	1
C627	J707438P14	CAP CER CL2 10N 10%	1
C628	J707436P93	CAP CER NPO 2N2 5%	1

DATE: 2/29/1988

Pos	Code No	Description	Qt
C629	J707436P65	CAP CER NPO 150P 5%	1
C630	J707436P69	CAP CER NPO 220P 5%	1
C631	J707436P69	CAP CER NPO 220P 5%	1
C632	J707438P26	CAP CER CL2 100N 10%	1
C633	J707444P17	CAP TA SOL 47U 10V	1
C634	J707438P26	CAP CER CL2 100N 10%	1
C635	J707438P3	CAP CER CL2 470P 10%	1
C636	J707444P17	CAP TA SOL 47U 10V	1
C637	J707438P26	CAP CER CL2 100N 10%	1
C639	J707438P8	CAP CER CL2 3N3 10%	1
C640	J707412P9	CAP PYES 100N 10%	1
C641	J707412P13	CAP PYES 470N 10%	1
C642	J707412P13	CAP PYES 470N 10%	1
C643	J707438P22	CAP CER CL2 47N 10%	1
C644	J707436P6	CAP CER NPO 2P7 .25P	1
C652	J707438P5	CAP CER CL2 1N 10%	1
C653	J707444P6	CAP TA SOL 4U7 35V	1
C656	J707436P77	CAP CER NPO 470P 5%	1
C657	J707438P3	CAP CER CL2 470P 10%	1
C659	J707438P5	CAP CER CL2 1N 10%	1
C660	J707438P12	CAP CER CL2 6N8 5%	1
C665	J707438P3	CAP CER CL2 470P 10%	1
C666	J707438P3	CAP CER CL2 470P 10%	1
C667	J707438P3	CAP CER CL2 470P 10%	1
C668	J707436P61	CAP CER NPO 100P 5%	1
C701	J707436P29	CAP CER NPO 22P 5%	1
C702	J708702P22	CAP CER N750 56P 5%	1
C703	J707436P69	CAP CER NPO 220P 5%	1
C704	J707436P13	CAP CER NPO 10P 5%	1
C705	J707438P5	CAP CER CL2 1N 10%	1
C706	J707438P14	CAP CER CL2 10N 10%	1
C707	J707436P10	CAP CER NPO 5P6 .25P	1
C708	J707438P14	CAP CER CL2 10N 10%	1
C709	J707438P14	CAP CER CL2 10N 10%	1
D100	A700047P3	DIO SI SIG 1N6263	1
D101	J706892P1	DIO SI PIN UM 9401	1
D102	J706892P1	DIO SI PIN UM 9401	1

Pos	Code No	Description	Qt
D103	J707390P1	DIO SI SIG BAV 74	1
D300	J707928P2	DIO SI CAP BB 809	1
D301	J707928P2	DIO SI CAP BB 809	1
D302	J707928P2	DIO SI CAP BB 809	1
D303	J707928P2	DIO SI CAP BB 809	1
D304	J707928P2	DIO SI CAP BB 809	1
D305	J707928P2	DIO SI CAP BB 809	1
D306	J707928P2	DIO SI CAP BB 809	1
D307	J707928P2	DIO SI CAP BB 809	1
D401	A700025P8	DIO SI ZENR 6V8 5% 0.4W	1
D501	J706007P1	DIO SI CAP BB505B	1
D502	J706007P1	DIO SI CAP BB505B	1
D503	J706007P1	DIO SI CAP BB505B	1
D504	J707928P2	DIO SI CAP BB 809	1
D505	J707769P1	DIO SI CAP BBY 31	1
D601	J706007P1	DIO SI CAP BB505B	1
D602	J706007P1	DIO SI CAP BB505B	1
D603	J706007P1	DIO SI CAP BB505B	1
D604	J706007P1	DIO SI CAP BB505B	1
D605	J707389P1	DIO SI SIG BAV 99	1
D606	J708681P1	DIO SI SIG BAW 56	1
D607	J707390P1	DIO SI SIG BAV 74	1
D608	J707390P1	DIO SI SIG BAV 74	1
D610	J708681P1	DIO SI SIG BAW 56	1
D701	J707928P2	DIO SI CAP BB 809	1
D702	J707390P1	DIO SI SIG BAV 74	1
L100	A700024P1	COIL RF FIX 0.1UH 10%	1
L101	A700024P1	COIL RF FIX 0.1UH 10%	1
L102	K805653G5	COIL ASM 5 1/2T	1
L103	J707339G1	COIL FIX ASM	1
L104	A700024P1	COIL RF FIX 0.1UH 10%	1
L105	K805653G1	COIL ASM 1 1/2T	1
L106	J707256P2	COIL FIX	1
L107	J707339G1	COIL FIX ASM	1
L108	K805653G2	COIL ASM 2 1/2T G1/G2/G3	1
L108	K805653G6	COIL ASM 6 1/2T G4/G5/G6	1
L109	J707339G1	COIL FIX ASM	1

DATE: 2/29/1988

Pos	Code No	Description		Qt
L110	J707256P1	COIL FIX	G1/G2/G3	1
L110	J707256P2	COIL FIX	G4/G5/G6	1
L112	J707339G1	COIL FIX ASM		1
L113	A700024P13	COIL RF FIX 1.0UH 10%		1
L114	K805653G2	COIL ASM 2 1/2T	G1/G2/G4	1
L114	K805653G4	COIL ASM 4 1/2T	G4/G5/G6	1
L115	J709287P1	CORE TOR FERR		1
L116	J709287P1	CORE TORFERR	G1/G2/G3	1
L117	K805653G4	COIL ASM 4 1/2T	G1/G2/G3	1
L118	J707339G1	COIL FIX ASM	G1/G2/G3	1
L119	K805653G4	COIL ASM 4 1/2T	G1/G2/G3	1
L120	J707256P2	COIL FIX	G1/G2/G3	1
L120	J707256P1	COIL FIX	G4/G5/G6	1
L121	A700024P13	COIL RF FIX 1.0UH 10%		1
L122	A700024P25	COIL RF FIX 10UH 10%		1
L123	A700024P25	COIL RF FIX 10UH 10%		1
L124	K805653G5	COIL ASM 5 1/2T		1
L125	K805653G6	COIL ASM 6 1/2T		1
L126	K805653G5	COIL ASM 5 1/2T		1
L127	A700024P25	COIL RF FIX 10UH 10%		1
L128	A700024P25	COIL RF FIX 10UH 10%		1
L129	A700024P13	COIL RF FIX 1.0UH 10%		1
L130	K805653G2	COIL ASM 2 1/2T	G1/G2/G3	1
L130	K805653G1	COIL ASM 1 1/2T	G4/G5/G6	1
L131	K805653G3	COIL ASM 3 1/2T	G1/G2/G3	1
L131	K805653G2	COIL ASM 2 1/2T	G4/G5/G6	1
L301	J709099P13	COIL RF VAR 4-1/2T TAP		1
L302	J709099P13	COIL RF VAR 4-1/2T TAP		1
L303	J707486P6	COIL RF FIX 0.47UH 10%		1
L304	J709099P2	COIL RF VAR 4-1/2T TAP		1
L305	J707486P2	COIL RF FIX 3.3UH 10%		1
L306	J709099P7	COIL RF VAR 4-1/2T TAP		1
L308	J709099P6	COIL RF VAR 4-1/2T TAP		1
L310	J709099P2	COIL RF VAR 4-1/2T TAP		1
L312	J708428P2	COIL RF VAR 45 MHZ		1
L313	J709099P4	COIL RF VAR 3-1/2T TAP		1
L314	J709099P3	COIL RF VAR 3-1/2T TAP		1

Pos	Code No	Description		Qt
L401	J707486P10	COIL RF FIX 1.5UH 10%		1
L403	K805570G2	COIL ASM		1
L404	K805570G1	COIL ASM		1
L405	J708428P1	COIL RF VAR 45 MHZ		1
L406	K805570G3	COIL ASM		1
L407	A700024P25	COIL RF FIX 10UH 10%		1
L408	J708428P2	COIL RF VAR 45 MHZ		1
L409	J707431P1	COIL RF VAR 455KHZ 25%		1
L410	J707431P1	COIL RF VAR 455KHZ 25%		1
L501	A700024P13	COIL RF FIX 1.0UH 10%		1
L502	A700024P13	COIL RF FIX 1.0UH 10%		1
L503	A700024P13	COIL RF FIX 1.0UH 10%		1
L504	A700024P13	COIL RF FIX 1.0UH 10%		1
L505	L855671P1	COIL RADIO FREQUENCY		1
L506	A700024P13	COIL RF FIX 1.0UH 0%		1
L507	A700024P13	COIL RF FIX 1.0UH 0%		1
L508	A700024P4	COIL RF FIX 0.18UH 10%		1
L601	A700024P13	COIL RF FIX 1.0UH 10%		1
L602	A700024P13	COIL RF FIX 1.0UH 10%		1
L603	A700024P13	COIL RF FIX 1.0UH 10%		1
L604	A700024P13	COIL RF FIX 1.0UH 10%		1
L605	L855671P1	COIL RADIO FREQUENCY		1
L606	A700024P13	COIL RF FIX 1.0UH 10%		1
L607	A700024P13	COIL RF FIX 1.0UH 10%		1
L608	A700024P2	COIL RF FIX 0.12UH 10%		1
L609	K805653G10	COIL RF FIXED 10 1/2T		1
L701	K805570G4	COIL ASM		1
L702	A700024P43	COIL RF FIX 330UH 10%		1
L703	A700024P27	COIL RF FIX 15UH 10%		1
P102	J707064P112	CONN PWB FEM 12-CKT		1
P105	A701883P4	CONN PWB FEM RECP		1
Q100	J707388P1	TSTR NPN SI BFR 53		1
Q101	J707388P1	TSTR NPN SI BFR 53		1
Q102	A701940P1	TSTR NPN SI RF-PWR 0.4W		1
Q103	A700063P1	TSTR NPN SI RF-PWR 2.0W		1
Q104	J709163P1	TSTR NPN SI RF-PWR 10W		1
Q105	J708133P1	TSTR NPN SI RF-PWR 28W	G1/G2/G3	1

DATE: 2/29/1988

Pos	Code No	Description	Qt
Q106	J707432P1	TSTR PNP SI BCX 18	1
Q107	J707386P1	TSTR NPN SI BCW 32	1
Q108	J708406P1	TSTR NPN SI BD 233	1
Q109	J707386P1	TSTR NPN SI BCW 32	1
Q201	J707435P1	TSTR PNP SI BC 369	1
Q202	J707386P1	TSTR NPN SI BCW 32	1
Q203	J707432P1	TSTR PNP SI BCX 18	1
Q204	J707386P1	TSTR NPN SI BCW 32	1
Q301	J706011P2	TSTR NPN SI BFR 91A	1
Q302	J708315P1	TSTR JFET SI 2N5245	1
Q401	J707817P1	TSTR JFET SI J 309	1
Q402	J707817P1	TSTR JFET SI J 309	1
Q403	J707419P1	TSTR JFET SI BF511	1
Q404	J708418P1	TSTR NPN SI BFS 20	1
Q405	J708418P1	TSTR NPN SI BFS 20	1
Q406	J708418P1	TSTR NPN SI BFS 20	1
Q407	J707386P1	TSTR NPN SI BCW 32	1
Q408	J707387P1	TSTR PNP SI BCW 30	1
Q501	J707817P1	TSTR JFET SI J 309	1
Q502	J707388P1	TSTR NPN SI BFR 53	1
Q601	J707817P1	TSTR JFET SI J 309	1
Q602	J707388P1	TSTR NPN SI BFR 53	1
Q603	J708318P1	TSTR PNP SI BFT 92	1
Q604	J707433P1	TSTR MFET SI BF 989	1
Q605	J707386P1	TSTR NPN SI BCW 32	1
Q612	J707386P1	TSTR NPN SI BCW 32	1
Q613	J707386P1	TSTR NPN SI BCW 32	1
Q701	J707419P1	TSTR JFET SI BF511	1
Q702	J707387P1	TSTR PNP SI BCW 30	1
R000	J707385P332	RES MFLM 1/8W 3K3 5%	1
R100	J707385P122	RES MFLM 1/8W 1K2 5%	1
R101	J707385P472	RES MFLM 1/8W 4K7 5%	1
R102	J707385P270	RES MFLM 1/8W 27R 5%	1
R103	J707385P470	RES MFLM 1/8W 47R 5%	1
R104	J707385P102	RES MFLM 1/8W 1K0 5%	1
R105	J707385P182	RES MFLM 1/8W 1K8 5%	1
R106	J707385P470	RES MFLM 1/8W 47R 5%	1

Pos	Code No	Description	Qt
R107	J707385P680	RES MFLM 1/8W 68R 5%	1
R108	J707385P820	RES MFLM 1/8W 82R 5%	1
R109	J707385P100	RES MFLM 1/8W 10R 5%	1
R110	J707385P100	RES MFLM 1/8W 10R 5%	1
R111	J707385P100	RES MFLM 1/8W 10R 5%	1
R112	J707385P947	RES MFLM 1/8W 4R7 20%	1
R113	J707385P100	RES MFILM 1/8W 10R 5%	1
R114	J707385P947	RES MFLM 1/8W 4R7 20%	1
R115	J707385P100	RES MFLM 1/8W 10R 5% G1/G2/G3	1
R116	J707385P220	RES MFLM 1/8W 22R 5% G1/G2/G3	1
R117	J707385P220	RES MFLM 1/8W 22R 5% G1/G2/G3	1
R118	J707385P473	RES MFLM 1/8W 47K 5%	1
R119	J707385P820	RES MFLM 1/8W 82R 5%	1
R120	J707385P820	RES MFLM 1/8W 82R 5%	1
R121	J707385P333	RES MFLM 1/8W 33K 5%	1
R122	J707385P221	RES MFLM 1/8W 220R 5%	1
R123	J707385P221	RES MFLM 1/8W 220R 5%	1
R132	J708538P9	RES VAR CERM 200K 20%	1
R133	J708538P4	RES VAR CERM 5K0 20%	1
R134	J707385P100	RES MFLM 1/8W 10R 5%	1
R135	J706147P2	RES THERM PTC 80R 25%	1
R136	J707385P682	RES MFLM 1/8W 6K8 5%	1
R137	J707385P223	RES MFLM 1/8W 22K 5%	1
R138	J707385P472	RES MFLM 1/8W 4K7 5%	1
R139	J707385P472	RES MFLM 1/8W 4K7 5%	1
R140	J707385P333	RES MFLM 1/8W 33K 5%	1
R141	J707385P333	RES MFLM 1/8W 33K 5%	1
R142	J707385P104	RES MFLM 1/8W 100K 5%	1
R143	J707385P222	RES MFLM 1/8W 2K2 5%	1
R144	J707385P222	RES MFLM 1/8W 2K2 5%	1
R145	J707385P682	RES MFLM 1/8W 6K8 5%	1
R146	J707385P273	RES MFLM 1/8W 27K 5%	1
R147	J707385P104	RES MFLM 1/8W 100K 5%	1
R148	J707385P123	RES MFLM 1/8W 12K 5%	1
R149	J707385P472	RES MFLM 1/8W 4K7 5%	1
R150	J707385P391	RES MFLM 1/8W 390R 5%	1
R151	J707385P683	RES MFLM 1/8W 68K 5%	1

DATE: 2/29/1988

Pos	Code No	Description	Qt
R152	J707385P104	RES MFLM 1/8W 100K 5%	1
R153	J707385P221	RES MFLM 1/8W 220R 5%	1
R154	J707385P274	RES MFLM 1/8W 270K 5%	1
R155	J707385P222	RES MFLM 1/8W 2K2 5%	1
R156	J707385P102	RES MFLM 1/8W 1K0 5%	1
R157	J707385P392	RES MFLM 1/8W 3K9 5%	1
R201	J707385P561	RES MFLM 1/8W 560R 5%	1
R202	J707385P271	RES MFLM 1/8W 270R 5%	1
R203	J707385P153	RES MFLM 1/8W 15K 5%	1
R204	J707385P153	RES MFLM 1/8W 15K 5%	1
R205	J707385P472	RES MFLM 1/8W 4K7 5%	1
R206	J707385P272	RES MFLM 1/8W 2K7 5%	1
R207	J707385P563	RES MFLM 1/8W 56K 5%	1
R208	J707385P563	RES MFLM 1/8W 56K 5%	1
R209	J707385P271	RES MFLM 1/8W 270R 5%	1
R301	J707385P471	RES MFLM 1/8W 470R 5%	1
R302	J707385P391	RES MFLM 1/8W 390R 5%	1
R303	J707385P104	RES MFLM 1/8W 100K 5%	1
R304	J707385P104	RES MFLM 1/8W 100K 5%	1
R305	J707385P900	RES MFLM 1/8W OR JUMPER	1
R306	J707385P222	RES MFLM 1/8W 2K2 5%	1
R307	J707385P681	RES MFLM 1/8W 680R 5%	1
R308	J707385P470	RES MFLM 1/8W 47R 5%	1
R309	J707385P270	RES MFLM 1/8W 27R 5%	1
R310	J707385P104	RES MFLM 1/8W 100K 5%	1
R311	J707385P560	RES MFLM 1/8W 56R 5%	1
R312	J707385P104	RES MFLM 1/8W 100K 5%	1
R314	J707385P104	RES MFLM 1/8W 100K 5%	1
R316	J707385P104	RES MFLM 1/8W 100K 5%	1
R317	J707385P182	RES MFLM 1/8W 1K8 5%	1
R318	J707385P100	RES MFLM 1/8W 10R 5%	1
R319	J707385P101	RES MFLM 1/8W 100R 5%	1
R321	J707385P270	RES MFLM 1/8W 27R 5%	1
R322	J707385P391	RES MFLM 1/8W 390R 5%	1
R323	J707385P104	RES MFLM 1/8W 100K 5%	1
R324	J707385P104	RES MFLM 1/8W 100K 5%	1
R325	J707385P100	RES MFLM 1/8W 10R 5%	1

Pos	Code No	Description	Qt
R326	J707385P392	RES MFLM 1/8W 3K9 5%	1
R327	J707385P102	RES MFLM 1/8W 1K0 5%	1
R401	J707385P560	RES MFLM 1/8W 56R 5%	1
R402	J707385P100	RES MFLM 1/8W 10R 5%	1
R403	J707385P332	RES MFLM 1/8W 3K3 5%	1
R405	J707385P100	RES MFLM 1/8W 10R 5%	1
R406	J707385P820	RES MFLM 1/8W 82R 5%	1
R407	J707385P470	RES MFLM 1/8W 47R 5%	1
R408	J707385P470	RES MFLM 1/8W 47R 5%	1
R410	J707385P272	RES MFLM 1/8W 2K7 5%	1
R411	J707385P682	RES MFLM 1/8W 6K8 5%	1
R412	J707385P272	RES MFLM 1/8W 2K7 5%	1
R413	J707385P821	RES MFLM 1/8W 820R 5%	1
R414	J707385P220	RES MFLM 1/8W 22R 5%	1
R415	J707385P222	RES MFLM 1/8W 2K2 5%	1
R416	J707385P562	RES MFLM 1/8W 5K6 5%	1
R417	J707385P103	RES MFLM 1/8W 10K 5%	1
R418	J707385P153	RES MFLM 1/8W 15K 5%	1
R419	J707385P182	RES MFLM 1/8W 1K8 5%	1
R420	J707385P182	RES MFLM 1/8W 1K8 5%	1
R421	J707385P182	RES MFLM 1/8W 1K8 5%	1
R422	J707385P473	RES MFLM 1/8W 47K 5%	1
R423	J707385P153	RES MFLM 1/8W 15K 5%	1
R424	J708538P5	RES VAR CERM 10K 20%	1
R425	J707385P272	RES MFLM 1/8W 2K7 5%	1
R426	J707385P563	RES MFLM 1/8W 56K 5%	1
R427	J707385P273	RES MFLM 1/8W 27K 5%	1
R428	J707385P683	RES MFLM 1/8W 68K 5%	1
R429	J707385P104	RES MFLM 1/8W 100K 5%	1
R430	J707385P334	RES MFLM 1/8W 330K 5%	1
R431	J707385P473	RES MFLM 1/8W 47K 5%	1
R432	J707385P473	RES MFLM 1/8W 47K 5%	1
R433	J707385P271	RES MFLM 1/8W 270R 5%	1
R434	J707385P102	RES MFLM 1/8W 1K0 5%	1
R435	J706147P3	RES THERM PTC 250R 25%	1
R436	J707385P392	RES MFLM 1/8W 3K9 5%	1
R437	J707406P7	RES THERM NTC 220R 10%	1

DATE: 2/29/1988

Pos	Code No	Description	Qt
R438	J707385P222	RES MFLM 1/8W 2K2 5%	1
R439	J707385P392	RES MFLM 1/8W 3K9 5%	1
R440	J707385P392	RES MFLM 1/8W 3K9 5%	1
R441	J707385P101	RES MFLM 1/8W 100R 5%	1
R442	J708538P6	RES VAR CERM 20K 20%	1
R444	J707385P473	RES MFLM 1/8W 47K 5%	1
R445	J707385P273	RES MFLM 1/8W 27K 5%	1
R446	J707385P224	RES MFLM 1/8W 220K 5%	1
R447	J707385P392	RES MFLM 1/8W 3K9 5%	1
R448	J707385P101	RES MFLM 1/8W 100R 5%	1
R449	J707385P470	RES MFLM 1/8W 47R 5%	1
R450	J707385P103	RES MFLM 1/8W 10K 5%	1
R451	J707385P332	RES MFLM 1/8W 3K3 5%	1
R501	J707385P122	RES MFLM 1/8W 1K2 5%	1
R502	J707385P122	RES MFLM 1/8W 1K2 5%	1
R503	J707385P122	RES MFLM 1/8W 1K2 5%	1
R504	J707385P104	RES MFLM 1/8W 100K 5%	1
R505	J707385P104	RES MFLM 1/8W 100K 5%	1
R506	J707385P104	RES MFLM 1/8W 100K 5%	1
R508	J707385P103	RES MFLM 1/8W 10K 5%	1
R509	J707385P910	RES MFLM 1/8W 1R0 20%	1
R510	J707385P332	RES MFLM 1/8W 3K3 5%	1
R512	J707385P561	RES MFLM 1/8W 560R 5%	1
R513	J707385P183	RES MFLM 1/8W 18K 5%	1
R514	J707385P472	RES MFLM 1/8W 4K7 5%	1
R515	J707385P470	RES MFLM 1/8W 47R 5%	1
R517	J707385P101	RES MFLM 1/8W 100R 5%	1
R518	J707385P470	RES MFLM 1/8W 47R 5%	1
R519	J707385P221	RES MFLM 1/8W 220R 5%	1
R529	J707385P392	RES MFLM 1/8W 3K9 5%	1
R601	J707385P122	RES MFLM 1/8W 1K2 5%	1
R602	J707385P122	RES MFLM 1/8W 1K2 5%	1
R603	J707385P122	RES MFLM 1/8W 1K2 5%	1
R604	J707385P104	RES MFLM 1/8W 100K 5%	1
R605	J707385P104	RES MFLM 1/8W 100K 5%	1
R606	J707385P104	RES MFLM 1/8W 100K 5%	1
R607	J707385P561	RES MFLM 1/8W 560R 5%	1

Pos	Code No	Description	Qt
R608	J707385P221	RES MFLM 1/8W 220R 5%	1
R609	J707385P472	RES MFLM 1/8W 4K7 5%	1
R610	J707385P183	RES MFLM 1/8W 18K 5%	1
R611	J707385P271	RES MFLM 1/8W 270R 5%	1
R612	J707385P222	RES MFLM 1/8W 2K2 5%	1
R613	J707385P101	RES MFLM 1/8W 100R 5%	1
R614	J707385P561	RES MFLM 1/8W 560R 5%	1
R615	J707385P272	RES MFLM 1/8W 2K7 5%	1
R616	J707385P470	RES MFLM 1/8W 47R 5%	1
R617	J707385P683	RES MFLM 1/8W 68K 5%	1
R618	J707385P683	RES MFLM 1/8W 68K 5%	1
R619	J707385P104	RES MFLM 1/8W 100K 5%	1
R620	J707385P271	RES MFLM 1/8W 270R 5%	1
R621	J707385P561	RES MFLM 1/8W 560R 5%	1
R622	J707385P102	RES MFLM 1/8W 1K0 5%	1
R623	J707385P224	RES MFLM 1/8W 220K 5%	1
R624	J707385P223	RES MFLM 1/8W 22K 5%	1
R625	J707385P470	RES MFLM 1/8W 47R 5%	1
R626	J707385P100	RES MFLM 1/8W 10R 5%	1
R627	J707385P103	RES MFLM 1/8W 10K 5%	1
R628	J707385P224	RES MFLM 1/8W 220K 5%	1
R629	J707385P393	RES MFLM 1/8W 39K 5%	1
R630	J707385P100	RES MFLM 1/8W 10R 5%	1
R631	J707385P824	RES MFLM 1/8W 820K 5%	1
R632	J707385P223	RES MFLM 1/8W 22K 5%	1
R633	J707385P824	RES MFLM 1/8W 820K 5%	1
R634	J707385P123	RES MFLM 1/8W 12K 5%	1
R635	J707385P102	RES MFLM 1/8W 1K0 5%	1
R636	J707385P332	RES MFLM 1/8W 3K3 5%	1
R637	J707385P181	RES MFLM 1/8W 180R 5%	1
R638	J707385P154	RES MFLM 1/8W 150K 5%	1
R639	J707385P682	RES MFLM 1/8W 6K8 5%	1
R640	J707385P105	RES MFLM 1/8W 1M0 10%	1
R641	J707385P184	RES MFLM 1/8W 180K 5%	1
R642	J707385P184	RES MFLM 1/8W 180K 5%	1
R643	J707385P105	RES MFLM 1/8W 1M0 10%	1
R644	J707385P333	RES MFLM 1/8W 33K 5%	1

DATE: 2/29/1988

Pos	Code No	Description	Qt
R645	J707385P103	RES MFLM 1/8W 10K 5%	1
R646	J707385P682	RES MFLM 1/8W 6K8 5%	1
R647	J707385P333	RES MFLM 1/8W 33K 5%	1
R648	J707385P823	RES MFLM 1/8W 82K 5%	1
R649	J707385P393	RES MFLM 1/8W 39K 5%	1
R650	J707385P393	RES MFLM 1/8W 39K 5%	1
R651	J707385P333	RES MFLM 1/8W 33K 5%	1
R652	J707385P222	RES MFLM 1/8W 2K2 5%	1
R653	J707385P333	RES MFLM 1/8W 33K 5%	1
R654	J707385P562	RES MFLM 1/8W 5K6 5%	1
R655	J707385P183	RES MFLM 1/8W 18K 5%	1
R656	J707385P393	RES MFLM 1/8W 39K 5%	1
R657	J707385P823	RES MFLM 1/8W 82K 5%	1
R658	J707385P154	RES MFLM 1/8W 150K 5%	1
R659	J707385P103	RES MFLM 1/8W 10K 5%	1
R660	J707385P333	RES MFLM 1/8W 33K 5%	1
R661	J707385P393	RES MFLM 1/8W 39K 5%	1
R662	J707385P473	RES MFLM 1/8W 47K 5%	1
R663	J708538P6	RES VAR CERM 20K20%	1
R664	J707385P563	RES MFLM 1/8W 56K 5%	1
R665	J707385P224	RES MFLM 1/8W 220K 5%	1
R666	J707385P124	RES MFLM 1/8W 120K 5%	1
R667	J707385P124	RES MFLM 1/8W 120K 5%	1
R668	J707385P122	RES MFLM 1/8W 1K2 5%	1
R669	J707385P221	RES MFLM 1/8W 220R 5%	1
R670	J707385P103	RES MFLM 1/8W 10K 5%	1
R671	J707385P562	RES MFLM 1/8W 5K6 5%	1
R672	J707385P822	RES MFLM 1/8W 8K2 5%	1
R673	J707385P822	RES MFLM 1/8W 8K2 5%	1
R674	J707385P101	RES MFLM 1/8W 100R 5%	1
R675	J708538P5	RES VAR CERM 10K 20%	1
R676	J707385P102	RES MFLM 1/8W 1K0 5%	1
R677	J708538P5	RES VAR CERM 10K 20%	1
R678	J707385P470	RES MFLM 1/8W 47R 5%	1
R679	J707385P821	RES MFLM 1/8W 820R 5%	1
R680	J708538P6	RES VAR CERM 20K 20%	1
R681	J707385P223	RES MFLM 1/8W 22K 5%	1

Pos	Code No	Description		Qt
R682	J707385P152	RES MFLM 1/8W 1K5 5%		1
R683	J707385P223	RES MFLM 1/8W 22K 5%		1
R684	J707385P183	RES MFLM 1/8W 18K 5%		1
R685	J707385P183	RES MFLM 1/8W 18K 5%		1
R686	J707385P103	RES MFLM 1/8W 10K 5%		1
R687	J707385P103	RES MFLM 1/8W 10K 5%		1
R689	J707385P105	RES MFLM 1/8W 1M0 10%		1
R690	J707385P124	RES MFLM 1/8W 120K 5%		1
R691	J707385P273	RES MFLM 1/8W 27K 5%		1
R692	J707385P223	RES MFLM 1/8W 22K 5%		1
R693	J707385P105	RES MFLM 1/8W 1M0 10%		1
R694	J707385P223	RES MFLM 1/8W 22K 5%		1
R695	J707385P105	RES MFLM 1/8W 1M0 10%		1
R696	J707385P223	RES MFLM 1/8W 22K 5%		1
R697	J707385P105	RES MFLM 1/8W 1M0 10%		1
R698	J707385P103	RES MFLM 1/8W 10K 5%		1
R701	J708666P1	RES THERM NTC 5K 2%		1
R702	A701250P413	RES MFILM 133K 1% 1/4W		1
R703	A701250P213	RES MFILM 1K33 1% 1/4W		1
R704	A701250P325	RES MFILM 17K8 1% 1/4W		1
R705	J708666P2	RES THERM NTC 20K 2%		1
R706	J708666P2	RES THERM NTC 20K 2%		1
R707	J707385P104	RES MFLM 1/8W 100K 5%		1
R708	J707385P105	RES MFLM 1/8W 1M0 10%		1
R709	J707385P181	RES MFLM 1/8W 180R 5%		1
R710	J707385P101	RES MFLM 1/8W 100R 5%		1
R711	J707385P223	RES MFLM 1/8W 22K 5%		1
R712	J707385P154	RES MFLM 1/8W 150K 5%		1
R713	J707385P821	RES MFLM 1/8W 820R 5%		1
R714	J707385P104	RES MFLM 1/8W 100K 5%		1
U100	J708165P2	IC LIN OP-AMP 324		1
U201	J708333P1	IC LIN VR FIX 4785		1
U401	J707449P1	IC LIN IF-AMP 3357		1
U402	M905766G1	INT CKT SQ 4002	G1/G2/G4/G5	1
U402	M905766G2	INT CKT SQ 4003	G3/G6	1
U601	J707859P1	IC LIN OP-AMP 204		1
U602	J707859P1	IC LIN OP-AMP 204		1

DATE: 2/29/1988

Pos	Code No	Description	Qt
U603	J707859P1	IC LIN OP-AMP 204	1
U604	J707859P1	IC LIN OP-AMP 204	1
U606	J707243P1	IC DIG REG 4094	1
U607	J707374P3	IC PLL PRESC 12017	1
U608	B800902P1	IC PLL SYNCUSTOM DES	1
U609	J707859P1	IC LIN OP-AMP 204	1
U610	J708503P2	IC LIN CMPAR LM 339	1
U615	J708621P2	CPLR OPTO PC 827	1
U616	J708503P2	IC LIN CMPAR LM 339	1
W001	A700184P1	RES WIRE JMPR OR JUMPER	1
W003	J707256P1	COIL FIX	1
W004	J707256P1	COIL FIX	1
W005	J708717P1	STRAP	1
W006	J709241P1	STRAP	1
W007	J709241P1	STRAP	1
Y401	J708426P1	CRYSTAL UNIT 44.5450MHZ	1
Y701	J707367P18	CRYSTAL UNIT 7.3750MHZ	1
Z401	J708330P1	FLTR CRY 45.0 +/-7.5KHZ G1/G4	1
Z401	J708330P2	FLTR CRY 45.0 +/-6KHZ G2/G5	1
Z401	J708330P3	FLTR CRY 45.0 +/-3.75KHZ G3/G6	1
Z402	J707446P1	FLTR CER 455K +/-10KHZ G1/G4	1
Z402	J707446P3	FLTR CER 455K +/-7.5KHZ G2/G5	1
Z402	J707446P4	FLTR CER 455K +/-4.5KHZ G3/G6	1
Z403	J707446P1	FLTR CER 455K +/-10KHZ G1/G4	1
Z403	J707446P3	FLTR CER 455K +/-7.5KHZ G2/G5	1
Z403	J707446P4	FLTR CER 455K +/-4.5KHZ G3/G6	1
	M905762P1R0	BD PW G1/G2/G3	1
	M905762P2R0	BD PW G4/G5/G6	1
		NON ELECTRONICAL PARTS	
	J708966G1	HEAT SINK MODF	1
	K805569G2	SHIELD METALLIZED	1
	J706281P6	CORE SCREW FERR U10	8
	J708561P3	COIL FIX	1
	J708561P3	COIL FIX	1
	J708561P3	COIL FIX	1

Pos	Code No	Description	Qt

DATE. 9/23/1987

Pos	Code No	Description		Qt
C000	J707438P8	CAP CER CL2 3N3 10%		1
C001	J707809P5	CAP CER NPO 2P2.25P	G1/G2/G3	1
C100	J707809P10	CAP CER NPO 5P6 .25P		1
C101	J707438P4	CAP CER CL2 680P 10%		1
C102	J707809P8	CAP CER NPO 3P9 .25P		1
C103	J707809P27	CAP CER NPO 150P 5%		1
C104	J707809P19	CAP CER NPO 33P 5%		1
C105	J707809P13	CAP CER NPO 10P 5%		1
C106	J707438P14	CAP CER CL2 10N 10%		1
C107	J707809P25	CAP CER NPO 100P 5%		1
C108	J707809P22	CAP CER NPO 56P 5%		1
C109	J707809P17	CAP CER NPO 22P 5%		1
C110	J707438P14	CAP CER CL2 10N 10%		1
C111	J707809P25	CAP CER NPO 100P 5%		1
C112	J707438P4	CAP CER CL2 680P 10%		1
C113	J707809P21	CAP CER NPO 47P 5%		1
C114	J707809P25	CAP CER NPO 100P 5%		1
C115	J707809P24	CAP CER NPO 82P 5%		1
C116	J707438P14	CAP CER CL2 10N 10%		1
C117	J707809P26	CAP CER NPO 120P 5%		1
C118	J707438P14	CAP CER CL2 10N 10%		1
C119	J707438P4	CAP CER CL2 680P 10%		1
C120	J707809P23	CAP CER NPO 68P 5%		1
C121	J707809P23	CAP CER NPO 68P 5%		1
C122	A700006P34	CAP MICA 100P 5%	G1/G2/G3	1
C122	A700006P38	CAP MICA 150P 5%	G4/G5/G6	1
C123	J707438P14	CAP CER CL2 10N 10%		1
C124	J707809P26	CAP CER NPO 120P 5%		1
C125	J707438P4	CAP CER CL2 680P 10%		1
C126	J707438P14	CAP CER CL2 10N 10%		1
C127	J707353P6	CAP ELECT 4U7 25V		1
C128	J707809P27	CAP CER NPO 150P 5%		1
C129	J707809P27	CAP CER NPO 150P 5%		1
C130	A700006P32	CAP MICA 82P 5%	G1/G2/G3	1
C130	A700006P30	CAP MICA 68P 5%	G4/G5/G6	1
C131	A700006P41	CAP MICA 180P 5%	G1/G2/G3	1
C131	A700006P38	CAP MICA 150P 5%	G4/G5/G6	1

Pos	Code No	Description		Qt
C132	A700006P41	CAP MICA 180P 5%	G1/G2/G3	1
C133	J707438P26	CAP CER CL2 100N 10%	G1/G2/G3	1
C134	J707809P26	CAP CER NPO 120P 5%	G1/G2/G4	1
C135	J707438P4	CAP CER CL2 680P 10%		1
C136	A700006P26	CAP MICA 47P 5%	G1/G2/G3	1
C137	A700006P34	CAP MICA 100P 5%	G1/G2/G3	1
C138	J707809P27	CAP CER NPO 150P 5%		1
C139	J707809P27	CAP CER NPO 150P 5%		1
C140	J707809P27	CAP CER NPO 150P 5%		1
C141	J707809P27	CAP CER NPO 150P 5%		1
C142	A700006P6	CAP MICA 10P 5%		1
C143	A700006P22	CAP MICA 36P 5%		1
C144	A700006P22	CAP MICA 36P 5%		1
C145	A700006P11	CAP MICA 15P 5%		1
C146	J707438P4	CAP CER CL2 680P 10%		1
C147	J707438P4	CAP CER CL2 680P 10%		1
C148	J707438P4	CAP CER CL2 680P 10%		1
C149	J707438P4	CAP CER CL2 680P 10%		1
C150	J707809P1	CAP CER NPO 1P0 .25P		1
C151	J707809P1	CAP CER NPO 1P0 .25P		1
C152	J707438P4	CAP CER CL2 680P 10%		1
C153	J707438P4	CAP CER CL2 680P 10%		1
C154	J707438P4	CAP CER CL2 680P 10%		1
C155	J707438P4	CAP CER CL2 680P 10%		1
C156	J707353P3	CAP ELECT 0U47 50V		1
C157	J707438P4	CAP CER CL2 680P 10%		1
C158	J707438P4	CAP CER CL2 680P 10%		1
C159	J707438P14	CAP CER CL2 10N 10%		1
C160	J707438P4	CAP CER CL2 680P 10%		1
C161	J707438P14	CAP CER CL2 10N 10%		1
C162	J707438P14	CAP CER CL2 10N 10%		1
C163	J707438P26	CAP CER CL2 100N 10%		1
C164	J707438P4	CAP CER CL2 680P 10%		1
C165	J707438P4	CAP CER CL2 680P 10%		1
C166	J707438P4	CAP CER CL2 680P 10%		1
C167	A701413P34	CAP MICA 100P 5%		1
C168	A700006P28	CAP MICA 56P 5%	G1/G2/G3	1

DATE: 9/23/1987

Pos	Code No	Description		Qt
C168	A700006P32	CAP MICA 82P 5%	G4/G5/G6	1
C169	A700006P9	CAP MICA 13P 5%	G1/G2/G3	1
C169	A700006P22	CAP MICA 36P 5%	G4/G5/G6	1
C170	J707809P8	CAP CER NPO 3P9.25P	G1/G2/G3	1
C170	J707809P13	CAP CER NPO 10P.25P	G4	1
C170	A700006P22	CAP MICA 36P 5%	G5/G6	1
C201	J707438P26	CAP CER CL2 100N 10%		1
C202	J707444P8	CAP TA SOL 22U 16V		1
C203	J707444P6	CAP TA SOL 4U7 35V		1
C204	J707436P77	CAP CER NPO 470P 5%		1
C205	J707412P9	CAP PYES 100N 10%		1
C301	J707436P3	CAP CER NPO 1P5 .25P		1
C302	J707438P5	CAP CER CL2 1N 10%		1
C304	J707436P8	CAP CER NPO 3P9 .25P		1
C305	J707436P21	CAP CER NPO 15P 5%		1
C306	J707483P1	CAP PHEN OP47 5%		1
C307	J707438P5	CAP CER CL2 1N 10%	G1/G2/G3	1
C307	J707438P4	CAP CER CL2 680P 10%	G4/G5/G6	1
C309	J707436P21	CAP CER NPO 15P 5%		1
C310	J707438P5	CAP CER CL2 1N 10%		1
C311	J707438P5	CAP CER CL2 1N 10%		1
C312	J707436P87	CAP CER NPO 1N2 5%		1
C314	J707436P5	CAP CER NPO 2P2 .25P		1
C315	J707438P5	CAP CER CL2 1N 10%		1
C316	J707436P5	CAP CER NPO 2P2 .25P		1
C317	J707444P2	CAP TA SOL 0U22 35V		1
C318	J707438P5	CAP CER CL2 1N 10%		1
C319	J707436P21	CAP CER NPO 15P 5%		1
C320	J707438P5	CAP CER CL2 1N 10%		1
C322	J707483P7	CAP PHEN 1P00 5%		1
C323	J707483P5	CAP PHEN OP68 5%		1
C324	J707483P4	CAP PHEN OP56 5%		1
C325	J707438P5	CAP CER CL2 1N 10%		1
C326	J707436P21	CAP CER NPO 15P 5%		1
C328	J707436P21	CAP CER NPO 15P 5%		1
C331	J707436P21	CAP CER NPO 15P 5%		1
C332	J707436P21	CAP CER NPO 15P 5%		1

Pos	Code No	Description	Qt
C333	J707483P13	CAP PHEN OP22 10%	1
C335	J707438P5	CAP CER CL2 1N 10%	1
C338	J707436P11	CAP CER NPO 6P8 .25P	1
C339	J707438P5	CAP CER CL2 1N 10%	1
C340	J707438P8	CAP CER CL2 3N3 10%	1
C345	J707436P37	CAP CER NPO 33P 5%	1
C347	J707438P5	CAP CER CL2 1N 10%	1
C348	J707438P5	CAP CER CL2 1N 10%	1
C350	J707436P3	CAP CER NPO 1P5 .25P	1
C351	J707436P13	CAP CER NPO 10P 5%	1
C353	J707483P2	CAP PHEN OP33 5%	1
C354	J707436P13	CAP CER NPO 10P 5%	1
C355	J707483P8	CAP PHEN 1P20 5%	1
C356	J707438P5	CAP CER CL2 1N 10%	1
C357	J707436P1	CAP CER NPO 1P0 .25P	1
C358	J707436P1	CAP CER NPO 1P0 .25P	1
C359	J707436P1	CAP CER NPO 1P0 .25P	1
C401	J707438P8	CAP CER CL2 3N3 10%	1
C402	J707438P8	CAP CER CL2 3N3 10%	1
C403	J707438P8	CAP CER CL2 3N3 10%	1
C404	J707436P9	CAP CER NPO 4P7 .25P	1
C405	J707438P26	CAP CER CL2 100N 10%	1
C406	J707436P10	CAP CER NPO 5P6 .25P	1
C407	J707436P9	CAP CER NPO 4P7 .25P	1
C408	J707438P5	CAP CER CL2 1N 10%	1
C409	J707438P8	CAP CER CL2 3N3 10%	1
C410	J707444P8	CAP TA SOL 22U 16V	1
C411	J707438P26	CAP CER CL2 100N 10%	1
C412	J707438P26	CAP CER CL2 100N 10%	1
C413	J707436P21	CAP CER NPO 15P 5%	1
C414	J707438P8	CAP CER CL2 3N3 10%	1
C415	J707438P8	CAP CER CL2 3N3 10%	1
C416	J708702P16	CAP CER N750 18P 5%	1
C417	J707436P49	CAP CER NPO 56P 5%	1
C418	J707438P14	CAP CER CL2 10N 10%	1
C419	J707438P26	CAP CER CL2 100N 10%	1
C420	J707438P14	CAP CER CL2 10N 10%	1

Pos	Code No	Description	Qt
C421	J707438P26	CAP CER CL2 100N 10%	1
C422	J707438P26	CAP CER CL2 100N 10%	1
C423	J707436P13	CAP CER NPO 10P 5%	1
C424	J707438P8	CAP CER CL2 3N3 10%	1
C425	J707412P13	CAP PYES 470N 10%	1
C426	J707436P93	CAP CER NPO 2N2 5%	1
C427	J707436P73	CAP CER NPO 330P 5%	1
C428	J707436P73	CAP CER NPO 330P 5%	1
C429	J707438P14	CAP CER CL2 10N 10%	1
C430	J707444P8	CAP TA SOL 22U 16V	1
C431	J707444P8	CAP TA SOL 22U 16V	1
C432	J707438P26	CAP CER CL2 100N 10%	1
C433	J707438P26	CAP CER CL2 100N 10%	1
C434	J707438P8	CAP CER CL2 3N3 10%	1
C435	J707436P1	CAP CER NPO 1P0 .25P	1
C436	J707438P26	CAP CER CL2 100N 10%	1
C501	J707412P11	CAP PYES 220N 10%	1
C502	J707412P11	CAP PYES 220N 10%	1
C503	J707412P11	CAP PYES 220N 10%	1
C504	A700235P7	CAP CER N150 3P3 .25P	1
C505	A700235P4	CAP CER N150 1P8 .25P	1
C506	A700235P12	CAP CER N150 8P2 .25P	1
C507	A700235P14	CAP CER N150 12P 5%	1
C508	A700235P32	CAP CER N150 11P 5%	1
C509	A700235P10	CAP CER N150 5P6 .25P	1
C510	A700235P16	CAP CER N150 18P 5%	1
C512	J707483P7	CAP PHEN 1P00 5%	1
C513	J707438P3	CAP CER CL2 470P 10%	1
C515	J707436P12	CAP CER NPO 8P2 .25P	1
C516	J707436P11	CAP CER NPO 6P8 .25P	1
C517	J707444P6	CAP TA SOL 4U7 35V	1
C518	J707436P3	CAP CER NPO 1P5 .25P	1
C519	J707438P3	CAP CER CL2 470P 10%	1
C520	J707436P5	CAP CER NPO 2P2 .25P	1
C521	J707436P17	CAP CER NPO 12P 5%	1
C522	J707438P3	CAP CER CL2 470P 10%	1
C523	J707436P5	CAP CER NPO 2P2 .25P	1

Pos	Code No	Description	Qt
C524	J707438P3	CAP CER CL2 470P 10%	1
C525	J707438P3	CAP CER CL2 470P 10%	1
C526	J707438P3	CAP CER CL2 470P 10%	1
C527	J707438P3	CAP CER CL2 470P 10%	1
C528	J707438P3	CAP CER CL2 470P 10%	1
C540	J707438P3	CAP CER CL2 470P 10%	1
C541	J707438P3	CAP CER CL2 470P 10%	1
C542	J707438P3	CAP CER CL2 470P 10%	1
C543	J707438P3	CAP CER CL2 470P 10%	1
C544	J707438P3	CAP CER CL2 470P 10%	1
C545	J707438P3	CAP CER CL2 470P 10%	1
C601	J707412P11	CAP PYES 220N 10%	1
C602	J707412P11	CAP PYES 220N 10%	1
C603	J707412P11	CAP PYES 220N 10%	1
C604	A700235P5	CAP CER N150 2P2 .25P	1
C605	A700235P5	CAP CER N150 2P2 .25P	1
C606	A700235P8	CAP CER N150 3P9 .25P	1
C607	A700235P10	CAP CER N150 5P6 .25P	1
C608	A700235P11	CAP CER N150 6P8 .25P	1
C609	A700235P36	CAP CER N150 7P5 .25P	1
C610	A700235P12	CAP CER N150 8P2 .25P	1
C611	J707436P7	CAP CER NPO 3P3 .25P	1
C612	J707436P9	CAP CER NPO 4P7 .25P	1
C613	J707444P6	CAP TA SOL 4U7 35V	1
C614	J707436P1	CAP CER NPO 1P0 .25P	1
C615	J707436P77	CAP CER NPO 470P 5%	1
C616	J707438P3	CAP CER CL2 470P 10%	1
C617	J707436P1	CAP CER NPO 1P0 .25P	1
C618	J707436P10	CAP CER NPO 5P6 .25P	1
C619	J707438P3	CAP CER CL2 470P 10%	1
C620	J707436P5	CAP CER NPO 2P2 .25P	1
C621	J707438P3	CAP CER CL2 470P 10%	1
C624	J707436P69	CAP CER NPO 220P 5%	1
C625	J707438P26	CAP CER CL2 100N 10%	1
C626	J707438P5	CAP CER CL2 1N 10%	1
C627	J707438P14	CAP CER CL2 10N 10%	1
C628	J707436P93	CAP CER NPO 2N2 5%	1

DATE: 9/23/1987

Pos	Code No	Description	Qt
C629	J707436P65	CAP CER NPO 150P 5%	1
C630	J707436P69	CAP CER NPO 220P 5%	1
C631	J707436P69	CAP CER NPO 220P 5%	1
C632	J707438P26	CAP CER CL2 100N 10%	1
C633	J707444P17	CAP TA SOL 47U 10V	1
C634	J707438P26	CAP CER CL2 100N 10%	1
C635	J707438P3	CAP CER CL2 470P 10%	1
C636	J707444P17	CAP TA SOL 47U 10V	1
C637	J707438P26	CAP CER CL2 100N 10%	1
C639	J707438P8	CAP CER CL2 3N3 10%	1
C640	J707412P9	CAP PYES 100N 10%	1
C641	J707412P13	CAP PYES 470N 10%	1
C642	J707412P13	CAP PYES 470N 10%	1
C643	J707438P22	CAP CER CL2 47N 10%	1
C644	J707436P6	CAP CER NPO 2P7 .25P	1
C652	J707438P5	CAP CER CL2 1N 10%	1
C653	J707444P6	CAP TA SOL 4U7 35V	1
C656	J707436P77	CAP CER NPO 470P 5%	1
C657	J707438P3	CAP CER CL2 470P 10%	1
C659	J707438P5	CAP CER CL2 1N 10%	1
C660	J707438P12	CAP CER CL2 6N8 5%	1
C665	J707438P3	CAP CER CL2 470P 10%	1
C666	J707438P3	CAP CER CL2 470P 10%	1
C667	J707438P3	CAP CER CL2 470P 10%	1
C668	J707436P61	CAP CER NPO 100P 5%	1
C701	J707436P29	CAP CER NPO 22P 5%	1
C702	J708702P22	CAP CER N750 56P 5%	1
C703	J707436P69	CAP CER NPO 220P 5%	1
C704	J707436P13	CAP CER NPO 10P 5%	1
C705	J707438P5	CAP CER CL2 1N 10%	1
C706	J707438P14	CAP CER CL2 10N 10%	1
C707	J707436P10	CAP CER NPO 5P6 .25P	1
C708	J707438P14	CAP CER CL2 10N 10%	1
C709	J707438P14	CAP CER CL2 10N 10%	1
D100	A700047P3	DIO SI SIG 1N6263	1
D101	J706892P1	DIO SI PIN UM 9401	1
D102	J706892P1	DIO SI PIN UM 9401	1

Pos	Code No	Description	Qt
D103	J707390P1	DIO SI SIG BAV 74	1
D300	J707928P2	DIO SI CAP BB 809	1
D301	J707928P2	DIO SI CAP BB 809	1
D302	J707928P2	DIO SI CAP BB 809	1
D303	J707928P2	DIO SI CAP BB 809	1
D304	J707928P2	DIO SI CAP BB 809	1
D305	J707928P2	DIO SI CAP BB 809	1
D306	J707928P2	DIO SI CAP BB 809	1
D307	J707928P2	DIO SI CAP BB 809	1
D401	A700025P8	DIO SI ZENR 6V8 5% 0.4W	1
D501	J706007P1	DIO SI CAP BB505B	1
D502	J706007P1	DIO SI CAP BB505B	1
D503	J706007P1	DIO SI CAP BB505B	1
D504	J707928P2	DIO SI CAP BB 809	1
D505	J707769P2	DIO SI CAP BBY 31	1
D601	J706007P1	DIO SI CAP BB505B	1
D602	J706007P1	DIO SI CAP BB505B	1
D603	J706007P1	DIO SI CAP BB505B	1
D604	J706007P1	DIO SI CAP BB505B	1
D605	J707389P1	DIO SI SIG BAV 99	1
D606	J708681P1	DIO SI SIG BAW 56	1
D607	J707390P1	DIO SI SIG BAV 74	1
D608	J707390P1	DIO SI SIG BAV 74	1
D610	J708681P1	DIO SI SIG BAW 56	1
D701	J707928P2	DIO SI CAP BB 809	1
D702	J707390P1	DIO SI SIG BAV 74	1
L100	A700024P1	COIL RF FIX 0.1UH 10%	1
L101	A700024P1	COIL RF FIX 0.1UH 10%	1
L102	K805653G5	COIL ASM 5 1/2T	1
L103	J707339G1	COIL FIX ASM	1
L104	A700024P1	COIL RF FIX 0.1UH 10%	1
L105	K805653G1	COIL ASM 1 1/2T	1
L106	J707256P2	COIL FIX	1
L107	J707339G1	COIL FIX ASM	1
L108	K805653G2	COIL ASM 2 1/2T G1/G2/G3	1
L108	K805653G6	COIL ASM 6 1/2T G4/G5/G6	1
L109	J707339G1	COIL FIX ASM	1

Pos	Code No	Description		Qt
L110	J707256P1	COIL FIX	G1/G2/G3	1
L110	J707256P2	COIL FIX	G4/G5/G6	1
L112	J707339G1	COIL FIX ASM		1
L113	A700024P13	COIL RF FIX 1.0UH 10%		1
L114	K805653G2	COIL ASM 2 1/2T	G1/G2/G4	1
L114	K805653G4	COIL ASM 4 1/2T	G4/G5/G6	1
L115	J709287P1	CORE TOR FERR		1
L116	J709287P1	CORE TORFERR	G1/G2/G3	1
L117	K805653G4	COIL ASM 4 1/2T	G1/G2/G3	1
L118	J707339G1	COIL FIX ASM	G1/G2/G3	1
L119	K805653G4	COIL ASM 4 1/2T	G1/G2/G3	1
L120	J707256P2	COIL FIX	G1/G2/G3	1
L120	J707256P1	COIL FIX	G4/G5/G6	1
L121	A700024P13	COIL RF FIX 1.0UH 10%		1
L122	A700024P25	COIL RF FIX 10UH 10%		1
L123	A700024P25	COIL RF FIX 10UH 10%		1
L124	K805653G5	COIL ASM 5 1/2T		1
L125	K805653G6	COIL ASM 6 1/2T		1
L126	K805653G5	COIL ASM 5 1/2T		1
L127	A700024P25	COIL RF FIX 10UH 10%		1
L128	A700024P25	COIL RF FIX 10UH 10%		1
L129	A700024P13	COIL RF FIX 1.0UH 10%		1
L130	K805653G2	COIL ASM 2 1/2T	G1/G2/G3	1
L130	K805653G1	COIL ASM 1 1/2T	G4/G5/G6	1
L131	K805653G3	COIL ASM 3 1/2T	G1/G2/G3	1
L131	K805653G2	COIL ASM 2 1/2T	G4/G5/G6	1
L301	J709099P13	COIL RF VAR 4-1/2T TAP		1
L302	J709099P13	COIL RF VAR 4-1/2T TAP		1
L303	J707486P6	COIL RF FIX 0.47UH 10%		1
L304	J709099P2	COIL RF VAR 4-1/2T TAP		1
L305	J707486P2	COIL RF FIX 3.3UH 10%		1
L306	J709099P7	COIL RF VAR 4-1/2T TAP		1
L308	J709099P6	COIL RF VAR 4-1/2T TAP		1
L310	J709099P2	COIL RF VAR 4-1/2T TAP		1
L312	J708428P2	COIL RF VAR 45 MHZ		1
L313	J709099P4	COIL RF VAR 3-1/2T TAP		1
L314	J709099P3	COIL RF VAR 3-1/2T TAP		1

Pos	Code No	Description		Qt
L401	J707486P10	COIL RF FIX 1.5UH 10%		1
L403	K805570G2	COIL ASM		1
L404	K805570G1	COIL ASM		1
L405	J708428P1	COIL RF VAR 45 MHZ		1
L406	K805570G3	COIL ASM		1
L407	A700024P25	COIL RF FIX 10UH 10%		1
L408	J708428P2	COIL RF VAR 45 MHZ		1
L409	J707431P1	COIL RF VAR 455KHZ 25%		1
L410	J707431P1	COIL RF VAR 455KHZ 25%		1
L501	A700024P13	COIL RF FIX 1.0UH 10%		1
L502	A700024P13	COIL RF FIX 1.0UH 10%		1
L503	A700024P13	COIL RF FIX 1.0UH 10%		1
L504	A700024P13	COIL RF FIX 1.0UH 10%		1
L505	L855671P1	COIL RADIO FREQUENCY		1
L506	A700024P13	COIL RF FIX 1.0UH 0%		1
L507	A700024P13	COIL RF FIX 1.0UH 0%		1
L508	A700024P4	COIL RF FIX 0.18UH 10%		1
L601	A700024P13	COIL RF FIX 1.0UH 10%		1
L602	A700024P13	COIL RF FIX 1.0UH 10%		1
L603	A700024P13	COIL RF FIX 1.0UH 10%		1
L604	A700024P13	COIL RF FIX 1.0UH 10%		1
L605	L855671P1	COIL RADIO FREQUENCY		1
L606	A700024P13	COIL RF FIX 1.0UH 10%		1
L607	A700024P13	COIL RF FIX 1.0UH 10%		1
L608	A700024P2	COIL RF FIX 0.12UH 10%		1
L609	K805653G10	COIL RF FIXED 10 1/2T		1
L701	K805570G4	COIL ASM		1
L702	A700024P43	COIL RF FIX 330UH 10%		1
L703	A700024P27	COIL RF FIX 15UH 10%		1
P102	J707064P112	CONN PWB FEM 12-CKT		1
P105	A701883P4	CONN PWB FEM RECP		1
Q100	J707388P1	TSTR NPN SI BFR 53		1
Q101	J707388P1	TSTR NPN SI BFR 53		1
Q102	A701940P1	TSTR NPN SI RF-PWR 0.4W		1
Q103	A700063P1	TSTR NPN SI RF-PWR 2.0W		1
Q104	J709163P1	TSTR NPN SI RF-PWR 10W		1
Q105	J708133P1	TSTR NPN SI RF-PWR 28W	G1/G2/G3	1

DATE: 9/23/1987

Pos	Code No	Description	Qt
Q106	J707432P1	TSTR PNP SI BCX 18	1
Q107	J707386P1	TSTR NPN SI BCW 32	1
Q108	J708406P1	TSTR NPN SI BD 233	1
Q109	J707386P1	TSTR NPN SI BCW 32	1
Q201	J707435P1	TSTR PNP SI BC 369	1
Q202	J707386P1	TSTR NPN SI BCW 32	1
Q203	J707432P1	TSTR PNP SI BCX 18	1
Q204	J707386P1	TSTR NPN SI BCW 32	1
Q301	J706011P2	TSTR NPN SI BFR 91A	1
Q302	J708315P1	TSTR JFET SI 2N5245	1
Q401	J707817P1	TSTR JFET SI J 309	1
Q402	J707817P1	TSTR JFET SI J 309	1
Q403	J707419P1	TSTR JFET SI BF511	1
Q404	J708418P1	TSTR NPN SI BFS 20	1
Q405	J708418P1	TSTR NPN SI BFS 20	1
Q406	J708418P1	TSTR NPN SI BFS 20	1
Q407	J707386P1	TSTR NPN SI BCW 32	1
Q408	J707387P1	TSTR PNP SI BCW 30	1
Q501	J707817P1	TSTR JFET SI J 309	1
Q502	J707388P1	TSTR NPN SI BFR 53	1
Q601	J707817P1	TSTR JFET SI J 309	1
Q602	J707388P1	TSTR NPN SI BFR 53	1
Q603	J708318P1	TSTR PNP SI BFT 92	1
Q604	J707433P1	TSTR MFET SI BF 989	1
Q605	J707386P1	TSTR NPN SI BCW 32	1
Q612	J707386P1	TSTR NPN SI BCW 32	1
Q613	J707386P1	TSTR NPN SI BCW 32	1
Q701	J707419P1	TSTR JFET SI BF511	1
Q702	J707387P1	TSTR PNP SI BCW 30	1
R000	J707385P332	RES MFLM 1/8W 3K3 5%	1
R100	J707385P122	RES MFLM 1/8W 1K2 5%	1
R101	J707385P472	RES MFLM 1/8W 4K7 5%	1
R102	J707385P270	RES MFLM 1/8W 27R 5%	1
R103	J707385P470	RES MFLM 1/8W 47R 5%	1
R104	J707385P102	RES MFLM 1/8W 1K0 5%	1
R105	J707385P182	RES MFLM 1/8W 1K8 5%	1
R106	J707385P470	RES MFLM 1/8W 47R 5%	1

Pos	Code No	Description	Qt
R107	J707385P680	RES MFLM 1/8W 68R 5%	1
R108	J707385P820	RES MFLM 1/8W 82R 5%	1
R109	J707385P100	RES MFLM 1/8W 10R 5%	1
R110	J707385P100	RES MFLM 1/8W 10R 5%	1
R111	J707385P100	RES MFLM 1/8W 10R 5%	1
R112	J707385P947	RES MFLM 1/8W 4R7 20%	1
R113	J707385P100	RES MFILM 1/8W 10R 5%	1
R114	J707385P947	RES MFLM 1/8W 4R7 20%	1
R115	J707385P100	RES MFLM 1/8W 10R 5% G1/G2/G3	1
R116	J707385P220	RES MFLM 1/8W 22R 5% G1/G2/G3	1
R117	J707385P220	RES MFLM 1/8W 22R 5% G1/G2/G3	1
R118	J707385P473	RES MFLM 1/8W 47K 5%	1
R119	J707385P820	RES MFLM 1/8W 82R 5%	1
R120	J707385P820	RES MFLM 1/8W 82R 5%	1
R121	J707385P333	RES MFLM 1/8W 33K 5%	1
R122	J707385P221	RES MFLM 1/8W 220R 5%	1
R123	J707385P221	RES MFLM 1/8W 220R 5%	1
R132	J708538P9	RES VAR CERM 200K 20%	1
R133	J708538P4	RES VAR CERM 5K0 20%	1
R134	J707385P100	RES MFLM 1/8W 10R 5%	1
R135	J706147P2	RES THERM PTC 80R 25%	1
R136	J707385P682	RES MFLM 1/8W 6K8 5%	1
R137	J707385P223	RES MFLM 1/8W 22K 5%	1
R138	J707385P472	RES MFLM 1/8W 4K7 5%	1
R139	J707385P472	RES MFLM 1/8W 4K7 5%	1
R140	J707385P333	RES MFLM 1/8W 33K 5%	1
R141	J707385P333	RES MFLM 1/8W 33K 5%	1
R142	J707385P104	RES MFLM 1/8W 100K 5%	1
R143	J707385P222	RES MFLM 1/8W 2K2 5%	1
R144	J707385P222	RES MFLM 1/8W 2K2 5%	1
R145	J707385P682	RES MFLM 1/8W 6K8 5%	1
R146	J707385P273	RES MFLM 1/8W 27K 5%	1
R147	J707385P104	RES MFLM 1/8W 100K 5%	1
R148	J707385P123	RES MFLM 1/8W 12K 5%	1
R149	J707385P472	RES MFLM 1/8W 4K7 5%	1
R150	J707385P391	RES MFLM 1/8W 390R 5%	1
R151	J707385P683	RES MFLM 1/8W 68K 5%	1

Pos	Code No	Description	Qt
R152	J707385P104	RES MFLM 1/8W 100K 5%	1
R153	J707385P221	RES MFLM 1/8W 220R 5%	1
R154	J707385P274	RES MFLM 1/8W 270K 5%	1
R155	J707385P222	RES MFLM 1/8W 2K2 5%	1
R156	J707385P102	RES MFLM 1/8W 1K0 5%	1
R157	J707385P392	RES MFLM 1/8W 3K9 5%	1
R201	J707385P561	RES MFLM 1/8W 560R 5%	1
R202	J707385P271	RES MFLM 1/8W 270R 5%	1
R203	J707385P153	RES MFLM 1/8W 15K 5%	1
R204	J707385P153	RES MFLM 1/8W 15K 5%	1
R205	J707385P472	RES MFLM 1/8W 4K7 5%	1
R206	J707385P272	RES MFLM 1/8W 2K7 5%	1
R207	J707385P563	RES MFLM 1/8W 56K 5%	1
R208	J707385P563	RES MFLM 1/8W 56K 5%	1
R209	J707385P271	RES MFLM 1/8W 270R 5%	1
R301	J707385P471	RES MFLM 1/8W 470R 5%	1
R302	J707385P391	RES MFLM 1/8W 390R 5%	1
R303	J707385P104	RES MFLM 1/8W 100K 5%	1
R304	J707385P104	RES MFLM 1/8W 100K 5%	1
R305	J707385P900	RES MFLM 1/8W OR JUMPER	1
R306	J707385P222	RES MFLM 1/8W 2K2 5%	1
R307	J707385P681	RES MFLM 1/8W 680R 5%	1
R308	J707385P470	RES MFLM 1/8W 47R 5%	1
R309	J707385P270	RES MFLM 1/8W 27R 5%	1
R310	J707385P104	RES MFLM 1/8W 100K 5%	1
R311	J707385P560	RES MFLM 1/8W 56R 5%	1
R312	J707385P104	RES MFLM 1/8W 100K 5%	1
R314	J707385P104	RES MFLM 1/8W 100K 5%	1
R316	J707385P104	RES MFLM 1/8W 100K 5%	1
R317	J707385P182	RES MFLM 1/8W 1K8 5%	1
R318	J707385P100	RES MFLM 1/8W 10R 5%	1
R319	J707385P101	RES MFLM 1/8W 100R 5%	1
R321	J707385P270	RES MFLM 1/8W 27R 5%	1
R322	J707385P391	RES MFLM 1/8W 390R 5%	1
R323	J707385P104	RES MFLM 1/8W 100K 5%	1
R324	J707385P104	RES MFLM 1/8W 100K 5%	1
R325	J707385P100	RES MFLM 1/8W 10R 5%	1

Pos	Code No	Description	Qt
R326	J707385P392	RES MFLM 1/8W 3K9 5%	1
R327	J707385P102	RES MFLM 1/8W 1K0 5%	1
R401	J707385P560	RES MFLM 1/8W 56R 5%	1
R402	J707385P100	RES MFLM 1/8W 10R 5%	1
R403	J707385P332	RES MFLM 1/8W 3K3 5%	1
R405	J707385P100	RES MFLM 1/8W 10R 5%	1
R406	J707385P820	RES MFLM 1/8W 82R 5%	1
R407	J707385P470	RES MFLM 1/8W 47R 5%	1
R408	J707385P470	RES MFLM 1/8W 47R 5%	1
R410	J707385P272	RES MFLM 1/8W 2K7 5%	1
R411	J707385P682	RES MFLM 1/8W 6K8 5%	1
R412	J707385P272	RES MFLM 1/8W 2K7 5%	1
R413	J707385P821	RES MFLM 1/8W 820R 5%	1
R414	J707385P220	RES MFLM 1/8W 22R 5%	1
R415	J707385P222	RES MFLM 1/8W 2K2 5%	1
R416	J707385P562	RES MFLM 1/8W 5K6 5%	1
R417	J707385P103	RES MFLM 1/8W 10K 5%	1
R418	J707385P153	RES MFLM 1/8W 15K 5%	1
R419	J707385P182	RES MFLM 1/8W 1K8 5%	1
R420	J707385P182	RES MFLM 1/8W 1K8 5%	1
R421	J707385P182	RES MFLM 1/8W 1K8 5%	1
R422	J707385P473	RES MFLM 1/8W 47K 5%	1
R423	J707385P153	RES MFLM 1/8W 15K 5%	1
R424	J708538P5	RES VAR CERM 10K 20%	1
R425	J707385P272	RES MFLM 1/8W 2K7 5%	1
R426	J707385P563	RES MFLM 1/8W 56K 5%	1
R427	J707385P273	RES MFLM 1/8W 27K 5%	1
R428	J707385P683	RES MFLM 1/8W 68K 5%	1
R429	J707385P104	RES MFLM 1/8W 100K 5%	1
R430	J707385P334	RES MFLM 1/8W 330K 5%	1
R431	J707385P473	RES MFLM 1/8W 47K 5%	1
R432	J707385P473	RES MFLM 1/8W 47K 5%	1
R433	J707385P271	RES MFLM 1/8W 270R 5%	1
R434	J707385P102	RES MFLM 1/8W 1K0 5%	1
R435	J706147P3	RES THERM PTC 250R 25%	1
R436	J707385P392	RES MFLM 1/8W 3K9 5%	1
R437	J707406P7	RES THERM NTC 220R 10%	1

DATE: 9/23/1987

Pos	Code No	Description	Qt
R438	J707385P222	RES MFLM 1/8W 2K2 5%	1
R439	J707385P392	RES MFLM 1/8W 3K9 5%	1
R440	J707385P392	RES MFLM 1/8W 3K9 5%	1
R441	J707385P101	RES MFLM 1/8W 100R 5%	1
R442	J708538P6	RES VAR CERM 20K 20%	1
R444	J707385P473	RES MFLM 1/8W 47K 5%	1
R445	J707385P273	RES MFLM 1/8W 27K 5%	1
R446	J707385P224	RES MFLM 1/8W 220K 5%	1
R447	J707385P392	RES MFLM 1/8W 3K9 5%	1
R448	J707385P101	RES MFLM 1/8W 100R 5%	1
R449	J707385P470	RES MFLM 1/8W 47R 5%	1
R450	J707385P103	RES MFLM 1/8W 10K 5%	1
R451	J707385P332	RES MFLM 1/8W 3K3 5%	1
R501	J707385P122	RES MFLM 1/8W 1K2 5%	1
R502	J707385P122	RES MFLM 1/8W 1K2 5%	1
R503	J707385P122	RES MFLM 1/8W 1K2 5%	1
R504	J707385P104	RES MFLM 1/8W 100K 5%	1
R505	J707385P104	RES MFLM 1/8W 100K 5%	1
R506	J707385P104	RES MFLM 1/8W 100K 5%	1
R508	J707385P103	RES MFLM 1/8W 10K 5%	1
R509	J707385P910	RES MFLM 1/8W 1R0 20%	1
R510	J707385P332	RES MFLM 1/8W 3K3 5%	1
R512	J707385P561	RES MFLM 1/8W 560R 5%	1
R513	J707385P183	RES MFLM 1/8W 18K 5%	1
R514	J707385P472	RES MFLM 1/8W 4K7 5%	1
R515	J707385P470	RES MFLM 1/8W 47R 5%	1
R517	J707385P101	RES MFLM 1/8W 100R 5%	1
R518	J707385P470	RES MFLM 1/8W 47R 5%	1
R519	J707385P221	RES MFLM 1/8W 220R 5%	1
R529	J707385P392	RES MFLM 1/8W 3K9 5%	1
R601	J707385P122	RES MFLM 1/8W 1K2 5%	1
R602	J707385P122	RES MFLM 1/8W 1K2 5%	1
R603	J707385P122	RES MFLM 1/8W 1K2 5%	1
R604	J707385P104	RES MFLM 1/8W 100K 5%	1
R605	J707385P104	RES MFLM 1/8W 100K 5%	1
R606	J707385P104	RES MFLM 1/8W 100K 5%	1
R607	J707385P561	RES MFLM 1/8W 560R 5%	1

Pos	Code No	Description	Qt
R608	J707385P221	RES MFLM 1/8W 220R 5%	1
R609	J707385P472	RES MFLM 1/8W 4K7 5%	1
R610	J707385P183	RES MFLM 1/8W 18K 5%	1
R611	J707385P271	RES MFLM 1/8W 270R 5%	1
R612	J707385P222	RES MFLM 1/8W 2K2 5%	1
R613	J707385P101	RES MFLM 1/8W 100R 5%	1
R614	J707385P561	RES MFLM 1/8W 560R 5%	1
R615	J707385P272	RES MFLM 1/8W 2K7 5%	1
R616	J707385P470	RES MFLM 1/8W 47R 5%	1
R617	J707385P683	RES MFLM 1/8W 68K 5%	1
R618	J707385P683	RES MFLM 1/8W 68K 5%	1
R619	J707385P104	RES MFLM 1/8W 100K 5%	1
R620	J707385P271	RES MFLM 1/8W 270R 5%	1
R621	J707385P561	RES MFLM 1/8W 560R 5%	1
R622	J707385P102	RES MFLM 1/8W 1K0 5%	1
R623	J707385P224	RES MFLM 1/8W 220K 5%	1
R624	J707385P223	RES MFLM 1/8W 22K 5%	1
R625	J707385P470	RES MFLM 1/8W 47R 5%	1
R626	J707385P100	RES MFLM 1/8W 10R 5%	1
R627	J707385P103	RES MFLM 1/8W 10K 5%	1
R628	J707385P224	RES MFLM 1/8W 220K 5%	1
R629	J707385P393	RES MFLM 1/8W 39K 5%	1
R630	J707385P100	RES MFLM 1/8W 10R 5%	1
R631	J707385P824	RES MFLM 1/8W 820K 5%	1
R632	J707385P223	RES MFLM 1/8W 22K 5%	1
R633	J707385P824	RES MFLM 1/8W 820K 5%	1
R634	J707385P123	RES MFLM 1/8W 12K 5%	1
R635	J707385P102	RES MFLM 1/8W 1K0 5%	1
R636	J707385P332	RES MFLM 1/8W 3K3 5%	1
R637	J707385P181	RES MFLM 1/8W 180R 5%	1
R638	J707385P154	RES MFLM 1/8W 150K 5%	1
R639	J707385P682	RES MFLM 1/8W 6K8 5%	1
R640	J707385P105	RES MFLM 1/8W 1M0 10%	1
R641	J707385P184	RES MFLM 1/8W 180K 5%	1
R642	J707385P184	RES MFLM 1/8W 180K 5%	1
R643	J707385P105	RES MFLM 1/8W 1M0 10%	1
R644	J707385P333	RES MFLM 1/8W 33K 5%	1

Pos	Code No	Description	Qt
R645	J707385P103	RES MFLM 1/8W 10K 5%	1
R646	J707385P682	RES MFLM 1/8W 6K8 5%	1
R647	J707385P333	RES MFLM 1/8W 33K 5%	1
R648	J707385P823	RES MFLM 1/8W 82K 5%	1
R649	J707385P393	RES MFLM 1/8W 39K 5%	1
R650	J707385P393	RES MFLM 1/8W 39K 5%	1
R651	J707385P333	RES MFLM 1/8W 33K 5%	1
R652	J707385P472	RES MFLM 1/8W 4K7 5%	1
R653	J707385P333	RES MFLM 1/8W 33K 5%	1
R654	J707385P562	RES MFLM 1/8W 5K6 5%	1
R655	J707385P183	RES MFLM 1/8W 18K 5%	1
R656	J707385P393	RES MFLM 1/8W 39K 5%	1
R657	J707385P823	RES MFLM 1/8W 82K 5%	1
R658	J707385P154	RES MFLM 1/8W 150K 5%	1
R659	J707385P103	RES MFLM 1/8W 10K 5%	1
R660	J707385P333	RES MFLM 1/8W 33K 5%	1
R661	J707385P393	RES MFLM 1/8W 39K 5%	1
R662	J707385P473	RES MFLM 1/8W 47K 5%	1
R663	J708538P6	RES VAR CERM 20K20%	1
R664	J707385P563	RES MFLM 1/8W 56K 5%	1
R665	J707385P224	RES MFLM 1/8W 220K 5%	1
R666	J707385P124	RES MFLM 1/8W 120K 5%	1
R667	J707385P124	RES MFLM 1/8W 120K 5%	1
R668	J707385P122	RES MFLM 1/8W 1K2 5%	1
R669	J707385P221	RES MFLM 1/8W 220R 5%	1
R670	J707385P103	RES MFLM 1/8W 10K 5%	1
R671	J707385P562	RES MFLM 1/8W 5K6 5%	1
R672	J707385P822	RES MFLM 1/8W 8K2 5%	1
R673	J707385P822	RES MFLM 1/8W 8K2 5%	1
R674	J707385P101	RES MFLM 1/8W 100R 5%	1
R675	J708538P5	RES VAR CERM 10K 20%	1
R676	J707385P102	RES MFLM 1/8W 1K0 5%	1
R677	J708538P5	RES VAR CERM 10K 20%	1
R678	J707385P470	RES MFLM 1/8W 47R 5%	1
R679	J707385P821	RES MFLM 1/8W 820R 5%	1
R680	J708538P6	RES VAR CERM 20K 20%	1
R681	J707385P223	RES MFLM 1/8W 22K 5%	1

Pos	Code No	Description		Qt
R682	J707385P223	RES MFLM 1/8W 22K 5%		1
R683	J707385P223	RES MFLM 1/8W 22K 5%		1
R684	J707385P183	RES MFLM 1/8W 18K 5%		1
R685	J707385P183	RES MFLM 1/8W 18K 5%		1
R686	J707385P103	RES MFLM 1/8W 10K 5%		1
R687	J707385P103	RES MFLM 1/8W 10K 5%		1
R689	J707385P105	RES MFLM 1/8W 1MO 10%		1
R690	J707385P124	RES MFLM 1/8W 120K 5%		1
R691	J707385P273	RES MFLM 1/8W 27K 5%		1
R692	J707385P223	RES MFLM 1/8W 22K 5%		1
R693	J707385P105	RES MFLM 1/8W 1MO 10%		1
R694	J707385P223	RES MFLM 1/8W 22K 5%		1
R695	J707385P105	RES MFLM 1/8W 1MO 10%		1
R696	J707385P223	RES MFLM 1/8W 22K 5%		1
R697	J707385P105	RES MFLM 1/8W 1MO 10%		1
R698	J707385P103	RES MFLM 1/8W 10K 5%		1
R701	J708666P1	RES THERM NTC 5K 2%		1
R702	A701250P413	RES MFILM 133K 1% 1/4W		1
R703	A701250P213	RES MFILM 1K33 1% 1/4W		1
R704	A701250P325	RES MFILM 17K8 1% 1/4W		1
R705	J708666P2	RES THERM NTC 20K 2%		1
R706	J708666P2	RES THERM NTC 20K 2%		1
R707	J707385P104	RES MFLM 1/8W 100K 5%		1
R708	J707385P105	RES MFLM 1/8W 1MO 10%		1
R709	J707385P181	RES MFLM 1/8W 180R 5%		1
R710	J707385P101	RES MFLM 1/8W 100R 5%		1
R711	J707385P223	RES MFLM 1/8W 22K 5%		1
R712	J707385P154	RES MFLM 1/8W 150K 5%		1
R713	J707385P821	RES MFLM 1/8W 820R 5%		1
R714	J707385P104	RES MFLM 1/8W 100K 5%		1
U100	J708165P2	IC LIN OP-AMP 324		1
U201	J708333P1	IC LIN VR FIX 4785		1
U401	J707449P1	IC LIN IF-AMP 3357		1
U402	M905766G1	INT CKT SQ 4002	G1/G2/G4/G5	1
U402	M905766G2	INT CKT SQ 4003	G3/G6	1
U601	J707859P1	IC LIN OP-AMP 204		1
U602	J707859P1	IC LIN OP-AMP 204		1

DATE: 9/23/1987

Pos	Code No	Description	Qt
U603	J707859P1	IC LIN OP-AMP 204	1
U604	J707859P1	IC LIN OP-AMP 204	1
U606	J707243P1	IC DIG REG 4094	1
U607	J707374P3	IC PLL PRESC 12017	1
U608	B800902P1	IC PLL SYNCUSTOM DES	1
U609	J707859P1	IC LIN OP-AMP 204	1
U610	J708503P2	IC LIN CMPAR LM 339	1
U615	J708621P2	CPLR OPTO PC 827	1
U616	J708503P2	IC LIN CMPAR LM 339	1
W001	A700184P1	RES WIRE JMPR OR JUMPER	1
W003	J707256P1	COIL FIX	1
W004	J707256P1	COIL FIX	1
W005	J708717P1	STRAP	1
W006	J709241P1	STRAP	1
W007	J709241P1	STRAP	1
Y401	J708426P1	CRYSTAL UNIT 44.5450MHZ	1
Y701	J707367P18	CRYSTAL UNIT 7.3750MHZ	1
Z401	J708330P1	FLTR CRY 45.0 +/-7.5KHZ G1/G4	1
Z401	J708330P2	FLTR CRY 45.0 +/-6KHZ G2/G5	1
Z401	J708330P3	FLTR CRY 45.0 +/-3.75KHZ G3/G6	1
Z402	J707446P1	FLTR CER 455K +/-10KHZ G1/G4	1
Z402	J707446P3	FLTR CER 455K +/-7.5KHZ G2/G5	1
Z402	J707446P4	FLTR CER 455K +/-4.5KHZ G3/G6	1
Z403	J707446P1	FLTR CER 455K +/-10KHZ G1/G4	1
Z403	J707446P3	FLTR CER 455K +/-7.5KHZ G2/G5	1
Z403	J707446P4	FLTR CER 455K +/-4.5KHZ G3/G6	1
	M905762P1R0	BD PW G1/G2/G3	1
	M905762P2R0	BD PW G4/G5/G6	1
		NON ELECTRONICAL PARTS	
	J708966G1	HEAT SINK MODF	1
	K805569G2	SHIELD METALLIZED	1
	J706281P6	CORE SCREW FERR U10	8
	J707256P4	COIL FIX	1
	J707256P4	COIL FIX	1
	J707256P4	COIL FIX	1

Pos	Code No	Description	Qt

DATE: 3/11/1987

Pos	Code No	Description	Qt
C000	J707438P8	CAP CER CL2 3N3 10%	1
C001	J707809P5	CAP CER NPO 2P2.25P G1/G2/G3	1
C100	J707809P10	CAP CER NPO 5P6 .25P	1
C101	J707438P4	CAP CER CL2 680P 10%	1
C102	J707809P8	CAP CER NPO 3P9 .25P	1
C103	J707809P27	CAP CER NPO 150P 5%	1
C104	J707809P19	CAP CER NPO 33P 5%	1
C105	J707809P13	CAP CER NPO 10P 5%	1
C106	J707438P14	CAP CER CL2 10N 10%	1
C107	J707809P25	CAP CER NPO 100P 5%	1
C108	J707809P22	CAP CER NPO 56P 5%	1
C109	J707809P17	CAP CER NPO 22P 5%	1
C110	J707438P14	CAP CER CL2 10N 10%	1
C111	J707809P25	CAP CER NPO 100P 5%	1
C112	J707438P4	CAP CER CL2 680P 10%	1
C113	J707809P21	CAP CER NPO 47P 5%	1
C114	J707809P25	CAP CER NPO 100P 5%	1
C115	J707809P24	CAP CER NPO 82P 5%	1
C116	J707438P14	CAP CER CL2 10N 10%	1
C117	J707809P26	CAP CER NPO 120P 5%	1
C118	J707438P14	CAP CER CL2 10N 10%	1
C119	J707438P4	CAP CER CL2 680P 10%	1
C120	J707809P23	CAP CER NPO 68P 5%	1
C121	J707809P23	CAP CER NPO 68P 5%	1
C122	A700006P34	CAP MICA 100P 5% G1/G2/G3	1
C122	A700006P38	CAP MICA 150P 5% G4/G5/G6	1
C123	J707438P14	CAP CER CL2 10N 10%	1
C124	J707809P26	CAP CER NPO 120P 5%	1
C125	J707438P4	CAP CER CL2 680P 10%	1
C126	J707438P14	CAP CER CL2 10N 10%	1
C127	J707353P6	CAP ELECT 4U7 25V	1
C128	J707809P27	CAP CER NPO 150P 5%	1
C129	J707809P27	CAP CER NPO 150P 5%	1
C130	A700006P32	CAP MICA 82P 5% G1/G2/G3	1
C130	A700006P30	CAP MICA 68P 5% G4/G5/G6	1
C131	A700006P41	CAP MICA 180P 5% G1/G2/G3	1
C131	A700006P38	CAP MICA 150P 5% G4/G5/G6	1

Pos	Code No	Description	Qt
C132	A700006P41	CAP MICA 180P 5% G1/G2/G3	1
C133	J707438P26	CAP CER CL2 100N 10% G1/G2/G3	1
C134	J707809P26	CAP CER NPO 120P 5% G1/G2/G4	1
C135	J707438P4	CAP CER CL2 680P 10%	1
C136	A700006P26	CAP MICA 47P 5% G1/G2/G3	1
C137	A700006P34	CAP MICA 100P 5% G1/G2/G3	1
C138	J707809P27	CAP CER NPO 150P 5%	1
C139	J707809P27	CAP CER NPO 150P 5%	1
C140	J707809P27	CAP CER NPO 150P 5%	1
C141	J707809P27	CAP CER NPO 150P 5%	1
C142	A700006P6	CAP MICA 10P 5%	1
C143	A700006P22	CAP MICA 36P 5%	1
C144	A700006P22	CAP MICA 36P 5%	1
C145	A700006P11	CAP MICA 15P 5%	1
C146	J707438P4	CAP CER CL2 680P 10%	1
C147	J707438P4	CAP CER CL2 680P 10%	1
C148	J707438P4	CAP CER CL2 680P 10%	1
C149	J707438P4	CAP CER CL2 680P 10%	1
C150	J707809P1	CAP CER NPO 1P0 .25P	1
C151	J707809P1	CAP CER NPO 1P0 .25P	1
C152	J707438P4	CAP CER CL2 680P 10%	1
C153	J707438P4	CAP CER CL2 680P 10%	1
C154	J707438P4	CAP CER CL2 680P 10%	1
C155	J707438P4	CAP CER CL2 680P 10%	1
C156	J707353P3	CAP ELECT 0U47 50V	1
C157	J707438P4	CAP CER CL2 680P 10%	1
C158	J707438P4	CAP CER CL2 680P 10%	1
C159	J707438P14	CAP CER CL2 10N 10%	1
C160	J707438P4	CAP CER CL2 680P 10%	1
C161	J707438P14	CAP CER CL2 10N 10%	1
C162	J707438P14	CAP CER CL2 10N 10%	1
C163	J707438P26	CAP CER CL2 100N 10%	1
C164	J707438P4	CAP CER CL2 680P 10%	1
C165	J707438P4	CAP CER CL2 680P 10%	1
C166	J707438P4	CAP CER CL2 680P 10%	1
C167	A701413P34	CAP MICA 100P 5%	1
C168	A700006P28	CAP MICA 56P 5% G1/G2/G3	1

DATE: 3/11/1987

Pos	Code No	Description		Qt
C168	A700006P32	CAP MICA 82P 5%	G4/G5/G6	1
C169	A700006P9	CAP MICA 13P 5%	G1/G2/G3	1
C169	A700006P22	CAP MICA 36P 5%	G4/G5/G6	1
C170	J707809P8	CAP CER NPO 3P9.25P	G1/G2/G3	1
C170	J707809P13	CAP CER NPO 10P.25P	G4	1
C170	A700006P22	CAP MICA 36P 5%	G5/G6	1
C201	J707438P26	CAP CER CL2 100N 10%		1
C202	J707444P8	CAP TA SOL 22U 16V		1
C203	J707444P6	CAP TA SOL 4U7 35V		1
C204	J707436P77	CAP CER NPO 470P 5%		1
C205	J707412P9	CAP PYES 100N 10%		1
C301	J707436P3	CAP CER NPO 1P5 .25P		1
C302	J707438P5	CAP CER CL2 1N 10%		1
C304	J707436P8	CAP CER NPO 3P9 .25P		1
C305	J707436P21	CAP CER NPO 15P 5%		1
C306	J707483P1	CAP PHEN 0P47 5%		1
C307	J707438P5	CAP CER CL2 1N 10%	G1/G2/G3	1
C307	J707438P4	CAP CER CL2 680P 10%	G4/G5/G6	1
C309	J707436P21	CAP CER NPO 15P 5%		1
C310	J707438P5	CAP CER CL2 1N 10%		1
C311	J707438P5	CAP CER CL2 1N 10%		1
C312	J707436P87	CAP CER NPO 1N2 5%		1
C314	J707436P5	CAP CER NPO 2P2 .25P		1
C315	J707438P5	CAP CER CL2 1N 10%		1
C316	J707436P5	CAP CER NPO 2P2 .25P		1
C317	J707444P2	CAP TA SOL 0U22 35V		1
C318	J707438P5	CAP CER CL2 1N 10%		1
C319	J707436P21	CAP CER NPO 15P 5%		1
C320	J707438P5	CAP CER CL2 1N 10%		1
C322	J707483P7	CAP PHEN 1P00 5%		1
C323	J707483P5	CAP PHEN 0P68 5%		1
C324	J707483P4	CAP PHEN 0P56 5%		1
C325	J707438P5	CAP CER CL2 1N 10%		1
C326	J707436P21	CAP CER NPO 15P 5%		1
C328	J707436P21	CAP CER NPO 15P 5%		1
C331	J707436P21	CAP CER NPO 15P 5%		1
C332	J707436P21	CAP CER NPO 15P 5%		1

Pos	Code No	Description	Qt
C333	J707483P13	CAP PHEN 0P22 10%	1
C335	J707438P5	CAP CER CL2 1N 10%	1
C338	J707436P11	CAP CER NPO 6P8 .25P	1
C339	J707438P5	CAP CER CL2 1N 10%	1
C340	J707438P8	CAP CER CL2 3N3 10%	1
C345	J707436P37	CAP CER NPO 33P 5%	1
C347	J707438P5	CAP CER CL2 1N 10%	1
C348	J707438P5	CAP CER CL2 1N 10%	1
C350	J707436P3	CAP CER NPO 1P5 .25P	1
C351	J707436P13	CAP CER NPO 10P 5%	1
C353	J707483P2	CAP PHEN 0P33 5%	1
C354	J707436P13	CAP CER NPO 10P 5%	1
C355	J707483P8	CAP PHEN 1P20 5%	1
C356	J707438P5	CAP CER CL2 1N 10%	1
C357	J707436P1	CAP CER NPO 1P0 .25P	1
C358	J707436P1	CAP CER NPO 1P0 .25P	1
C359	J707436P1	CAP CER NPO 1P0 .25P	1
C401	J707438P8	CAP CER CL2 3N3 10%	1
C402	J707438P8	CAP CER CL2 3N3 10%	1
C403	J707438P8	CAP CER CL2 3N3 10%	1
C404	J707436P9	CAP CER NPO 4P7 .25P	1
C405	J707438P26	CAP CER CL2 100N 10%	1
C406	J707436P10	CAP CER NPO 5P6 .25P	1
C407	J707436P9	CAP CER NPO 4P7 .25P	1
C408	J707438P5	CAP CER CL2 1N 10%	1
C409	J707438P8	CAP CER CL2 3N3 10%	1
C410	J707444P8	CAP TA SOL 22U 16V	1
C411	J707438P26	CAP CER CL2 100N 10%	1
C412	J707438P26	CAP CER CL2 100N 10%	1
C413	J707436P21	CAP CER NPO 15P 5%	1
C414	J707438P8	CAP CER CL2 3N3 10%	1
C415	J707438P8	CAP CER CL2 3N3 10%	1
C416	J708702P16	CAP CER N750 18P 5%	1
C417	J707436P49	CAP CER NPO 56P 5%	1
C418	J707438P14	CAP CER CL2 10N 10%	1
C419	J707438P26	CAP CER CL2 100N 10%	1
C420	J707438P14	CAP CER CL2 10N 10%	1

DATE: 3/11/1987

Pos	Code No	Description	Qt
C421	J707438P26	CAP CER CL2 100N 10%	1
C422	J707438P26	CAP CER CL2 100N 10%	1
C423	J707436P13	CAP CER NPO 10P 5%	1
C424	J707438P8	CAP CER CL2 3N3 10%	1
C425	J707412P13	CAP PYES 470N 10%	1
C426	J707436P93	CAP CER NPO 2N2 5%	1
C427	J707436P73	CAP CER NPO 330P 5%	1
C428	J707436P73	CAP CER NPO 330P 5%	1
C429	J707438P14	CAP CER CL2 10N 10%	1
C430	J707444P8	CAP TA SOL 22U 16V	1
C431	J707444P8	CAP TA SOL 22U 16V	1
C432	J707438P26	CAP CER CL2 100N 10%	1
C433	J707438P26	CAP CER CL2 100N 10%	1
C434	J707438P8	CAP CER CL2 3N3 10%	1
C435	J707436P1	CAP CER NPO 1P0 .25P	1
C436	J707438P26	CAP CER CL2 100N 10%	1
C501	J707412P11	CAP PYES 220N 10%	1
C502	J707412P11	CAP PYES 220N 10%	1
C503	J707412P11	CAP PYES 220N 10%	1
C504	A700235P7	CAP CER N150 3P3 .25P	1
C505	A700235P4	CAP CER N150 1P8 .25P	1
C506	A700235P12	CAP CER N150 8P2 .25P	1
C507	A700235P14	CAP CER N150 12P 5%	1
C508	A700235P32	CAP CER N150 11P 5%	1
C509	A700235P10	CAP CER N150 5P6 .25P	1
C510	A700235P16	CAP CER N150 18P 5%	1
C512	J707483P7	CAP PHEN 1P00 5%	1
C513	J707438P3	CAP CER CL2 470P 10%	1
C515	J707436P12	CAP CER NPO 8P2 .25P	1
C516	J707436P11	CAP CER NPO 6P8 .25P	1
C517	J707444P6	CAP TA SOL 4U7 35V	1
C518	J707436P3	CAP CER NPO 1P5 .25P	1
C519	J707438P3	CAP CER CL2 470P 10%	1
C520	J707436P5	CAP CER NPO 2P2 .25P	1
C521	J707436P17	CAP CER NPO 12P 5%	1
C522	J707438P3	CAP CER CL2 470P 10%	1
C523	J707436P5	CAP CER NPO 2P2 .25P	1

Pos	Code No	Description	Qt
C524	J707438P3	CAP CER CL2 470P 10%	1
C525	J707438P3	CAP CER CL2 470P 10%	1
C526	J707438P3	CAP CER CL2 470P 10%	1
C527	J707438P3	CAP CER CL2 470P 10%	1
C528	J707438P3	CAP CER CL2 470P 10%	1
C540	J707438P3	CAP CER CL2 470P 10%	1
C541	J707438P3	CAP CER CL2 470P 10%	1
C542	J707438P3	CAP CER CL2 470P 10%	1
C543	J707438P3	CAP CER CL2 470P 10%	1
C544	J707438P3	CAP CER CL2 470P 10%	1
C545	J707438P3	CAP CER CL2 470P 10%	1
C601	J707412P11	CAP PYES 220N 10%	1
C602	J707412P11	CAP PYES 220N 10%	1
C603	J707412P11	CAP PYES 220N 10%	1
C604	A700235P5	CAP CER N150 2P2 .25P	1
C605	A700235P5	CAP CER N150 2P2 .25P	1
C606	A700235P8	CAP CER N150 3P9 .25P	1
C607	A700235P10	CAP CER N150 5P6 .25P	1
C608	A700235P11	CAP CER N150 6P8 .25P	1
C609	A700235P36	CAP CER N150 7P5 .25P	1
C610	A700235P12	CAP CER N150 8P2 .25P	1
C611	J707436P7	CAP CER NPO 3P3 .25P	1
C612	J707436P9	CAP CER NPO 4P7 .25P	1
C613	J707444P6	CAP TA SOL 4U7 35V	1
C614	J707436P1	CAP CER NPO 1P0 .25P	1
C615	J707436P77	CAP CER NPO 470P 5%	1
C616	J707438P3	CAP CER CL2 470P 10%	1
C617	J707436P1	CAP CER NPO 1P0 .25P	1
C618	J707436P10	CAP CER NPO 5P6 .25P	1
C619	J707438P3	CAP CER CL2 470P 10%	1
C620	J707436P5	CAP CER NPO 2P2 .25P	1
C621	J707438P3	CAP CER CL2 470P 10%	1
C624	J707436P69	CAP CER NPO 220P 5%	1
C625	J707438P26	CAP CER CL2 100N 10%	1
C626	J707438P5	CAP CER CL2 1N 10%	1
C627	J707438P14	CAP CER CL2 10N 10%	1
C628	J707436P93	CAP CER NPO 2N2 5%	1

DATE: 3/11/1987

Pos	Code No	Description	Qt
C629	J707436P65	CAP CER NPO 150P 5%	1
C630	J707436P69	CAP CER NPO 220P 5%	1
C631	J707436P69	CAP CER NPO 220P 5%	1
C632	J707438P26	CAP CER CL2 100N 10%	1
C633	J707444P17	CAP TA SOL 47U 10V	1
C634	J707438P26	CAP CER CL2 100N 10%	1
C635	J707438P3	CAP CER CL2 470P 10%	1
C636	J707444P17	CAP TA SOL 47U 10V	1
C637	J707438P26	CAP CER CL2 100N 10%	1
C639	J707438P8	CAP CER CL2 3N3 10%	1
C640	J707412P9	CAP PYES 100N 10%	1
C641	J707412P13	CAP PYES 470N 10%	1
C642	J707412P13	CAP PYES 470N 10%	1
C643	J707438P22	CAP CER CL2 47N 10%	1
C644	J707436P6	CAP CER NPO 2P7 .25P	1
C652	J707438P5	CAP CER CL2 1N 10%	1
C653	J707444P6	CAP TA SOL 4U7 35V	1
C656	J707436P77	CAP CER NPO 470P 5%	1
C657	J707438P3	CAP CER CL2 470P 10%	1
C659	J707438P5	CAP CER CL2 1N 10%	1
C660	J707438P12	CAP CER CL2 6N8 5%	1
C665	J707438P3	CAP CER CL2 470P 10%	1
C666	J707438P3	CAP CER CL2 470P 10%	1
C667	J707438P3	CAP CER CL2 470P 10%	1
C668	J707436P61	CAP CER NPO 100P 5%	1
C701	J707436P29	CAP CER NPO 22P 5%	1
C702	J708702P22	CAP CER N750 56P 5%	1
C703	J707436P69	CAP CER NPO 220P 5%	1
C704	J707436P13	CAP CER NPO 10P 5%	1
C705	J707438P5	CAP CER CL2 1N 10%	1
C706	J707438P14	CAP CER CL2 10N 10%	1
C707	J707436P10	CAP CER NPO 5P6 .25P	1
C708	J707438P14	CAP CER CL2 10N 10%	1
C709	J707438P14	CAP CER CL2 10N 10%	1
D100	A700047P3	DIO SI SIG 1N6263	1
D101	J706892P1	DIO SI PIN UM 9401	1
D102	J706892P1	DIO SI PIN UM 9401	1

Pos	Code No	Description	Qt
D103	J707390P1	DIO SI SIG BAV 74	1
D300	J707928P2	DIO SI CAP BB 809	1
D301	J707928P2	DIO SI CAP BB 809	1
D302	J707928P2	DIO SI CAP BB 809	1
D303	J707928P2	DIO SI CAP BB 809	1
D304	J707928P2	DIO SI CAP BB 809	1
D305	J707928P2	DIO SI CAP BB 809	1
D306	J707928P2	DIO SI CAP BB 809	1
D307	J707928P2	DIO SI CAP BB 809	1
D401	A700025P8	DIO SI ZENR 6V8 5% 0.4W	1
D501	J706007P1	DIO SI CAP BB505B	1
D502	J706007P1	DIO SI CAP BB505B	1
D503	J706007P1	DIO SI CAP BB505B	1
D504	J707928P2	DIO SI CAP BB 809	1
D505	J707769P2	DIO SI CAP BBY 31	1
D601	J706007P1	DIO SI CAP BB505B	1
D602	J706007P1	DIO SI CAP BB505B	1
D603	J706007P1	DIO SI CAP BB505B	1
D604	J706007P1	DIO SI CAP BB505B	1
D605	J707389P1	DIO SI SIG BAV 99	1
D606	J708681P1	DIO SI SIG BAW 56	1
D607	J707390P1	DIO SI SIG BAV 74	1
D608	J707390P1	DIO SI SIG BAV 74	1
D610	J708681P1	DIO SI SIG BAW 56	1
D701	J707928P2	DIO SI CAP BB 809	1
D702	J707390P1	DIO SI SIG BAV 74	1
L100	A700024P1	COIL RF FIX 0.1UH 10%	1
L101	A700024P1	COIL RF FIX 0.1UH 10%	1
L102	K805653G5	COIL ASM 5 1/2T	1
L103	J707339G1	COIL FIX ASM	1
L104	A700024P1	COIL RF FIX 0.1UH 10%	1
L105	K805653G1	COIL ASM 1 1/2T	1
L106	J707256P2	COIL FIX	1
L107	J707339G1	COIL FIX ASM	1
L108	K805653G2	COIL ASM 2 1/2T G1/G2/G3	1
L108	K805653G6	COIL ASM 6 1/2T G4/G5/G6	1
L109	J707339G1	COIL FIX ASM	1

DATE: 3/11/1987

Pos	Code No	Description		Qt
L110	J707256P1	COIL FIX	G1/G2/G3	1
L110	J707256P2	COIL FIX	G4/G5/G6	1
L112	J707339G1	COIL FIX ASM		1
L113	A700024P13	COIL RF FIX 1.0UH 10%		1
L114	K805653G2	COIL ASM 2 1/2T	G1/G2/G4	1
L114	K805653G4	COIL ASM 4 1/2T	G4/G5/G6	1
L115	J709287P1	CORE TOR FERR		1
L116	J709287P1	CORE TORFERR	G1/G2/G3	1
L117	K805653G4	COIL ASM 4 1/2T	G1/G2/G3	1
L118	J707339G1	COIL FIX ASM	G1/G2/G3	1
L119	K805653G4	COIL ASM 4 1/2T	G1/G2/G3	1
L120	J707256P2	COIL FIX	G1/G2/G3	1
L120	J707256P1	COIL FIX	G4/G5/G6	1
L121	A700024P13	COIL RF FIX 1.0UH 10%		1
L122	A700024P25	COIL RF FIX 10UH 10%		1
L123	A700024P25	COIL RF FIX 10UH 10%		1
L124	K805653G5	COIL ASM 5 1/2T		1
L125	K805653G6	COIL ASM 6 1/2T		1
L126	K805653G5	COIL ASM 5 1/2T		1
L127	A700024P25	COIL RF FIX 10UH 10%		1
L128	A700024P25	COIL RF FIX 10UH 10%		1
L129	A700024P13	COIL RF FIX 1.0UH 10%		1
L130	K805653G2	COIL ASM 2 1/2T	G1/G2/G3	1
L130	K805653G1	COIL ASM 1 1/2T	G4/G5/G6	1
L131	K805653G3	COIL ASM 3 1/2T	G1/G2/G3	1
L131	K805653G2	COIL ASM 2 1/2T	G4/G5/G6	1
L301	J709099P13	COIL RF VAR 4-1/2T TAP		1
L302	J709099P13	COIL RF VAR 4-1/2T TAP		1
L303	J707486P6	COIL RF FIX 0.47UH 10%		1
L304	J709099P2	COIL RF VAR 4-1/2T TAP		1
L305	J707486P2	COIL RF FIX 3.3UH 10%		1
L306	J709099P7	COIL RF VAR 4-1/2T TAP		1
L308	J709099P6	COIL RF VAR 4-1/2T TAP		1
L310	J709099P2	COIL RF VAR 4-1/2T TAP		1
L312	J708428P2	COIL RF VAR 45 MHZ		1
L313	J709099P4	COIL RF VAR 3-1/2T TAP		1
L314	J709099P3	COIL RF VAR 3-1/2T TAP		1

Pos	Code No	Description		Qt
L401	J707486P10	COIL RF FIX 1.5UH 10%		1
L403	K805570G2	COIL ASM		1
L404	K805570G1	COIL ASM		1
L405	J708428P1	COIL RF VAR 45 MHZ		1
L406	K805570G3	COIL ASM		1
L407	A700024P25	COIL RF FIX 10UH 10%		1
L408	J708428P2	COIL RF VAR 45 MHZ		1
L409	J707431P1	COIL RF VAR 455KHZ 25%		1
L410	J707431P1	COIL RF VAR 455KHZ 25%		1
L501	A700024P13	COIL RF FIX 1.0UH 10%		1
L502	A700024P13	COIL RF FIX 1.0UH 10%		1
L503	A700024P13	COIL RF FIX 1.0UH 10%		1
L504	A700024P13	COIL RF FIX 1.0UH 10%		1
L505	L855671P1	COIL RADIO FREQUENCY		1
L506	A700024P13	COIL RF FIX 1.0UH 0%		1
L507	A700024P13	COIL RF FIX 1.0UH 0%		1
L508	A700024P4	COIL RF FIX 0.18UH 10%		1
L601	A700024P13	COIL RF FIX 1.0UH 10%		1
L602	A700024P13	COIL RF FIX 1.0UH 10%		1
L603	A700024P13	COIL RF FIX 1.0UH 10%		1
L604	A700024P13	COIL RF FIX 1.0UH 10%		1
L605	L855671P1	COIL RADIO FREQUENCY		1
L606	A700024P13	COIL RF FIX 1.0UH 10%		1
L607	A700024P13	COIL RF FIX 1.0UH 10%		1
L608	A700024P2	COIL RF FIX 0.12UH 10%		1
L609	K805653G10	COIL RF FIXED 10 1/2T		1
L701	K805570G4	COIL ASM		1
L702	A700024P43	COIL RF FIX 330UH 10%		1
L703	A700024P27	COIL RF FIX 15UH 10%		1
P102	J707064P112	CONN PWB FEM 12-CKT		1
P105	A701883P4	CONN PWB FEM RECP		1
Q100	J707388P1	TSTR NPN SI BFR 53		1
Q101	J707388P1	TSTR NPN SI BFR 53		1
Q102	A701940P1	TSTR NPN SI RF-PWR 0.4W		1
Q103	A700063P1	TSTR NPN SI RF-PWR 2.0W		1
Q104	J709163P1	TSTR NPN SI RF-PWR 10W		1
Q105	J708133P1	TSTR NPN SI RF-PWR 28W	G1/G2/G3	1

DATE: 3/11/1987

Pos	Code No	Description	Qt
Q106	J707432P1	TSTR PNP SI BCX 18	1
Q107	J707386P1	TSTR NPN SI BCW 32	1
Q108	J708406P1	TSTR NPN SI BD 233	1
Q109	J707386P1	TSTR NPN SI BCW 32	1
Q201	J707435P1	TSTR PNP SI BC 369	1
Q202	J707386P1	TSTR NPN SI BCW 32	1
Q203	J707432P1	TSTR PNP SI BCX 18	1
Q204	J707386P1	TSTR NPN SI BCW 32	1
Q301	J706011P2	TSTR NPN SI BFR 91A	1
Q302	J708315P1	TSTR JFET SI 2N5245	1
Q401	J707817P1	TSTR JFET SI J 309	1
Q402	J707817P1	TSTR JFET SI J 309	1
Q403	J707419P1	TSTR JFET SI BF511	1
Q404	J708418P1	TSTR NPN SI BFS 20	1
Q405	J708418P1	TSTR NPN SI BFS 20	1
Q406	J708418P1	TSTR NPN SI BFS 20	1
Q407	J707386P1	TSTR NPN SI BCW 32	1
Q408	J707387P1	TSTR PNP SI BCW 30	1
Q501	J707817P1	TSTR JFET SI J 309	1
Q502	J707388P1	TSTR NPN SI BFR 53	1
Q601	J707817P1	TSTR JFET SI J 309	1
Q602	J707388P1	TSTR NPN SI BFR 53	1
Q603	J708318P1	TSTR PNP SI BFT 92	1
Q604	J707433P1	TSTR MFET SI BF 989	1
Q605	J707386P1	TSTR NPN SI BCW 32	1
Q612	J707386P1	TSTR NPN SI BCW 32	1
Q613	J707386P1	TSTR NPN SI BCW 32	1
Q701	J707419P1	TSTR JFET SI BF511	1
Q702	J707387P1	TSTR PNP SI BCW 30	1
R000	J707385P332	RES MFLM 1/8W 3K3 5%	1
R100	J707385P122	RES MFLM 1/8W 1K2 5%	1
R101	J707385P472	RES MFLM 1/8W 4K7 5%	1
R102	J707385P270	RES MFLM 1/8W 27R 5%	1
R103	J707385P470	RES MFLM 1/8W 47R 5%	1
R104	J707385P102	RES MFLM 1/8W 1K0 5%	1
R105	J707385P182	RES MFLM 1/8W 1K8 5%	1
R106	J707385P470	RES MFLM 1/8W 47R 5%	1

Pos	Code No	Description	Qt
R107	J707385P680	RES MFLM 1/8W 68R 5%	1
R108	J707385P820	RES MFLM 1/8W 82R 5%	1
R109	J707385P100	RES MFLM 1/8W 10R 5%	1
R110	J707385P100	RES MFLM 1/8W 10R 5%	1
R111	J707385P100	RES MFLM 1/8W 10R 5%	1
R112	J707385P947	RES MFLM 1/8W 4R7 20%	1
R113	J707385P100	RES MFILM 1/8W 10R 5%	1
R114	J707385P947	RES MFLM 1/8W 4R7 20%	1
R115	J707385P100	RES MFLM 1/8W 10R 5% G1/G2/G3	1
R116	J707385P220	RES MFLM 1/8W 22R 5% G1/G2/G3	1
R117	J707385P220	RES MFLM 1/8W 22R 5% G1/G2/G3	1
R118	J707385P473	RES MFLM 1/8W 47K 5%	1
R119	J707385P820	RES MFLM 1/8W 82R 5%	1
R120	J707385P820	RES MFLM 1/8W 82R 5%	1
R121	J707385P333	RES MFLM 1/8W 33K 5%	1
R122	J707385P221	RES MFLM 1/8W 220R 5%	1
R123	J707385P221	RES MFLM 1/8W 220R 5%	1
R132	J708538P9	RES VAR CERM 200K 20%	1
R133	J708538P4	RES VAR CERM 5K0 20%	1
R134	J707385P100	RES MFLM 1/8W 10R 5%	1
R135	J706147P2	RES THERM PTC 80R 25%	1
R136	J707385P682	RES MFLM 1/8W 6K8 5%	1
R137	J707385P223	RES MFLM 1/8W 22K 5%	1
R138	J707385P472	RES MFLM 1/8W 4K7 5%	1
R139	J707385P472	RES MFLM 1/8W 4K7 5%	1
R140	J707385P333	RES MFLM 1/8W 33K 5%	1
R141	J707385P333	RES MFLM 1/8W 33K 5%	1
R142	J707385P104	RES MFLM 1/8W 100K 5%	1
R143	J707385P222	RES MFLM 1/8W 2K2 5%	1
R144	J707385P222	RES MFLM 1/8W 2K2 5%	1
R145	J707385P682	RES MFLM 1/8W 6K8 5%	1
R146	J707385P273	RES MFLM 1/8W 27K 5%	1
R147	J707385P104	RES MFLM 1/8W 100K 5%	1
R148	J707385P123	RES MFLM 1/8W 12K 5%	1
R149	J707385P472	RES MFLM 1/8W 4K7 5%	1
R150	J707385P391	RES MFLM 1/8W 390R 5%	1
R151	J707385P683	RES MFLM 1/8W 68K 5%	1

DATE: 3/11/1987

Pos	Code No	Description	Qt
R152	J707385P104	RES MFLM 1/8W 100K 5%	1
R153	J707385P221	RES MFLM 1/8W 220R 5%	1
R154	J707385P274	RES MFLM 1/8W 270K 5%	1
R155	J707385P222	RES MFLM 1/8W 2K2 5%	1
R156	J707385P102	RES MFLM 1/8W 1K0 5%	1
R157	J707385P392	RES MFLM 1/8W 3K9 5%	1
R201	J707385P561	RES MFLM 1/8W 560R 5%	1
R202	J707385P271	RES MFLM 1/8W 270R 5%	1
R203	J707385P153	RES MFLM 1/8W 15K 5%	1
R204	J707385P153	RES MFLM 1/8W 15K 5%	1
R205	J707385P472	RES MFLM 1/8W 4K7 5%	1
R206	J707385P272	RES MFLM 1/8W 2K7 5%	1
R207	J707385P563	RES MFLM 1/8W 56K 5%	1
R208	J707385P563	RES MFLM 1/8W 56K 5%	1
R209	J707385P271	RES MFLM 1/8W 270R 5%	1
R301	J707385P471	RES MFLM 1/8W 470R 5%	1
R302	J707385P391	RES MFLM 1/8W 390R 5%	1
R303	J707385P104	RES MFLM 1/8W 100K 5%	1
R304	J707385P104	RES MFLM 1/8W 100K 5%	1
R305	J707385P900	RES MFLM 1/8W OR JUMPER	1
R306	J707385P222	RES MFLM 1/8W 2K2 5%	1
R307	J707385P681	RES MFLM 1/8W 680R 5%	1
R308	J707385P470	RES MFLM 1/8W 47R 5%	1
R309	J707385P270	RES MFLM 1/8W 27R 5%	1
R310	J707385P104	RES MFLM 1/8W 100K 5%	1
R311	J707385P560	RES MFLM 1/8W 56R 5%	1
R312	J707385P104	RES MFLM 1/8W 100K 5%	1
R314	J707385P104	RES MFLM 1/8W 100K 5%	1
R316	J707385P104	RES MFLM 1/8W 100K 5%	1
R317	J707385P182	RES MFLM 1/8W 1K8 5%	1
R318	J707385P100	RES MFLM 1/8W 10R 5%	1
R319	J707385P101	RES MFLM 1/8W 100R 5%	1
R321	J707385P270	RES MFLM 1/8W 27R 5%	1
R322	J707385P391	RES MFLM 1/8W 390R 5%	1
R323	J707385P104	RES MFLM 1/8W 100K 5%	1
R324	J707385P104	RES MFLM 1/8W 100K 5%	1
R325	J707385P100	RES MFLM 1/8W 10R 5%	1

Pos	Code No	Description	Qt
R326	J707385P392	RES MFLM 1/8W 3K9 5%	1
R327	J707385P102	RES MFLM 1/8W 1K0 5%	1
R401	J707385P560	RES MFLM 1/8W 56R 5%	1
R402	J707385P100	RES MFLM 1/8W 10R 5%	1
R403	J707385P332	RES MFLM 1/8W 3K3 5%	1
R405	J707385P100	RES MFLM 1/8W 10R 5%	1
R406	J707385P820	RES MFLM 1/8W 82R 5%	1
R407	J707385P470	RES MFLM 1/8W 47R 5%	1
R408	J707385P470	RES MFLM 1/8W 47R 5%	1
R410	J707385P272	RES MFLM 1/8W 2K7 5%	1
R411	J707385P682	RES MFLM 1/8W 6K8 5%	1
R412	J707385P272	RES MFLM 1/8W 2K7 5%	1
R413	J707385P821	RES MFLM 1/8W 820R 5%	1
R414	J707385P220	RES MFLM 1/8W 22R 5%	1
R415	J707385P222	RES MFLM 1/8W 2K2 5%	1
R416	J707385P562	RES MFLM 1/8W 5K6 5%	1
R417	J707385P103	RES MFLM 1/8W 10K 5%	1
R418	J707385P153	RES MFLM 1/8W 15K 5%	1
R419	J707385P182	RES MFLM 1/8W 1K8 5%	1
R420	J707385P182	RES MFLM 1/8W 1K8 5%	1
R421	J707385P182	RES MFLM 1/8W 1K8 5%	1
R422	J707385P473	RES MFLM 1/8W 47K 5%	1
R423	J707385P153	RES MFLM 1/8W 15K 5%	1
R424	J708538P5	RES VAR CERM 10K 20%	1
R425	J707385P272	RES MFLM 1/8W 2K7 5%	1
R426	J707385P563	RES MFLM 1/8W 56K 5%	1
R427	J707385P273	RES MFLM 1/8W 27K 5%	1
R428	J707385P683	RES MFLM 1/8W 68K 5%	1
R429	J707385P104	RES MFLM 1/8W 100K 5%	1
R430	J707385P334	RES MFLM 1/8W 330K 5%	1
R431	J707385P473	RES MFLM 1/8W 47K 5%	1
R432	J707385P473	RES MFLM 1/8W 47K 5%	1
R433	J707385P271	RES MFLM 1/8W 270R 5%	1
R434	J707385P102	RES MFLM 1/8W 1K0 5%	1
R435	J706147P3	RES THERM PTC 250R 25%	1
R436	J707385P392	RES MFLM 1/8W 3K9 5%	1
R437	J707406P7	RES THERM NTC 220R 10%	1

DATE: 3/11/1987

Pos	Code No	Description	Qt
R438	J707385P222	RES MFLM 1/8W 2K2 5%	1
R439	J707385P392	RES MFLM 1/8W 3K9 5%	1
R440	J707385P392	RES MFLM 1/8W 3K9 5%	1
R441	J707385P101	RES MFLM 1/8W 100R 5%	1
R442	J708538P6	RES VAR CERM 20K 20%	1
R444	J707385P473	RES MFLM 1/8W 47K 5%	1
R445	J707385P273	RES MFLM 1/8W 27K 5%	1
R446	J707385P224	RES MFLM 1/8W 220K 5%	1
R447	J707385P392	RES MFLM 1/8W 3K9 5%	1
R448	J707385P101	RES MFLM 1/8W 100R 5%	1
R449	J707385P470	RES MFLM 1/8W 47R 5%	1
R450	J707385P103	RES MFLM 1/8W 10K 5%	1
R451	J707385P332	RES MFLM 1/8W 3K3 5%	1
R501	J707385P122	RES MFLM 1/8W 1K2 5%	1
R502	J707385P122	RES MFLM 1/8W 1K2 5%	1
R503	J707385P122	RES MFLM 1/8W 1K2 5%	1
R504	J707385P104	RES MFLM 1/8W 100K 5%	1
R505	J707385P104	RES MFLM 1/8W 100K 5%	1
R506	J707385P104	RES MFLM 1/8W 100K 5%	1
R508	J707385P103	RES MFLM 1/8W 10K 5%	1
R509	J707385P910	RES MFLM 1/8W 1R0 20%	1
R510	J707385P332	RES MFLM 1/8W 3K3 5%	1
R512	J707385P561	RES MFLM 1/8W 560R 5%	1
R513	J707385P183	RES MFLM 1/8W 18K 5%	1
R514	J707385P472	RES MFLM 1/8W 4K7 5%	1
R515	J707385P470	RES MFLM 1/8W 47R 5%	1
R517	J707385P101	RES MFLM 1/8W 100R 5%	1
R518	J707385P470	RES MFLM 1/8W 47R 5%	1
R519	J707385P221	RES MFLM 1/8W 220R 5%	1
R529	J707385P392	RES MFLM 1/8W 3K9 5%	1
R601	J707385P122	RES MFLM 1/8W 1K2 5%	1
R602	J707385P122	RES MFLM 1/8W 1K2 5%	1
R603	J707385P122	RES MFLM 1/8W 1K2 5%	1
R604	J707385P104	RES MFLM 1/8W 100K 5%	1
R605	J707385P104	RES MFLM 1/8W 100K 5%	1
R606	J707385P104	RES MFLM 1/8W 100K 5%	1
R607	J707385P561	RES MFLM 1/8W 560R 5%	1

Pos	Code No	Description	Qt
R608	J707385P221	RES MFLM 1/8W 220R 5%	1
R609	J707385P472	RES MFLM 1/8W 4K7 5%	1
R610	J707385P183	RES MFLM 1/8W 18K 5%	1
R611	J707385P271	RES MFLM 1/8W 270R 5%	1
R612	J707385P222	RES MFLM 1/8W 2K2 5%	1
R613	J707385P101	RES MFLM 1/8W 100R 5%	1
R614	J707385P561	RES MFLM 1/8W 560R 5%	1
R615	J707385P272	RES MFLM 1/8W 2K7 5%	1
R616	J707385P470	RES MFLM 1/8W 47R 5%	1
R617	J707385P683	RES MFLM 1/8W 68K 5%	1
R618	J707385P683	RES MFLM 1/8W 68K 5%	1
R619	J707385P104	RES MFLM 1/8W 100K 5%	1
R620	J707385P271	RES MFLM 1/8W 270R 5%	1
R621	J707385P561	RES MFLM 1/8W 560R 5%	1
R622	J707385P102	RES MFLM 1/8W 1K0 5%	1
R623	J707385P224	RES MFLM 1/8W 220K 5%	1
R624	J707385P223	RES MFLM 1/8W 22K 5%	1
R625	J707385P470	RES MFLM 1/8W 47R 5%	1
R626	J707385P100	RES MFLM 1/8W 10R 5%	1
R627	J707385P103	RES MFLM 1/8W 10K 5%	1
R628	J707385P224	RES MFLM 1/8W 220K 5%	1
R629	J707385P393	RES MFLM 1/8W 39K 5%	1
R630	J707385P100	RES MFLM 1/8W 10R 5%	1
R631	J707385P824	RES MFLM 1/8W 820K 5%	1
R632	J707385P223	RES MFLM 1/8W 22K 5%	1
R633	J707385P824	RES MFLM 1/8W 820K 5%	1
R634	J707385P123	RES MFLM 1/8W 12K 5%	1
R635	J707385P102	RES MFLM 1/8W 1K0 5%	1
R636	J707385P332	RES MFLM 1/8W 3K3 5%	1
R637	J707385P181	RES MFLM 1/8W 180R 5%	1
R638	J707385P154	RES MFLM 1/8W 150K 5%	1
R639	J707385P682	RES MFLM 1/8W 6K8 5%	1
R640	J707385P105	RES MFLM 1/8W 1M0 10%	1
R641	J707385P184	RES MFLM 1/8W 180K 5%	1
R642	J707385P184	RES MFLM 1/8W 180K 5%	1
R643	J707385P105	RES MFLM 1/8W 1M0 10%	1
R644	J707385P333	RES MFLM 1/8W 33K 5%	1

DATE: 3/11/1987

Pos	Code No	Description	Qt
U603	J708165P4	IC LIN OP-AMP 358	1
U604	J708165P4	IC LIN OP-AMP 358	1
U606	J707243P1	IC DIG REG 4094	1
U607	J707374P3	IC PLL PRESC 12017	1
U608	B800902P1	IC PLL SYNCUSTOM DES	1
U609	J708165P4	IC LIN OP-AMP 358	1
U610	J708503P2	IC LIN CMPAR LM 339	1
U615	J708621P2	CPLR OPTO PC 827	1
U616	J708503P2	IC LIN CMPAR LM 339	1
W001	A700184P1	RES WIRE JMPR OR JUMPER	1
W003	J707256P1	COIL FIX	1
W004	J707256P1	COIL FIX	1
W005	J708717P1	STRAP	1
W006	J709241P1	STRAP	1
W007	J709241P1	STRAP	1
Y401	J708426P1	CRYSTAL UNIT 44.5450MHZ	1
Y701	J708424P4	CRYSTAL UNIT 7.3978MHZ	1
Z401	J708330P1	FLTR CRY 45.0 +/-7.5KHZ G1/G4	1
Z401	J708330P2	FLTR CRY 45.0 +/-6KHZ G2/G5	1
Z401	J708330P3	FLTR CRY 45.0 +/-3.75KHZ G3/G6	1
Z402	J707446P1	FLTR CER 455K +/-10KHZ G1/G4	1
Z402	J707446P3	FLTR CER 455K +/-7.5KHZ G2/G5	1
Z402	J707446P4	FLTR CER 455K +/-4.5KHZ G3/G6	1
Z403	J707446P1	FLTR CER 455K +/-10KHZ G1/G4	1
Z403	J707446P3	FLTR CER 455K +/-7.5KHZ G2/G5	1
Z403	J707446P4	FLTR CER 455K +/-4.5KHZ G3/G6	1
	M905762P1R0	BD PW G1/G2/G3	1
	M905762P2R0	BD PW G4/G5/G6	1
		NON ELECTRONICAL PARTS	
	J708966G1	HEAT SINK MODF	1
	K805569G2	SHIELD METALLIZED	1
	J706281P6	CORE SCREW FERR U10	8
	J707256P4	COIL FIX	1
	J707256P4	COIL FIX	1
	J707256P4	COIL FIX	1

Pos	Code No	Description	Qt

DATE: 3/11/1987

Pos	Code No	Description	Qt
R645	J707385P103	RES MFLM 1/8W 10K 5%	1
R646	J707385P682	RES MFLM 1/8W 6K8 5%	1
R647	J707385P333	RES MFLM 1/8W 33K 5%	1
R648	J707385P823	RES MFLM 1/8W 82K 5%	1
R649	J707385P393	RES MFLM 1/8W 39K 5%	1
R650	J707385P393	RES MFLM 1/8W 39K 5%	1
R651	J707385P333	RES MFLM 1/8W 33K 5%	1
R652	J707385P472	RES MFLM 1/8W 4K7 5%	1
R653	J707385P333	RES MFLM 1/8W 33K 5%	1
R654	J707385P562	RES MFLM 1/8W 5K6 5%	1
R655	J707385P183	RES MFLM 1/8W 18K 5%	1
R656	J707385P393	RES MFLM 1/8W 39K 5%	1
R657	J707385P823	RES MFLM 1/8W 82K 5%	1
R658	J707385P154	RES MFLM 1/8W 150K 5%	1
R659	J707385P103	RES MFLM 1/8W 10K 5%	1
R660	J707385P333	RES MFLM 1/8W 33K 5%	1
R661	J707385P393	RES MFLM 1/8W 39K 5%	1
R662	J707385P473	RES MFLM 1/8W 47K 5%	1
R663	J708538P6	RES VAR CERM 20K20%	1
R664	J707385P563	RES MFLM 1/8W 56K 5%	1
R665	J707385P224	RES MFLM 1/8W 220K 5%	1
R666	J707385P124	RES MFLM 1/8W 120K 5%	1
R667	J707385P124	RES MFLM 1/8W 120K 5%	1
R668	J707385P122	RES MFLM 1/8W 1K2 5%	1
R669	J707385P221	RES MFLM 1/8W 220R 5%	1
R670	J707385P103	RES MFLM 1/8W 10K 5%	1
R671	J707385P562	RES MFLM 1/8W 5K6 5%	1
R672	J707385P822	RES MFLM 1/8W 8K2 5%	1
R673	J707385P822	RES MFLM 1/8W 8K2 5%	1
R674	J707385P101	RES MFLM 1/8W 100R 5%	1
R675	J708538P5	RES VAR CERM 10K 20%	1
R676	J707385P102	RES MFLM 1/8W 1K0 5%	1
R677	J708538P5	RES VAR CERM 10K 20%	1
R678	J707385P470	RES MFLM 1/8W 47R 5%	1
R679	J707385P821	RES MFLM 1/8W 820R 5%	1
R680	J708538P6	RES VAR CERM 20K 20%	1
R681	J707385P223	RES MFLM 1/8W 22K 5%	1

Pos	Code No	Description		Qt
R682	J707385P223	RES MFLM 1/8W 22K 5%		1
R683	J707385P223	RES MFLM 1/8W 22K 5%		1
R684	J707385P183	RES MFLM 1/8W 18K 5%		1
R685	J707385P183	RES MFLM 1/8W 18K 5%		1
R686	J707385P103	RES MFLM 1/8W 10K 5%		1
R687	J707385P103	RES MFLM 1/8W 10K 5%		1
R689	J707385P105	RES MFLM 1/8W 1M0 10%		1
R690	J707385P124	RES MFLM 1/8W 120K 5%		1
R691	J707385P273	RES MFLM 1/8W 27K 5%		1
R692	J707385P223	RES MFLM 1/8W 22K 5%		1
R693	J707385P105	RES MFLM 1/8W 1M0 10%		1
R694	J707385P223	RES MFLM 1/8W 22K 5%		1
R695	J707385P105	RES MFLM 1/8W 1M0 10%		1
R696	J707385P223	RES MFLM 1/8W 22K 5%		1
R697	J707385P105	RES MFLM 1/8W 1M0 10%		1
R698	J707385P272	RES MFLM 1/8W 2K7 5%		1
R701	J708666P1	RES THERM NTC 5K 2%		1
R702	A701250P413	RES MFILM 133K 1% 1/4W		1
R703	A701250P213	RES MFILM 1K33 1% 1/4W		1
R704	A701250P325	RES MFILM 17K8 1% 1/4W		1
R705	J708666P2	RES THERM NTC 20K 2%		1
R706	J708666P2	RES THERM NTC 20K 2%		1
R707	J707385P104	RES MFLM 1/8W 100K 5%		1
R708	J707385P105	RES MFLM 1/8W 1M0 10%		1
R709	J707385P181	RES MFLM 1/8W 180R 5%		1
R710	J707385P101	RES MFLM 1/8W 100R 5%		1
R711	J707385P223	RES MFLM 1/8W 22K 5%		1
R712	J707385P154	RES MFLM 1/8W 150K 5%		1
R713	J707385P821	RES MFLM 1/8W 820R 5%		1
R714	J707385P104	RES MFLM 1/8W 100K 5%		1
U100	J708165P2	IC LIN OP-AMP 324		1
U201	J708333P1	IC LIN VR FIX 4785		1
U401	J707449P1	IC LIN IF-AMP 3357		1
U402	M905766G1	INT CKT SQ 4002	G1/G2/G4/G5	1
U402	M905766G2	INT CKT SQ 4003	G3/G6	1
U601	J708165P4	IC LIN OP-AMP 358		1
U602	J708165P4	IC LIN OP-AMP 358		1

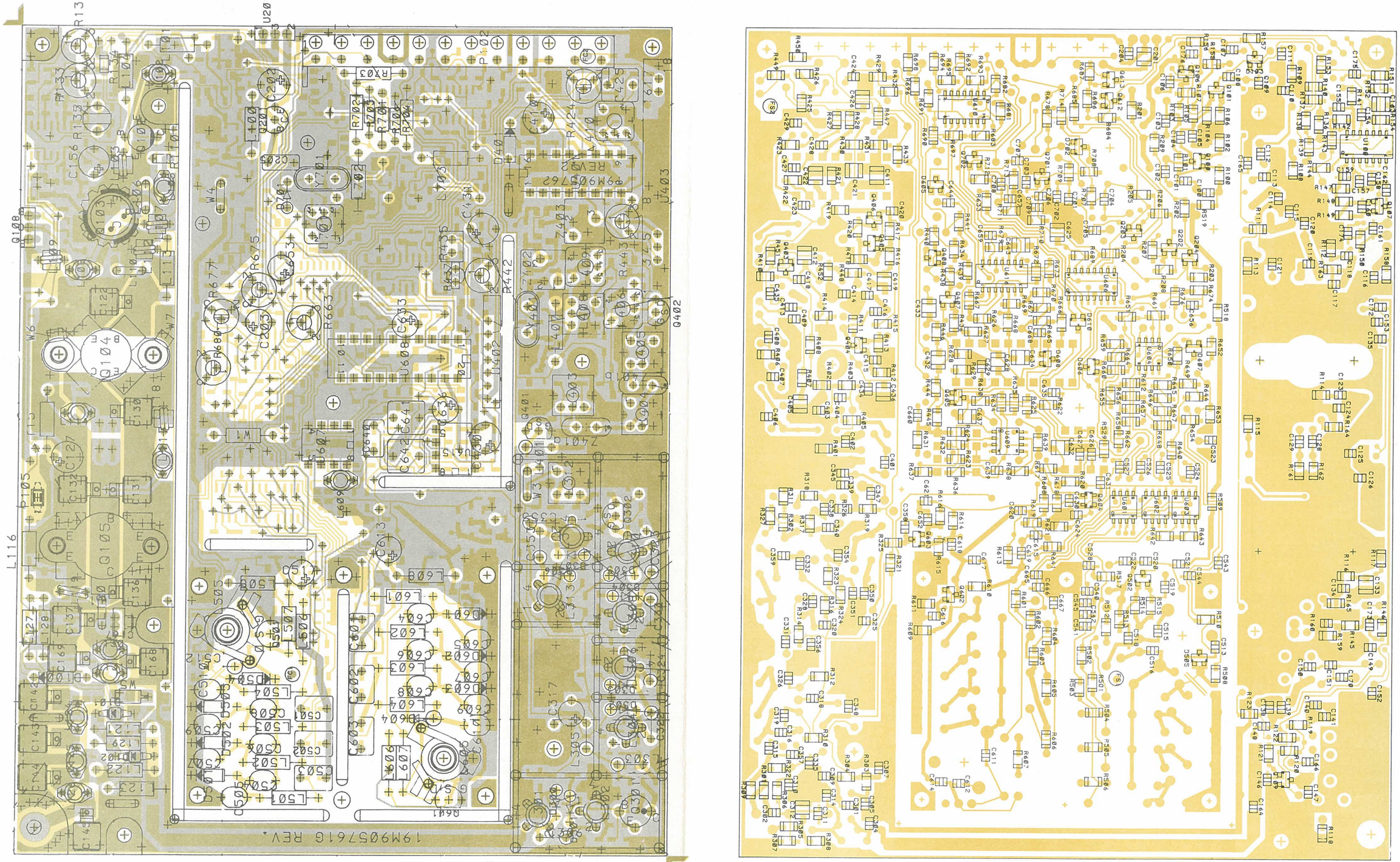

RADIO FREQUENCY UNIT RF611X
COMPONENT LAYOUT

D404.251/2

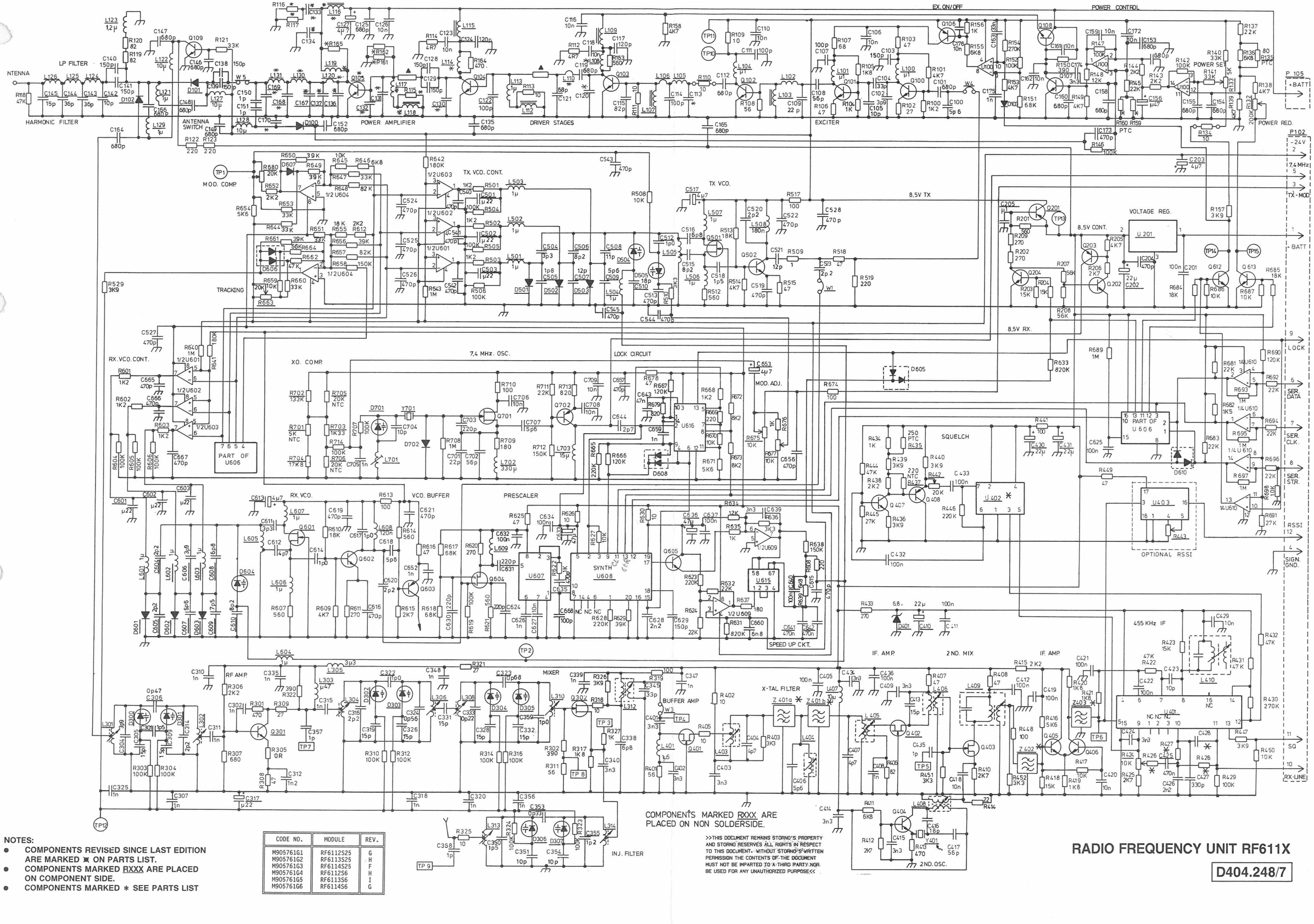

NOTES:

- COMPONENTS REVISED SINCE LAST EDITION ARE MARKED ✖ ON PARTS LIST.
- COMPONENTS MARKED RXXX ARE PLACED ON COMPONENT SIDE.
- COMPONENTS MARKED ∗ SEE PARTS LIST

CODE NO.	MODULE	REV.
M905761G1	RF6112S25	G
M905761G2	RF6113S25	H
M905761G3	RF6114S25	F
M905761G4	RF6112S6	H
M905761G5	RF6113S6	I
M905761G6	RF6114S6	G

>>THIS DOCUMENT REMAINS STORNO'S PROPERTY AND STORNO RESERVES ALL RIGHTS IN RESPECT TO THIS DOCUMENT. WITHOUT STORNO'S WRITTEN PERMISSION THE CONTENTS OF THE DOCUMENT MUST NOT BE IMPARTED TO A THIRD PARTY, NOR BE USED FOR ANY UNAUTHORIZED PURPOSE<<

RADIO FREQUENCY UNIT RF611X

D404.248/7

*	25W	6W
C122	100p	150p
C130	82p	68p
C131	180p	150p
C132	180p	
C133	100n	
C134	120p	
C136	47p	
C137	100p	
C168	56p	82p
C169	13p	36p
C170	3p9	10p
L108	G2	G6
L110	P1	P2
L114	G2	G4
L116	P1	
L117	G4	
L118	G1	
L119	G4	
L120	P2	P1
L130	G2	G1
L131	G3	G2
Q 105	+	
R 115	10	
R 116	22	
R 117	22	

	Channel spacing KHz		
	12.5	20	25
Z401a Z401b	P3	P2	P1
Z402	P4	P3	P1
Z403	P4	P3	P1
U402	G2	G1	G1

NOTE:
COMPONENTS MARKED RXXX ARE PLACED ON COMPONENT SIDE.

SIMPLEX
RADIO FREQUENCY UNIT RF 611X

D404 248/3

ANTENNA
LP FILTER
HARMONIC FILTER
ANTENNA SWITCH
POWER AMPLIFIER
DRIVER STAGES
EXCITER
EX. ON/OFF
POWER CONTROL
POWER SET
POWER RED.
PTC
P 105
P102
- BATT
- 24V
7,4MHz
TX-MOD
MOD. COMP.
TX. VCO. CONT.
TX VCO.
8,5V TX
VOLTAGE REG.
8,5V CONT.
8,5V RX.
TRACKING
RX. VCO. CONT.
XO. COMP.
7,4 MHz. OSC.
LOCK CIRCUIT
MOD. ADJ.
RX. VCO.
VCO. BUFFER
PRESCALER
SYNTH U608
SQUELCH
PART OF U606
OPTIONAL RSSI
SPEED UP CKT.
RF AMP.
MIXER
BUFFER AMP
X-TAL FILTER
IF. AMP.
2 ND. MIX
IF. AMP
455 KHz IF
2 ND. OSC.
INJ. FILTER
LOCK
SER. DATA
SER. CLK
SER. STR.
RSSI
SIGN. GND.
SQ
RX-LINE

COMPONENTS MARKED * SEE PARTS LIST.

COMPONENTS MARKED RXXX ARE PLACED ON NON SOLDERSIDE.

RADIO FREQUENCY BOARD RF611X

CODE NO. M905761GX REV.M D404.248/8

DOC. ISSUE 03.13.90

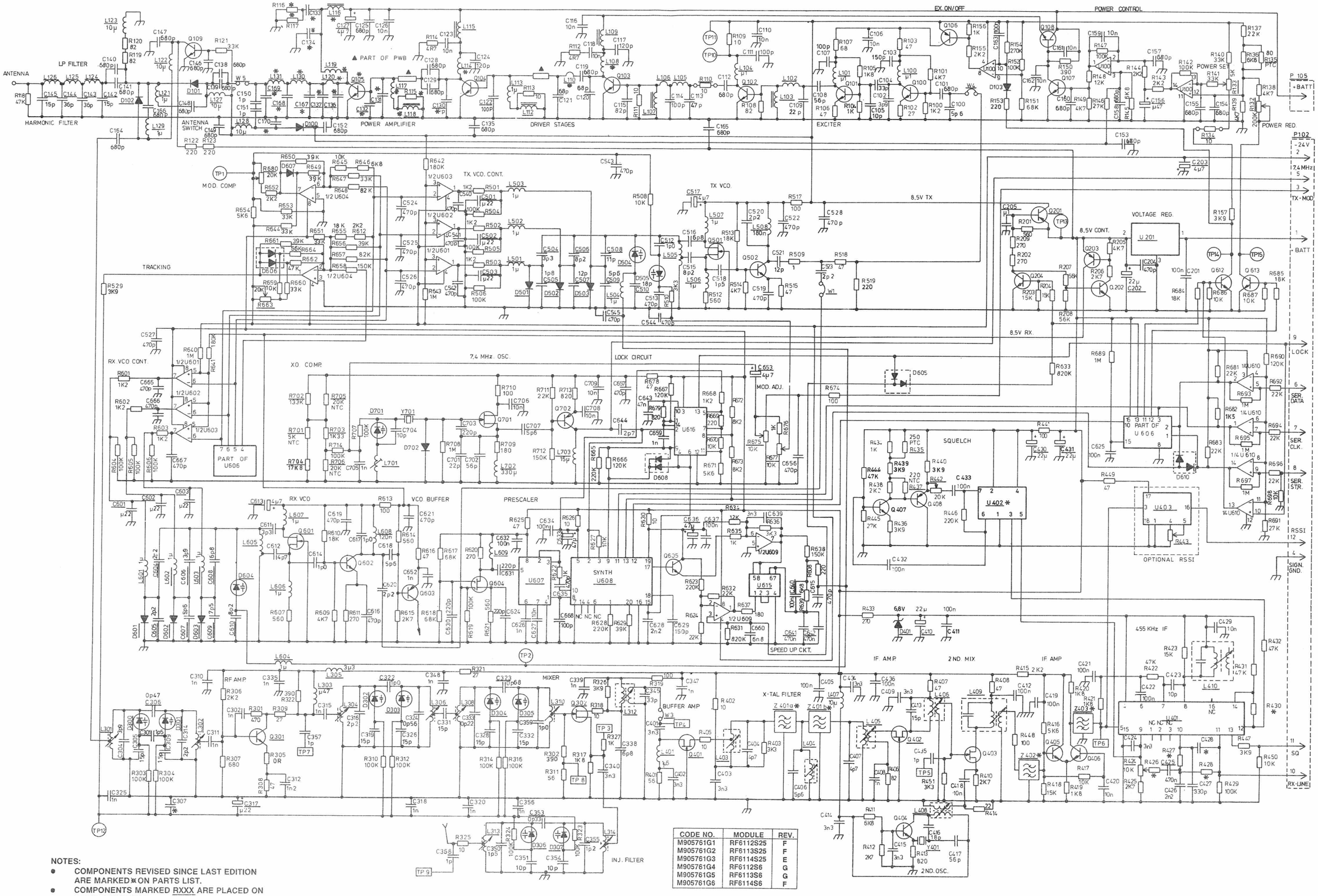

CODE NO.	MODULE	REV.
M905761G1	RF6112S25	F
M905761G2	RF6113S25	F
M905761G3	RF6114S25	E
M905761G4	RF6112S6	G
M905761G5	RF6113S6	G
M905761G6	RF6114S6	F

NOTES:

- COMPONENTS REVISED SINCE LAST EDITION ARE MARKED ✱ ON PARTS LIST.
- COMPONENTS MARKED RXXX ARE PLACED ON COMPONENT SIDE.
- COMPONENTS MARKED ✻ SEE PARTS LIST.

RADIO FREQUENCY BOARD RF611X

D404.248/6

*	25W	6W
C122	100p	150p
C130	82p	68p
C131	180p	150p
C132	180p	
C133	100n	
C134	120p	
C136	47p	
C137	100p	
C168	56p	82p
C169	13p	36p
[illegible]	3p9	10p
[illegible]3	G2	G6
[illegible]0	P1	P2
L114	G2	G4
L116	P1	
L117	G4	
L118	G1	
L119	G4	
L120	P2	P1
L130	G2	G1
L131	G3	G2
Q105	*	
R115	10	
R116	22	
R117	22	

	Channel spacing KHz		
	12.5	20	25
Z401a Z401b	P3	P2	P1
Z402	P4	P3	P1
Z403	P4	P3	P1
U402	G2	G1	G1

CODE NO.	MODULE	REV.
M905761G1	RF6112S25	C
M905761G2	RF6113S25	C
M905761G3	RF6114S25	C
M905761G4	RF6112S6	C
M905761G5	RF6113S6	C
M905761G6	RF6114S6	C

NOTE:
COMPONENTS MARKED RXXX ARE PLACED ON COMPONENT SIDE.

RADIO FREQUENCY UNIT RF611X

D404.248/5

*	25W	6W
C122	100 p	150 p
C130	82 p	68 p
C131	180 p	150 p
C132	180 p	
C133	100 n	
C134	120 p	
C136	47 p	
C137	100 p	
C168	56 p	82 p
C169	13 p	36 p
C170	3p9	10 p
L 108	G2	G6
L 110	P1	P2
L 4	G2	G4
L 5	P1	
L 117	G4	
L 118	G1	
L 119	G4	
L 120	P2	P1
L 130	G2	G1
L 131	G3	G2
Q 105	*	
R 115	10	
R 116	22	
R 117	22	

	Channel spacing KHz		
	12.5	20	25
Z401a Z401b	P3	P2	P1
Z402	P4	P3	P1
Z403	P4	P3	P1
U402	G2	G1	G1

NOTE:
COMPONENTS MARKED RXXX ARE PLACED ON COMPONENT SIDE.

SIMPLEX
RADIO FREQUENCY UNIT RF 611X

REV. A

D404.248/4

*	25W	6W
C122	100 p	150 p
C130	82 p	68 p
C131	180 p	150 p
C132	180 p	
C133	100 n	
C134	120 p	
C136	47 p	
C137	100 p	
C168	56 p	82 p
C169	13 p	36 p
C170	3p9	10 p
L108	G2	G6
L110	P1	F2
L114	G2	G4
L116	P1	
L117	G4	
L118	G1	
L119	G4	
L120	P2	P1
L130	G2	G1
L131	G3	G2
Q 105	+	
R 115	10	
R 116	22	
R 117	22	

	Channel spacing KHz		
	12.5	20	25
Z401a Z401b	P3	P2	P1
Z402	P4	P3	P1
Z403	P4	P3	P1
U402	G2	G1	G1

NOTE:
COMPONENTS MARKED RXXX ARE PLACED ON COMPONENT SIDE.

SIMPLEX
RADIO FREQUENCY UNIT RF 611X

D404 248/3

Storno

Storno

*	25W	6W
C122	100p	150p
C130	82p	68p
C131	180p	150p
C132	180p	
C133	100n	
C134	120p	
C136	47p	
C137	68p	
C168	56p	82p
C169	13p	36p
C170	3p9	10p
L108	G2	G6
L110	P1	P2
L114	G2	G4
L116	P1	
L117	G4	
L118	G1	
L119	G4	
L120	P2	P1
L130	G2	G1
L131	G3	G2
Q105	+	
R115	10	
R116	22	
R117	22	

	Channel spacing KHz		
	12.5	20	25
Z401a Z401b	P3	P2	P1
Z402	P4	P3	P1
Z403	P4	P3	P1
U402	G2	G1	G1

This document remains Storno's property and Storno reserves all rights in respect to this document. Without Storno's written permission the contents of the document must not be imparted to a third party nor be used for any unauthorized purposes.

COMPONENTS MARKED RXXX ARE PLACED ON NON SOLDERSIDE.

SIMPLEX
RADIO FREQUENCY UNIT RF611X

D404.248/2

CHAPTER 3b

RF633x

RADIO FREQUENCY BOARD RF633x

- Electrical diagram
- Component layout
- Part list

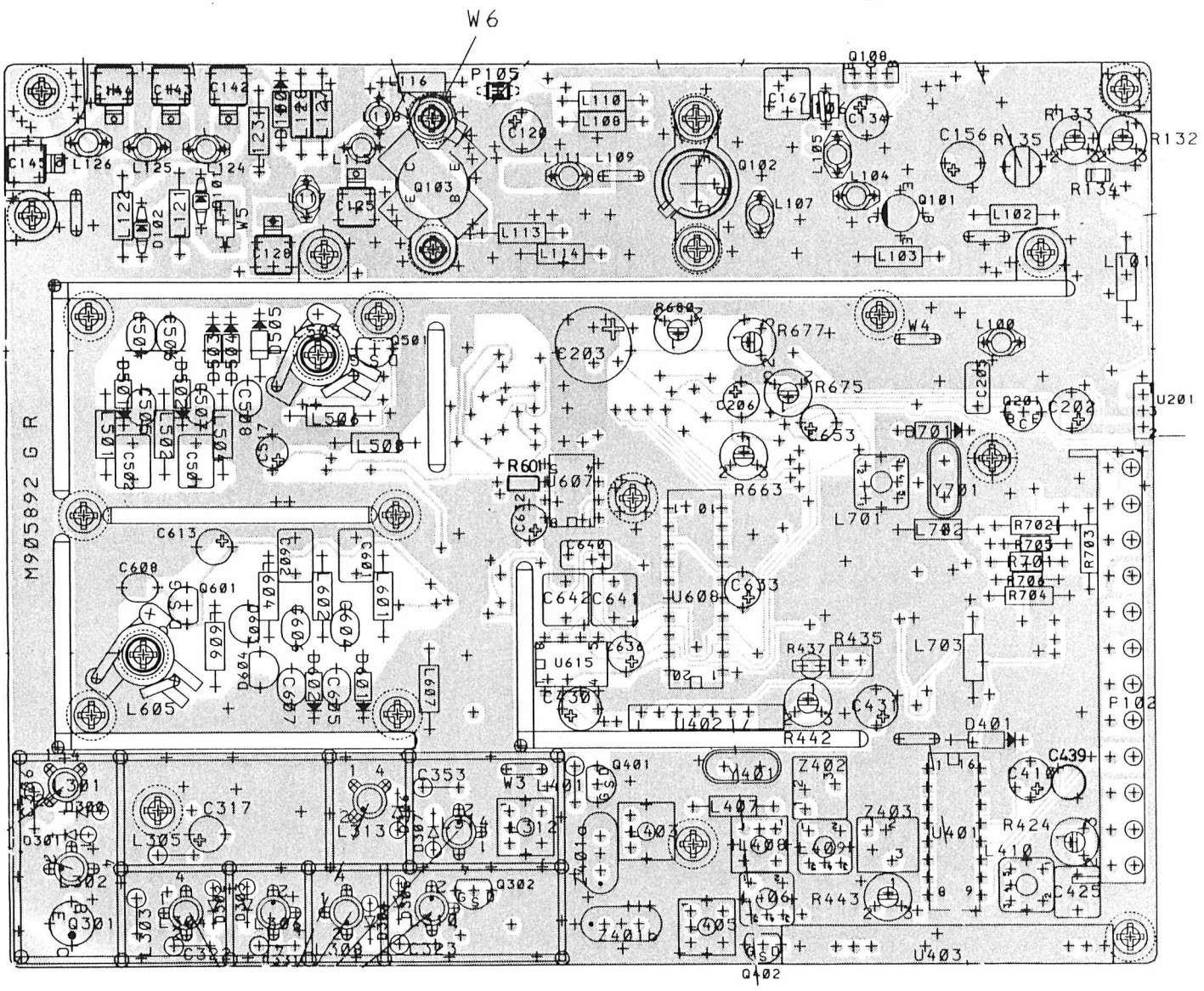

CODE NO.		
	M905892G1	RF6332S25
	M905892G2	RF6333S25
	M905892G3	RF6334S25
	M905892G4	RF6332S6
	M905892G5	RF6333S6
	M905892G6	RF6334S6

RADIO FREQUENCY UNIT RF633X
COMPONENT LAYOUT - COMPONENT SIDE

REV. 2

D404.445/2

PARTS LIST FOR RADIO FREQUENCY BOARD RF633X : M905892GX BD REV. 2/S

Pos	Code No.	Description	Qt
		COMPONENTS REVISED SINCE LAST EDITION ARE MARKED *	
	M906892G1	RF6332S25 CH. SPAC. 25kHz/25W OUT	
	M906892G2	RF6333S25 CH. SPAC. 20kHz/25W OUT	
	M906892G3	RF6334S25 CH. SPAC. 12.5kHz/25W OUT	
	M906892G4	RF6332S6 CH. SPAC. 25kHz/25W OUT	
	M906892G5	RF6333S6 CH. SPAC. 20kHz/25W OUT	
	M906892G6	RF6334S6 CH. SPAC. 12.5kHz/25W OUT	
C100	J707809P13	CAP CER NPO 10P 5%	1
C101	21R13741M25	CAP CER CL2 1N5 10%	1
C102	21R13741M29	CAP CER CL2 2N2 10%	1
C103	21R13740A59	CAP CER NPO 150P 5%	1
C104	J707809P15	CAP CER NPO 15P 5%	1
C105	J707809P17	CAP CER NPO 22P 5%	1
C106	J707809P15	CAP CER NPO 15P 5%	1
C107	21R13741M29	CAP CER CL2 2N2 10%	1
C108	21R13741M29	CAP CER CL2 2N2 10%	1
C109	J707809P25	CAP CER NPO 100P 5%	1
C110	J707809P23	CAP CER NPO 68P 5% G1/G2/G3	1
C110	J707809P17	CAP CER NPO 22P 5% G4/G5/G6	1
C111	21R13741M29	CAP CER CL2 2N2 10%	1
C112	21R13741M45	CAP CER CL2 10N 10%	1
C113	21R13741M29	CAP CER CL2 2N2 10%	1
C114	21R13741M29	CAP CER CL2 2N2 10%	1
C115	J707809P27	CAP CER NPO 150P 5% G1/G2/G3	1
C115	J707809P23	CAP CER NPO 68P 5% G4/G5/G6	1
C116	J707809P27	CAP CER NPO 150P 5% G1/G2/G3	1
C116	J707809P24	CAP CER NPO 82P 5% G4/G5/G6	1
C117	J707809P27	CAP CER NPO 150P 5% G4/G5/G6	1
C118	J707809P27	CAP CER NPO 150P 5% G4/G5/G6	1
C119	J707809P27	CAP CER NPO 150P 5% G4/G5/G6	1
C120	J707353P6	CAP ELECT 4U7 25V	1
C121	21R13741M45	CAP CER CL2 10N 10%	1
C122	21R13741M29	CAP CER CL2 2N2 10%	1
C123	21R13741M45	CAP CER CL2 10N 10%	1
C124	21R13741M29	CAP CER CL2 2N2 10%	1
C125	A700006P40	CAP MICA 170P 5% G1/G2/G3	1
C125	A700006P38	CAP MICA 150P 5% G4/G5/G6	1
C126	J709524P59	CAP CER RF 270P 5% G1/G2/G3	1
C126	J709524P49	CAP CER RF 100P 5% G4/G5/G6	1
C127	J709524P51	CAP CER RF 120P 5% G1/G2/G3	1
C127	J709524P45	CAP CER RF 68P 5% G4/G5/G6	1
C128	A700006P35	CAP MICA 110P 5% G1/G2/G3	1
C128	A700006P26	CAP MICA 47P 5% G4/G5/G6	1
C130	J707809P14	CAP CER NPO 12P 5%	1
C131	J707809P13	CAP CER NPO 10P 5%	1
C132	J707809P12	CAP CER NPO 8P2 .25P	1
C133	J707809P13	CAP CER NPO 10P 5%	1
C134	J707353P6	CAP ELECT 4U7 ,25V	1
C136	21R13741C05	CAP CER CL2 33N 5%	1
C137	21R13741M29	CAP CER CL2 2N2 10%	1
C138	21R13741M29	CAP CER CL2 2N2 10%	1
C139	21R13741M29	CAP CER CL2 2N2 10%	1
C140	21R13741M29	CAP CER CL2 2N2 10%	1
C141	21R13741M29	CAP CER CL2 2N2 10%	1
C142	A700006P14	CAP MICA 18P 5%	1
C143	A700006P26	CAP MICA 47P 5%	1
C144	A700006P26	CAP MICA 47P 5%	1
C145	A700006P18	CAP MICA 24P 5%	1
C146	21R13741M29	CAP CER CL2 2N2 10%	1
C147	21R13741M29	CAP CER CL2 2N2 10%	1
C148	21R13741M29	CAP CER CL2 2N2 10%	1
C149	21R13741M29	CAP CER CL2 2N2 10%	1
C150	J707809P10	CAP CER NPO 5P6 .25P G1/G2/G3	1
C150	J707809P12	CAP CER NPO 8P2 .25P G4/G5/G6	1
C151	J707809P10	CAP CER NPO 5P6 .25P G1/G2/G3	1
C151	J707809P12	CAP CER NPO 8P2 .25P G4/G5/G6	1
C152	21R13741M29	CAP CER CL2 2N2 10%	1
C153	21R13741M29	CAP CER CL2 2N2 10%	1
C154	21R13741M29	CAP CER CL2 2N2 10%	1
C155	21R13741M29	CAP CER CL2 2N2 10%	1
C156	J707353P3	CAP ELECT 0U47 ,50V	1
C157	21R13741M29	CAP CER CL2 2N2 I0%	1
C158	21R13741M29	CAP CER CL2 2N2 10%	1
C159	21R13741M45	CAP CER CL2 10N 10%	1
C160	21R13740A71	CAP CER NPO 470P 5%	1
C161	21R13741M29	CAP CER CL2 2N2 10%	1
C162	21R13741M45	CAP CER CL2 10N 10%	1
C163	21R13741C05	CAP CER CL2 33N 5%	1
C164	21R13741M29	CAP CER CL2 2N2 10%	1
C165	J707809P16	CAP CER NPO 18P 5% G1/G2/G3	1
C165	J707809P17	CAP CER NPO 22P 5% G4/G5/G6	1
C166	21R13741M21	CAP CER CL2 1N0 10%	1
C167	J707412P13	CAP PYES 470N 10%	1
C168	21R13741M29	CAP CER CL2 2N2 10%	1

Pos	Code No.	Description	Qt
C169	J707809P1	CAP CER NPO 1P0 .25P	1
C170	21R13741M45	CAP CER CL2 10N 10%	1
C171	21R13741M45	CAP CER CL2 10N 10%	1
C172	21R13741M45	CAP CER CL2 10N 10%	1
C201	21R13741C17	CAP CER CL2 100N 5%	1
C202	J707444P8	CAP TA SOL 22U 16V	1
C203	J706005P12	CAP ELECT 47U 40V	1
C204	21R13741M29	CAP CER CL2 2N2 10%	1
C205	J707412P9	CAP PYES 100N 10%	1
C206	J707444P4	CAP TA SOL 1U 35V	1
C301	21R13740A63	CAP CER NPO 220P 5%	1
C302	21R13741M21	CAP CER CL2 1N0 10%	1
C304	21R13740A21	CAP CER NPO 5P6 .25P	1
C305	21R13740A39	CAP CER NPO 27P 5%	1
C306	J707483P4	CAP PHEN 0P56 5%	1
C307	21R13741M21	CAP CER CL2 1N0 10%	1
C309	21R13740A39	CAP CER NPO 27P 5%	1
C310	21R13741M21	CAP CER CL2 1N0 10%	1
C311	21R13740A21	CAP CER NPO 5P6 .25P	1
C312	21R13740C19	CAP CER NPO 1N2 5%	1
C315	21R13740A21	CAP CER NPO 5P6 .25P	1
C317	J707444P2	CAP TA SOL 0U22 35V	1
C318	21R13741M21	CAP CER CL2 1N0 10%	1
C319	21R13740A39	CAP CER NPO 27P 5%	1
C320	21R13741M21	CAP CER CL2 1N0 10%	1
C322	J707483P7	CAP PHEN 1P00 5%	1
C323	J707483P6	CAP PHEN 0P82 5%	1
C324	21R13740A15	CAP CER NPO 3P3 .25P	1
C325	21R13741M21	CAP CER CL2 1N0 10%	1
C326	21R13740A39	CAP CER NPO 27P 5%	1
C328	21R13740A39	CAP CER NPO 27P 5%	1
C331	J707483P6	CAP PHEN 0P82 5%	1
C332	21R13740A39	CAP CER NPO 27P 5%	1
C333	21R13740A15	CAP CER NPO 3P3 .25P	1
C334	21R13740A17	CAP CER NPO 3P9 .25P	1
C335	21R13741M21	CAP CER CL2 1N0 10%	1
C338	21R13740A41	CAP CER NPO 33P 5%	1
C339	21R13741M21	CAP CER CL2 1N0 10%	1
C340	21R13741A33	CAP CER CL2 3N3 5%	1
C345	21R13741M21	CAP CER CL2 1N0 10%	1
C347	21R13741M21	CAP CER CL2 1N0 10%	1
C348	21R13741M21	CAP CER CL2 1N0 10%	1
C350	21R13740A21	CAP CER NPO 5P6 .25P	1
C351	21R13740A35	CAP CER NPO 18P 5%	1
C353	J707483P8	CAP PHEN 1P20 5%	1
C354	21R13740A35	CAP CER NPO 18P 5%	1
C355	21R13740A19	CAP CER NPO 4P7 .25P	1
C356	21R13741M21	CAP CER CL2 1N0 10%	1
C357	21R13740A03	CAP CER NPO 1P0 .25P	1
C358	21R13740A03	CAP CER NPO 1P0 .25P	1
C359	21R13741M21	CAP CER CL2 1N0 10%	1
C401	21R13741A33	CAP CER CL2 3N3 5%	1
C402	21R13741A33	CAP CER CL2 3N3 5%	1
C403	21R13741A33	CAP CER CL2 3N3 5%	1
C404	21R13740A41	CAP CER NPO 33P 5%	1
C405	21R13741C17	CAP CER CL2 100N 5%	1
C406	21R13740A21	CAP CER NPO 5P6 .25P	1
C407	21R13740A39	CAP CER NPO 27P 5%	1
C408	21R13741M21	CAP CER CL2 1N0 10%	1

Pos	Code No.	Description	Qt
C409	21R13741A33	CAP CER CL2 3N3 5%	1
C410	J707444P8	CAP TA SOL 22U 16V	1
C411	21R13741C17	CAP CER CL2 100N 5%	1
C412	21R13741C17	CAP CER CL2 100N 5%	1
C413	21R13740A41	CAP CER NPO 33P 5%	1
C414	21R13741A33	CAP CER CL2 3N3 5%	1
C415	21R13740A63	CAP CER NPO 220P 5%	1
C416	21R13740A57	CAP CER NPO 120P 5%	1
C417	21R13740A39	CAP CER NPO 27P 5%	1
C418	21R13741M45	CAP CER CL2 10N 10%	1
C419	21R13741C17	CAP CER CL2 100N 5%	1
C420	21R13741M45	CAP CER CL2 10N 10%	1
C421	21R13741C17	CAP CER CL2 100N 5%	1
C422	21R13741C17	CAP CER CL2 100N 5%	1
C423	21R13740A29	CAP CER NPO 10P 5%	1
C424	21R13741A33	CAP CER CL2 3N3 5%	1
C425	J707444P5	CAP TA SOL 2U2 35V * G1/G2/G4/G5	1
C425	J707412P13	CAP PYES 470N 10% * G3/G6	1
C426	2113740B59	CAP CER NPO 270P 5% * G1/G2/G4/G5	1
C426	21R13740C25	CAP CER NPO 2N2 5% * G3/G6	1
C427	21R13740A67	CAP CER NPO 330P 5% * G3/G6	1
C428	2113740A57	CAP CER NPO 120P 5% * G1/G2/G4/G5	1
C428	21R13740A65	CAP CER NPO 270P 5% * G3/G6	1
C429	21R13741M45	CAP CER CL2 10N 10%	1
C430	J707444P8	CAP TA SOL 22U 16V	1
C431	J707444P8	CAP TA SOL 22U 16V	1
C432	21R13741C17	CAP CER CL2 100N 5%	1
C433	21R13741C17	CAP CER CL2 100N 5%	1
C434	21R13741A33	CAP CER CL2 3N3 5%	1
C435	21R13740A03	CAP CER NPO 1P0 .25P	1
C436	21R13741C17	CAP CER CL2 100N 5%	1
C437	21R13740A46	CAP CER NPO 47P 5%	1
C438	21R13741M45	CAP CER CL2 10N 10%	1
C501	J707412P11	CAP PYES 220N 10%	1
C502	J707412P11	CAP PYES 220N 10%	1
C504	A700235P16	CAP CER N150 18P 5%	1
C505	A700235P11	CAP CER N150 6P8 .25P	1
C506	A700235P20	CAP CER N150 39P 5%	1
C507	A700235P19	CAP CER N150 33P 5%	1
C508	A700235P25	CAP CER N150 100P 5%	1
C509	21R13740A19	CAP CER NPO 4P7 .25P	1
C512	21R13740A17	CAP CER NPO 3P9 .25P	1
C513	21R13741A09	CAP CER CL2 330P 5%	1
C514	21R13741M25	CAP CER CL2 1N5 10%	1
C517	J707444P6	CAP TA SOL 4U7 35V	1
C518	21R13740A05	CAP CER NPO 1P2 .25P	1
C519	21R13741M25	CAP CER CL2 1N5 10%	1
C520	21R13740A63	CAP CER NPO 220P 5%	1
C521	21R13740A37	CAP CER NPO 22P 5%	1
C522	21R13741M25	CAP CER CL2 1N5 10%	1
C523	21R13740A11	CAP CER NPO 2P2 .25P	1
C524	21R13741M13	CAP CER CL2 470P 10%	1

Pos	Code No.	Description	Qt
C525	21R13741M13	CAP CER CL2 470P 10%	1
C527	21R13741M13	CAP CER CL2 470P 10%	1
C528	21R13741C17	CAP CER CL2 100N 5%	1
C540	21R13741M13	CAP CER CL2 470P 10%	1
C541	21R13741M13	CAP CER CL2 470P 10%	1
C543	21R13741M13	CAP CER CL2 470P 10%	1
C544	21R13741M13	CAP CER CL2 470P 10%	1
C545	21R13740A55	CAP CER NP0 100P 5%	1
C601	J707412P11	CAP PYES 220N 10%	1
C602	J707412P11	CAP PYES 220N 10%	1
C603	21R13741C17	CAP CER CL2 100N 5%	1
C604	A700235P13	CAP CER N150 10P 5%	1
C605	A700235P10	CAP CER N150 5P6 .25P	1
C606	A700235P38	CAP CER N150 16P 5%	1
C607	A700235P11	CAP CER N150 6P8 .25P	1
C608	A700233P9	CAP CER CL2 2N2 20%	1
C610	21R13740A55	CAP CER NP0 100P 5%	1
C611	21R13740A13	CAP CER NP0 2P7 .25P	1
C612	21R13741M25	CAP CER CL2 1N5 10%	1
C613	J707444P6	CAP TA SOL 4U7 35V	1
C614	21R13741M25	CAP CER CL2 1N5 10%	1
C615	21R13741M37	CAP CER CL2 4N7 10%	1
C616	21R13741M25	CAP CER CL2 1N5 10%	1
C617	21R13740A49	CAP CER NP0 56P 5%	1
C618	21R13740A03	CAP CER NP0 1P0 .25P	1
C619	21R13741M25	CAP CER CL2 1N5 10%	1
C620	21R13740A55	CAP CER NP0 100P 5%	1
C621	21R13740A33	CAP CER NP0 15P 5%	1
C622	21R13740A07	CAP CER NP0 1P5 .25P	1
C623	21R13741C17	CAP CER CL2 100N 5%	1
C624	21R13740A55	CAP CER NP0 100P 5%	1
C625	21R13741M25	CAP CER CL2 1N5 10%	1
C626	21R13741M21	CAP CER CL2 1N0 10%	1
C627	21R13741C17	CAP CER CL2 100N 5%	1
C628	21R13740A15	CAP CER NP0 3P3 .25P	1
C629	21R13740A59	CAP CER NP0 150P 5%	1
C630	21R13741C17	CAP CER CL2 100N 5%	1
C631	21R13741M25	CAP CER CL2 1N5 10%	1
C632	J707444P6	CAP TA SOL 4U7 35V	1
C633	J707444P17	CAP TA SOL 47U 10V	1
C634	21R13741C17	CAP CER CL2 100N 5%	1
C635	21R13741M05	CAP CER CL2 220P 10%	1
C636	J707444P17	CAP TA SOL 47U 10V	1
C637	21R13741C17	CAP CER CL2 100N 5%	1
C638	21R13741M21	CAP CER CL2 1N0 10%	1
C639	21R13741A33	CAP CER CL2 3N3 5%	1
C640	J707412P8	CAP PYES 68N 10%	1
C641	J707412P13	CAP PYES 470N 10%	1
C642	J707412P13	CAP PYES 470N 10%	1
C643	21R13741C17	CAP CER CL2 100N 5%	1
C644	21R13740A13	CAP CER NP0 2P7 .25P	1
C646	21R13740A57	CAP CER NP0 120P 5%	1
C647	21R13740A29	CAP CER NP0 10P 5%	1
C652	21R13741C09	CAP CER CL2 47N 5%	1
C653	J707444P6	CAP TA SOL 4U7 35V	1
C654	A700005P9	CAP PYES 22N 10%	1
C656	21R13741M13	CAP CER CL2 470P 10%	1
C657	21R13741M13	CAP CER CL2 470P 10%	1
C659	21R13741M21	CAP CER CL2 1N0 10%	1

Pos	Code No.	Description	Qt
C660	21R13741M45	CAP CER CL2 10N 10%	1
C666	21R13741M13	CAP CER CL2 470P 10%	1
C667	21R13741M13	CAP CER CL2 470P 10%	1
C701	21R13740A37	CAP CER NP0 22P 5%	1
C702	J708702P22	CAP CER N750 56P 5%	1
C703	21R13740A63	CAP CER NP0 220P 5%	1
C705	21R13741M21	CAP CER CL2 1N0 10%	1
C706	21R13741M45	CAP CER CL2 10N 10%	1
C707	21R13740A21	CAP CER NP0 5P6 .25P	1
C708	21R13741M45	CAP CER CL2 10N 10%	1
C709	21R13741M45	CAP CER CL2 10N 10%	1
D100	A700047P3	DIO SI SIG 1N6263	1
D101	J706892P1	DIO SI PIN UM 940	1
D102	J706892P1	DIO SI PIN UM 940	1
D103	J707390P1	DIO SI SIG BAV 74	1
D300	J707928P2	DIO SI CAP BB 809	1
D301	J707928P2	DIO SI CAP BB 809	1
D302	J707928P2	DIO SI CAP BB 809	1
D303	J707928P2	DIO SI CAP BB 809	1
D304	J707928P2	DIO SI CAP BB 809	1
D305	J707928P2	DIO SI CAP BB 809	1
D306	J707928P2	DIO SI CAP BB 809	1
D307	J707928P2	DIO SI CAP BB 809	1
D401	A700025P8	DIO SI ZENR 6V8,5% 0.4W	1
D501	J707928P2	DIO SI CAP BB 809	1
D502	J707928P2	DIO SI CAP BB 809	1
D503	J707928P2	DIO SI CAP BB 809	1
D504	J707928P2	DIO SI CAP BB 809	1
D505	J707928P2	DIO SI CAP BB 809	1
D506	J707769P1	DIO SI CAP BBY 31	1
D601	J707928P2	DIO SI CAP BB 809	1
D602	J707928P2	DIO SI CAP BB 809	1
D603	J709536P1	DIO SI CAP MV 211	1
D604	J709536P1	DIO SI CAP MV 211	1
D605	J707389P1	DIO SI SIG BAV 99	1
D606	J708681P1	DIO SI SIG BAW 56	1
D607	J707390P1	DIO SI SIG BAV 74	1
D608	J707390P1	DIO SI SIG BAV 74	1
D610	J708681P1	DIO SI SIG BAW 56	1
D701	A700073P1	DIO SI CAP BB 409	1
D702	J707390P1	DIO SI SIG BAV 74	1
L100	K805653G9	COIL ASM 9 1/2T	1
L101	A700024P7	COIL RF FIX 0.33UH 10%	1
L102	A700024P3	COIL RF FIX 0.15UH 10%	1
L103	A700024P12	COIL RF FIX 0.82UH 10%	1
L104	K805653G2	COIL ASM 2 1/2T	1
L105	K805653G5	COIL ASM 5 1/2T G1/G2/G3	1
L105	K805653G8	COIL ASM 8 1/2T G4/G5/G6	1
L106	J707339G1	COIL FIX ASM	1
L107	K805653G4	COIL ASM 4 1/2T	1
L108	A700024P3	COIL RF FIX 0.15UH 10%	1
L109	J707256P2	COIL FIX	1
L110	J709287P1	CORE TOR FERR	1
L111	J707256P1	COIL FIX G1/G2/G3	1
L111	K805653G1	COIL ASM 1 1/2T G4/G5/G6	1

PARTS LIST FOR RADIO FREQUENCY BOARD RF633X : M905892GX BD REV. 2/S

Pos	Code No.	Description	Qt
L113	A700024P3	COIL RF FIX 0.15UH 10%	1
L114	J709287P1	CORE TOR FERR	1
L115	J707256P2	COIL FIX	1
L116	J709287P1	CORE TOR FERR	1
L117	J709603P2	COIL G1/ 2/G3	1
L117	K805653G6	COIL ASM 6 1/2T G4/ 5/G6	1
L118	J709603P1	COIL G1/ 2/G3	1
L118	J707426P6	COIL FIX G4/ 5/G6	1
L121	A700024P18	COIL RF FIX 2.7UH 10%	1
L122	A700024P25	COIL RF FIX 10UH 10%	1
L123	A700024P25	COIL RF FIX 10UH 10%	1
L124	K805653G7	COIL ASM 7 1/2 T	1
L125	K805653G7	COIL ASM 7 1/2 T	1
L126	K805653G8	COIL ASM 8 1/2T	1
L127	A700024P25	COIL RF FIX 10UH 10%	1
L128	A700024P25	COIL RF FIX 10UH 10%	1
L301	J709099P8	COIL RF VAR 7-1/2	1
L302	J709099P15	COIL RF VAR 7-1/2 ,TAP	1
L303	J707486P11	COIL RF FIX 2.2UH 10%	1
L304	J709099P8	COIL RF VAR 7-1/2	1.
L305	J707486P2	COIL RF FIX 3.3UH 10%	1
L306	J709099P8	COIL RF VAR 7-1/2	1
L308	J709099P8	COIL RF VAR 7-1/2	1
L310	J709099P9	COIL RF VAR 7-1/2 ,TAP	1
L312	J708428P1	COIL RF VAR 45 MHZ	1
L313	J709099P12	COIL RF VAR 5-1/2 ,TAP	1
L314	J709099P14	COIL RF VAR 5-1/2 ,TAP	1
L401	J707486P3	COIL RF FIX 6.8UH 10%	1
L403	K805570G6	COIL ASM	1
L405	J708428P1	COIL RF VAR 45 MHZ	1
L406	K805570G5	COIL ASM	1
L407	A700024P25	COIL RF FIX 10UH 10%	1
L408	J708428P1	COIL RF VAR 45 MHZ	1
L409	J707431P1	COIL RF VAR 455KHZ 25%	1
L410	J707431P1	COIL RF VAR 455KHZ 25%	1
L501	A700024P21	COIL RF FIX 4.7UH 10%	1
L502	A700024P21	COIL RF FIX 4.7UH 10%	1
L504	A700024P21	COIL RF FIX 4.7UH 10%	1
L505	L855671P2	COIL RADIO FREQUENCY	1
L506	A700024P21	COIL RF FIX 4.7UH 10%	1
L508	A700024P5	COIL RF FIX 0.22UH 10%	1
L601	A700024P21	COIL RF FIX 4.7UH 10%	1
L602	A700024P21	COIL RF FIX 4.7UH 10%	1
L604	A700024P21	COIL RF FIX 4.7UH 10%	1
L605	L855671P2	COIL RADIO FREQUENCY	1
L606	A700024P21	COIL RF FIX 4.7UH 10%	1
L607	A700024P4	COIL RF FIX 0.18UH 10%	1
L701	K805570G7	COIL ASM	1
L702	A700024P43	COIL RF FIX 330UH 10%	1
L703	A700024P27	COIL RF FIX 15UH 10%	1
P102	J707064P112	CONN PWB FEM 1 -CKT	1
P105	A701883P4	CONN PWB FEM RECP	1
Q100	J707388P1	TSTR NPN SI BFR 53	1
Q101	A701940P1	TSTR NPN SI RF-PWR 0.4W	1
Q102	J709517P1	TSTR NPN SI RF-PWR 3W	1
Q103	J709162P1	TSTR NPN SI RF-PWR 27W G1/G2/G3	1
Q103	J709163P1	TSTR NPN SI RF-PWR 10W G4/G5/G6	1
Q106	J707432P1	TSTR PNP SI BCX 18	1
Q107	J707386P1	TSTR NPN SI BCW 32	1
Q108	J708406P1	TSTR NPN SI BD 233	1
Q109	J707386P1	TSTR NPN SI BCW 32	1
Q201	J707435P1	TSTR PNP SI BC 369	1
Q202	J707386P1	TSTR NPN SI BCW 32	1
Q203	J707432P1	TSTR PNP SI BCX 18	1
Q204	J707386P1	TSTR NPN SI BCW 32	1
Q301	J706011P2	TSTR NPN SI BFR 91	1
Q302	J707817P1	TSTR JFET SI J 309	1
Q401	J707817P1	TSTR JFET SI J 309	1
Q402	J707817P1	TSTR JFET SI J 309	1
Q403	J707419P1	TSTR JFET SI BF511	1
Q404	J708418P1	TSTR NPN SI BFS 20	1
Q405	J708418P1	TSTR NPN SI BFS 20	1
Q406	J708418P1	TSTR NPN SI BFS 20	1
Q407	J707386P1	TSTR NPN SI BCW 32	1
Q408	J707387P1	TSTR PNP SI BCW 30	1
Q501	J707817P1	TSTR JFET SI J 309	1
Q502	J708318P1	TSTR PNP SI BFT 92	1
Q601	J707817P1	TSTR JFET SI J 309	1
Q603	J708318P1	TSTR PNP SI BFT 92	1
Q604	J707433P1	TSTR MFET SI BF 989	1
Q605	J707386P1	TSTR NPN SI BCW 32	1
Q612	J707386P1	TSTR NPN SI BCW 32	1
Q613	J707386P1	TSTR NPN SI BCW 32	1
Q701	J707419P1	TSTR JFET SI BF511	1
Q702	J707387P1	TSTR PNP SI BCW 30	1
R000	J707385P332	RES MFLM 1/8W 3K3 5%	1
R100	J707385P101	RES MFLM 1/8W 100R 5% G4/G5/G6	1
R101	J707385P470	RES MFLM 1/8W 47R 5%	1
R102	J707385P471	RES MFLM 1/8W 470R 5%	1
R103	J707385P390	RES MFLM 1/8W 39R 5%	1
R104	J707385P331	RES MFLM 1/8W 330R 5%	1
R105	J707385P122	RES MFLM 1/8W 1K2 5%	1
R106	J707385P100	RES MFLM 1/8W 10R 5%	1
R107	J707385P100	RES MFLM 1/8W 10R 5%	1
R108	J707385P560	RES MFLM 1/8W 56R 5%	1
R109	J707385P100	RES MFLM 1/8W 10R 5%	1
R110	J707385P100	RES MFLM 1/8W 10R 5% G1/G2/G3	1
R110	J707385P910	RES MFLM 1/8W 1R0 20% G4/G5/G6	1
R111	J707385P220	RES MFLM 1/8W 22R 5%	1
R112	J707385P947	RES MFLM 1/8W 4R7 20%	1
R113	J707385P100	RES MFLM 1/8W 10R 5%	1
R114	J707385P910	RES MFLM 1/8W 1R0 20% G1/G2/G3	1
R114	J707385P918	RES MFLM 1/8W 1R8 20% G4/G5/G6	1
R115	J707385P910	RES MFLM 1/8W 1R0 20% G1/G2/G3	1
R115	J707385P918	RES MFLM 1/8W 1R8 20% G4/G5/G6	1
R116	J707385P121	RES MFLM 1/8W 120R 5%	1
R117	J707385P220	RES MFLM 1/8W 22R 5%	1
R118	J707385P473	RES MFLM 1/8W 47K 5%	1
R119	J707385P820	RES MFLM 1/8W 82R 5%	1

Pos	Code No.	Description	Qt
R120	J707385P820	RES MFLM 1/8W 82R 5%	1
R121	J707385P333	RES MFLM 1/8W 33K 5%	1
R122	J707385P221	RES MFLM 1/8W 220R 5%	1
R123	J707385P221	RES MFLM 1/8W 220R 5%	1
R124	J707385P101	RES MFLM 1/8W 100R 5% G1/G2/G3	1
R124	J707385P221	RES MFLM 1/8W 220R 5% G4/G5/G6	1
R125	J707385P330	RES MFLM 1/8W 33R 5%	1
R126	J707385P330	RES MFLM 1/8W 33R 5%	1
R127	J707385P330	RES MFLM 1/8W 33R 5%	1
R128	J707385P100	RES MFLM 1/8W 10R 5%	1
R129	J707385P121	RES MFLM 1/8W 120R 5% G1/G2/G3	1
R129	J707385P560	RES MFLM 1/8W 56R 5% G4/G5/G6	1
R130	J707385P121	RES MFLM 1/8W 120R 5% G1/G2/G3	1
R130	J707385P560	RES MFLM 1/8W 56R 5% G4/G5/G6	1
R131	J707385P392	RES MFLM 1/8W 3K9 5%	1
R132	J708538P9	RES VAR CERM 200K 20%	1
R133	J708538P4	RES VAR CERM 5K0 20%	1
R134	J707385P100	RES MFLM 1/8W 10R 5%	1
R135	J706147P2	RES THERM PTC 80R 25%	1
R136	J707385P682	RES MFLM 1/8W 6K8 5%	1
R137	J707385P223	RES MFLM 1/8W 22K 5%	1
R138	J707385P472	RES MFLM 1/8W 4K7 5%	1
R139	J707385P472	RES MFLM 1/8W 4K7 5%	1
R140	J707385P333	RES MFLM 1/8W 33K 5%	1
R141	J707385P333	RES MFLM 1/8W 33K 5%	1
R142	J707385P104	RES MFLM 1/8W 100K 5%	1
R143	J707385P222	RES MFLM 1/8W 2K2 5%	1
R144	J707385P222	RES MFLM 1/8W 2K2 5%	1
R145	J707385P223	RES MFLM 1/8W 22K 5%	1
R146	J707385P104	RES MFLM 1/8W 100K 5%	1
R147	J707385P104	RES MFLM 1/8W 100K 5%	1
R148	J707385P123	RES MFLM 1/8W 12K 5%	1
R149	J707385P472	RES MFLM 1/8W 4K7 5%	1
R150	J707385P102	RES MFLM 1/8W 1K0 5%	1
R151	J707385P683	RES MFLM 1/8W 68K 5%	1
R152	J707385P104	RES MFLM 1/8W 100K 5%	1
R153	J707385P472	RES MFLM 1/8W 4K7 5%	1
R154	J707385P274	RES MFLM 1/8W 270K 5%	1
R155	J707385P682	RES MFLM 1/8W 6K8 5%	1
R156	J707385P102	RES MFLM 1/8W 1K0 5%	1
R157	J707385P100	RES MFLM 1/8W 10R 5%	1
R158	J707385P102	RES MFLM 1/8W 1K0 5%	1
R159	J707385P472	RES MFLM 1/8W 4K7 5%	1
R160	J707385P104	RES MFLM 1/8W 100K 5%	1
R161	J709725P1	RES THERM PTC 1K0	1
R162	J707385P220	RES MFLM 1/8W 22R 5%	1
R201	J707385P561	RES MFLM 1/8W 560R 5%	1
R202	J707385P271	RES MFLM 1/8W 270R 5%	1
R203	J707385P153	RES MFLM 1/8W 15K 5%	1
R204	J707385P153	RES MFLM 1/8W 15K 5%	1
R205	J707385P472	RES MFLM 1/8W 4K7 5%	1
R206	J707385P272	RES MFLM 1/8W 2K7 5%	1
R207	J707385P563	RES MFLM 1/8W 56K 5%	1

Pos	Code No.	Description	Qt
R208	J707385P563	RES MFLM 1/8W 56K 5%	1
R209	J707385P271	RES MFLM 1/8W 270R 5%	1
R210	J707385P331	RES MFLM 1/8W 330R 5%	1
R301	J707385P331	RES MFLM 1/8W 330R 5%	1
R302	J707385P392	RES MFLM 1/8W 3K9 5%	1
R303	J707385P104	RES MFLM 1/8W 100K 5%	1
R304	J707385P104	RES MFLM 1/8W 100K 5%	1
R306	J707385P272	RES MFLM 1/8W 2K7 5%	1
R307	J707385P681	RES MFLM 1/8W 680R 5%	1
R308	J707385P470	RES MFLM 1/8W 47R 5%	1
R309	J707385P270	RES MFLM 1/8W 27R 5%	1
R310	J707385P104	RES MFLM 1/8W 100K 5%	1
R311	J707385P101	RES MFLM 1/8W 100R 5%	1
R312	J707385P104	RES MFLM 1/8W 100K 5%	1
R313	J707385P123	RES MFLM 1/8W 12K 5%	1
R314	J707385P104	RES MFLM 1/8W 100K 5%	1
R315	J707385P822	RES MFLM 1/8W 8K2 5%	1
R316	J707385P104	RES MFLM 1/8W 100K 5%	1
R317	J707385P471	RES MFLM 1/8W 470R 5%	1
R318	J707385P100	RES MFLM 1/8W 10R 5%	1
R319	J707385P101	RES MFLM 1/8W 100R 5%	1
R320	J707385P222	RES MFLM 1/8W 2K2 5%	1
R321	J707385P270	RES MFLM 1/8W 27R 5%	1
R322	J707385P471	RES MFLM 1/8W 470R 5%	1
R323	J707385P104	RES MFLM 1/8W 100K 5%	1
R324	J707385P104	RES MFLM 1/8W 100K 5%	1
R325	J707385P100	RES MFLM 1/8W 10R 5%	1
R327	J707385P123	RES MFLM 1/8W 12K 5%	1
R328	J707385P332	RES MFLM 1/8W 3K3 5%	1
R329	J707385P102	RES MFLM 1/8W 1K0 5%	1
R401	J707385P390	RES MFLM 1/8W 39R 5%	1
R402	J707385P100	RES MFLM 1/8W 10R 5%	1
R403	J707385P222	RES MFLM 1/8W 2K2 5%	1
R404	J707385P472	RES MFLM 1/8W 4K7 5%	1
R405	J707385P100	RES MFLM 1/8W 10R 5%	1
R406	J707385P820	RES MFLM 1/8W 82R 5%	1
R407	J707385P470	RES MFLM 1/8W 47R 5%	1
R408	J707385P470	RES MFLM 1/8W 47R 5%	1
R409	J707385P332	RES MFLM 1/8W 3K3 5%	1
R410	J707385P471	RES MFLM 1/8W 470R 5%	1
R411	J707385P123	RES MFLM 1/8W 12K 5%	1
R412	J707385P472	RES MFLM 1/8W 4K7 5%	1
R413	J707385P102	RES MFLM 1/8W 1K0 5%	1
R414	J707385P332	RES MFLM 1/8W 3K3 5%	1
R415	J707385P222	RES MFLM 1/8W 2K2 5%	1
R416	J707385P562	RES MFLM 1/8W 5K6 5%	1
R417	J707385P103	RES MFLM 1/8W 10K 5%	1
R418	J707385P153	RES MFLM 1/8W 15K 5%	1
R419	J707385P182	RES MFLM 1/8W 1K8 5%	1
R420	J707385P182	RES MFLM 1/8W 1K8 5%	1
R421	J707385P182	RES MFLM 1/8W 1K8 5%	1
R422	J707385P473	RES MFLM 1/8W 47K 5%	1
R423	J707385P153	RES MFLM 1/8W 15K 5%	1
R424	J708538P5	RES VAR CERM 10K 20%	1
R425	J707385P153	RES MFLM 1/8W 15K 5% ■ G1/G2/G4/G5	1
R425	J707385P272	RES MFLM 1/8W 2K7 5% ■ G3/G6	1

Pos	Code No.	Description	Qt
R426	J707385P563	RES MFLM 1/8W 56K 5% * G1/G2/G4/G5	1
R426	J707385P473	RES MFLM 1/8W 47K 5% * G3/G6	1
R427	J707385P473	RES MFLM 1/8W 47K 5% * G3/G6	1
R427	J707385P393	RES MFLM 1/8W 39K 5% * G1/G2/G4/G5	1
R428	J707385P273	RES MFLM 1/8W 27K 5% * G1/G2/G4/G5	1
R428	J707385P563	RES MFLM 1/8W 56K 5% * G3/G6	1
R429	J707385P104	RES MFLM 1/8W 100K 5%	1
R430	J709328P447	RES MFLM 1/8W 301K 1% G1/G2/G4/G5	1
R430	J707385P334	RES MFLM 1/8W 330K 5% G3/G6	1
R431	J707385P473	RES MFLM 1/8W 47K 5%	1
R432	J707385P473	RES MFLM 1/8W 47K 5%	1
R433	J707385P271	RES MFLM 1/8W 270R 5%	1
R434	J707385P102	RES MFLM 1/8W 1K0 5%	1
R435	J706147P3	RES THERM PTC 250R 25%	1
R436	J707385P392	RES MFLM 1/8W 3K9 5%	1
R437	J707406P7	RES THERM NTC 220R 10%	1
R438	J707385P222	RES MFLM 1/8W 2K2 5%	1
R439	J707385P392	RES MFLM 1/8W 3K9 5%	1
R440	J707385P392	RES MFLM 1/8W 3K9 5%	1
R441	J707385P101	RES MFLM 1/8W 100R 5%	1
R442	J708538P6	RES VAR CERM 20K 20%	1
R444	J707385P473	RES MFLM 1/8W 47K 5%	1
R445	J707385P273	RES MFLM 1/8W 27K 5%	1
R446	J707385P224	RES MFLM 1/8W 220K 5%	1
R447	J707385P392	RES MFLM 1/8W 3K9 5%	1
R448	J707385P101	RES MFLM 1/8W 100R 5%	1
R449	J707385P470	RES MFLM 1/8W 47R 5%	1
R450	J707385P103	RES MFLM 1/8W 10K 5%	1
R452	J707385P332	RES MFLM 1/8W 3K3 5%	1
R501	J707385P821	RES MFLM 1/8W 820R 5%	1
R502	J707385P821	RES MFLM 1/8W 820R 5%	1
R504	J707385P104	RES MFLM 1/8W 100K 5%	1
R505	J707385P104	RES MFLM 1/8W 100K 5%	1
R508	J707385P103	RES MFLM 1/8W 10K 5%	1
R509	J707385P151	RES MFLM 1/8W 150R 5%	1
R510	J707385P103	RES MFLM 1/8W 10K 5%	1
R512	J707385P561	RES MFLM 1/8W 560R 5%	1
R513	J707385P272	RES MFLM 1/8W 2K7 5%	1
R514	J707385P682	RES MFLM 1/8W 6K8 5%	1
R515	J707385P221	RES MFLM 1/8W 220R 5%	1
R516	J707385P221	RES MFLM 1/8W 220R 5%	1
R517	J707385P101	RES MFLM 1/8W 100R 5%	1
R518	J707385P100	RES MFLM 1/8W 10R 5%	1
R529	J707385P392	RES MFLM 1/8W 3K9 5%	1
R601	J706035P52	RES DEPC 0.1W 180K 5%	1
R602	J707385P122	RES MFLM 1/8W 1K2 5%	1
R603	J707385P122	RES MFLM 1/8W 1K2 5%	1
R605	J707385P104	RES MFLM 1/8W 100K 5%	1
R606	J707385P104	RES MFLM 1/8W 100K 5%	1
R607	J707385P561	RES MFLM 1/8W 560R 5%	1
R608	J707385P682	RES MFLM 1/8W 6K8 5%	1

Pos	Code No.	Description	Qt
R609	J707385P332	RES MFLM 1/8W 3K3 5%	1
R610	J707385P331	RES MFLM 1/8W 330R 5%	1
R611	J707385P151	RES MFLM 1/8W 150R 5%	1
R612	J707385P102	RES MFLM 1/8W 1K0 5%	1
R613	J707385P101	RES MFLM 1/8W 100R 5%	1
R614	J707385P272	RES MFLM 1/8W 2K7 5%	1
R615	J707385P682	RES MFLM 1/8W 6K8 5%	1
R616	J707385P181	RES MFLM 1/8W 180R 5%	1
R617	J707385P563	RES MFLM 1/8W 56K 5%	1
R618	J707385P683	RES MFLM 1/8W 68K 5%	1
R619	J707385P104	RES MFLM 1/8W 100K 5%	1
R620	J707385P102	RES MFLM 1/8W 1K0 5%	1
R621	J707385P331	RES MFLM 1/8W 330R 5%	1
R622	J707385P681	RES MFLM 1/8W 680R 5%	1
R623	J707385P224	RES MFLM 1/8W 220K 5%	1
R624	J707385P223	RES MFLM 1/8W 22K 5%	1
R625	J707385P101	RES MFLM 1/8W 100R 5%	1
R626	J707385P100	RES MFLM 1/8W 10R 5%	1
R627	J707385P103	RES MFLM 1/8W 10K 5%	1
R628	J707385P224	RES MFLM 1/8W 220K 5%	1
R629	J707385P124	RES MFLM 1/8W 120K 5%	1
R630	J707385P100	RES MFLM 1/8W 10R 5%	1
R631	J707385P684	RES MFLM 1/8W 680K 5%	1
R632	J707385P223	RES MFLM 1/8W 22K 5%	1
R633	J707385P824	RES MFLM 1/8W 820K 5%	1
R634	J707385P123	RES MFLM 1/8W 12K 5%	1
R635	J707385P102	RES MFLM 1/8W 1K0 5%	1
R636	J707385P332	RES MFLM 1/8W 3K3 5%	1
R637	J707385P181	RES MFLM 1/8W 180R 5%	1
R638	J707385P474	RES MFLM 1/8W 470K 5%	1
R639	J707385P333	RES MFLM 1/8W 33K 5%	1
R640	J707385P105	RES MFLM 1/8W 1M0 10%	1
R641	J707385P184	RES MFLM 1/8W 180K 5%	1
R642	J707385P184	RES MFLM 1/8W 180K 5%	1
R643	J707385P105	RES MFLM 1/8W 1M0 10%	1
R644	J707385P473	RES MFLM 1/8W 47K 5%	1
R645	J707385P153	RES MFLM 1/8W 15K 5%	1
R646	J707385P393	RES MFLM 1/8W 39K 5%	1
R647	J707385P333	RES MFLM 1/8W 33K 5%	1
R649	J707385P473	RES MFLM 1/8W 47K 5%	1
R650	J707385P562	RES MFLM 1/8W 5K6 5%	1
R651	J707385P473	RES MFLM 1/8W 47K 5%	1
R652	J707385P223	RES MFLM 1/8W 22K 5%	1
R653	J707385P823	RES MFLM 1/8W 82K 5%	1
R654	J707385P153	RES MFLM 1/8W 15K 5%	1
R655	J707385P183	RES MFLM 1/8W 18K 5%	1
R656	J707385P393	RES MFLM 1/8W 39K 5%	1
R657	J707385P823	RES MFLM 1/8W 82K 5%	1
R658	J707385P154	RES MFLM 1/8W 150K 5%	1
R659	J707385P223	RES MFLM 1/8W 22K 5%	1
R660	J707385P333	RES MFLM 1/8W 33K 5%	1
R661	J707385P473	RES MFLM 1/8W 47K 5%	1
R662	J707385P473	RES MFLM 1/8W 47K 5%	1
R663	J708538P6	RES VAR CERM 20K 20%	1
R664	J707385P473	RES MFLM 1/8W 47K 5%	1
R665	J707385P824	RES MFLM 1/8W 820K 5%	1
R666	J707385P124	RES MFLM 1/8W 120K 5%	1
R667	J707385P124	RES MFLM 1/8W 120K 5%	1
R668	J707385P122	RES MFLM 1/8W 1K2 5%	1

PARTS LIST FOR RADIO FREQUENCY BOARD RF633X : M905892GX BD REV. 2/S

Pos	Code No.	Description	Qt
R669	J707385P221	RES MFLM 1/8W 220R 5%	1
R670	J707385P103	RES MFLM 1/8W 10K 5%	1
R671	J707385P562	RES MFLM 1/8W 5K6 5%	1
R672	J707385P822	RES MFLM 1/8W 8K2 5%	1
R673	J707385P822	RES MFLM 1/8W 8K2 5%	1
R674	J707385P101	RES MFLM 1/8W 100R 5%	1
R675	J708538P5	RES VAR CERM 10K 20%	1
R676	J707385P562	RES MFLM 1/8W 5K6 5%	1
R677	J708538P5	RES VAR CERM 10K 20%	1
R678	J707385P470	RES MFLM 1/8W 47R 5%	1
R679	J707385P821	RES MFLM 1/8W 820R 5%	1
R680	J708538P7	RES VAR CERM 50K 20%	1
R681	J707385P223	RES MFLM 1/8W 22K 5%	1
R682	J707385P152	RES MFLM 1/8W 1K5 5%	1
R683	J707385P223	RES MFLM 1/8W 22K 5%	1
R684	J707385P183	RES MFLM 1/8W 18K 5%	1
R685	J707385P183	RES MFLM 1/8W 18K 5%	1
R686	J707385P103	RES MFLM 1/8W 10K 5%	1
R687	J707385P103	RES MFLM 1/8W 10K 5%	1
R689	J707385P105	RES MFLM 1/8W 1M0 10%	1
R690	J707385P124	RES MFLM 1/8W 120K 5%	1
R691	J707385P273	RES MFLM 1/8W 27K 5%	1
R692	J707385P223	RES MFLM 1/8W 22K 5%	1
R693	J707385P105	RES MFLM 1/8W 1M0 10%	1
R694	J707385P223	RES MFLM 1/8W 22K 5%	1
R695	J707385P105	RES MFLM 1/8W 1M0 10%	1
R696	J707385P223	RES MFLM 1/8W 22K 5%	1
R697	J707385P105	RES MFLM 1/8W 1M0 10%	1
R698	J707385P103	RES MFLM 1/8W 10K 5%	1
R699	J707385P392	RES MFLM 1/8W 3K9 5%	1
R700	J707385P273	RES MFLM 1/8W 27K 5%	1
R702	A701250P420	RES MFLM 1/4W 158K 1%	1
R703	A701250P178	RES MFLM 1/4W 634R 1%	1
R704	A701250P342	RES MFLM 1/4W 26K7 1%	1
R707	J707385P104	RES MFLM 1/8W 100K 5%	1
R708	J707385P105	RES MFLM 1/8W 1M0 10%	1
R709	J707385P181	RES MFLM 1/8W 180R 5%	1
R710	J707385P101	RES MFLM 1/8W 100R 5%	1
R711	J707385P223	RES MFLM 1/8W 22K 5%	1
R712	J707385P154	RES MFLM 1/8W 150K 5%	1
R713	J707385P821	RES MFLM 1/8W 820R 5%	1
R714	J707385P104	RES MFLM 1/8W 100K 5%	1
R715	J707385P563	RES MFLM 1/8W 56K 5%	1
U100	J708165P2	IC LIN OP-AMP 324	1
U201	J708333P1	IC LIN VR,FIX 4785	1
U401	J707449P1	IC LIN IF-AMP 3357	1
U402	M905766G1	INT CKT SQ 4002 G1/ 4	1
U402	M905766G2	INT CKT SQ 4003 G3/ 6	1
U402	M905766G3	INT CKT SQ 4004 G2/ 5	1
U601	J707859P1	IC LIN OP-AMP 204	1
U602	J707859P1	IC LIN OP-AMP 204	1
U604	J707859P1	IC LIN OP-AMP 204	1
U606	J707243P1	IC DIG REG 4094	1
U607	J707374P1	IC PLL PRESC 8793	1
U608	B800902P1	IC PLL SYN CUSTOM DES	1
U609	J707859P1	IC LIN OP-AMP 204	1
U610	J708503P2	IC LIN CMPAR LM 339	1
U615	J708621P2	CPLR OPTO PC 827	1
U616	J708503P2	IC LIN CMPAR LM 339	1

Pos	Code No.	Description	Qt
W003	J707256P1	COIL FIX	1
W004	J707256P1	COIL FIX	1
W005	J708717P1	STRAP	1
W006	J708716P1	STRAP	1
Y401	J707309P1	CRYSTAL UNIT 20.94 0MHZ	1
Y701	J707567P19	CRYSTAL UNIT 7.40 0MHZ	1
Z401	J707310P1	FLTR CRY 21.4 +/-7.5 KHZ G1/G4	1
Z401	J707310P2	FLTR CRY 21.4 +/-6.0 KHZ G2/G5	1
Z401	J707310P3	FLTR CRY 21.4 +/-3.7 KHZ G3/G6	1
Z402	J707446P1	FLTR CER 455K +/-10K Z G1/G4	1
Z402	J707446P3	FLTR CER 455K +/-7.5 HZ G2/G5	1
Z402	J707446P1	FLTR CER 455K +/-4.5 HZ G3/G6	1
Z403	J707446P1	FLTR CER 455K +/-10K Z G1/G4	1
Z403	J707446P3	FLTR CER 455K +/-7.5 HZ G2/G5	1
Z403	J707446P1	FLTR CER 455K +/-4.5 HZ G3/G6	1
	M905893P1R2	BD PW	1
		NON REFERENCED ITEMS:	
	J708561P3	COIL FIXED	3
	K805776P1	CASTING HEAT SINK	1
	K805569G2	SHIELD METALLIZED	1
	J706281P7	CORE SCREW FERR U 25	8
	J706804P2	WASH INS CRYS FOR HC-18/U	4

PARTS LIST FOR RADIO FREQUENCY BOARD RF633X : M905892GX BD REV. 2

Pos	Code No.	Description	Qt
		COMPONENTS REVISED SINCE LAST EDITION ARE MARKED ✱	
----	----------	----------	---
			REV
	M906892G1	RF6332S25 CH. SPAC. 25kHz/25W OUT	P
	M906892G2	RF6333S25 CH. SPAC. 20kHz/25W OUT	R
	M906892G3	RF6334S25 CH. SPAC. 12.5kHz/25W OUT	N
	M906892G4	RF6332S6 CH. SPAC. 25kHz/25W OUT	P
	M906892G5	RF6333S6 CH. SPAC. 20kHz/25W OUT	R
	M906892G6	RF6334S6 CH. SPAC. 12.5kHz/25W OUT	N
----	----------	----------	---
C100	J707809P13	CAP CER NPO 10P 5%	1
C101	21R13741M25	CAP CER CL2 1N5 10%	1
C102	21R13741M29	CAP CER CL2 2N2 10%	1
C103	21R13740A59	CAP CER NPO 150P 5%	1
C104	J707809P15	CAP CER NPO 15P 5%	1
C105	J707809P17	CAP CER NPO 22P 5%	1
C106	J707809P15	CAP CER NPO 15P 5%	1
C107	21R13741M29	CAP CER CL2 2N2 10%	1
C108	21R13741M29	CAP CER CL2 2N2 10%	1
C109	J707809P25	CAP CER NPO 100P 5%	1
C110	J707809P23	CAP CER NPO 68P 5% G1/G2/G3	1
C110	J707809P17	CAP CER NPO 22P 5% G4/G5/G6	1
C111	21R13741M29	CAP CER CL2 2N2 10%	1
C112	21R13741M45	CAP CER CL2 10N 10%	1
C113	21R13741M29	CAP CER CL2 2N2 10%	1
C114	21R13741M29	CAP CER CL2 2N2 10%	1
C115	J707809P27	CAP CER NPO 150P 5% G1/G2/G3	1
C115	J707809P23	CAP CER NPO 68P 5% G4/G5/G6	1
C116	J707809P27	CAP CER NPO 150P 5% G1/G2/G3	1
C116	J707809P24	CAP CER NPO 82P 5% G4/G5/G6	1
C117	J707809P27	CAP CER NPO 150P 5% G4/G5/G6	1
C118	J707809P27	CAP CER NPO 150P 5% G4/G5/G6	1
C119	J707809P27	CAP CER NPO 150P 5% G4/G5/G6	1
C120	J707353P6	CAP ELECT 4U7 25V	1
C121	21R13741M45	CAP CER CL2 10N 10%	1
C122	21R13741M29	CAP CER CL2 2N2 10%	1
C123	21R13741M45	CAP CER CL2 10N 10%	1
C124	21R13741M29	CAP CER CL2 2N2 10%	1
C125	A700006P40	CAP MICA 170P 5% G1/G2/G3	1
C125	A700006P38	CAP MICA 150P 5% G4/G5/G6	1
C126	J709524P59	CAP CER RF 270P 5% G1/G2/G3	1
C126	J709524P49	CAP CER RF 100P 5% G4/G5/G6	1
C127	J709524P51	CAP CER RF 120P 5% G1/G2/G3	1
C127	J709524P45	CAP CER RF 68P 5% G4/G5/G6	1
C128	A700006P35	CAP MICA 110P 5% G1/G2/G3	1
C128	A700006P26	CAP MICA 47P 5% G4/G5/G6	1
C130	J707809P14	CAP CER NPO 12P 5%	1
C131	J707809P13	CAP CER NPO 10P 5%	1
C132	J707809P12	CAP CER NPO 8P2 .25P	1
C133	J707809P13	CAP CER NPO 10P 5%	1
C134	J707353P6	CAP ELECT 4U7 ,25V	1
C136	21R13741C05	CAP CER CL2 33N 5%	1
C137	21R13741M29	CAP CER CL2 2N2 10%	1
C138	21R13741M29	CAP CER CL2 2N2 10%	1
C139	21R13741M29	CAP CER CL2 2N2 10%	1
C140	21R13741M29	CAP CER CL2 2N2 10%	1
C141	21R13741M29	CAP CER CL2 2N2 10%	1
C142	A700006P14	CAP MICA 18P 5%	1
C143	A700006P26	CAP MICA 47P 5%	1
C144	A700006P26	CAP MICA 47P 5%	1
C145	A700006P18	CAP MICA 24P 5%	1
C146	21R13741M29	CAP CER CL2 2N2 10%	1
C147	21R13741M29	CAP CER CL2 2N2 10%	1
C148	21R13741M29	CAP CER CL2 2N2 10%	1
C149	21R13741M29	CAP CER CL2 2N2 10%	1
C150	J707809P10	CAP CER NPO 5P6 .25P G1/G2/G3	1
C150	J707809P12	CAP CER NPO 8P2 .25P G4/G5/G6	1
C151	J707809P10	CAP CER NPO 5P6 .25P G1/G2/G3	1
C151	J707809P12	CAP CER NPO 8P2 .25P G4/G5/G6	1
C152	21R13741M29	CAP CER CL2 2N2 10%	1
C153	21R13741M29	CAP CER CL2 2N2 10%	1
C154	21R13741M29	CAP CER CL2 2N2 10%	1
C155	21R13741M29	CAP CER CL2 2N2 10%	1
C156	J707353P3	CAP ELECT 0U47 ,50V	1
C157	21R13741M29	CAP CER CL2 2N2 10%	1
C158	21R13741M29	CAP CER CL2 2N2 10%	1
C159	21R13741M45	CAP CER CL2 10N 10%	1
C160	21R13740A71	CAP CER NPO 470P 5%	1
C161	21R13741M29	CAP CER CL2 2N2 10%	1
C162	21R13741M45	CAP CER CL2 10N 10%	1
C163	21R13741C05	CAP CER CL2 33N 5%	1
C164	21R13741M29	CAP CER CL2 2N2 10%	1
C165	J707809P16	CAP CER NPO 18P 5% G1/G2/G3	1
C165	J707809P17	CAP CER NPO 22P 5% G4/G5/G6	1
C166	21R13741M21	CAP CER CL2 1N0 10%	1
C167	J707412P13	CAP PYES 470N 10%	1
C168	21R13741M29	CAP CER CL2 2N2 10%	1

Pos	Code No.	Description	Qt
C169	J707809P1	CAP CER NPO 1P0 .25P	1
C170	21R13741M45	CAP CER CL2 10N 10%	1
C171	21R13741M45	CAP CER CL2 10N 10%	1
C172	21R13741M45	CAP CER CL2 10N 10%	1
C201	21R13741C17	CAP CER CL2 100N 5%	1
C202	J707444P8	CAP TA SOL 22U 16V	1
C203	J706005P12	CAP ELECT 47U 40V	1
C204	21R13741M29	CAP CER CL2 2N2 10%	1
C205	J707412P9	CAP PYES 100N 10%	1
C206	J707444P4	CAP TA SOL 1U 35V	1
C301	21R13740A63	CAP CER NPO 220P 5%	1
C302	21R13741M21	CAP CER CL2 1N0 10%	1
C304	21R13740A21	CAP CER NPO 5P6 .25P	1
C305	21R13740A39	CAP CER NPO 27P 5%	1
C306	J707483P4	CAP PHEN 0P56 5%	1
C307	21R13741M21	CAP CER CL2 1N0 10%	1
C309	21R13740A39	CAP CER NPO 27P 5%	1
C310	21R13741M21	CAP CER CL2 1N0 10%	1
C311	21R13740A21	CAP CER NPO 5P6 .25P	1
C312	21R13740C19	CAP CER NPO 1N2 5%	1
C315	21R13740A21	CAP CER NPO 5P6 .25P	1
C317	J707444P2	CAP TA SOL 0U22 35V	1
C318	21R13741M21	CAP CER CL2 1N0 10%	1
C319	21R13740A39	CAP CER NPO 27P 5%	1
C320	21R13741M21	CAP CER CL2 1N0 10%	1
C322	J707483P7	CAP PHEN 1P00 5%	1
C323	J707483P6	CAP PHEN 0P82 5%	1
C324	21R13740A15	CAP CER NPO 3P3 .25P	1
C325	21R13741M21	CAP CER CL2 1N0 10%	1
C326	21R13740A39	CAP CER NPO 27P 5%	1
C328	21R13740A39	CAP CER NPO 27P 5%	1
C331	J707483P6	CAP PHEN 0P82 5%	1
C332	21R13740A39	CAP CER NPO 27P 5%	1
C333	21R13740A15	CAP CER NPO 3P3 .25P	1
C334	21R13740A17	CAP CER NPO 3P9 .25P	1
C335	21R13741M21	CAP CER CL2 1N0 10%	1
C338	21R13740A41	CAP CER NPO 33P 5%	1
C339	21R13741M21	CAP CER CL2 1N0 10%	1
C340	21R13741A33	CAP CER CL2 3N3 5%	1
C345	21R13741M21	CAP CER CL2 1N0 10%	1
C347	21R13741M21	CAP CER CL2 1N0 10%	1
C348	21R13741M21	CAP CER CL2 1N0 10%	1
C350	21R13740A21	CAP CER NPO 5P6 .25P	1
C351	21R13740A35	CAP CER NPO 18P 5%	1
C353	J707483P8	CAP PHEN 1P20 5%	1
C354	21R13740A35	CAP CER NPO 18P 5%	1
C355	21R13740A19	CAP CER NPO 4P7 .25P	1
C356	21R13741M21	CAP CER CL2 1N0 10%	1
C357	21R13740A03	CAP CER NPO 1P0 .25P	1
C358	21R13740A03	CAP CER NPO 1P0 .25P	1
C359	21R13741M21	CAP CER CL2 1N0 10%	1
C401	21R13741A33	CAP CER CL2 3N3 5%	1
C402	21R13741A33	CAP CER CL2 3N3 5%	1
C403	21R13741A33	CAP CER CL2 3N3 5%	1
C404	21R13740A41	CAP CER NPO 33P 5%	1
C405	21R13741C17	CAP CER CL2 100N 5%	1
C406	21R13740A21	CAP CER NPO 5P6 .25P	1
C407	21R13740A39	CAP CER NPO 27P 5%	1
C408	21R13741M21	CAP CER CL2 1N0 10%	1

Pos	Code No.	Description	Qt
C409	21R13741A33	CAP CER CL2 3N3 5%	1
C410	J707444P8	CAP TA SOL 22U 16V	1
C411	21R13741C17	CAP CER CL2 100N 5%	1
C412	21R13741C17	CAP CER CL2 100N 5%	1
C413	21R13740A41	CAP CER NPO 33P 5%	1
C414	21R13741A33	CAP CER CL2 3N3 5%	1
C415	21R13740A63	CAP CER NPO 220P 5%	1
C416	21R13740A57	CAP CER NPO 120P 5%	1
C417	21R13740A39	CAP CER NPO 27P 5%	1
C418	21R13741M45	CAP CER CL2 10N 10%	1
C419	21R13741C17	CAP CER CL2 100N 5%	1
C420	21R13741M45	CAP CER CL2 10N 10%	1
C421	21R13741C17	CAP CER CL2 100N 5%	1
C422	21R13741C17	CAP CER CL2 100N 5%	1
C423	21R13740A29	CAP CER NPO 10P 5%	1
C424	21R13741A33	CAP CER CL2 3N3 5%	1
C425	J707412P13	CAP PYES 470N 10%	1
C426	21R13740C25	CAP CER NPO 2N2 5%	1
C427	21R13740A67	CAP CER NPO 330P 5%	1
C428	21R13740A65	CAP CER NPO 270P 5%	1
C429	21R13741M45	CAP CER CL2 10N 10%	1
C430	J707444P8	CAP TA SOL 22U 16V	1
C431	J707444P8	CAP TA SOL 22U 16V	1
C432	21R13741C17	CAP CER CL2 100N 5%	1
C433	21R13741C17	CAP CER CL2 100N 5%	1
C434	21R13741A33	CAP CER CL2 3N3 5%	1
C435	21R13740A03	CAP CER NPO 1P0 .25P	1
C436	21R13741C17	CAP CER CL2 100N 5%	1
C437	21R13740A46	CAP CER NPO 47P 5%	1
C438	21R13741M45	CAP CER CL2 10N 10%	1
C501	J707412P11	CAP PYES 220N 10%	1
C502	J707412P11	CAP PYES 220N 10%	1
C504	A700235P16	CAP CER N150 18P 5%	1
C505	A700235P11	CAP CER N150 6P8 .25P	1
C506	A700235P20	CAP CER N150 39P 5%	1
C507	A700235P19	CAP CER N150 33P 5%	1
C508	A700235P25	CAP CER N150 100P 5%	1
C509	21R13740A19	CAP CER NPO 4P7 .25P	1
C512	21R13740A17	CAP CER NPO 3P9 .25P	1
C513	21R13741A09	CAP CER CL2 330P 5%	1
C514	21R13741M25	CAP CER CL2 1N5 10%	1
C517	J707444P6	CAP TA SOL 4U7 35V	1
C518	21R13740A05	CAP CER NPO 1P2 .25P	1
C519	21R13741M25	CAP CER CL2 1N5 10%	1
C520	21R13740A63	CAP CER NPO 220P 5%	1
C521	21R13740A37	CAP CER NPO 22P 5%	1
C522	21R13741M25	CAP CER CL2 1N5 10%	1
C523	21R13740A11	CAP CER NPO 2P2 .25P	1
C524	21R13741M13	CAP CER CL2 470P 10%	1
C525	21R13741M13	CAP CER CL2 470P 10%	1
C527	21R13741M13	CAP CER CL2 470P 10%	1
C528	21R13741C17	CAP CER CL2 100N 5%	1
C540	21R13741M13	CAP CER CL2 470P 10%	1
C541	21R13741M13	CAP CER CL2 470P 10%	1
C543	21R13741M13	CAP CER CL2 470P 10%	1
C544	21R13741M13	CAP CER CL2 470P 10%	1
C545	21R13740A55	CAP CER NPO 100P 5%	1
C601	J707412P11	CAP PYES 220N 10%	1
C602	J707412P11	CAP PYES 220N 10%	1

PARTS LIST FOR RADIO FREQUENCY BOARD RF633X : M905892GX BD REV. 2

Pos	Code No.	Description	Qt
C603	21R13741C17	CAP CER CL2 100N 5%	1
C604	A700235P13	CAP CER N150 10P 5%	1
C605	A700235P10	CAP CER N150 5P6 .25P	1
C606	A700235P38	CAP CER N150 16P 5%	1
C607	A700235P11	CAP CER N150 6P8 .25P	1
C608	A700233P9	CAP CER CL2 2N2 20%	1
C610	21R13740A55	CAP CER NP0 100P 5%	1
C611	21R13740A13	CAP CER NP0 2P7 .25P	1
C612	21R13741M25	CAP CER CL2 1N5 10%	1
C613	J707444P6	CAP TA SOL 4U7 35V	1
C614	21R13741M25	CAP CER CL2 1N5 10%	1
C615	21R13741M37	CAP CER CL2 4N7 10%	1
C616	21R13741M25	CAP CER CL2 1N5 10%	1
C617	21R13740A49	CAP CER NP0 56P 5%	1
C618	21R13740A03	CAP CER NP0 1P0 .25P	1
C619	21R13741M25	CAP CER CL2 1N5 10%	1
C620	21R13740A55	CAP CER NP0 100P 5%	1
C621	21R13740A33	CAP CER NP0 15P 5%	1
C622	21R13740A07	CAP CER NP0 1P5 .25P	1
C623	21R13741C17	CAP CER CL2 100N 5%	1
C624	21R13740A55	CAP CER NP0 100P 5%	1
C625	21R13741M25	CAP CER CL2 1N5 10%	1
C626	21R13741M21	CAP CER CL2 1N0 10%	1
C627	21R13741C17	CAP CER CL2 100N 5%	1
C628	21R13740A15	CAP CER NP0 3P3 .25P	1
C629	21R13740A59	CAP CER NP0 150P 5%	1
C630	21R13741C17	CAP CER CL2 100N 5%	1
C631	21R13741M25	CAP CER CL2 1N5 10%	1
C632	J707444P6	CAP TA SOL 4U7 35V	1
C633	J707444P17	CAP TA SOL 47U 10V	1
C634	21R13741C17	CAP CER CL2 100N 5%	1
C635	21R13741M05	CAP CER CL2 220P 10%	1
C636	J707444P17	CAP TA SOL 47U 10V	1
C637	21R13741C17	CAP CER CL2 100N 5%	1
C638	21R13741M21	CAP CER CL2 1N0 10%	1
C639	21R13741A33	CAP CER CL2 3N3 5%	1
C640	J707412P8	CAP PYES 68N 10%	1
C641	J707412P13	CAP PYES 470N 10%	1
C642	J707412P13	CAP PYES 470N 10%	1
C643	21R13741C17	CAP CER CL2 100N 5%	1
C644	21R13740A13	CAP CER NP0 2P7 .25P	1
C646	21R13740A57	CAP CER NP0 120P 5%	1
C647	21R13740A29	CAP CER NP0 10P 5%	1
C652	21R13741C09	CAP CER CL2 47N 5%	1
C653	J707444P6	CAP TA SOL 4U7 35V	1
C654	A700005P9	CAP PYES 22N 10%	1
C656	21R13741M13	CAP CER CL2 470P 10%	1
C657	21R13741M13	CAP CER CL2 470P 10%	1
C659	21R13741M21	CAP CER CL2 1N0 10%	1
C660	21R13741M45	CAP CER CL2 10N 10%	1
C666	21R13741M13	CAP CER CL2 470P 10%	1
C667	21R13741M13	CAP CER CL2 470P 10%	1
C701	21R13740A37	CAP CER NP0 22P 5%	1
C702	J708702P22	CAP CER N750 56P 5%	1
C703	21R13740A63	CAP CER NP0 220P 5%	1
C705	21R13741M21	CAP CER CL2 1N0 10%	1
C706	21R13741M45	CAP CER CL2 10N 10%	1
C707	21R13740A21	CAP CER NP0 5P6 .25P	1
C708	21R13741M45	CAP CER CL2 10N 10%	1
C709	21R13741M45	CAP CER CL2 10N 10%	1
D100	A700047P3	DIO SI SIG 1N6263	1
D101	J706892P1	DIO SI PIN UM 940	1
D102	J706892P1	DIO SI PIN UM 940	1
D103	J707390P1	DIO SI SIG BAV 74	1
D300	J707928P2	DIO SI CAP BB 809	1
D301	J707928P2	DIO SI CAP BB 809	1
D302	J707928P2	DIO SI CAP BB 809	1
D303	J707928P2	DIO SI CAP BB 809	1
D304	J707928P2	DIO SI CAP BB 809	1
D305	J707928P2	DIO SI CAP BB 809	1
D306	J707928P2	DIO SI CAP BB 809	1
D307	J707928P2	DIO SI CAP BB 809	1
D401	A700025P8	DIO SI ZENR 6V8,5% 0.4W	1
D501	J707928P2	DIO SI CAP BB 809	1
D502	J707928P2	DIO SI CAP BB 809	1
D503	J707928P2	DIO SI CAP BB 809	1
D504	J707928P2	DIO SI CAP BB 809	1
D505	J707928P2	DIO SI CAP BB 809	1
D506	J707769P1	DIO SI CAP BBY 31	1
D601	J707928P2	DIO SI CAP BB 809	1
D602	J707928P2	DIO SI CAP BB 809	1
D603	J709536P1	DIO SI CAP MV 211	1
D604	J709536P1	DIO SI CAP MV 211	1
D605	J707389P1	DIO SI SIG BAV 99	1
D606	J708681P1	DIO SI SIG BAW 56	1
D607	J707390P1	DIO SI SIG BAV 74	1
D608	J707390P1	DIO SI SIG BAV 74	1
D610	J708681P1	DIO SI SIG BAW 56	1
D701	A700073P1	DIO SI CAP BB 409	1
D702	J707390P1	DIO SI SIG BAV 74	1
L100	K805653G9	COIL ASM 9 1/2T	1
L101	A700024P7	COIL RF FIX 0.33UH 10%	1
L102	A700024P3	COIL RF FIX 0.15UH 10%	1
L103	A700024P12	COIL RF FIX 0.82UH 10%	1
L104	K805653G2	COIL ASM 2 1/2T	1
L105	K805653G5	COIL ASM 5 1/2T G1/G2/G3	1
L105	K805653G8	COIL ASM 8 1/2T G4/G5/G6	1
L106	J707339G1	COIL FIX ASM	1
L107	K805653G4	COIL ASM 4 1/2T	1
L108	A700024P3	COIL RF FIX 0.15UH 10%	1
L109	J707256P2	COIL FIX	1
L110	J709287P1	CORE TOR FERR	1
L111	J707256P1	COIL FIX G1/G2/G3	1
L111	K805653G1	COIL ASM 1 1/2T G4/G5/G6	1
L113	A700024P3	COIL RF FIX 0.15UH 10%	1
L114	J709287P1	CORE TOR FERR	1
L115	J707256P2	COIL FIX	1
L116	J709287P1	CORE TOR FERR	1
L117	J709603P2	COIL G1/ 2/G3	1
L117	K805653G6	COIL ASM 6 1/2T G4/ 5/G6	1
L118	J709603P1	COIL G1/ 2/G3	1
L118	J707426P6	COIL FIX G4/ 5/G6	1
L121	A700024P18	COIL RF FIX 2.7UH 10%	1
L122	A700024P25	COIL RF FIX 10UH 10%	1

Pos	Code No.	Description	Qt
L123	A700024P25	COIL RF FIX 10UH 10%	1
L124	K805653G7	COIL ASM 7 1/2 T	1
L125	K805653G7	COIL ASM 7 1/2 T	1
L126	K805653G8	COIL ASM 8 1/2T	1
L127	A700024P25	COIL RF FIX 10UH 10%	1
L128	A700024P25	COIL RF FIX 10UH 10%	1
L301	J709099P8	COIL RF VAR 7-1/2	1
L302	J709099P15	COIL RF VAR 7-1/2 ,TAP	1
L303	J707486P11	COIL RF FIX 2.2UH 10%	1
L304	J709099P8	COIL RF VAR 7-1/2	1
L305	J707486P2	COIL RF FIX 3.3UH 10%	1
L306	J709099P8	COIL RF VAR 7-1/2	1
L308	J709099P8	COIL RF VAR 7-1/2	1
L310	J709099P9	COIL RF VAR 7-1/2 ,TAP	1
L312	J708428P1	COIL RF VAR 45 MHZ	1
L313	J709099P12	COIL RF VAR 5-1/2 ,TAP	1
L314	J709099P14	COIL RF VAR 5-1/2 ,TAP	1
L401	J707486P3	COIL RF FIX 6.8UH 10%	1
L403	K805570G6	COIL ASM	1
L405	J708428P1	COIL RF VAR 45 MHZ	1
L406	K805570G5	COIL ASM	1
L407	A700024P25	COIL RF FIX 10UH 10%	1
L408	J708428P1	COIL RF VAR 45 MHZ	1
L409	J707431P1	COIL RF VAR 455KHZ 25%	1
L410	J707431P1	COIL RF VAR 455KHZ 25%	1
L501	A700024P21	COIL RF FIX 4.7UH 10%	1
L502	A700024P21	COIL RF FIX 4.7UH 10%	1
L504	A700024P21	COIL RF FIX 4.7UH 10%	1
L505	L855671P2	COIL RADIO FREQUENCY	1
L506	A700024P21	COIL RF FIX 4.7UH 10%	1
L508	A700024P5	COIL RF FIX 0.22UH 10%	1
L601	A700024P21	COIL RF FIX 4.7UH 10%	1
L602	A700024P21	COIL RF FIX 4.7UH 10%	1
L604	A700024P21	COIL RF FIX 4.7UH 10%	1
L605	L855671P2	COIL RADIO FREQUENCY	1
L606	A700024P21	COIL RF FIX 4.7UH 10%	1
L607	A700024P4	COIL RF FIX 0.18UH 10%	1
L701	K805570G7	COIL ASM	1
L702	A700024P43	COIL RF FIX 330UH 10%	1
L703	A700024P27	COIL RF FIX 15UH 10%	1
P102	J707064P112	CONN PWB FEM 1 -CKT	1
P105	A701883P4	CONN PWB FEM RECP	1
Q100	J707388P1	TSTR NPN SI BFR 53	1
Q101	A701940P1	TSTR NPN SI RF-PWR 0.4W	1
Q102	J709517P1	TSTR NPN SI RF-PWR 3W	1
Q103	J709162P1	TSTR NPN SI RF-PWR 27W G1/G2/G3	1
Q103	J709163P1	TSTR NPN SI RF-PWR 10W G4/G5/G6	1
Q106	J707432P1	TSTR PNP SI BCX 18	1
Q107	J707386P1	TSTR NPN SI BCW 32	1
Q108	J708406P1	TSTR NPN SI BD 233	1
Q109	J707386P1	TSTR NPN SI BCW 32	1
Q201	J707435P1	TSTR PNP SI BC 369	1
Q202	J707386P1	TSTR NPN SI BCW 32	1
Q203	J707432P1	TSTR PNP SI BCX 18	1
Q204	J707386P1	TSTR NPN SI BCW 32	1
Q301	J706011P2	TSTR NPN SI BFR 91	1
Q302	J707817P1	TSTR JFET SI J 309	1

Pos	Code No.	Description	Qt
Q401	J707817P1	TSTR JFET SI J 309	1
Q402	J707817P1	TSTR JFET SI J 309	1
Q403	J707419P1	TSTR JFET SI BF511	1
Q404	J708418P1	TSTR NPN SI BFS 20	1
Q405	J708418P1	TSTR NPN SI BFS 20	1
Q406	J708418P1	TSTR NPN SI BFS 20	1
Q407	J707386P1	TSTR NPN SI BCW 32	1
Q408	J707387P1	TSTR PNP SI BCW 30	1
Q501	J707817P1	TSTR JFET SI J 309	1
Q502	J708318P1	TSTR PNP SI BFT 92	1
Q601	J707817P1	TSTR JFET SI J 309	1
Q603	J708318P1	TSTR PNP SI BFT 92	1
Q604	J707433P1	TSTR MFET SI BF 989	1
Q605	J707386P1	TSTR NPN SI BCW 32	1
Q612	J707386P1	TSTR NPN SI BCW 32	1
Q613	J707386P1	TSTR NPN SI BCW 32	1
Q701	J707419P1	TSTR JFET SI BF511	1
Q702	J707387P1	TSTR PNP SI BCW 30	1
R000	J707385P332	RES MFLM 1/8W 3K3 5%	1
R100	J707385P101	RES MFLM 1/8W 100R 5% G4/G5/G6	1
R101	J707385P470	RES MFLM 1/8W 47R 5%	1
R102	J707385P471	RES MFLM 1/8W 470R 5%	1
R103	J707385P390	RES MFLM 1/8W 39R 5%	1
R104	J707385P331	RES MFLM 1/8W 330R 5%	1
R105	J707385P122	RES MFLM 1/8W 1K2 5%	1
R106	J707385P100	RES MFLM 1/8W 10R 5%	1
R107	J707385P100	RES MFLM 1/8W 10R 5%	1
R108	J707385P560	RES MFLM 1/8W 56R 5%	1
R109	J707385P100	RES MFLM 1/8W 10R 5%	1
R110	J707385P100	RES MFLM 1/8W 10R 5% G1/G2/G3	1
R110	J707385P910	RES MFLM 1/8W 1R0 20% G4/G5/G6	1
R111	J707385P220	RES MFLM 1/8W 22R 5%	1
R112	J707385P947	RES MFLM 1/8W 4R7 20%	1
R113	J707385P100	RES MFLM 1/8W 10R 5%	1
R114	J707385P910	RES MFLM 1/8W 1R0 20% G1/G2/G3	1
R114	J707385P918	RES MFLM 1/8W 1R8 20% G4/G5/G6	1
R115	J707385P910	RES MFLM 1/8W 1R0 20% G1/G2/G3	1
R115	J707385P918	RES MFLM 1/8W 1R8 20% G4/G5/G6	1
R116	J707385P121	RES MFLM 1/8W 120R 5%	1
R117	J707385P220	RES MFLM 1/8W 22R 5%	1
R118	J707385P473	RES MFLM 1/8W 47K 5%	1
R119	J707385P820	RES MFLM 1/8W 82R 5%	1
R120	J707385P820	RES MFLM 1/8W 82R 5%	1
R121	J707385P333	RES MFLM 1/8W 33K 5%	1
R122	J707385P221	RES MFLM 1/8W 220R 5%	1
R123	J707385P221	RES MFLM 1/8W 220R 5%	1
R124	J707385P101	RES MFLM 1/8W 100R 5% G1/G2/G3	1
R124	J707385P221	RES MFLM 1/8W 220R 5% G4/G5/G6	1
R125	J707385P330	RES MFLM 1/8W 33R 5%	1
R126	J707385P330	RES MFLM 1/8W 33R 5%	1

PARTS LIST FOR RADIO FREQUENCY BOARD RF633X : M905892GX BD REV. 2

Pos	Code No.	Description	Qt
R127	J707385P330	RES MFLM 1/8W 33R 5%	1
R128	J707385P100	RES MFLM 1/8W 10R 5%	1
R129	J707385P121	RES MFLM 1/8W 120R 5% G1/G2/G3	1
R129	J707385P560	RES MFLM 1/8W 56R 5% G4/G5/G6	1
R130	J707385P121	RES MFLM 1/8W 120R 5% G1/G2/G3	1
R130	J707385P560	RES MFLM 1/8W 56R 5% G4/G5/G6	1
R131	J707385P392	RES MFLM 1/8W 3K9 5%	1
R132	J708538P9	RES VAR CERM 200K 20%	1
R133	J708538P4	RES VAR CERM 5K0 20%	1
R134	J707385P100	RES MFLM 1/8W 10R 5%	1
R135	J706147P2	RES THERM PTC 80R 25%	1
R136	J707385P682	RES MFLM 1/8W 6K8 5%	1
R137	J707385P223	RES MFLM 1/8W 22K 5%	1
R138	J707385P472	RES MFLM 1/8W 4K7 5%	1
R139	J707385P472	RES MFLM 1/8W 4K7 5%	1
R140	J707385P333	RES MFLM 1/8W 33K 5%	1
R141	J707385P333	RES MFLM 1/8W 33K 5%	1
R142	J707385P104	RES MFLM 1/8W 100K 5%	1
R143	J707385P222	RES MFLM 1/8W 2K2 5%	1
R144	J707385P222	RES MFLM 1/8W 2K2 5%	1
R145	J707385P223	RES MFLM 1/8W 22K 5%	1
R146	J707385P104	RES MFLM 1/8W 100K 5%	1
R147	J707385P104	RES MFLM 1/8W 100K 5%	1
R148	J707385P123	RES MFLM 1/8W 12K 5%	1
R149	J707385P472	RES MFLM 1/8W 4K7 5%	1
R150	J707385P102	RES MFLM 1/8W 1K0 5%	1
R151	J707385P683	RES MFLM 1/8W 68K 5%	1
R152	J707385P104	RES MFLM 1/8W 100K 5%	1
R153	J707385P472	RES MFLM 1/8W 4K7 5%	1
R154	J707385P274	RES MFLM 1/8W 270K 5%	1
R155	J707385P682	RES MFLM 1/8W 6K8 5%	1
R156	J707385P102	RES MFLM 1/8W 1K0 5%	1
R157	J707385P100	RES MFLM 1/8W 10R 5%	1
R158	J707385P102	RES MFLM 1/8W 1K0 5%	1
R159	J707385P472	RES MFLM 1/8W 4K7 5%	1
R160	J707385P104	RES MFLM 1/8W 100K 5%	1
R161	J709725P1	RES THERM PTC 1K0	1
R162	J707385P220	RES MFLM 1/8W 22R 5%	1
R201	J707385P561	RES MFLM 1/8W 560R 5%	1
R202	J707385P271	RES MFLM 1/8W 270R 5%	1
R203	J707385P153	RES MFLM 1/8W 15K 5%	1
R204	J707385P153	RES MFLM 1/8W 15K 5%	1
R205	J707385P472	RES MFLM 1/8W 4K7 5%	1
R206	J707385P272	RES MFLM 1/8W 2K7 5%	1
R207	J707385P563	RES MFLM 1/8W 56K 5%	1
R208	J707385P563	RES MFLM 1/8W 56K 5%	1
R209	J707385P271	RES MFLM 1/8W 270R 5%	1
R210	J707385P331	RES MFLM 1/8W 330R 5%	1
R301	J707385P331	RES MFLM 1/8W 330R 5%	1
R302	J707385P392	RES MFLM 1/8W 3K9 5%	1
R303	J707385P104	RES MFLM 1/8W 100K 5%	1
R304	J707385P104	RES MFLM 1/8W 100K 5%	1
R306	J707385P272	RES MFLM 1/8W 2K7 5%	1
R307	J707385P681	RES MFLM 1/8W 680R 5%	1
R308	J707385P470	RES MFLM 1/8W 47R 5%	1

Pos	Code No.	Description	Qt
R309	J707385P270	RES MFLM 1/8W 27R 5%	1
R310	J707385P104	RES MFLM 1/8W 100K 5%	1
R311	J707385P101	RES MFLM 1/8W 100R 5%	1
R312	J707385P104	RES MFLM 1/8W 100K 5%	1
R313	J707385P123	RES MFLM 1/8W 12K 5%	1
R314	J707385P104	RES MFLM 1/8W 100K 5%	1
R315	J707385P822	RES MFLM 1/8W 8K2 5%	1
R316	J707385P104	RES MFLM 1/8W 100K 5%	1
R317	J707385P471	RES MFLM 1/8W 470R 5%	1
R318	J707385P100	RES MFLM 1/8W 10R 5%	1
R319	J707385P101	RES MFLM 1/8W 100R 5%	1
R320	J707385P222	RES MFLM 1/8W 2K2 5%	1
R321	J707385P270	RES MFLM 1/8W 27R 5%	1
R322	J707385P471	RES MFLM 1/8W 470R 5%	1
R323	J707385P104	RES MFLM 1/8W 100K 5%	1
R324	J707385P104	RES MFLM 1/8W 100K 5%	1
R325	J707385P100	RES MFLM 1/8W 10R 5%	1
R327	J707385P123	RES MFLM 1/8W 12K 5%	1
R328	J707385P332	RES MFLM 1/8W 3K3 5%	1
R329	J707385P102	RES MFLM 1/8W 1K0 5%	1
R401	J707385P390	RES MFLM 1/8W 39R 5%	1
R402	J707385P100	RES MFLM 1/8W 10R 5%	1
R403	J707385P222	RES MFLM 1/8W 2K2 5%	1
R404	J707385P472	RES MFLM 1/8W 4K7 5%	1
R405	J707385P100	RES MFLM 1/8W 10R 5%	1
R406	J707385P820	RES MFLM 1/8W 82R 5%	1
R407	J707385P470	RES MFLM 1/8W 47R 5%	1
R408	J707385P470	RES MFLM 1/8W 47R 5%	1
R409	J707385P332	RES MFLM 1/8W 3K3 5%	1
R410	J707385P471	RES MFLM 1/8W 470R 5%	1
R411	J707385P123	RES MFLM 1/8W 12K 5%	1
R412	J707385P472	RES MFLM 1/8W 4K7 5%	1
R413	J707385P102	RES MFLM 1/8W 1K0 5%	1
R414	J707385P332	RES MFLM 1/8W 3K3 5%	1
R415	J707385P222	RES MFLM 1/8W 2K2 5%	1
R416	J707385P562	RES MFLM 1/8W 5K6 5%	1
R417	J707385P103	RES MFLM 1/8W 10K 5%	1
R418	J707385P153	RES MFLM 1/8W 15K 5%	1
R419	J707385P182	RES MFLM 1/8W 1K8 5%	1
R420	J707385P182	RES MFLM 1/8W 1K8 5%	1
R421	J707385P182	RES MFLM 1/8W 1K8 5%	1
R422	J707385P473	RES MFLM 1/8W 47K 5%	1
R423	J707385P153	RES MFLM 1/8W 15K 5%	1
R424	J708538P5	RES VAR CERM 10K 20%	1
R425	J707385P272	RES MFLM 1/8W 2K7 5%	1
R426	J707385P333	RES MFLM 1/8W 33K 5% G1/G4	1
R426	J707385P473	RES MFLM 1/8W 47K 5% G2/G3/G5/G6	1
R427	J707385P473	RES MFLM 1/8W 47K 5% G1/G3/G4/G6	1
R427	J707385P393	RES MFLM 1/8W 39K 5% G2/G5	1
R428	J707385P393	RES MFLM 1/8W 39K 5% G1/G4	1
R428	J707385P563	RES MFLM 1/8W 56K 5% G2/G3/G5/G6	1
R429	J707385P104	RES MFLM 1/8W 100K 5%	1

PARTS LIST FOR RADIO FREQUENCY BOARD RF633X : M905892GX BD REV. 2

Pos	Code No.	Description	Qt
R430	J709328P447	RES MFLM 1/8W 301K 1% G1/G2/G4/G5	1
R430	J707385P334	RES MFLM 1/8W 330K 5% G3/G6	1
R431	J707385P473	RES MFLM 1/8W 47K 5%	1
R432	J707385P473	RES MFLM 1/8W 47K 5%	1
R433	J707385P271	RES MFLM 1/8W 270R 5%	1
R434	J707385P102	RES MFLM 1/8W 1K0 5%	1
R435	J706147P3	RES THERM PTC 250R 25%	1
R436	J707385P392	RES MFLM 1/8W 3K9 5%	1
R437	J707406P7	RES THERM NTC 220R 10%	1
R438	J707385P222	RES MFLM 1/8W 2K2 5%	1
R439	J707385P392	RES MFLM 1/8W 3K9 5%	1
R440	J707385P392	RES MFLM 1/8W 3K9 5%	1
R441	J707385P101	RES MFLM 1/8W 100R 5%	1
R442	J708538P6	RES VAR CERM 20K 20%	1
R444	J707385P473	RES MFLM 1/8W 47K 5%	1
R445	J707385P273	RES MFLM 1/8W 27K 5%	1
R446	J707385P224	RES MFLM 1/8W 220K 5%	1
R447	J707385P392	RES MFLM 1/8W 3K9 5%	1
R448	J707385P101	RES MFLM 1/8W 100R 5%	1
R449	J707385P470	RES MFLM 1/8W 47R 5%	1
R450	J707385P103	RES MFLM 1/8W 10K 5%	1
R452	J707385P332	RES MFLM 1/8W 3K3 5%	1
R501	J707385P821	RES MFLM 1/8W 820R 5%	1
R502	J707385P821	RES MFLM 1/8W 820R 5%	1
R504	J707385P104	RES MFLM 1/8W 100K 5%	1
R505	J707385P104	RES MFLM 1/8W 100K 5%	1
R508	J707385P103	RES MFLM 1/8W 10K 5%	1
R509	J707385P151	RES MFLM 1/8W 150R 5%	1
R510	J707385P103	RES MFLM 1/8W 10K 5%	1
R512	J707385P561	RES MFLM 1/8W 560R 5%	1
R513	J707385P272	RES MFLM 1/8W 2K7 5%	1
R514	J707385P682	RES MFLM 1/8W 6K8 5%	1
R515	J707385P221	RES MFLM 1/8W 220R 5%	1
R516	J707385P221	RES MFLM 1/8W 220R 5%	1
R517	J707385P101	RES MFLM 1/8W 100R 5%	1
R518	J707385P100	RES MFLM 1/8W 10R 5%	1
R529	J707385P392	RES MFLM 1/8W 3K9 5%	1
R601	J706035P52	RES DEPC 0.1W 180K 5%	1
R602	J707385P122	RES MFLM 1/8W 1K2 5%	1
R603	J707385P122	RES MFLM 1/8W 1K2 5%	1
R605	J707385P104	RES MFLM 1/8W 100K 5%	1
R606	J707385P104	RES MFLM 1/8W 100K 5%	1
R607	J707385P561	RES MFLM 1/8W 560R 5%	1
R608	J707385P682	RES MFLM 1/8W 6K8 5%	1
R609	J707385P332	RES MFLM 1/8W 3K3 5%	1
R610	J707385P331	RES MFLM 1/8W 330R 5%	1
R611	J707385P151	RES MFLM 1/8W 150R 5%	1
R612	J707385P102	RES MFLM 1/8W 1K0 5%	1
R613	J707385P101	RES MFLM 1/8W 100R 5%	1
R614	J707385P272	RES MFLM 1/8W 2K7 5%	1
R615	J707385P682	RES MFLM 1/8W 6K8 5%	1
R616	J707385P181	RES MFLM 1/8W 180R 5%	1
R617	J707385P563	RES MFLM 1/8W 56K 5%	1
R618	J707385P683	RES MFLM 1/8W 68K 5%	1
R619	J707385P104	RES MFLM 1/8W 100K 5%	1
R620	J707385P102	RES MFLM 1/8W 1K0 5%	1
R621	J707385P331	RES MFLM 1/8W 330R 5%	1

Pos	Code No.	Description	Qt
R622	J707385P681	RES MFLM 1/8W 680R 5%	1
R623	J707385P224	RES MFLM 1/8W 220K 5%	1
R624	J707385P223	RES MFLM 1/8W 22K 5%	1
R625	J707385P101	RES MFLM 1/8W 100R 5%	1
R626	J707385P100	RES MFLM 1/8W 10R 5%	1
R627	J707385P103	RES MFLM 1/8W 10K 5%	1
R628	J707385P224	RES MFLM 1/8W 220K 5%	1
R629	J707385P124	RES MFLM 1/8W 120K 5%	1
R630	J707385P100	RES MFLM 1/8W 10R 5%	1
R631	J707385P684	RES MFLM 1/8W 680K 5%	1
R632	J707385P223	RES MFLM 1/8W 22K 5%	1
R633	J707385P824	RES MFLM 1/8W 820K 5%	1
R634	J707385P123	RES MFLM 1/8W 12K 5%	1
R635	J707385P102	RES MFLM 1/8W 1K0 5%	1
R636	J707385P332	RES MFLM 1/8W 3K3 5%	1
R637	J707385P181	RES MFLM 1/8W 180R 5%	1
R638	J707385P474	RES MFLM 1/8W 470K 5%	1
R639	J707385P333	RES MFLM 1/8W 33K 5%	1
R640	J707385P105	RES MFLM 1/8W 1M0 10%	1
R641	J707385P184	RES MFLM 1/8W 180K 5%	1
R642	J707385P184	RES MFLM 1/8W 180K 5%	1
R643	J707385P105	RES MFLM 1/8W 1M0 10%	1
R644	J707385P473	RES MFLM 1/8W 47K 5%	1
R645	J707385P153	RES MFLM 1/8W 15K 5%	1
R646	J707385P393	RES MFLM 1/8W 39K 5%	1
R647	J707385P333	RES MFLM 1/8W 33K 5%	1
R649	J707385P473	RES MFLM 1/8W 47K 5%	1
R650	J707385P562	RES MFLM 1/8W 5K6 5%	1
R651	J707385P473	RES MFLM 1/8W 47K 5%	1
R652	J707385P223	RES MFLM 1/8W 22K 5%	1
R653	J707385P823	RES MFLM 1/8W 82K 5%	1
R654	J707385P153	RES MFLM 1/8W 15K 5%	1
R655	J707385P183	RES MFLM 1/8W 18K 5%	1
R656	J707385P393	RES MFLM 1/8W 39K 5%	1
R657	J707385P823	RES MFLM 1/8W 82K 5%	1
R658	J707385P154	RES MFLM 1/8W 150K 5%	1
R659	J707385P223	RES MFLM 1/8W 22K 5%	1
R660	J707385P333	RES MFLM 1/8W 33K 5%	1
R661	J707385P473	RES MFLM 1/8W 47K 5%	1
R662	J707385P473	RES MFLM 1/8W 47K 5%	1
R663	J708538P6	RES VAR CERM 20K 20%	1
R664	J707385P473	RES MFLM 1/8W 47K 5%	1
R665	J707385P824	RES MFLM 1/8W 820K 5%	1
R666	J707385P124	RES MFLM 1/8W 120K 5%	1
R667	J707385P124	RES MFLM 1/8W 120K 5%	1
R668	J707385P122	RES MFLM 1/8W 1K2 5%	1
R669	J707385P221	RES MFLM 1/8W 220R 5%	1
R670	J707385P103	RES MFLM 1/8W 10K 5%	1
R671	J707385P562	RES MFLM 1/8W 5K6 5%	1
R672	J707385P822	RES MFLM 1/8W 8K2 5%	1
R673	J707385P822	RES MFLM 1/8W 8K2 5%	1
R674	J707385P101	RES MFLM 1/8W 100R 5%	1
R675	J708538P5	RES VAR CERM 10K 20%	1
R676	J707385P562	RES MFLM 1/8W 5K6 5%	1
R677	J708538P5	RES VAR CERM 10K 20%	1
R678	J707385P470	RES MFLM 1/8W 47R 5%	1
R679	J707385P821	RES MFLM 1/8W 820R 5%	1
R680	J708538P7	RES VAR CERM 50K 20%	1
R681	J707385P223	RES MFLM 1/8W 22K 5%	1

PARTS LIST FOR RADIO FREQUENCY BOARD RF633X : M905892GX BD REV. 2

Pos	Code No.	Description	Qt
R682	J707385P152	RES MFLM 1/8W 1K5 5%	1
R683	J707385P223	RES MFLM 1/8W 22K 5%	1
R684	J707385P183	RES MFLM 1/8W 18K 5%	1
R685	J707385P183	RES MFLM 1/8W 18K 5%	1
R686	J707385P103	RES MFLM 1/8W 10K 5%	1
R687	J707385P103	RES MFLM 1/8W 10K 5%	1
R689	J707385P105	RES MFLM 1/8W 1M0 10%	1
R690	J707385P124	RES MFLM 1/8W 120K 5%	1
R691	J707385P273	RES MFLM 1/8W 27K 5%	1
R692	J707385P223	RES MFLM 1/8W 22K 5%	1
R693	J707385P105	RES MFLM 1/8W 1M0 10%	1
R694	J707385P223	RES MFLM 1/8W 22K 5%	1
R695	J707385P105	RES MFLM 1/8W 1M0 10%	1
R696	J707385P223	RES MFLM 1/8W 22K 5%	1
R697	J707385P105	RES MFLM 1/8W 1M0 10%	1
R698	J707385P103	RES MFLM 1/8W 10K 5%	1
R699	J707385P392	RES MFLM 1/8W 3K9 5%	1
R700	J707385P273	RES MFLM 1/8W 27K 5%	1
R702	A701250P420	RES MFLM 1/4W 158K 1% *	1
R703	A701250P178	RES MFLM 1/4W 634R 1% *	1
R704	A701250P342	RES MFLM 1/4W 26K7 1% *	1
R707	J707385P104	RES MFLM 1/8W 100K 5%	1
R708	J707385P105	RES MFLM 1/8W 1M0 10%	1
R709	J707385P181	RES MFLM 1/8W 180R 5%	1
R710	J707385P101	RES MFLM 1/8W 100R 5%	1
R711	J707385P223	RES MFLM 1/8W 22K 5%	1
R712	J707385P154	RES MFLM 1/8W 150K 5%	1
R713	J707385P821	RES MFLM 1/8W 820R 5%	1
R714	J707385P104	RES MFLM 1/8W 100K 5%	1
R715	J707385P563	RES MFLM 1/8W 56K 5%	1
U100	J708165P2	IC LIN OP-AMP 324	1
U201	J708333P1	IC LIN VR,FIX 4785	1
U401	J707449P1	IC LIN IF-AMP 3357	1
U402	M905766G1	INT CKT SQ 4002 G1/ 4	1
U402	M905766G2	INT CKT SQ 4003 G3/ 6	1
U402	M905766G3	INT CKT SQ 4004 G2/ 5	1
U601	J707859P1	IC LIN OP-AMP 204	1
U602	J707859P1	IC LIN OP-AMP 204	1
U604	J707859P1	IC LIN OP-AMP 204	1
U606	J707243P1	IC DIG REG 4094	1
U607	J707374P1	IC PLL PRESC 8793	1
U608	B800902P1	IC PLL SYN CUSTOM DES	1
U609	J707859P1	IC LIN OP-AMP 204	1
U610	J708503P2	IC LIN CMPAR LM 339	1
U615	J708621P2	CPLR OPTO PC 827	1
U616	J708503P2	IC LIN CMPAR LM 339	1
W003	J707256P1	COIL FIX	1
W004	J707256P1	COIL FIX	1
W005	J708717P1	STRAP	1
W006	J708716P1	STRAP	1
Y401	J707309P1	CRYSTAL UNIT 20.94 0MHZ	1
Y701	J707567P19	CRYSTAL UNIT 7.40 0MHZ	1
Z401	J707310P1	FLTR CRY 21.4 +/-7.5 KHZ G1/G4	1
Z401	J707310P2	FLTR CRY 21.4 +/-6.0 KHZ G2/G5	1
Z401	J707310P3	FLTR CRY 21.4 +/-3.7 KHZ G3/G6	1

Pos	Code No.	Description	Qt
Z402	J707446P1	FLTR CER 455K +/-10K Z G1/G4	1
Z402	J707446P3	FLTR CER 455K +/-7.5 HZ G2/G5	1
Z402	J707446P1	FLTR CER 455K +/-4.5 HZ G3/G6	1
Z403	J707446P1	FLTR CER 455K +/-10K Z G1/G4	1
Z403	J707446P3	FLTR CER 455K +/-7.5 HZ G2/G5	1
Z403	J707446P1	FLTR CER 455K +/-4.5 HZ G3/G6	1
	M905893P1R2	BD PW	1
		NON REFERENCED ITEMS:	
	J708561P3	COIL FIXED	3
	K805776P1	CASTING HEAT SINK	1
	K805569G2	SHIELD METALLIZED	1
	J706281P7	CORE SCREW FERR U 25	8
	J706804P2	WASH INS CRYS FOR HC-18/U	4

PARTS LIST FOR RADIO FREQUENCY BOARD RF633X : M905892GX BD REV. 2

Pos	Code No.	Description	Qt
		COMPONENTS REVISED SINCE LAST EDITION ARE MARKED *	
----	----------	----------	---
			REV
	M906892G1	RF6332S25 CH. SPAC. 25kHz/25W OUT	N
	M906892G2	RF6333S25 CH. SPAC. 20kHz/25W OUT	P
	M906892G3	RF6334S25 CH. SPAC. 12.5kHz/25W OUT	M
	M906892G4	RF6332S6 CH. SPAC. 25kHz/25W OUT	N
	M906892G5	RF6333S6 CH. SPAC. 20kHz/25W OUT	P
	M906892G6	RF6334S6 CH. SPAC. 12.5kHz/25W OUT	M
----	----------	----------	---
C100	J707809P13	CAP CER NPO 10P 5%	1
C101	21R13741M25	CAP CER CL2 1N5 10%	1
C102	21R13741M29	CAP CER CL2 2N2 10%	1
C103	21R13740A59	CAP CER NPO 150P 5%	1
C104	J707809P15	CAP CER NPO 15P 5%	1
C105	J707809P17	CAP CER NPO 22P 5%	1
C106	J707809P15	CAP CER NPO 15P 5%	1
C107	21R13741M29	CAP CER CL2 2N2 10%	1
C108	21R13741M29	CAP CER CL2 2N2 10%	1
C109	J707809P25	CAP CER NPO 100P 5%	1
C110	J707809P23	CAP CER NPO 68P 5% G1/G2/G3	1
C110	J707809P17	CAP CER NPO 22P 5% G4/G5/G6	1
C111	21R13741M29	CAP CER CL2 2N2 10%	1
C112	21R13741M45	CAP CER CL2 10N 10%	1
C113	21R13741M29	CAP CER CL2 2N2 10%	1
C114	21R13741M29	CAP CER CL2 2N2 10%	1
C115	J707809P27	CAP CER NPO 150P 5% G1/G2/G3	1
C115	J707809P23	CAP CER NPO 68P 5% G4/G5/G6	1
C116	J707809P27	CAP CER NPO 150P 5% G1/G2/G3	1
C116	J707809P24	CAP CER NPO 82P 5% G4/G5/G6	1
C117	J707809P27	CAP CER NPO 150P 5% G4/G5/G6	1
C118	J707809P27	CAP CER NPO 150P 5% G4/G5/G6	1
C119	J707809P27	CAP CER NPO 150P 5% G4/G5/G6	1
C120	J707353P6	CAP ELECT 4U7 25V	1
C121	21R13741M45	CAP CER CL2 10N 10%	1
C122	21R13741M29	CAP CER CL2 2N2 10%	1
C123	21R13741M45	CAP CER CL2 10N 10%	1
C124	21R13741M29	CAP CER CL2 2N2 10%	1
C125	A700006P40	CAP MICA 170P 5% G1/G2/G3	1
C125	A700006P38	CAP MICA 150P 5% G4/G5/G6	1
C126	J709524P59	CAP CER RF 270P 5% G1/G2/G3	1
C126	J709524P49	CAP CER RF 100P 5% G4/G5/G6	1
C127	J709524P51	CAP CER RF 120P 5% G1/G2/G3	1
C127	J709524P45	CAP CER RF 68P 5% G4/G5/G6	1
C128	A700006P35	CAP MICA 110P 5% G1/G2/G3	1
C128	A700006P26	CAP MICA 47P 5% G4/G5/G6	1
C130	J707809P14	CAP CER NPO 12P 5%	1
C131	J707809P13	CAP CER NPO 10P 5%	1
C132	J707809P12	CAP CER NPO 8P2 .25P	1
C133	J707809P13	CAP CER NPO 10P 5%	1
C134	J707353P6	CAP ELECT 4U7 ,25V	1
C136	21R13741C05	CAP CER CL2 33N 5%	1
C137	21R13741M29	CAP CER CL2 2N2 10%	1
C138	21R13741M29	CAP CER CL2 2N2 10%	1
C139	21R13741M29	CAP CER CL2 2N2 10%	1
C140	21R13741M29	CAP CER CL2 2N2 10%	1
C141	21R13741M29	CAP CER CL2 2N2 10%	1
C142	A700006P14	CAP MICA 18P 5%	1
C143	A700006P26	CAP MICA 47P 5%	1
C144	A700006P26	CAP MICA 47P 5%	1
C145	A700006P18	CAP MICA 24P 5%	1
C146	21R13741M29	CAP CER CL2 2N2 10%	1
C147	21R13741M29	CAP CER CL2 2N2 10%	1
C148	21R13741M29	CAP CER CL2 2N2 10%	1
C149	21R13741M29	CAP CER CL2 2N2 10%	1
C150	J707809P10	CAP CER NPO 5P6 .25P G1/G2/G3	1
C150	J707809P12	CAP CER NPO 8P2 .25P G4/G5/G6	1
C151	J707809P10	CAP CER NPO 5P6 .25P G1/G2/G3	1
C151	J707809P12	CAP CER NPO 8P2 .25P G4/G5/G6	1
C152	21R13741M29	CAP CER CL2 2N2 10%	1
C153	21R13741M29	CAP CER CL2 2N2 10%	1
C154	21R13741M29	CAP CER CL2 2N2 10%	1
C155	21R13741M29	CAP CER CL2 2N2 10%	1
C156	J707353P3	CAP ELECT 0U47 ,50V	1
C157	21R13741M29	CAP CER CL2 2N2 10%	1
C158	21R13741M29	CAP CER CL2 2N2 10%	1
C159	21R13741M45	CAP CER CL2 10N 10%	1
C160	21R13740A71	CAP CER NPO 470P 5%	1
C161	21R13741M29	CAP CER CL2 2N2 10%	1
C162	21R13741M45	CAP CER CL2 10N 10%	1
C163	21R13741C05	CAP CER CL2 33N 5%	1
C164	21R13741M29	CAP CER CL2 2N2 10%	1
C165	J707809P16	CAP CER NPO 18P 5% G1/G2/G3	1
C165	J707809P17	CAP CER NPO 22P 5% G4/G5/G6	1
C166	21R13741M21	CAP CER CL2 1N0 10%	1
C167	J707412P13	CAP PYES 470N 10%	1
C168	21R13741M29	CAP CER CL2 2N2 10%	1

PARTS LIST FOR RADIO FREQUENCY BOARD RF633X : M905892GX BD REV. 2

Pos	Code No.	Description	Qt
C169	J707809P1	CAP CER NPO 1P0 .25P	1
C170	21R13741M45	CAP CER CL2 10N 10%	1
C171	21R13741M45	CAP CER CL2 10N 10%	1
C172	21R13741M45	CAP CER CL2 10N 10%	1
C201	21R13741C17	CAP CER CL2 100N 5%	1
C202	J707444P8	CAP TA SOL 22U 16V	1
C203	J706005P12	CAP ELECT 47U 40V	1
C204	21R13741M29	CAP CER CL2 2N2 10%	1
C205	J707412P9	CAP PYES 100N 10%	1
C206	J707444P4	CAP TA SOL 1U 35V	1
C301	21R13740A63	CAP CER NPO 220P 5%	1
C302	21R13741M21	CAP CER CL2 1N0 10%	1
C304	21R13740A21	CAP CER NPO 5P6 .25P	1
C305	21R13740A39	CAP CER NPO 27P 5%	1
C306	J707483P4	CAP PHEN 0P56 5%	1
C307	21R13741M21	CAP CER CL2 1N0 10%	1
C309	21R13740A39	CAP CER NPO 27P 5%	1
C310	21R13741M21	CAP CER CL2 1N0 10%	1
C311	21R13740A21	CAP CER NPO 5P6 .25P	1
C312	21R13740C19	CAP CER NPO 1N2 5%	1
C315	21R13740A21	CAP CER NPO 5P6 .25P	1
C317	J707444P2	CAP TA SOL 0U22 35V	1
C318	21R13741M21	CAP CER CL2 1N0 10%	1
C319	21R13740A39	CAP CER NPO 27P 5%	1
C320	21R13741M21	CAP CER CL2 1N0 10%	1
C322	J707483P7	CAP PHEN 1P00 5%	1
C323	J707483P6	CAP PHEN 0P82 5%	1
C324	21R13740A15	CAP CER NPO 3P3 .25P	1
C325	21R13741M21	CAP CER CL2 1N0 10%	1
C326	21R13740A39	CAP CER NPO 27P 5%	1
C328	21R13740A39	CAP CER NPO 27P 5%	1
C331	J707483P6	CAP PHEN 0P82 5%	1
C332	21R13740A39	CAP CER NPO 27P 5%	1
C333	21R13740A15	CAP CER NPO 3P3 .25P	1
C334	21R13740A17	CAP CER NPO 3P9 .25P	1
C335	21R13741M21	CAP CER CL2 1N0 10%	1
C338	21R13740A41	CAP CER NPO 33P 5%	1
C339	21R13741M21	CAP CER CL2 1N0 10%	1
C340	21R13741A33	CAP CER CL2 3N3 5%	1
C345	21R13741M21	CAP CER CL2 1N0 10%	1
C347	21R13741M21	CAP CER CL2 1N0 10%	1
C348	21R13741M21	CAP CER CL2 1N0 10%	1
C350	21R13740A21	CAP CER NPO 5P6 .25P	1
C351	21R13740A35	CAP CER NPO 18P 5%	1
C353	J707483P8	CAP PHEN 1P20 5%	1
C354	21R13740A35	CAP CER NPO 18P 5%	1
C355	21R13740A19	CAP CER NPO 4P7 .25P	1
C356	21R13741M21	CAP CER CL2 1N0 10%	1
C357	21R13740A03	CAP CER NPO 1P0 .25P	1
C358	21R13740A03	CAP CER NPO 1P0 .25P	1
C359	21R13741M21	CAP CER CL2 1N0 10%	1
C401	21R13741A33	CAP CER CL2 3N3 5%	1
C402	21R13741A33	CAP CER CL2 3N3 5%	1
C403	21R13741A33	CAP CER CL2 3N3 5%	1
C404	21R13740A41	CAP CER NPO 33P 5%	1
C405	21R13741C17	CAP CER CL2 100N 5%	1
C406	21R13740A21	CAP CER NPO 5P6 .25P	1
C407	21R13740A39	CAP CER NPO 27P 5%	1
C408	21R13741M21	CAP CER CL2 1N0 10%	1

Pos	Code No.	Description	Qt
C409	21R13741A33	CAP CER CL2 3N3 5%	1
C410	J707444P8	CAP TA SOL 22U 16V	1
C411	21R13741C17	CAP CER CL2 100N 5%	1
C412	21R13741C17	CAP CER CL2 100N 5%	1
C413	21R13740A41	CAP CER NPO 33P 5%	1
C414	21R13741A33	CAP CER CL2 3N3 5%	1
C415	21R13740A63	CAP CER NPO 220P 5%	1
C416	21R13740A57	CAP CER NPO 120P 5%	1
C417	21R13740A39	CAP CER NPO 27P 5%	1
C418	21R13741M45	CAP CER CL2 10N 10%	1
C419	21R13741C17	CAP CER CL2 100N 5%	1
C420	21R13741M45	CAP CER CL2 10N 10%	1
C421	21R13741C17	CAP CER CL2 100N 5%	1
C422	21R13741C17	CAP CER CL2 100N 5%	1
C423	21R13740A29	CAP CER NPO 10P 5%	1
C424	21R13741A33	CAP CER CL2 3N3 5%	1
C425	J707412P13	CAP PYES 470N 10%	1
C426	21R13740C25	CAP CER NPO 2N2 5%	1
C427	21R13740A67	CAP CER NPO 330P 5%	1
C428	21R13740A65	CAP CER NPO 270P 5%	1
C429	21R13741M45	CAP CER CL2 10N 10%	1
C430	J707444P8	CAP TA SOL 22U 16V	1
C431	J707444P8	CAP TA SOL 22U 16V	1
C432	21R13741C17	CAP CER CL2 100N 5%	1
C433	21R13741C17	CAP CER CL2 100N 5%	1
C434	21R13741A33	CAP CER CL2 3N3 5%	1
C435	21R13740A03	CAP CER NPO 1P0 .25P	1
C436	21R13741C17	CAP CER CL2 100N 5%	1
C437	21R13740A46	CAP CER NPO 47P 5%	1
C438	21R13741M45	CAP CER CL2 10N 10%	1
C501	J707412P11	CAP PYES 220N 10%	1
C502	J707412P11	CAP PYES 220N 10%	1
C504	A700235P16	CAP CER N150 18P 5%	1
C505	A700235P11	CAP CER N150 6P8 .25P	1
C506	A700235P20	CAP CER N150 39P 5%	1
C507	A700235P19	CAP CER N150 33P 5%	1
C508	A700235P25	CAP CER N150 100P 5%	1
C509	21R13740A19	CAP CER NPO 4P7 .25P	1
C512	21R13740A17	CAP CER NPO 3P9 .25P	1
C513	21R13741A09	CAP CER CL2 330P 5%	1
C514	21R13741M25	CAP CER CL2 1N5 10%	1
C517	J707444P6	CAP TA SOL 4U7 35V	1
C518	21R13740A05	CAP CER NPO 1P2 .25P	1
C519	21R13741M25	CAP CER CL2 1N5 10%	1
C520	21R13740A63	CAP CER NPO 220P 5%	1
C521	21R13740A37	CAP CER NPO 22P 5%	1
C522	21R13741M25	CAP CER CL2 1N5 10%	1
C523	21R13740A11	CAP CER NPO 2P2 .25P	1
C524	21R13741M13	CAP CER CL2 470P 10%	1
C525	21R13741M13	CAP CER CL2 470P 10%	1
C527	21R13741M13	CAP CER CL2 470P 10%	1
C528	21R13741C17	CAP CER CL2 100N 5%	1
C540	21R13741M13	CAP CER CL2 470P 10%	1
C541	21R13741M13	CAP CER CL2 470P 10%	1
C543	21R13741M13	CAP CER CL2 470P 10%	1
C544	21R13741M13	CAP CER CL2 470P 10%	1
C545	21R13740A55	CAP CER NPO 100P 5%	1
C601	J707412P11	CAP PYES 220N 10%	1
C602	J707412P11	CAP PYES 220N 10%	1

Pos	Code No.	Description	Qt
C603	21R13741C17	CAP CER CL2 100N 5%	1
C604	A700235P13	CAP CER N150 10P 5%	1
C605	A700235P10	CAP CER N150 5P6 .25P	1
C606	A700235P38	CAP CER N150 16P 5%	1
C607	A700235P11	CAP CER N150 6P8 .25P	1
C608	A700233P9	CAP CER CL2 2N2 20%	1
C610	21R13740A55	CAP CER NP0 100P 5%	1
C611	21R13740A13	CAP CER NP0 2P7 .25P	1
C612	21R13741M25	CAP CER CL2 1N5 10%	1
C613	J707444P6	CAP TA SOL 4U7 35V	1
C614	21R13741M25	CAP CER CL2 1N5 10%	1
C615	21R13741M37	CAP CER CL2 4N7 10%	1
C616	21R13741M25	CAP CER CL2 1N5 10%	1
C617	21R13740A49	CAP CER NP0 56P 5%	1
C618	21R13740A03	CAP CER NP0 1P0 .25P	1
C619	21R13741M25	CAP CER CL2 1N5 10%	1
C620	21R13740A55	CAP CER NP0 100P 5%	1
C621	21R13740A33	CAP CER NP0 15P 5%	1
C622	21R13740A07	CAP CER NP0 1P5 .25P	1
C623	21R13741C17	CAP CER CL2 100N 5%	1
C624	21R13740A55	CAP CER NP0 100P 5%	1
C625	21R13741M25	CAP CER CL2 1N5 10%	1
C626	21R13741M21	CAP CER CL2 1N0 10%	1
C627	21R13741C17	CAP CER CL2 100N 5%	1
C628	21R13740A15	CAP CER NP0 3P3 .25P	1
C629	21R13740A59	CAP CER NP0 150P 5%	1
C630	21R13741C17	CAP CER CL2 100N 5%	1
C631	21R13741M25	CAP CER CL2 1N5 10%	1
C632	J707444P6	CAP TA SOL 4U7 35V	1
C633	J707444P17	CAP TA SOL 47U 10V	1
C634	21R13741C17	CAP CER CL2 100N 5%	1
C635	21R13741M05	CAP CER CL2 220P 10%	1
C636	J707444P17	CAP TA SOL 47U 10V	1
C637	21R13741C17	CAP CER CL2 100N 5%	1
C638	21R13741M21	CAP CER CL2 1N0 10%	1
C639	21R13741A33	CAP CER CL2 3N3 5%	1
C640	J707412P8	CAP PYES 68N 10%	1
C641	J707412P13	CAP PYES 470N 10%	1
C642	J707412P13	CAP PYES 470N 10%	1
C643	21R13741C17	CAP CER CL2 100N 5%	1
C644	21R13740A13	CAP CER NP0 2P7 .25P	1
C646	21R13740A57	CAP CER NP0 120P 5%	1
C647	21R13740A29	CAP CER NP0 10P 5%	1
C652	21R13741C09	CAP CER CL2 47N 5%	1
C653	J707444P6	CAP TA SOL 4U7 35V	1
C654	A700005P9	CAP PYES 22N 10%	1
C656	21R13741M13	CAP CER CL2 470P 10%	1
C657	21R13741M13	CAP CER CL2 470P 10%	1
C659	21R13741M21	CAP CER CL2 1N0 10%	1
C660	21R13741M45	CAP CER CL2 10N 10%	1
C666	21R13741M13	CAP CER CL2 470P 10%	1
C667	21R13741M13	CAP CER CL2 470P 10%	1
C701	21R13740A37	CAP CER NP0 22P 5%	1
C702	J708702P22	CAP CER N750 56P 5%	1
C703	21R13740A63	CAP CER NP0 220P 5%	1
C705	21R13741M21	CAP CER CL2 1N0 10%	1
C706	21R13741M45	CAP CER CL2 10N 10%	1
C707	21R13740A21	CAP CER NP0 5P6 .25P	1
C708	21R13741M45	CAP CER CL2 10N 10%	1

Pos	Code No.	Description	Qt
C709	21R13741M45	CAP CER CL2 10N 10%	1
D100	A700047P3	DIO SI SIG 1N6263	1
D101	J706892P1	DIO SI PIN UM 940	1
D102	J706892P1	DIO SI PIN UM 940	1
D103	J707390P1	DIO SI SIG BAV 74	1
D300	J707928P2	DIO SI CAP BB 809	1
D301	J707928P2	DIO SI CAP BB 809	1
D302	J707928P2	DIO SI CAP BB 809	1
D303	J707928P2	DIO SI CAP BB 809	1
D304	J707928P2	DIO SI CAP BB 809	1
D305	J707928P2	DIO SI CAP BB 809	1
D306	J707928P2	DIO SI CAP BB 809	1
D307	J707928P2	DIO SI CAP BB 809	1
D401	A700025P8	DIO SI ZENR 6V8,5% 0.4W	1
D501	J707928P2	DIO SI CAP BB 809	1
D502	J707928P2	DIO SI CAP BB 809	1
D503	J707928P2	DIO SI CAP BB 809	1
D504	J707928P2	DIO SI CAP BB 809	1
D505	J707928P2	DIO SI CAP BB 809	1
D506	J707769P1	DIO SI CAP BBY 31	1
D601	J707928P2	DIO SI CAP BB 809	1
D602	J707928P2	DIO SI CAP BB 809	1
D603	J709536P1	DIO SI CAP MV 211	1
D604	J709536P1	DIO SI CAP MV 211	1
D605	J707389P1	DIO SI SIG BAV 99	1
D606	J708681P1	DIO SI SIG BAW 56	1
D607	J707390P1	DIO SI SIG BAV 74	1
D608	J707390P1	DIO SI SIG BAV 74	1
D610	J708681P1	DIO SI SIG BAW 56	1
D701	A700073P1	DIO SI CAP BB 409	1
D702	J707390P1	DIO SI SIG BAV 74	1
L100	K805653G9	COIL ASM 9 1/2T	1
L101	A700024P7	COIL RF FIX 0.33UH 10%	1
L102	A700024P3	COIL RF FIX 0.15UH 10%	1
L103	A700024P12	COIL RF FIX 0.82UH 10%	1
L104	K805653G2	COIL ASM 2 1/2T	1
L105	K805653G5	COIL ASM 5 1/2T G1/G2/G3	1
L105	K805653G8	COIL ASM 8 1/2T G4/G5/G6	1
L106	J707339G1	COIL FIX ASM	1
L107	K805653G4	COIL ASM 4 1/2T	1
L108	A700024P3	COIL RF FIX 0.15UH 10%	1
L109	J707256P2	COIL FIX	1
L110	J709287P1	CORE TOR FERR	1
L111	J707256P1	COIL FIX G1/G2/G3	1
L111	K805653G1	COIL ASM 1 1/2T G4/G5/G6	1
L113	A700024P3	COIL RF FIX 0.15UH 10%	1
L114	J709287P1	CORE TOR FERR	1
L115	J707256P2	COIL FIX	1
L116	J709287P1	CORE TOR FERR	1
L117	J709603P2	COIL G1/ 2/G3	1
L117	K805653G6	COIL ASM 6 1/2T G4/ 5/G6	1
L118	J709603P1	COIL G1/ 2/G3	1
L118	J707426P6	COIL FIX G4/ 5/G6	1
L121	A700024P18	COIL RF FIX 2.7UH 10%	1
L122	A700024P25	COIL RF FIX 10UH 10%	1

PARTS LIST FOR RADIO FREQUENCY BOARD RF633X : M905892GX BD REV. 2

Pos	Code No.	Description	Qt
L123	A700024P25	COIL RF FIX 10UH 10%	1
L124	K805653G7	COIL ASM 7 1/2 T	1
L125	K805653G7	COIL ASM 7 1/2 T	1
L126	K805653G8	COIL ASM 8 1/2T	1
L127	A700024P25	COIL RF FIX 10UH 10%	1
L128	A700024P25	COIL RF FIX 10UH 10%	1
L301	J709099P8	COIL RF VAR 7-1/2	1
L302	J709099P15	COIL RF VAR 7-1/2 ,TAP	1
L303	J707486P11	COIL RF FIX 2.2UH 10%	1
L304	J709099P8	COIL RF VAR 7-1/2	1
L305	J707486P2	COIL RF FIX 3.3UH 10%	1
L306	J709099P8	COIL RF VAR 7-1/2	1
L308	J709099P8	COIL RF VAR 7-1/2	1
L310	J709099P9	COIL RF VAR 7-1/2 ,TAP	1
L312	J708428P1	COIL RF VAR 45 MHZ	1
L313	J709099P12	COIL RF VAR 5-1/2 ,TAP	1
L314	J709099P14	COIL RF VAR 5-1/2 ,TAP	1
L401	J707486P3	COIL RF FIX 6.8UH 10%	1
L403	K805570G6	COIL ASM	1
L405	J708428P1	COIL RF VAR 45 MHZ	1
L406	K805570G5	COIL ASM	1
L407	A700024P25	COIL RF FIX 10UH 10%	1
L408	J708428P1	COIL RF VAR 45 MHZ	1
L409	J707431P1	COIL RF VAR 455KHZ 25%	1
L410	J707431P1	COIL RF VAR 455KHZ 25%	1
L501	A700024P21	COIL RF FIX 4.7UH 10%	1
L502	A700024P21	COIL RF FIX 4.7UH 10%	1
L504	A700024P21	COIL RF FIX 4.7UH 10%	1
L505	L855671P2	COIL RADIO FREQUENCY	1
L506	A700024P21	COIL RF FIX 4.7UH 10%	1
L508	A700024P5	COIL RF FIX 0.22UH 10%	1
L601	A700024P21	COIL RF FIX 4.7UH 10%	1
L602	A700024P21	COIL RF FIX 4.7UH 10%	1
L604	A700024P21	COIL RF FIX 4.7UH 10%	1
L605	L855671P2	COIL RADIO FREQUENCY	1
L606	A700024P21	COIL RF FIX 4.7UH 10%	1
L607	A700024P4	COIL RF FIX 0.18UH 10%	1
L701	K805570G7	COIL ASM	1
L702	A700024P43	COIL RF FIX 330UH 10%	1
L703	A700024P27	COIL RF FIX 15UH 10%	1
P102	J707064P112	CONN PWB FEM 1 -CKT	1
P105	A701883P4	CONN PWB FEM RECP	1
Q100	J707388P1	TSTR NPN SI BFR 53	1
Q101	A701940P1	TSTR NPN SI RF-PWR 0.4W	1
Q102	J709517P1	TSTR NPN SI RF-PWR 3W	1
Q103	J709162P1	TSTR NPN SI RF-PWR 27W G1/G2/G3	1
Q103	J709163P1	TSTR NPN SI RF-PWR 10W G4/G5/G6	1
Q106	J707432P1	TSTR PNP SI BCX 18	1
Q107	J707386P1	TSTR NPN SI BCW 32	1
Q108	J708406P1	TSTR NPN SI BD 233	1
Q109	J707386P1	TSTR NPN SI BCW 32	1
Q201	J707435P1	TSTR PNP SI BC 369	1
Q202	J707386P1	TSTR NPN SI BCW 32	1
Q203	J707432P1	TSTR PNP SI BCX 18	1
Q204	J707386P1	TSTR NPN SI BCW 32	1
Q301	J706011P2	TSTR NPN SI BFR 91	1
Q302	J707817P1	TSTR JFET SI J 309	1

Pos	Code No.	Description	Qt
Q401	J707817P1	TSTR JFET SI J 309	1
Q402	J707817P1	TSTR JFET SI J 309	1
Q403	J707419P1	TSTR JFET SI BF511	1
Q404	J708418P1	TSTR NPN SI BFS 20	1
Q405	J708418P1	TSTR NPN SI BFS 20	1
Q406	J708418P1	TSTR NPN SI BFS 20	1
Q407	J707386P1	TSTR NPN SI BCW 32	1
Q408	J707387P1	TSTR PNP SI BCW 30	1
Q501	J707817P1	TSTR JFET SI J 309	1
Q502	J708318P1	TSTR PNP SI BFT 92	1
Q601	J707817P1	TSTR JFET SI J 309	1
Q603	J708318P1	TSTR PNP SI BFT 92	1
Q604	J707433P1	TSTR MFET SI BF 989	1
Q605	J707386P1	TSTR NPN SI BCW 32	1
Q612	J707386P1	TSTR NPN SI BCW 32	1
Q613	J707386P1	TSTR NPN SI BCW 32	1
Q701	J707419P1	TSTR JFET SI BF511	1
Q702	J707387P1	TSTR PNP SI BCW 30	1
R000	J707385P332	RES MFLM 1/8W 3K3 5%	1
R100	J707385P101	RES MFLM 1/8W 100R 5% G4/G5/G6	1
R101	J707385P470	RES MFLM 1/8W 47R 5%	1
R102	J707385P471	RES MFLM 1/8W 470R 5%	1
R103	J707385P390	RES MFLM 1/8W 39R 5%	1
R104	J707385P331	RES MFLM 1/8W 330R 5%	1
R105	J707385P122	RES MFLM 1/8W 1K2 5%	1
R106	J707385P100	RES MFLM 1/8W 10R 5%	1
R107	J707385P100	RES MFLM 1/8W 10R 5%	1
R108	J707385P560	RES MFLM 1/8W 56R 5%	1
R109	J707385P100	RES MFLM 1/8W 10R 5%	1
R110	J707385P100	RES MFLM 1/8W 10R 5% G1/G2/G3	1
R110	J707385P910	RES MFLM 1/8W 1R0 20% G4/G5/G6	1
R111	J707385P220	RES MFLM 1/8W 22R 5%	1
R112	J707385P947	RES MFLM 1/8W 4R7 20%	1
R113	J707385P100	RES MFLM 1/8W 10R 5%	1
R114	J707385P910	RES MFLM 1/8W 1R0 20% G1/G2/G3	1
R114	J707385P918	RES MFLM 1/8W 1R8 20% G4/G5/G6	1
R115	J707385P910	RES MFLM 1/8W 1R0 20% G1/G2/G3	1
R115	J707385P918	RES MFLM 1/8W 1R8 20% G4/G5/G6	1
R116	J707385P121	RES MFLM 1/8W 120R 5%	1
R117	J707385P220	RES MFLM 1/8W 22R 5%	1
R118	J707385P473	RES MFLM 1/8W 47K 5%	1
R119	J707385P820	RES MFLM 1/8W 82R 5%	1
R120	J707385P820	RES MFLM 1/8W 82R 5%	1
R121	J707385P333	RES MFLM 1/8W 33K 5%	1
R122	J707385P221	RES MFLM 1/8W 220R 5%	1
R123	J707385P221	RES MFLM 1/8W 220R 5%	1
R124	J707385P101	RES MFLM 1/8W 100R 5% G1/G2/G3	1
R124	J707385P221	RES MFLM 1/8W 220R 5% G4/G5/G6	1
R125	J707385P330	RES MFLM 1/8W 33R 5%	1
R126	J707385P330	RES MFLM 1/8W 33R 5%	1

Pos	Code No.	Description	Qt
R127	J707385P330	RES MFLM 1/8W 33R 5%	1
R128	J707385P100	RES MFLM 1/8W 10R 5%	1
R129	J707385P121	RES MFLM 1/8W 120R 5% G1/G2/G3	1
R129	J707385P560	RES MFLM 1/8W 56R 5% G4/G5/G6	1
R130	J707385P121	RES MFLM 1/8W 120R 5% G1/G2/G3	1
R130	J707385P560	RES MFLM 1/8W 56R 5% G4/G5/G6	1
R131	J707385P392	RES MFLM 1/8W 3K9 5%	1
R132	J708538P9	RES VAR CERM 200K 20%	1
R133	J708538P4	RES VAR CERM 5K0 20%	1
R134	J707385P100	RES MFLM 1/8W 10R 5%	1
R135	J706147P2	RES THERM PTC 80R 25%	1
R136	J707385P682	RES MFLM 1/8W 6K8 5%	1
R137	J707385P223	RES MFLM 1/8W 22K 5%	1
R138	J707385P472	RES MFLM 1/8W 4K7 5%	1
R139	J707385P472	RES MFLM 1/8W 4K7 5%	1
R140	J707385P333	RES MFLM 1/8W 33K 5%	1
R141	J707385P333	RES MFLM 1/8W 33K 5%	1
R142	J707385P104	RES MFLM 1/8W 100K 5%	1
R143	J707385P222	RES MFLM 1/8W 2K2 5%	1
R144	J707385P222	RES MFLM 1/8W 2K2 5%	1
R145	J707385P223	RES MFLM 1/8W 22K 5%	1
R146	J707385P104	RES MFLM 1/8W 100K 5%	1
R147	J707385P104	RES MFLM 1/8W 100K 5%	1
R148	J707385P123	RES MFLM 1/8W 12K 5%	1
R149	J707385P472	RES MFLM 1/8W 4K7 5%	1
R150	J707385P102	RES MFLM 1/8W 1K0 5%	1
R151	J707385P683	RES MFLM 1/8W 68K 5%	1
R152	J707385P104	RES MFLM 1/8W 100K 5%	1
R153	J707385P472	RES MFLM 1/8W 4K7 5%	1
R154	J707385P274	RES MFLM 1/8W 270K 5%	1
R155	J707385P682	RES MFLM 1/8W 6K8 5%	1
R156	J707385P102	RES MFLM 1/8W 1K0 5%	1
R157	J707385P100	RES MFLM 1/8W 10R 5%	1
R158	J707385P102	RES MFLM 1/8W 1K0 5%	1
R159	J707385P472	RES MFLM 1/8W 4K7 5%	1
R160	J707385P104	RES MFLM 1/8W 100K 5%	1
R161	J709725P1	RES THERM PTC 1K0	1
R162	J707385P220	RES MFLM 1/8W 22R 5%	1
R201	J707385P561	RES MFLM 1/8W 560R 5%	1
R202	J707385P271	RES MFLM 1/8W 270R 5%	1
R203	J707385P153	RES MFLM 1/8W 15K 5%	1
R204	J707385P153	RES MFLM 1/8W 15K 5%	1
R205	J707385P472	RES MFLM 1/8W 4K7 5%	1
R206	J707385P272	RES MFLM 1/8W 2K7 5%	1
R207	J707385P563	RES MFLM 1/8W 56K 5%	1
R208	J707385P563	RES MFLM 1/8W 56K 5%	1
R209	J707385P271	RES MFLM 1/8W 270R 5%	1
R210	J707385P331	RES MFLM 1/8W 330R 5%	1
R301	J707385P331	RES MFLM 1/8W 330R 5%	1
R302	J707385P392	RES MFLM 1/8W 3K9 5%	1
R303	J707385P104	RES MFLM 1/8W 100K 5%	1
R304	J707385P104	RES MFLM 1/8W 100K 5%	1
R306	J707385P272	RES MFLM 1/8W 2K7 5%	1
R307	J707385P681	RES MFLM 1/8W 680R 5%	1
R308	J707385P470	RES MFLM 1/8W 47R 5%	1

Pos	Code No.	Description	Qt
R309	J707385P270	RES MFLM 1/8W 27R 5%	1
R310	J707385P104	RES MFLM 1/8W 100K 5%	1
R311	J707385P101	RES MFLM 1/8W 100R 5%	1
R312	J707385P104	RES MFLM 1/8W 100K 5%	1
R313	J707385P123	RES MFLM 1/8W 12K 5%	1
R314	J707385P104	RES MFLM 1/8W 100K 5%	1
R315	J707385P822	RES MFLM 1/8W 8K2 5%	1
R316	J707385P104	RES MFLM 1/8W 100K 5%	1
R317	J707385P471	RES MFLM 1/8W 470R 5%	1
R318	J707385P100	RES MFLM 1/8W 10R 5%	1
R319	J707385P101	RES MFLM 1/8W 100R 5%	1
R320	J707385P222	RES MFLM 1/8W 2K2 5%	1
R321	J707385P270	RES MFLM 1/8W 27R 5%	1
R322	J707385P471	RES MFLM 1/8W 470R 5%	1
R323	J707385P104	RES MFLM 1/8W 100K 5%	1
R324	J707385P104	RES MFLM 1/8W 100K 5%	1
R325	J707385P100	RES MFLM 1/8W 10R 5%	1
R327	J707385P123	RES MFLM 1/8W 12K 5%	1
R328	J707385P332	RES MFLM 1/8W 3K3 5%	1
R329	J707385P102	RES MFLM 1/8W 1K0 5%	1
R401	J707385P390	RES MFLM 1/8W 39R 5%	1
R402	J707385P100	RES MFLM 1/8W 10R 5%	1
R403	J707385P222	RES MFLM 1/8W 2K2 5%	1
R404	J707385P472	RES MFLM 1/8W 4K7 5%	1
R405	J707385P100	RES MFLM 1/8W 10R 5%	1
R406	J707385P820	RES MFLM 1/8W 82R 5%	1
R407	J707385P470	RES MFLM 1/8W 47R 5%	1
R408	J707385P470	RES MFLM 1/8W 47R 5%	1
R409	J707385P332	RES MFLM 1/8W 3K3 5%	1
R410	J707385P471	RES MFLM 1/8W 470R 5%	1
R411	J707385P123	RES MFLM 1/8W 12K 5%	1
R412	J707385P472	RES MFLM 1/8W 4K7 5%	1
R413	J707385P102	RES MFLM 1/8W 1K0 5%	1
R414	J707385P332	RES MFLM 1/8W 3K3 5%	1
R415	J707385P222	RES MFLM 1/8W 2K2 5%	1
R416	J707385P562	RES MFLM 1/8W 5K6 5%	1
R417	J707385P103	RES MFLM 1/8W 10K 5%	1
R418	J707385P153	RES MFLM 1/8W 15K 5%	1
R419	J707385P182	RES MFLM 1/8W 1K8 5%	1
R420	J707385P182	RES MFLM 1/8W 1K8 5%	1
R421	J707385P182	RES MFLM 1/8W 1K8 5%	1
R422	J707385P473	RES MFLM 1/8W 47K 5%	1
R423	J707385P153	RES MFLM 1/8W 15K 5%	1
R424	J708538P5	RES VAR CERM 10K 20%	1
R425	J707385P272	RES MFLM 1/8W 2K7 5%	1
R426	J707385P333	RES MFLM 1/8W 33K 5% G1/G4	1
R426	J707385P473	RES MFLM 1/8W 47K 5% G2/G3/G5/G6	1
R427	J707385P473	RES MFLM 1/8W 47K 5% G1/G3/G4/G6	1
R427	J707385P393	RES MFLM 1/8W 39K 5% G2/G5	1
R428	J707385P393	RES MFLM 1/8W 39K 5% G1/G4	1
R428	J707385P563	RES MFLM 1/8W 56K 5% G2/G3/G5/G6	1
R429	J707385P104	RES MFLM 1/8W 100K 5%	1

Pos	Code No.	Description	Qt
R430	J709328P447	RES MFLM 1/8W 301K 1% G1/G2/G4/G5	1
R430	J707385P334	RES MFLM 1/8W 330K 5% G3/G6	1
R431	J707385P473	RES MFLM 1/8W 47K 5%	1
R432	J707385P473	RES MFLM 1/8W 47K 5%	1
R433	J707385P271	RES MFLM 1/8W 270R 5%	1
R434	J707385P102	RES MFLM 1/8W 1K0 5%	1
R435	J706147P3	RES THERM PTC 250R 25%	1
R436	J707385P392	RES MFLM 1/8W 3K9 5%	1
R437	J707406P7	RES THERM NTC 220R 10%	1
R438	J707385P222	RES MFLM 1/8W 2K2 5%	1
R439	J707385P392	RES MFLM 1/8W 3K9 5%	1
R440	J707385P392	RES MFLM 1/8W 3K9 5%	1
R441	J707385P101	RES MFLM 1/8W 100R 5%	1
R442	J708538P6	RES VAR CERM 20K 20%	1
R444	J707385P473	RES MFLM 1/8W 47K 5%	1
R445	J707385P273	RES MFLM 1/8W 27K 5%	1
R446	J707385P224	RES MFLM 1/8W 220K 5%	1
R447	J707385P392	RES MFLM 1/8W 3K9 5%	1
R448	J707385P101	RES MFLM 1/8W 100R 5%	1
R449	J707385P470	RES MFLM 1/8W 47R 5%	1
R450	J707385P103	RES MFLM 1/8W 10K 5%	1
R452	J707385P332	RES MFLM 1/8W 3K3 5%	1
R501	J707385P821	RES MFLM 1/8W 820R 5%	1
R502	J707385P821	RES MFLM 1/8W 820R 5%	1
R504	J707385P104	RES MFLM 1/8W 100K 5%	1
R505	J707385P104	RES MFLM 1/8W 100K 5%	1
R508	J707385P103	RES MFLM 1/8W 10K 5%	1
R509	J707385P151	RES MFLM 1/8W 150R 5%	1
R510	J707385P103	RES MFLM 1/8W 10K 5%	1
R512	J707385P561	RES MFLM 1/8W 560R 5%	1
R513	J707385P272	RES MFLM 1/8W 2K7 5%	1
R514	J707385P682	RES MFLM 1/8W 6K8 5%	1
R515	J707385P221	RES MFLM 1/8W 220R 5%	1
R516	J707385P221	RES MFLM 1/8W 220R 5%	1
R517	J707385P101	RES MFLM 1/8W 100R 5%	1
R518	J707385P100	RES MFLM 1/8W 10R 5%	1
R529	J707385P392	RES MFLM 1/8W 3K9 5%	1
R601	J706035P52	RES DEPC 0.1W 180K 5%	1
R602	J707385P122	RES MFLM 1/8W 1K2 5%	1
R603	J707385P122	RES MFLM 1/8W 1K2 5%	1
R605	J707385P104	RES MFLM 1/8W 100K 5%	1
R606	J707385P104	RES MFLM 1/8W 100K 5%	1
R607	J707385P561	RES MFLM 1/8W 560R 5%	1
R608	J707385P682	RES MFLM 1/8W 6K8 5%	1
R609	J707385P332	RES MFLM 1/8W 3K3 5%	1
R610	J707385P331	RES MFLM 1/8W 330R 5%	1
R611	J707385P151	RES MFLM 1/8W 150R 5%	1
R612	J707385P102	RES MFLM 1/8W 1K0 5%	1
R613	J707385P101	RES MFLM 1/8W 100R 5%	1
R614	J707385P272	RES MFLM 1/8W 2K7 5%	1
R615	J707385P682	RES MFLM 1/8W 6K8 5%	1
R616	J707385P181	RES MFLM 1/8W 180R 5%	1
R617	J707385P563	RES MFLM 1/8W 56K 5%	1
R618	J707385P683	RES MFLM 1/8W 68K 5%	1
R619	J707385P104	RES MFLM 1/8W 100K 5%	1
R620	J707385P102	RES MFLM 1/8W 1K0 5%	1
R621	J707385P331	RES MFLM 1/8W 330R 5%	1

Pos	Code No.	Description	Qt
R622	J707385P681	RES MFLM 1/8W 680R 5%	1
R623	J707385P224	RES MFLM 1/8W 220K 5%	1
R624	J707385P223	RES MFLM 1/8W 22K 5%	1
R625	J707385P101	RES MFLM 1/8W 100R 5%	1
R626	J707385P100	RES MFLM 1/8W 10R 5%	1
R627	J707385P103	RES MFLM 1/8W 10K 5%	1
R628	J707385P224	RES MFLM 1/8W 220K 5%	1
R629	J707385P124	RES MFLM 1/8W 120K 5%	1
R630	J707385P100	RES MFLM 1/8W 10R 5%	1
R631	J707385P684	RES MFLM 1/8W 680K 5%	1
R632	J707385P223	RES MFLM 1/8W 22K 5%	1
R633	J707385P824	RES MFLM 1/8W 820K 5%	1
R634	J707385P123	RES MFLM 1/8W 12K 5%	1
R635	J707385P102	RES MFLM 1/8W 1K0 5%	1
R636	J707385P332	RES MFLM 1/8W 3K3 5%	1
R637	J707385P181	RES MFLM 1/8W 180R 5%	1
R638	J707385P474	RES MFLM 1/8W 470K 5%	1
R639	J707385P333	RES MFLM 1/8W 33K 5%	1
R640	J707385P105	RES MFLM 1/8W 1M0 10%	1
R641	J707385P184	RES MFLM 1/8W 180K 5%	1
R642	J707385P184	RES MFLM 1/8W 180K 5%	1
R643	J707385P105	RES MFLM 1/8W 1M0 10%	1
R644	J707385P473	RES MFLM 1/8W 47K 5%	1
R645	J707385P153	RES MFLM 1/8W 15K 5%	1
R646	J707385P393	RES MFLM 1/8W 39K 5%	1
R647	J707385P333	RES MFLM 1/8W 33K 5%	1
R649	J707385P473	RES MFLM 1/8W 47K 5%	1
R650	J707385P562	RES MFLM 1/8W 5K6 5%	1
R651	J707385P473	RES MFLM 1/8W 47K 5%	1
R652	J707385P223	RES MFLM 1/8W 22K 5%	1
R653	J707385P823	RES MFLM 1/8W 82K 5%	1
R654	J707385P153	RES MFLM 1/8W 15K 5%	1
R655	J707385P183	RES MFLM 1/8W 18K 5%	1
R656	J707385P393	RES MFLM 1/8W 39K 5%	1
R657	J707385P823	RES MFLM 1/8W 82K 5%	1
R658	J707385P154	RES MFLM 1/8W 150K 5%	1
R659	J707385P223	RES MFLM 1/8W 22K 5%	1
R660	J707385P333	RES MFLM 1/8W 33K 5%	1
R661	J707385P473	RES MFLM 1/8W 47K 5%	1
R662	J707385P473	RES MFLM 1/8W 47K 5%	1
R663	J708538P6	RES VAR CERM 20K 20%	1
R664	J707385P473	RES MFLM 1/8W 47K 5%	1
R665	J707385P824	RES MFLM 1/8W 820K 5%	1
R666	J707385P124	RES MFLM 1/8W 120K 5%	1
R667	J707385P124	RES MFLM 1/8W 120K 5%	1
R668	J707385P122	RES MFLM 1/8W 1K2 5%	1
R669	J707385P221	RES MFLM 1/8W 220R 5%	1
R670	J707385P103	RES MFLM 1/8W 10K 5%	1
R671	J707385P562	RES MFLM 1/8W 5K6 5%	1
R672	J707385P822	RES MFLM 1/8W 8K2 5%	1
R673	J707385P822	RES MFLM 1/8W 8K2 5%	1
R674	J707385P101	RES MFLM 1/8W 100R 5%	1
R675	J708538P5	RES VAR CERM 10K 20%	1
R676	J707385P562	RES MFLM 1/8W 5K6 5%	1
R677	J708538P5	RES VAR CERM 10K 20%	1
R678	J707385P470	RES MFLM 1/8W 47R 5%	1
R679	J707385P821	RES MFLM 1/8W 820R 5%	1
R680	J708538P7	RES VAR CERM 50K 20%	1
R681	J707385P223	RES MFLM 1/8W 22K 5%	1

PARTS LIST FOR RADIO FREQUENCY BOARD RF633X : M905892GX BD REV. 2

Pos	Code No.	Description	Qt
R682	J707385P152	RES MFLM 1/8W 1K5 5%	1
R683	J707385P223	RES MFLM 1/8W 22K 5%	1
R684	J707385P183	RES MFLM 1/8W 18K 5%	1
R685	J707385P183	RES MFLM 1/8W 18K 5%	1
R686	J707385P103	RES MFLM 1/8W 10K 5%	1
R687	J707385P103	RES MFLM 1/8W 10K 5%	1
R689	J707385P105	RES MFLM 1/8W 1M0 10%	1
R690	J707385P124	RES MFLM 1/8W 120K 5%	1
R691	J707385P273	RES MFLM 1/8W 27K 5%	1
R692	J707385P223	RES MFLM 1/8W 22K 5%	1
R693	J707385P105	RES MFLM 1/8W 1M0 10%	1
R694	J707385P223	RES MFLM 1/8W 22K 5%	1
R695	J707385P105	RES MFLM 1/8W 1M0 10%	1
R696	J707385P223	RES MFLM 1/8W 22K 5%	1
R697	J707385P105	RES MFLM 1/8W 1M0 10%	1
R698	J707385P103	RES MFLM 1/8W 10K 5%	1
R699	J707385P392	RES MFLM 1/8W 3K9 5%	1
R700	J707385P273	RES MFLM 1/8W 27K 5%	1
R702	A701250P413	RES MFLM 1/4W 133K 1%	1
R703	A701250P213	RES MFLM 1/4W 1K33 1%	1
R704	A701250P326	RES MFLM 1/4W 18K2 1%	1
R707	J707385P104	RES MFLM 1/8W 100K 5%	1
R708	J707385P105	RES MFLM 1/8W 1M0 10%	1
R709	J707385P181	RES MFLM 1/8W 180R 5%	1
R710	J707385P101	RES MFLM 1/8W 100R 5%	1
R711	J707385P223	RES MFLM 1/8W 22K 5%	1
R712	J707385P154	RES MFLM 1/8W 150K 5%	1
R713	J707385P821	RES MFLM 1/8W 820R 5%	1
R714	J707385P104	RES MFLM 1/8W 100K 5%	1
R715	J707385P563	RES MFLM 1/8W 56K 5%	1
U100	J708165P2	IC LIN OP-AMP 324	1
U201	J708333P1	IC LIN VR,FIX 4785	1
U401	J707449P1	IC LIN IF-AMP 3357	1
U402	M905766G1	INT CKT SQ 4002 G1/ 4	1
U402	M905766G2	INT CKT SQ 4003 G3/ 6	1
U402	M905766G3	INT CKT SQ 4004 G2/ 5	1
U601	J707859P1	IC LIN OP-AMP 204	1
U602	J707859P1	IC LIN OP-AMP 204	1
U604	J707859P1	IC LIN OP-AMP 204	1
U606	J707243P1	IC DIG REG 4094	1
U607	J707374P1	IC PLL PRESC 8793	1
U608	B800902P1	IC PLL SYN CUSTOM DES	1
U609	J707859P1	IC LIN OP-AMP 204	1
U610	J708503P2	IC LIN CMPAR LM 339	1
U615	J708621P2	CPLR OPTO PC 827	1
U616	J708503P2	IC LIN CMPAR LM 339	1
W003	J707256P1	COIL FIX	1
W004	J707256P1	COIL FIX	1
W005	J708717P1	STRAP	1
W006	J708716P1	STRAP	1
Y401	J707309P1	CRYSTAL UNIT 20.94 OMHZ	1
Y701	J707567P19	CRYSTAL UNIT 7.40 OMHZ	1
Z401	J707310P1	FLTR CRY 21.4 +/-7.5 KHZ G1/G4	1
Z401	J707310P2	FLTR CRY 21.4 +/-6.0 KHZ G2/G5	1
Z401	J707310P3	FLTR CRY 21.4 +/-3.7 KHZ G3/G6	1
Z402	J707446P1	FLTR CER 455K +/-10K Z G1/G4	1
Z402	J707446P3	FLTR CER 455K +/-7.5 HZ G2/G5	1
Z402	J707446P1	FLTR CER 455K +/-4.5 HZ G3/G6	1
Z403	J707446P1	FLTR CER 455K +/-10K Z G1/G4	1
Z403	J707446P3	FLTR CER 455K +/-7.5 HZ G2/G5	1
Z403	J707446P1	FLTR CER 455K +/-4.5 HZ G3/G6	1
	M905893P1R2	BD PW	1
		NON REFERENCED ITEMS:	
	J708561P3	COIL FIXED	3
	K805776P1	CASTING HEAT SINK	1
	K805569G2	SHIELD METALLIZED	1
	J706281P7	CORE SCREW FERR U 25	8
	J706804P2	WASH INS CRYS FOR HC-18/U	4

PARTS LIST FOR RADIO FREQUENCY BOARD RF633X : M905892G1/G2/G3/G4/G5/G6

Pos	Code No.	Description	Qt
		COMPONENTS REVISED SINCE LAST EDITION ARE MARKED ✖	
	M905892G1	RF6332S25 CH. SPAC. 25kHZ/25W OUT	
	M905892G2	RF6333S25 CH. SPAC. 20kHZ/25W OUT	
	M905892G3	RF6334S25 CH. SPAC. 12.5kHZ/25W OUT	
	M905892G4	RF6332S6 CH. SPAC. 25kHZ/6W OUT	
	M905892G5	RF6333S6 CH. SPAC. 20kHZ/6W OUT	
	M905892G6	RF6334S6 CH. SPAC. 12.5kHZ/6W OUT	
C100	J707809P13	CAP CER NPO 10P 5%	1
C101	J707438P4	CAP CER CL2 680P 10%	1
C102	J707438P7	CAP CER CL2 2N2 10%	1
C103	J707436P65	CAP CER NPO 150P 5%	1
C104	J707809P15	CAP CER NPO 15P 5%	1
C105	J707809P17	CAP CER NPO 22P 5%	1
C106	J707809P15	CAP CER NPO 15P 5%	1
C107	J707438P7	CAP CER CL2 2N2 10%	1
C108	J707438P7	CAP CER CL2 2N2 10%	1
C109	J707809P25	CAP CER NPO 100P 5%	1
C110	J707809P23	CAP CER NPO 68P 5% G1/G2/G3	1
C110	J707809P17	CAP CER NPO 22P 5% G4/G5/G6	1
C111	J707438P7	CAP CER CL2 2N2 10%	1
C112	J707438P14	CAP CER CL2 10N 10%	1
C113	J707438P7	CAP CER CL2 2N2 10%	1
C114	J707438P7	CAP CER CL2 2N2 10%	1
C115	J707809P27	CAP CER NPO 150P 5% G1/G2/G3	1
C115	J707809P23	CAP CER NPO 68P 5% G4/G5/G6	1
C116	J707809P27	CAP CER NPO 150P 5% G1/G2/G3	1
C116	J707809P24	CAP CER NPO 82P 5% G4/G5/G6	1
C117	J707809P27	CAP CER NPO 150P 5% G4/G5/G6	1
C118	J707809P27	CAP CER NPO 150P 5% G4/G5/G6	1
C119	J707809P27	CAP CER NPO 150P 5% G4/G5/G6	1
C120	J707353P6	CAP ELECT 4U7 25V	1
C121	J707438P14	CAP CER CL2 10N 10%	1
C122	J707438P7	CAP CER CL2 2N2 10%	1
C123	J707438P14	CAP CER CL2 10N 10%	1
C124	J707438P7	CAP CER CL2 2N2 10%	1
C125	A700006P40	CAP MICA 170P 5% G1/G2/G3	1
C125	A700006P38	CAP MICA 150P 5% G4/G5/G6	1
C126	J709524P59	CAP CER RF 270P 5% G1/G2/G3	1
C126	J709524P49	CAP CER RF 100P 5% G4/G5/G6	1
C127	J709524P51	CAP CER RF 120P 5% G1/G2/G3	1
C127	J709524P45	CAP CER RF 68P 5% G4/G5/G6	1
C128	A700006P35	CAP MICA 110P 5% G1/G2/G3	1
C128	A700006P26	CAP MICA 47P 5% G4/G5/G6	1
C130	J707809P14	CAP CER NPO 12P 5%	1
C131	J707809P13	CAP CER NPO 10P .25P	1
C132	J707809P12	CAP CER NPO 8P2 .25P	1
C133	J707809P13	CAP CER NPO 10P .25P	1
C134	J707353P6	CAP ELECT 4U7 25V	1
C136	J707438P20	CAP CER CL2 33N 10%	1
C137	J707438P7	CAP CER CL2 2N2 10%	1
C138	J707438P7	CAP CER CL2 2N2 10%	1
C139	J707438P7	CAP CER CL2 2N2 10%	1
C140	J707438P7	CAP CER CL2 2N2 10%	1
C141	J707438P7	CAP CER CL2 2N2 10%	1
C142	A700006P14	CAP MICA 18P 5%	1
C143	A700006P26	CAP MICA 47P 5%	1
C144	A700006P26	CAP MICA 47P 5%	1
C145	A700006P18	CAP MICA 24P 5%	1
C146	J707438P7	CAP CER CL2 2N2 10%	1
C147	J707438P7	CAP CER CL2 2N2 10%	1
C148	J707438P7	CAP CER CL2 2N2 10%	1
C149	J707438P7	CAP CER CL2 2N2 10%	1
C150	J707809P10	CAP CER NPO 5P6 .25P G1/G2/G3	1
C150	J707809P12	CAP CER NPO 5P6 .25P G4/G5/G6	1
C151	J707809P10	CAP CER NPO 5P6 .25P G1/G2/G3	1
C151	J707809P12	CAP CER NPO 5P6 .25P G4/G5/G6	1
C152	J707438P7	CAP CER CL2 2N2 10%	1
C153	J707438P7	CAP CER CL2 2N2 10%	1
C154	J707438P7	CAP CER CL2 2N2 10%	1
C155	J707438P7	CAP CER CL2 2N2 10%	1
C156	J707353P3	CAP ELECT 0U47 50V	1
C157	J707438P7	CAP CER CL2 2N2 10%	1
C158	J707438P7	CAP CER CL2 2N2 10%	1
C159	J707438P14	CAP CER CL2 10N 10%	1
C160	J707436P77	CAP CER NPO 470P 5%	1
C161	J707438P7	CAP CER CL2 2N2 10%	1
C162	J707438P14	CAP CER CL2 10N 10%	1
C163	J707438P20	CAP CER CL2 33N 10%	1
C164	J707438P7	CAP CER CL2 2N2 10%	1
C165	J707809P16	CAP CER NPO 18P 5% G1/G2/G3	1
C165	J707809P17	CAP CER NPO 22P 5% G4/G5/G6	1
C166	J707438P5	CAP CER CL2 1N 10%	1

Pos	Code No.	Description	Qt
C167	J707412P13	CAP PYES 470N 10%	1
C168	J707438P7	CAP CER CL2 2N2 10%	1
C169	J707809P1	CAP CER NPO 1P0 .25P	1
C170	J707438P14	CAP CER CL2 10N 10%	1
C171	J707438P14	CAP CER CL2 10N 10%	1
C172	J707438P14	CAP CER CL2 10N 10%	1
C201	J707438P26	CAP CER CL2 100N 10%	1
C202	J707444P8	CAP TA SOL 22U 16V	1
C203	J706005P12	CAP ELECT 47U 40V	1
C204	J707438P7	CAP CER CL2 2N2 10%	1
C205	J707412P9	CAP PYES 100N 10%	1
C206	J707444P4	CAP TA SOL 1U 35V	1
C301	J707436P69	CAP CER NPO 220P 5%	1
C302	J707438P5	CAP CER CL2 1N 10%	1
C304	J707436P10	CAP CER NPO 5P6 .25P	1
C305	J707436P33	CAP CER NPO 27P 5%	1
C306	J707483P4	CAP PHEN 0P56 5%	1
C307	J707438P5	CAP CER CL2 1N 10%	1
C309	J707436P33	CAP CER NPO 27P 5%	1
C310	J707438P5	CAP CER CL2 1N 10%	1
C311	J707436P10	CAP CER NPO 5P6 .25P	1
C312	J707436P87	CAP CER NPO 1N2 5%	1
C315	J707436P10	CAP CER NPO 5P6 .25P	1
C317	J707444P2	CAP TA SOL 0U22 35V	1
C318	J707438P5	CAP CER CL2 1N 10%	1
C319	J707436P33	CAP CER NPO 27P 5%	1
C320	J707438P5	CAP CER CL2 1N 10%	1
C322	J707483P7	CAP PHEN 1P00 5%	1
C323	J707483P6	CAP PHEN 0P82 5%	1
C324	J707436P7	CAP CER NPO 3P3 .25P	1
C325	J707438P5	CAP CER CL2 1N 10%	1
C326	J707436P33	CAP CER NPO 27P 5%	1
C328	J707436P33	CAP CER NPO 27P 5%	1
C331	J707483P6	CAP PHEN 0P82 5%	1
C332	J707436P33	CAP CER NPO 27P 5%	1
C333	J707436P7	CAP CER NPO 3P3 .25P	1
C334	J707436P8	CAP CER NPO 3P9 .25P	1
C335	J707438P5	CAP CER CL2 1N 10%	1
C338	J707436P37	CAP CER NPO 33P 5%	1
C339	J707438P5	CAP CER CL2 1N 10%	1
C340	J707438P8	CAP CER CL2 3N3 10%	1
C345	J707438P5	CAP CER CL2 1N 10%	1
C347	J707438P5	CAP CER CL2 1N 10%	1
C348	J707438P5	CAP CER CL2 1N 10%	1
C350	J707436P10	CAP CER NPO 5P6 .25P	1
C351	J707436P25	CAP CER NPO 18P 5%	1
C353	J707483P8	CAP PHEN 1P20 5%	1
C354	J707436P25	CAP CER NPO 18P 5%	1
C355	J707436P9	CAP CER NPO 4P7 .25P	1
C356	J707438P5	CAP CER CL2 1N 10%	1
C357	J707436P1	CAP CER NPO 1P0 .25P	1
C358	J707436P1	CAP CER NPO 1P0 .25P	1
C359	J707438P5	CAP CER CL2 1N 10%	1
C401	J707438P8	CAP CER CL2 3N3 10%	1
C402	J707438P8	CAP CER CL2 3N3 10%	1
C403	J707438P8	CAP CER CL2 3N3 10%	1
C404	J707436P37	CAP CER NPO 33P 5%	1
C405	J707438P26	CAP CER CL2 100N 10%	1
C406	J707436P10	CAP CER NPO 5P6 .25P	1

Pos	Code No.	Description	Qt
C407	J707436P33	CAP CER NPO 27P 5%	1
C408	J707438P5	CAP CER CL2 1N 10%	1
C409	J707438P8	CAP CER CL2 3N3 10%	1
C410	J707444P8	CAP TA SOL 22U 16V	1
C411	J707438P26	CAP CER CL2 100N 10%	1
C412	J707438P26	CAP CER CL2 100N 10%	1
C413	J707436P37	CAP CER NPO 33P 5%	1
C414	J707438P8	CAP CER CL2 3N3 10%	1
C415	J707436P69	CAP CER NPO 220P 5%	1
C416	J707436P63	CAP CER NPO 120P 5%	1
C417	J707436P33	CAP CER NPO 27P 5%	1
C418	J707438P14	CAP CER CL2 10N 10%	1
C419	J707438P26	CAP CER CL2 100N 10%	1
C420	J707438P14	CAP CER CL2 10N 10%	1
C421	J707438P26	CAP CER CL2 100N 10%	1
C422	J707438P26	CAP CER CL2 100N 10%	1
C423	J707436P13	CAP CER NPO 10P 5%	1
C424	J707438P8	CAP CER CL2 3N3 10%	1
C425	J707412P13	CAP PYES 470N 10%	1
C426	J707436P93	CAP CER NPO 2N2 5%	1
C427	J707436P73	CAP CER NPO 330P 5%	1
C428	J707436P71	CAP CER NPO 270P 5%	1
C428	J707436P69	CAP CER NPO 220P 5%	1
C429	J707438P14	CAP CER CL2 10N 10%	1
C430	J707444P8	CAP TA SOL 22U 16V	1
C431	J707444P8	CAP TA SOL 22U 16V	1
C432	J707438P26	CAP CER CL2 100N 10%	1
C433	J707438P26	CAP CER CL2 100N 10%	1
C434	J707438P8	CAP CER CL2 3N3 10%	1
C435	J707436P1	CAP CER NPO 1P0 .25P	1
C436	J707438P26	CAP CER CL2 100N 10%	1
C437	J707436P45	CAP CER NPO 47P 5%	1
C438	J707438P14	CAP CER CL2 10N 10%	1
C501	J707412P11	CAP PYES 220N 10%	1
C502	J707412P11	CAP PYES 220N 10%	1
C504	A700235P16	CAP CER N150 18P 5%	1
C505	A700235P11	CAP CER N150 6P8 .25P	1
C506	A700235P20	CAP CER N150 39P 5%	1
C507	A700235P19	CAP CER N150 33P 5%	1
C508	A700235P25	CAP CER N150 100P 5%	1
C509	J707436P9	CAP CER NPO 4P7 .25P	1
C512	J707436P8	CAP CER NPO 3P9 .25P	1
C513	J707438P2	CAP CER CL2 330P 10%	1
C514	J707438P6	CAP CER CL2 1N5 10%	1
C517	J707444P6	CAP TA SOL 4U7 35V	1
C518	J707436P2	CAP CER NPO 1P2 .25P	1
C519	J707438P6	CAP CER CL2 1N5 10%	1
C520	J707436P69	CAP CER NPO 220P 5%	1
C521	J707436P29	CAP CER NPO 22P 5%	1
C522	J707438P6	CAP CER CL2 1N5 10%	1
C523	J707436P5	CAP CER NPO 2P2 .25P	1
C524	J707438P3	CAP CER CL2 470P 10%	1
C525	J707438P3	CAP CER CL2 470P 10%	1
C527	J707438P3	CAP CER CL2 470P 10%	1
C528	J707438P26	CAP CER CL2 100N 10%	1
C540	J707438P3	CAP CER CL2 470P 10%	1
C541	J707438P3	CAP CER CL2 470P 10%	1
C543	J707438P3	CAP CER CL2 470P 10%	1
C544	J707438P3	CAP CER CL2 470P 10%	1

Pos	Code No.	Description	Qt
C545	J707436P61	CAP CER NPO 100P 5%	1
C601	J707412P11	CAP PYES 220N 10%	1
C602	J707412P11	CAP PYES 220N 10%	1
C603	J707438P26	CAP CER CL2 100N 10%	1
C604	A700235P13	CAP CER N150 10P 5%	1
C605	A700235P10	CAP CER N150 5P6 .25P	1
C606	A700235P38	CAP CER N150 16P 5%	1
C607	A700235P11	CAP CER N150 6P8 .25P	1
C608	A700233P9	CAP CER CL2 2N2 20%	1
C610	J707436P61	CAP CER NPO 100P 5%	1
C611	J707436P6	CAP CER NPO 2P7 .25P	1
C612	J707438P6	CAP CER CL2 1N5 10%	1
C613	J707444P6	CAP TA SOL 4U7 35V	1
C614	J707438P6	CAP CER CL2 1N5 10%	1
C615	J707438P10	CAP CER CL2 4N7 10%	1
C616	J707438P4	CAP CER CL2 680P 10%	1
C617	J707436P49	CAP CER NPO 56P 5%	1
C618	J707436P1	CAP CER NPO 1P0 .25P	1
C619	J707438P6	CAP CER CL2 1N5 10%	1
C620	J707436P61	CAP CER NPO 100P 5%	1
C621	J707436P21	CAP CER NPO 15P 5%	1
C622	J707436P3	CAP CER NPO 1P5 .25P	1
C623	J707438P26	CAP CER CL2 100N 10%	1
C624	J707436P61	CAP CER NPO 100P 5%	1
C625	J707438P6	CAP CER CL2 1N5 10%	1
C626	J707438P5	CAP CER CL2 1N 10%	1
C627	J707438P26	CAP CER CL2 100N 10%	1
C628	J707436P7	CAP CER NPO 3P3 .25P	1
C629	J707436P65	CAP CER NPO 150P 5%	1
C630	J707438P26	CAP CER CL2 100N 10%	1
C631	J707438P6	CAP CER CL2 1N5 10%	1
C632	J707444P6	CAP TA SOL 4U7 35V	1
C633	J707444P17	CAP TA SOL 47U 10V	1
C634	J707438P26	CAP CER CL2 100N 10%	1
C635	J707438P1	CAP CER CL2 220P 10%	1
C636	J707444P17	CAP TA SOL 47U 10V	1
C637	J707438P26	CAP CER CL2 100N 10%	1
C638	J707438P5	CAP CER CL2 1N 10%	1
C639	J707438P8	CAP CER CL2 3N3 10%	1
C640	J707412P8	CAP PYES 68N 10%	1
C641	J707412P13	CAP PYES 470N 10%	1
C642	J707412P13	CAP PYES 470N 10%	1
C643	J707438P26	CAP CER CL2 100N 10%	1
C644	J707436P6	CAP CER NPO 2P7 .25P	1
C646	J707436P63	CAP CER NPO 120P 5%	1
C647	J707436P13	CAP CER NPO 10P 5%	1
C652	J707438P22	CAP CER CL2 47N 10%	1
C653	J707444P6	CAP TA SOL 4U7 35V	1
C656	J707438P3	CAP CER CL2 470P 10%	1
C657	J707438P3	CAP CER CL2 470P 10%	1
C659	J707438P5	CAP CER CL2 1N 10%	1
C660	J707438P14	CAP CER CL2 10N 10%	1
C666	J707438P3	CAP CER CL2 470P 10%	1
C667	J707438P3	CAP CER CL2 470P 10%	1
C701	J707436P29	CAP CER NPO 22P 5%	1
C702	J708702P22	CAP CER N750 56P 5%	1
C703	J707436P69	CAP CER NPO 220P 5%	1
C705	J707438P5	CAP CER CL2 1N 10%	1
C706	J707438P14	CAP CER CL2 10N 10%	1

Pos	Code No.	Description	Qt
C707	J707436P10	CAP CER NPO 5P6 .25P	1
C708	J707438P14	CAP CER CL2 10N 10%	1
C709	J707438P14	CAP CER CL2 10N 10%	1
D100	A700047P3	DIO SI SIG 1N6263	1
D101	J706892P1	DIO SI PIN UM 9401	1
D102	J706892P1	DIO SI PIN UM 9401	1
D103	J707390P1	DIO SI SIG BAV 74	1
D300	J707928P2	DIO SI CAP BB 809	1
D301	J707928P2	DIO SI CAP BB 809	1
D302	J707928P2	DIO SI CAP BB 809	1
D303	J707928P2	DIO SI CAP BB 809	1
D304	J707928P2	DIO SI CAP BB 809	1
D305	J707928P2	DIO SI CAP BB 809	1
D306	J707928P2	DIO SI CAP BB 809	1
D307	J707928P2	DIO SI CAP BB 809	1
D401	A700025P8	DIO SI ZENR 6V8 5% 0.4W	1
D501	J707928P2	DIO SI CAP BB 809	1
D502	J707928P2	DIO SI CAP BB 809	1
D503	J707928P2	DIO SI CAP BB 809	1
D504	J707928P2	DIO SI CAP BB 809	1
D505	J707928P2	DIO SI CAP BB 809	1
D506	J707769P1	DIO SI CAP BBY 31	1
D601	J707928P2	DIO SI CAP BB 809	1
D602	J707928P2	DIO SI CAP BB 809	1
D603	J709536P1	DIO SI CAP MV 2111	1
D604	J709536P1	DIO SI CAP MV 2111	1
D605	J707389P1	DIO SI SIG BAV 99	1
D606	J708681P1	DIO SI SIG BAW 56	1
D607	J707390P1	DIO SI SIG BAV 74	1
D608	J707390P1	DIO SI SIG BAV 74	1
D610	J708681P1	DIO SI SIG BAW 56	1
D701	A700073P1	DIO SI CAP BB 409	1
D702	J707390P1	DIO SI SIG BAV 74	1
L100	K805653G9	COIL ASM 9 1/2T	1
L101	A700024P7	COIL RF FIX 0.33UH 10%	1
L102	A700024P3	COIL RF FIX 0.15UH 10%	1
L103	A700024P12	COIL RF FIX 0.82UH 10%	1
L104	K805653G2	COIL ASM 2 1/2T	1
L105	K805653G5	COIL ASM 5 1/2T G1/G2/G3	1
L105	K805653G8	COIL ASM 8 1/2T G4/G5/G6	1
L106	J707339G1	COIL FIX ASM	1
L107	K805653G4	COIL ASM 4 1/2T	1
L108	A700024P3	COIL RF FIX 0.15UH 10%	1
L109	J707256P2	COIL FIX	1
L110	J709287P1	CORE TOR FERR	1
L111	J707256P1	COIL FIX G1/G2/G3	1
L111	J707256G1	COIL ASM 1 1/2T G4/G5/G6	1
L113	A700024P3	COIL RF FIX 0.15UH 10%	1
L114	J709287P1	CORE TOR FERR	1
L115	J707256P2	COIL FIX	1
L116	J709287P1	CORE TOR FERR	1
L117	J709603P2	COIL G1/G2/G3	1
L117	J709603P6	COIL ASM 1 1/2T G4/G5/G6	1
L118	J709603P1	COIL G1/G2/G3	1
L118	J709603P6	COIL FIX G4/G5/G6	1
L121	A700024P18	COIL RF FIX 2.7UH 10%	1
L122	A700024P25	COIL RF FIX 10UH 10%	1
L123	A700024P25	COIL RF FIX 10UH 10%	1
L124	K805653G7	COIL ASM 7 1/2 T	1

Pos	Code No.	Description	Qt
L125	K805653G7	COIL ASM 7 1/2 T	1
L126	K805653G8	COIL ASM 8 1/2T	1
L127	A700024P25	COIL RF FIX 10UH 10%	1
L128	A700024P25	COIL RF FIX 10UH 10%	1
L301	J709099P8	COIL RF VAR 7-1/2T	1
L302	J709099P15	COIL RF VAR 7-1/2T TAP	1
L303	J707486P11	COIL RF FIX 2.2UH 10%	1
L304	J709099P8	COIL RF VAR 7-1/2T	1
L305	J707486P2	COIL RF FIX 3.3UH 10%	1
L306	J709099P8	COIL RF VAR 7-1/2T	1
L308	J709099P8	COIL RF VAR 7-1/2T	1
L310	J709099P9	COIL RF VAR 7-1/2T TAP	1
L312	J708428P1	COIL RF VAR 45 MHZ	1
L313	J709099P12	COIL RF VAR 5-1/2T TAP	1
L314	J709099P14	COIL RF VAR 5-1/2T TAP	1
L401	J707486P3	COIL RF FIX 6.8UH 10%	1
L403	K805570G6	COIL AS M	1
L405	J708428P1	COIL RF VAR 45 MHZ	1
L406	K805570G5	COIL ASM	1
L407	A700024P25	COIL RF FIX 10UH 10%	1
L408	J708428P1	COIL RF VAR 45 MHZ	1
L409	J707431P1	COIL RF VAR 455KHZ 25%	1
L410	J707431P1	COIL RF VAR 455KHZ 25%	1
L501	A700024P21	COIL RF FIX 4.7UH 10%	1
L502	A700024P21	COIL RF FIX 4.7UH 10%	1
L504	A700024P21	COIL RF FIX 4.7UH 10%	1
L505	L855671P2	COIL RADIO FREQUENCY	1
L506	A700024P21	COIL RF FIX 4.7UH 10%	1
L508	A700024P5	COIL RF FIX 0.22UH 10%	1
L601	A700024P21	COIL RF FIX 4.7UH 10%	1
L602	A700024P21	COIL RF FIX 4.7UH 10%	1
L604	A700024P21	COIL RF FIX 4.7UH 10%	1
L605	L855671P2	COIL RA DIO FREQUENCY	1
L606	A700024P21	COIL RF FIX 4.7UH 10%	1
L607	A700024P4	COIL RF FIX 0.18UH 10%	1
L701	K805570G7	COIL ASM	1
L702	A700024P43	COIL RF FIX 330UH 10%	1
L703	A700024P27	COIL RF FIX 15UH 10%	1
P102	J707064P112	CONN PWB FEM 12-CKT	1
P105	A701883P4	CONN PWB FEM RECP	1
Q100	J707388P1	TSTR NPN SI BFR 53	1
Q101	A701940P1	TSTR NPN SI RF-PWR 0.4W	1
Q102	J709517P1	TSTR NPN SI RF-PWR 3W	1
Q103	J709162P1	TSTR NPN SI RF-PWR 27W G1/G2/G3	1
Q103	J709163P1	TSTR NPN SI RF-PWR 10W G4/G5/G6	1
Q106	J707432P1	TSTR PNP SI BCX 18	1
Q107	J707386P1	TSTR NPN SI BCW 32	1
Q108	J708406P1	TSTR NPN SI BD 233	1
Q109	J707386P1	TSTR NPN SI BCW 32	1
Q201	J707435P1	TSTR PNP SI BC 369	1
Q202	J707386P1	TSTR NPN SI BCW 32	1
Q203	J707432P1	TSTR PNP SI BCX 18	1
Q204	J707386P1	TSTR NPN SI BCW 32	1
Q301	J706011P2	TSTR NPN SI BFR 91A	1
Q302	J707817P1	TSTR JFET SI J 309	1
Q401	J707817P1	TSTR JFET SI J 309	1
Q402	J707817P1	TSTR JFET SI J 309	1
Q403	J707419P1	TSTR JFET SI BF511	1
Q404	J708418P1	TSTR NPN SI BFS 20	1
Q405	J708418P1	TSTR NPN SI BFS 20	1
Q407	J707386P1	TSTR NPN SI BCW 32	1
Q408	J707387P1	TSTR PNP SI BCW 30	1
Q501	J707817P1	TSTR JFET SI J 309	1
Q502	J708318P1	TSTR PNP SI BFT 92	1
Q601	J707817P1	TSTR JFET SI J 309	1
Q603	J708318P1	TSTR PNP SI BFT 92	1
Q604	J707433P1	TSTR MFET SI BF 989	1
Q605	J707386P1	TSTR NPN SI BCW 32	1
Q612	J707386P1	TSTR NPN SI BCW 32	1
Q613	J707386P1	TSTR NPN SI BCW 32	1
Q701	J707419P1	TSTR JFET SI BF511	1
Q702	J707387P1	TSTR PNP SI BCW 30	1
R000	J707385P332	RES MFLM 1/8W 3K3 5% G4/G5/G6	1
R100	J707385P101	RES MFLM 1/8W 100R 5%	1
R101	J707385P470	RES MFLM 1/8W 47R 5%	1
R102	J707385P471	RES MFLM 1/8W 470R 5%	1
R103	J707385P390	RES MFLM 1/8W 39R 5%	1
R104	J707385P331	RES MFLM 1/8W 330R 5%	1
R105	J707385P122	RES MFLM 1/8W 1K2 5%	1
R106	J707385P100	RES MFLM 1/8W 10R 5%	1
R107	J707385P100	RES MFLM 1/8W 10R 5%	1
R108	J707385P560	RES MFLM 1/8W 56R 5%	1
R109	J707385P100	RES MFLM 1/8W 10R 5%	1
R110	J707385P100	RES MFLM 1/8W 10R 5% G1/G2/G3	1
R110	J707385P910	RES MFLM 1/8W 1R0 20% G4/G5/G6	1
R111	J707385P220	RES MFLM 1/8W 22R 5%	1
R112	J707385P947	RES MFLM 1/8W 4R7 20%	1
R113	J707385P100	RES MFLM 1/8W 10R 5%	1
R114	J707385P910	RES MFLM 1/8W 1R0 20% G1/G2/G3	1
R114	J707385P918	RES MFLM 1/8W 1R8 20% G4/G5/G6	1
R115	J707385P910	RES MFLM 1/8W 1R0 20% G1/G2/G3	1
R115	J707385P918	RES MFLM 1/8W 1R8 20% G4/G5/G6	1
R116	J707385P121	RES MFLM 1/8W 120R 5%	1
R117	J707385P220	RES MFLM 1/8W 22R 5%	1
R118	J707385P473	RES MFLM 1/8W 47K 5%	1
R119	J707385P820	RES MFLM 1/8W 82R 5%	1
R120	J707385P820	RES MFLM 1/8W 82R 5%	1
R121	J707385P333	RES MFILM 1/8W 33K 5%	1
R122	J707385P221	RES MFLM 1/8W 220R 5%	1
R123	J707385P221	RES MFLM 1/8W 220R 5%	1
R124	J707385P101	RES MFLM 1/8W 100R 5% G1/G2/G3	1
R124	J707385P221	RES MFLM 1/8W 220R 5% G4/G5/G6	1
R125	J707385P330	RES MFLM 1/8W 33R 5%	1
R126	J707385P330	RES MFLM 1/8W 33R 5%	1
R127	J707385P330	RES MFLM 1/8W 33R 5%	1
R128	J707385P100	RES MFLM 1/8W 10R 5%	1

PARTS LIST FOR RADIO FREQUENCY BOARD RF633X : M905892G1/G2/G3/G4/G5/G6

Pos	Code No.	Description	Qt
R129	J707385P121	RES MFLM 1/8W 120R 5% G1/G2/G3	1
R129	J707385P560	RES MFLM 1/8W 56R 5% G4/G5/G6	1
R130	J707385P121	RES MFLM 1/8W 120R 5% G1/G2/G3	1
R130	J707385P560	RES MFLM 1/8W 56R 5% G4/G5/G6	1
R131	J707385P392	RES MFLM 1/8W 3K9 5%	1
R132	J708538P9	RES VAR CERM 200K 20%	1
R133	J708538P4	RES VAR CERM 5K0 20%	1
R134	J707385P100	RES MFLM 1/8W 10R 5%	1
R135	J706147P2	RES THERM PTC 80R 25%	1
R136	J707385P682	RES MFLM 1/8W 6K8 5%	1
R137	J707385P223	RES MFLM 1/8W 22K 5%	1
R138	J707385P472	RES MFLM 1/8W 4K7 5%	1
R139	J707385P472	RES MFLM 1/8W 4K7 5%	1
R140	J707385P333	RES MFLM 1/8W 33K 5%	1
R141	J707385P333	RES MFLM 1/8W 33K 5%	1
R142	J707385P104	RES MFLM 1/8W 100K 5%	1
R143	J707385P222	RES MFLM 1/8W 2K2 5%	1
R144	J707385P222	RES MFLM 1/8W 2K2 5%	1
R145	J707385P223	RES MFLM 1/8W 22K 5%	1
R146	J707385P104	RES MFLM 1/8W 100K 5%	1
R147	J707385P104	RES MFLM 1/8W 100K 5%	1
R148	J707385P123	RES MFLM 1/8W 12K 5%	1
R149	J707385P472	RES MFLM 1/8W 4K7 5%	1
R150	J707385P102	RES MFLM 1/8W 1K0 5%	1
R151	J707385P683	RES MFLM 1/8W 68K 5%	1
R152	J707385P104	RES MFLM 1/8W 100K 5%	1
R153	J707385P472	RES MFLM 1/8W 4K7 5%	1
R154	J707385P274	RES MFLM 1/8W 270K 5%	1
R155	J707385P682	RES MFLM 1/8W 6K8 5%	1
R156	J707385P102	RES MFLM 1/8W 1K0 5%	1
R157	J707385P100	RES MFLM 1/8W 10R 5%	1
R158	J707385P102	RES MFLM 1/8W 1K0 5%	1
R159	J707385P472	RES MFLM 1/8W 4K7 5%	1
R160	J707385P104	RES MFLM 1/8W 100K 5%	1
R161	J709725P1	RES THERM PTC 1K0	1
R162	J707385P220	RES MFLM 1/8W 22R 5%	1
R201	J707385P561	RES MFLM 1/8W 560R 5%	1
R202	J707385P271	RES MFLM 1/8W 270R 5%	1
R203	J707385P153	RES MFLM 1/8W 15K 5%	1
R204	J707385P153	RES MFLM 1/8W 15K 5%	1
R205	J707385P472	RES MFLM 1/8W 4K7 5%	1
R206	J707385P272	RES MFLM 1/8W 2K7 5%	1
R207	J707385P563	RES MFLM 1/8W 56K 5%	1
R208	J707385P563	RES MFLM 1/8W 56K 5%	1
R209	J707385P271	RES MFLM 1/8W 270R 5%	1
R210	J707385P331	RES MFLM 1/8W 330R 5%	1
R301	J707385P331	RES MFLM 1/8W 330R 5%	1
R302	J707385P392	RES MFLM 1/8W 3K9 5%	1
R303	J707385P104	RES MFLM 1/8W 100K 5%	1
R304	J707385P104	RES MFLM 1/8W 100K 5%	1
R306	J707385P272	RES MFLM 1/8W 2K7 5%	1
R307	J707385P681	RES MFLM 1/8W 680R 5%	1
R308	J707385P470	RES MFLM 1/8W 47R 5%	1
R309	J707385P270	RES MFLM 1/8W 27R 5%	1
R310	J707385P104	RES MFLM 1/8W 100K 5%	1

Pos	Code No.	Description	Qt
R311	J707385P101	RES MFLM 1/8W 100R 5%	1
R312	J707385P104	RES MFLM 1/8W 100K 5%	1
R313	J707385P123	RES MFLM 1/8W 12K 5%	1
R314	J707385P104	RES MFLM 1/8W 100K 5%	1
R315	J707385P822	RES MFLM 1/8W 8K2 5%	1
R316	J707385P104	RES MFLM 1/8W 100K 5%	1
R317	J707385P471	RES MFLM 1/8W 470R 5%	1
R318	J707385P100	RES MFLM 1/8W 10R 5%	1
R319	J707385P101	RES MFLM 1/8W 100R 5%	1
R320	J707385P222	RES MFLM 1/8W 2K2 5%	1
R321	J707385P270	RES MFLM 1/8W 27R 5%	1
R322	J707385P471	RES MFLM 1/8W 470R 5%	1
R323	J707385P104	RES MFLM 1/8W 100K 5%	1
R324	J707385P104	RES MFLM 1/8W 100K 5%	1
R325	J707385P100	RES MFLM 1/8W 10R 5%	1
R327	J707385P123	RES MFLM 1/8W 12K 5%	1
R328	J707385P332	RES MFLM 1/8W 3K3 5%	1
R329	J707385P102	RES MFLM 1/8W 1K0 5%	1
R401	J707385P390	RES MFLM 1/8W 39R 5%	1
R402	J707385P100	RES MFLM 1/8W 10R 5%	1
R403	J707385P222	RES MFLM 1/8W 2K2 5%	1
R404	J707385P472	RES MFLM 1/8W 4K7 5%	1
R405	J707385P100	RES MFLM 1/8W 10R 5%	1
R406	J707385P820	RES MFLM 1/8W 82R 5%	1
R407	J707385P470	RES MFLM 1/8W 47R 5%	1
R408	J707385P470	RES MFLM 1/8W 47R 5%	1
R409	J707385P332	RES MFLM 1/8W 3K3 5%	1
R410	J707385P471	RES MFLM 1/8W 470R 5%	1
R411	J707385P123	RES MFLM 1/8W 12K 5%	1
R412	J707385P472	RES MFLM 1/8W 4K7 5%	1
R413	J707385P102	RES MFLM 1/8W 1K0 5%	1
R414	J707385P332	RES MFLM 1/8W 3K3 5%	1
R415	J707385P222	RES MFLM 1/8W 2K2 5%	1
R416	J707385P562	RES MFLM 1/8W 5K6 5%	1
R417	J707385P103	RES MFLM 1/8W 10K 5%	1
R418	J707385P153	RES MFLM 1/8W 15K 5%	1
R419	J707385P182	RES MFLM 1/8W 1K8 5%	1
R420	J707385P182	RES MFLM 1/8W 1K8 5%	1
R421	J707385P182	RES MFLM 1/8W 1K8 5%	1
R422	J707385P473	RES MFLM 1/8W 47K 5%	1
R423	J707385P153	RES MFLM 1/8W 15K 5%	1
R424	J708538P5	RES VAR CERM 10K 20%	1
R425	J707385P272	RES MFLM 1/8W 2K7 5%	1
R426	J707385P333	RES MFLM 1/8W 33K 5% G1/G4	1
R426	J707385P473	RES MFLM 1/8W 47K 5% G2/G3/G5/G6	1
R427	J707385P473	RES MFLM 1/8W 47K 5% G1/G2/G4/G5	1
R427	J707385P393	RES MFLM 1/8W 39K 5% G2/G5	1
R428	J707385P393	RES MFLM 1/8W 39K 5% G1/G4	1
R428	J707385P563	RES MFLM 1/8W 56K 5% G2/G3/G5/G6	1
R429	J707385P104	RES MFLM 1/8W 100K 5%	1
R430	J709329P447	RES MFLM 1/8W 301K 5% G1/G2/G4/G5	1
R430	J707385P334	RES MFLM 1/8W 330K 5% G3/G6	1
R431	J707385P473	RES MFLM 1/8W 47K 5%	1
R432	J707385P473	RES MFLM 1/8W 47K 5%	1
R433	J707385P271	RES MFLM 1/8W 270R 5%	1

Pos	Code No.	Description	Qt
R434	J707385P102	RES MFLM 1/8W 1K0 5%	1
R435	J706147P3	RES THERM PTC 250R 25%	1
R436	J707385P392	RES MFLM 1/8W 3K9 5%	1
R437	J707406P7	RES THERM NTC 220R 10%	1
R438	J707385P222	RES MFLM 1/8W 2K2 5%	1
R439	J707385P392	RES MFLM 1/8W 3K9 5%	1
R440	J707385P392	RES MFLM 1/8W 3K9 5%	1
R441	J707385P101	RES MFLM 1/8W 100R 5%	1
R442	J708538P6	RES VAR CERM 20K 20%	1
R444	J707385P473	RES MFLM 1/8W 47K 5%	1
R445	J707385P273	RES MFLM 1/8W 27K 5%	1
R446	J707385P224	RES MFLM 1/8W 220K 5%	1
R447	J707385P392	RES MFLM 1/8W 3K9 5%	1
R448	J707385P101	RES MFLM 1/8W 100R 5%	1
R449	J707385P470	RES MFLM 1/8W 47R 5%	1
R450	J707385P103	RES MFLM 1/8W 10K 5%	1
R452	J707385P332	RES MFLM 1/8W 3K3 5%	1
R501	J707385P821	RES MFLM 1/8W 820R 5%	1
R502	J707385P821	RES MFLM 1/8W 820R 5%	1
R504	J707385P104	RES MFLM 1/8W 100K 5%	1
R505	J707385P104	RES MFLM 1/8W 100K 5%	1
R508	J707385P103	RES MFLM 1/8W 10K 5%	1
R509	J707385P151	RES MFLM 1/8W 150R 5%	1
R510	J707385P103	RES MFLM 1/8W 10K 5%	1
R512	J707385P561	RES MFLM 1/8W 560R 5%	1
R513	J707385P272	RES MFLM 1/8W 2K7 5%	1
R514	J707385P682	RES MFLM 1/8W 6K8 5%	1
R515	J707385P221	RES MFLM 1/8W 220R 5%	1
R516	J707385P221	RES MFLM 1/8W 220R 5%	1
R517	J707385P101	RES MFLM 1/8W 100R 5%	1
R518	J707385P100	RES MFLM 1/8W 10R 5%	1
R529	J707385P392	RES MFLM 1/8W 3K9 5%	1
R601	J706035P52	RES MFLM 1/8W 180k 5%	1
R602	J707385P122	RES MFLM 1/8W 1K2 5%	1
R603	J707385P122	RES MFLM 1/8W 1K2 5%	1
R605	J707385P104	RES MFLM 1/8W 100K 5%	1
R606	J707385P104	RES MFLM 1/8W 100K 5%	1
R607	J707385P561	RES MFLM 1/8W 560R 5%	1
R608	J707385P682	RES MFLM 1/8W 6K8 5%	1
R609	J707385P332	RES MFLM 1/8W 3K3 5%	1
R610	J707385P331	RES MFLM 1/8W 330R 5%	1
R611	J707385P151	RES MFLM 1/8W 150R 5%	1
R612	J707385P102	RES MFLM 1/8W 1K0 5%	1
R613	J707385P101	RES MFLM 1/8W 100R 5%	1
R614	J707385P272	RES MFLM 1/8W 2K7 5%	1
R615	J707385P682	RES MFLM 1/8W 6K8 5%	1
R616	J707385P104	RES MFLM 1/8W 100K 5%	1
R617	J707385P102	RES MFLM 1/8W 1K0 5%	1
R618	J707385P331	RES MFLM 1/8W 330R 5%	1
R619	J707385P681	RES MFLM 1/8W 680R 5%	1
R620	J707385P224	RES MFLM 1/8W 220K 5%	1
R621	J707385P223	RES MFLM 1/8W 22K 5%	1
R622	J707385P101	RES MFLM 1/8W 100R 5%	1
R623	J707385P100	RES MFLM 1/8W 10R 5%	1
R624	J707385P103	RES MFLM 1/8W 10K 5%	1
R625	J707385P224	RES MFLM 1/8W 220K 5%	1
R626	J707385P124	RES MFLM 1/8W 120K 5%	1
R627	J707385P100	RES MFLM 1/8W 10R 5%	1
R628	J707385P684	RES MFLM 1/8W 680K 5%	1

Pos	Code No.	Description	Qt
R629	J707385P223	RES MFLM 1/8W 22K 5%	1
R630	J707385P824	RES MFLM 1/8W 820K 5%	1
R631	J707385P123	RES MFLM 1/8W 12K 5%	1
R632	J707385P102	RES MFLM 1/8W 1K0 5%	1
R633	J707385P332	RES MFLM 1/8W 3K3 5%	1
R634	J707385P181	RES MFLM 1/8W 180R 5%	1
R635	J707385P474	RES MFLM 1/8W 470K 5%	1
R636	J707385P333	RES MFLM 1/8W 33K 5%	1
R637	J707385P105	RES MFLM 1/8W 1M0 10%	1
R638	J707385P184	RES MFLM 1/8W 180K 5%	1
R639	J707385P184	RES MFLM 1/8W 180K 5%	1
R640	J707385P105	RES MFLM 1/8W 1M0 10%	1
R641	J707385P473	RES MFLM 1/8W 47K 5%	1
R642	J707385P153	RES MFLM 1/8W 15K 5%	1
R643	J707385P393	RES MFLM 1/8W 39K 5%	1
R644	J707385P333	RES MFLM 1/8W 33K 5%	1
R645	J707385P473	RES MFLM 1/8W 47K 5%	1
R646	J707385P562	RES MFLM 1/8W 5K6 5%	1
R647	J707385P473	RES MFLM 1/8W 47K 5%	1
R649	J707385P223	RES MFLM 1/8W 22K 5%	1
R650	J707385P823	RES MFLM 1/8W 82K 5%	1
R651	J707385P153	RES MFLM 1/8W 15K 5%	1
R652	J707385P183	RES MFLM 1/8W 18K 5%	1
R653	J707385P393	RES MFLM 1/8W 39K 5%	1
R654	J707385P823	RES MFLM 1/8W 82K 5%	1
R655	J707385P154	RES MFLM 1/8W 150K 5%	1
R656	J707385P223	RES MFLM 1/8W 22K 5%	1
R657	J707385P333	RES MFLM 1/8W 33K 5%	1
R658	J707385P473	RES MFLM 1/8W 47K 5%	1
R659	J707385P473	RES MFLM 1/8W 47K 5%	1
R660	J708538P6	RES VAR CERM 20K 20%	1
R661	J707385P473	RES MFLM 1/8W 47K 5%	1
R662	J707385P824	RES MFLM 1/8W 820K 5%	1
R663	J707385P124	RES MFLM 1/8W 120K 5%	1
R664	J707385P124	RES MFLM 1/8W 120K 5%	1
R665	J707385P122	RES MFLM 1/8W 1K2 5%	1
R666	J707385P221	RES MFLM 1/8W 220R 5%	1
R667	J707385P103	RES MFLM 1/8W 10K 5%	1
R668	J707385P562	RES MFLM 1/8W 5K6 5%	1
R669	J707385P822	RES MFLM 1/8W 8K2 5%	1
R670	J707385P822	RES MFLM 1/8W 8K2 5%	1
R671	J707385P101	RES MFLM 1/8W 100R 5%	1
R672	J708538P5	RES VAR CERM 10K 20%	1
R673	J707385P562	RES MFLM 1/8W 5K6 5%	1
R674	J708538P5	RES VAR CERM 10K 20%	1
R675	J707385P470	RES MFLM 1/8W 47R 5%	1
R676	J707385P821	RES MFLM 1/8W 820R 5%	1
R677	J708538P7	RES VAR CERM 50K 20%	1
R678	J707385P223	RES MFLM 1/8W 22K 5%	1
R679	J707385P152	RES MFLM 1/8W 1K5 5%	1
R680	J707385P223	RES MFLM 1/8W 22K 5%	1
R681	J707385P183	RES MFLM 1/8W 18K 5%	1
R682	J707385P183	RES MFLM 1/8W 18K 5%	1
R683	J707385P103	RES MFLM 1/8W 10K 5%	1
R684	J707385P103	RES MFLM 1/8W 10K 5%	1
R685	J707385P105	RES MFLM 1/8W 1M0 10%	1
R686	J707385P124	RES MFLM 1/8W 120K 5%	1
R687	J707385P273	RES MFLM 1/8W 27K 5%	1
R689	J707385P223	RES MFLM 1/8W 22K 5%	1

PARTS LIST FOR RADIO FREQUENCY BOARD RF633X : M905892G1/G2/G3/G4/G5/G6

Pos	Code No.	Description	Qt
R690	J707385P105	RES MFLM 1/8W 1M0 10%	1
R691	J707385P223	RES MFLM 1/8W 22K 5%	1
R692	J707385P105	RES MFLM 1/8W 1M0 10%	1
R693	J707385P223	RES MFLM 1/8W 22K 5%	1
R694	J707385P105	RES MFLM 1/8W 1M0 10%	1
R695	J707385P105	RES MFLM 1/8W 1M0 10% *	1
R696	J707385P223	RES MFLM 1/8W 22K 5% *	1
R697	J707385P105	RES MFLM 1/8W 1M0 10% *	1
R698	J707385P103	RES MFLM 1/8W 10K 5%	1
R699	J707385P392	RES MFLM 1/8W 3K9 5%	1
R702	A701250P413	RES MFILM 133K 1% 1/4W	1
R703	A701250P213	RES MFILM 1K33 1% 1/4W	1
R704	A701250P326	RES MFILM 18K2 1% 1/4W	1
R707	J707385P104	RES MFLM 1/8W 100K 5%	1
R708	J707385P105	RES MFLM 1/8W 1M0 10%	1
R709	J707385P181	RES MFLM 1/8W 180R 5%	1
R710	J707385P101	RES MFLM 1/8W 100R 5%	1
R711	J707385P223	RES MFLM 1/8W 22K 5%	1
R712	J707385P154	RES MFLM 1/8W 150K 5%	1
R713	J707385P821	RES MFLM 1/8W 820R 5%	1
R714	J707385P104	RES MFLM 1/8W 100K 5%	1
R715	J707385P563	RES MFLM 1/8W 56K 5%	1
U100	J708165P2	IC LIN OP-AMP 324	1
U201	J708333P1	IC LIN VR FIX 4785	1
U401	J707449P1	IC LIN IF-AMP 3357	1
U402	M905766G1	INT CKT SQ 4002 G1/G2/G5/G4	1
U402	M905766G2	INT CKT SQ 4003 G6/G3	1
U601	J707859P1	IC LIN OP-AMP 204	1
U602	J707859P1	IC LIN OP-AMP 204	1
U604	J707859P1	IC LIN OP-AMP 204	1
U606	J707243P1	IC DIG REG 4094	1
U607	J707374P1	IC PLL PRESC 8793	1
U608	B800902P1	IC PLL SYN CUSTOM DES	1
U609	J707859P1	IC LIN OP-AMP 204	1
U610	J708503P2	IC LIN CMPAR LM 339	1
U615	J708621P2	CPLR OPTO PC 827	1
U616	J708503P2	IC LIN CMPAR LM 339	1
W003	J707256P1	COIL FIX	1
W004	J707256P1	COIL FIX	1
W005	J708717P1	STRAP	1
W006	J708716P1	STRAP	1
Y401	J707309P1	CRYSTAL UNIT 20.9450MHZ	1
Y701	J707567P19	CRYSTAL UNIT 7.4000MHZ	1
Z401	J707310P1	FLTR CRY 21.4 +/-7.50KHZ G1/G4	1
Z401	J707310P2	FLTR CRY 21.4 +/-7.50KHZ G2/G5	1
Z401	J707310P3	FLTR CRY 21.4 +/-3.75KHZ G3/G6	1
Z402	J707446P1	FLTR CER 455K +/-10KHZ G1/G4	1
Z402	J707446P3	FLTR CER 455K +/-7.5KHZ G2/G5	1
Z402	J707446P4	FLTR CER 455K +/-4.5KHZ G3/G6	1
Z403	J707446P1	FLTR CER 455K +/-10KHZ G1/G4	1
Z403	J707446P3	FLTR CER 455K +/-7.5KHZ G2/G5	1
Z403	J707446P4	FLTR CER 455K +/-4.5KHZ G3/G6	1
	M905893P1R2	BD PW	1
		NON REFERENCED ITEMS:	
	J708561P3	COIL FIX	1
	K805776P1	CASTING HEAT SINK	1
	K805569G2	SHIELD METALLIZED	1
	J706281P7	CORE SCREW FERR U 25	8
	J706804P2	WASH INS CRYS FOR HC-18/U	4

Pos	Code No	Description	Qt
	M905892G1	RF6332S25 CH. SPAC. 25kHZ/25W OUT	
	M905892G2	RF6333S25 CH. SPAC. 20kHZ/25W OUT	
	M905892G3	RF6334S25 CH. SPAC. 12.5kHZ/25W OUT	
	M905892G4	RF6332S6 CH. SPAC. 25kHZ/6W OUT	
	M905892G5	RF6333S6 CH. SPAC. 20kHZ/6W OUT	
	M905892G6	RF6334S6 CH. SPAC. 12.5kHZ/6W OUT	
C100	J707809P13	CAP CER NPO 10P 5%	1
C101	J707438P4	CAP CER CL2 680P 10%	1
C102	J707438P7	CAP CER CL2 2N2 10%	1
C103	J707436P65	CAP CER NPO 150P 5%	1
C104	J707809P15	CAP CER NPO 15P 5%	1
C105	J707809P17	CAP CER NPO 22P 5%	1
C106	J707809P15	CAP CER NPO 15P 5%	1
C107	J707438P7	CAP CER CL2 2N2 10%	1
C108	J707438P7	CAP CER CL2 2N2 10%	1
C109	J707809P25	CAP CER NPO 100P 5%	1
C110	J707809P23	CAP CER NPO 68P 5% G1/G2/G3	1
C110	J707809P17	CAP CER NPO 22P 5% G4/G5/G6	1
C111	J707438P7	CAP CER CL2 2N2 10%	1
C112	J707438P14	CAP CER CL2 10N 10%	1
C113	J707438P7	CAP CER CL2 2N2 10%	1
C114	J707438P7	CAP CER CL2 2N2 10%	1
C115	J707809P27	CAP CER NPO 150P 5% G1/G2/G3	1
C115	J707809P23	CAP CER NPO 68P 5% G4/G5/G6	1
C116	J707809P27	CAP CER NPO 150P 5% G1/G2/G3	1
C116	J707809P24	CAP CER NPO 82P 5% G4/G5/G6	1
C117	J707809P27	CAP CER NPO 150P 5% G4/G5/G6	1
C118	J707809P27	CAP CER NPO 150P 5% G4/G5/G6	1
C119	J707809P27	CAP CER NPO 150P 5% G4/G5/G6	1
C120	J707353P6	CAP ELECT 4U7 25V	1
C121	J707438P14	CAP CER CL2 10N 10%	1
C122	J707438P7	CAP CER CL2 2N2 10%	1
C123	J707438P14	CAP CER CL2 10N 10%	1
C124	J707438P7	CAP CER CL2 2N2 10%	1
C125	A700006P40	CAP MICA 170P 5% G1/G2/G3	1
C125	A700006P38	CAP MICA 150P 5% G4/G5/G6	1
C126	J709524P59	CAP CER RF 270P 5% G1/G2/G3	1
C126	J709524P49	CAP CER RF 100P 5% G4/G5/G6	1
C127	J709524P51	CAP CER RF 120P 5% G1/G2/G3	1
C127	J709524P45	CAP CER RF 68P 5% G4/G5/G6	1
C128	A700006P35	CAP MICA 110P 5% G1/G2/G3	1
C128	A700006P26	CAP MICA 47P 5% G4/G5/G6	1
C130	J707809P14	CAP CER NPO 12P 5%	1
C131	J707809P13	CAP CER NPO 10P .25P	1
C132	J707809P12	CAP CER NPO 8P2 .25P	1
C133	J707809P13	CAP CER NPO 10P .25P	1
C134	J707353P6	CAP ELECT 4U7 25V	1
C136	J707438P20	CAP CER CL2 33N 10%	1
C137	J707438P7	CAP CER CL2 2N2 10%	1
C138	J707438P7	CAP CER CL2 2N2 10%	1
C139	J707438P7	CAP CER CL2 2N2 10%	1
C140	J707438P7	CAP CER CL2 2N2 10%	1
C141	J707438P7	CAP CER CL2 2N2 10%	1
C142	A700006P14	CAP MICA 18P 5%	1
C143	A700006P26	CAP MICA 47P 5%	1
C144	A700006P26	CAP MICA 47P 5%	1
C145	A700006P18	CAP MICA 24P 5%	1
C146	J707438P7	CAP CER CL2 2N2 10%	1
C147	J707438P7	CAP CER CL2 2N2 10%	1
C148	J707438P7	CAP CER CL2 2N2 10%	1
C149	J707438P7	CAP CER CL2 2N2 10%	1
C150	J707809P10	CAP CER NPO 5P6 .25P G1/G2/G3	1
C150	J707809P12	CAP CER NPO 5P6 .25P G4/G5/G6	1
C151	J707809P10	CAP CER NPO 5P6 .25P G1/G2/G3	1
C151	J707809P12	CAP CER NPO 5P6 .25P G4/G5/G6	1
C152	J707438P7	CAP CER CL2 2N2 10%	1
C153	J707438P7	CAP CER CL2 2N2 10%	1
C154	J707438P7	CAP CER CL2 2N2 10%	1
C155	J707438P7	CAP CER CL2 2N2 10%	1
C156	J707353P3	CAP ELECT 0U47 50V	1
C157	J707438P7	CAP CER CL2 2N2 10%	1
C158	J707438P7	CAP CER CL2 2N2 10%	1
C159	J707438P14	CAP CER CL2 10N 10%	1
C160	J707436P77	CAP CER NPO 470P 5%	1
C161	J707438P7	CAP CER CL2 2N2 10%	1
C162	J707438P14	CAP CER CL2 10N 10%	1
C163	J707438P20	CAP CER CL2 33N 10%	1
C164	J707438P7	CAP CER CL2 2N2 10%	1
C165	J707809P16	CAP CER NPO 18P 5% G1/G2/G3	1
C165	J707809P17	CAP CER NPO 22P 5% G4/G5/G6	1
C166	J707438P5	CAP CER CL2 1N 10%	1
C167	J707412P13	CAP PYES 470N 10%	1
C168	J707438P7	CAP CER CL2 2N2 10%	1
C169	J707809P1	CAP CER NPO 1P0 .25P	1
C170	J707438P14	CAP CER CL2 10N 10%	1
C171	J707438P14	CAP CER CL2 10N 10%	1
C172	J707438P14	CAP CER CL2 10N 10%	1
C201	J707438P26	CAP CER CL2 100N 10%	1
C202	J707444P8	CAP TA SOL 22U 16V	1
C203	J706005P12	CAP ELECT 47U 40V	1
C204	J707438P7	CAP CER CL2 2N2 10%	1
C205	J707412P9	CAP PYES 100N 10%	1
C206	J707444P4	CAP TA SOL 1U 35V	1
C301	J707436P69	CAP CER NPO 220P 5%	1
C302	J707438P5	CAP CER CL2 1N 10%	1
C304	J707436P10	CAP CER NPO 5P6 .25P	1
C305	J707436P33	CAP CER NPO 27P 5%	1
C306	J707483P4	CAP PHEN 0P56 5%	1
C307	J707438P5	CAP CER CL2 1N 10%	1
C309	J707436P33	CAP CER NPO 27P 5%	1
C310	J707438P5	CAP CER CL2 1N 10%	1
C311	J707436P10	CAP CER NPO 5P6 .25P	1
C312	J707436P87	CAP CER NPO 1N2 5%	1
C315	J707436P10	CAP CER NPO 5P6 .25P	1
C317	J707444P2	CAP TA SOL 0U22 35V	1
C318	J707438P5	CAP CER CL2 1N 10%	1
C319	J707436P33	CAP CER NPO 27P 5%	1
C320	J707438P5	CAP CER CL2 1N 10%	1
C322	J707483P7	CAP PHEN 1P00 5%	1
C323	J707483P6	CAP PHEN 0P82 5%	1
C324	J707436P7	CAP CER NPO 3P3 .25P	1
C325	J707438P5	CAP CER CL2 1N 10%	1
C326	J707436P33	CAP CER NPO 27P 5%	1
C328	J707436P33	CAP CER NPO 27P 5%	1
C331	J707483P6	CAP PHEN 0P82 5%	1
C332	J707436P33	CAP CER NPO 27P 5%	1
C333	J707436P7	CAP CER NPO 3P3 .25P	1
C334	J707436P8	CAP CER NPO 3P9 .25P	1
C335	J707438P5	CAP CER CL2 1N 10%	1
C338	J707436P37	CAP CER NPO 33P 5%	1
C339	J707438P5	CAP CER CL2 1N 10%	1
C340	J707438P8	CAP CER CL2 3N3 10%	1
C345	J707438P5	CAP CER CL2 1N 10%	1
C347	J707438P5	CAP CER CL2 1N 10%	1
C348	J707438P5	CAP CER CL2 1N 10%	1
C350	J707436P10	CAP CER NPO 5P6 .25P	1
C351	J707436P25	CAP CER NPO 18P 5%	1
C353	J707483P8	CAP PHEN 1P20 5%	1
C354	J707436P25	CAP CER NPO 18P 5%	1
C355	J707436P9	CAP CER NPO 4P7 .25P	1
C356	J707438P5	CAP CER CL2 1N 10%	1
C357	J707436P1	CAP CER NPO 1P0 .25P	1
C358	J707436P1	CAP CER NPO 1P0 .25P	1
C359	J707438P5	CAP CER CL2 1N 10%	1
C401	J707438P8	CAP CER CL2 3N3 10%	1
C402	J707438P8	CAP CER CL2 3N3 10%	1
C403	J707438P8	CAP CER CL2 3N3 10%	1
C404	J707436P37	CAP CER NPO 33P 5%	1
C405	J707438P26	CAP CER CL2 100N 10%	1
C406	J707436P10	CAP CER NPO 5P6 .25P	1
C407	J707436P33	CAP CER NPO 27P 5%	1
C408	J707438P5	CAP CER CL2 1N 10%	1
C409	J707438P8	CAP CER CL2 3N3 10%	1
C410	J707444P8	CAP TA SOL 22U 16V	1
C411	J707438P26	CAP CER CL2 100N 10%	1
C412	J707438P26	CAP CER CL2 100N 10%	1
C413	J707436P37	CAP CER NPO 33P 5%	1
C414	J707438P8	CAP CER CL2 3N3 10%	1
C415	J707436P69	CAP CER NPO 220P 5%	1
C416	J707436P61	CAP CER NPO 100P 5%	1
C417	J707436P33	CAP CER NPO 27P 5%	1
C418	J707438P14	CAP CER CL2 10N 10%	1
C419	J707438P26	CAP CER CL2 100N 10%	1
C420	J707438P14	CAP CER CL2 10N 10%	1
C421	J707438P26	CAP CER CL2 100N 10%	1
C422	J707438P26	CAP CER CL2 100N 10%	1
C423	J707436P13	CAP CER NPO 10P 5%	1
C424	J707438P8	CAP CER CL2 3N3 10%	1
C425	J707412P13	CAP PYES 470N 10%	1
C426	J707436P93	CAP CER NPO 2N2 5%	1
C427	J707436P73	CAP CER NPO 330P 5%	
C428	J707436P71	CAP CER NPO 270P 5%	
C428	J707436P69	CAP CER NPO 220P 5%	

DATE: 11/ 7/1988

Pos	Code No	Description	Qt
C429	J707438P14	CAP CER CL2 10N 10%	1
C430	J707444P8	CAP TA SOL 22U 16V	1
C431	J707444P8	CAP TA SOL 22U 16V	1
C432	J707438P26	CAP CER CL2 100N 10%	1
C433	J707438P26	CAP CER CL2 100N 10%	1
C434	J707438P8	CAP CER CL2 3N3 10%	1
C435	J707436P1	CAP CER NPO 1P0 .25P	1
C436	J707438P26	CAP CER CL2 100N 10%	1
C437	J707436P45	CAP CER NPO 47P 5%	1
C438	J707438P14	CAP CER CL2 10N 10%	1
C439 ■		(G1/2/4/5) DELETED	
C501	J707412P11	CAP PYES 220N 10%	1
C502	J707412P11	CAP PYES 220N 10%	1
C504	A700235P16	CAP CER N150 18P 5%	1
C505	A700235P11	CAP CER N150 6P8 .25P	1
C506	A700235P20	CAP CER N150 39P 5%	1
C507	A700235P19	CAP CER N150 33P 5%	1
C508	A700235P25	CAP CER N150 100P 5%	1
C509	J707436P9	CAP CER NPO 4P7 .25P	1
C512	J707436P8	CAP CER NPO 3P9 .25P	1
C513	J707438P2	CAP CER CL2 330P 10%	1
C514	J707438P6	CAP CER CL2 1N5 10%	1
C517	J707444P6	CAP TA SOL 4U7 35V	1
C518	J707436P2	CAP CER NPO 1P2 .25P	1
C519	J707438P6	CAP CER CL2 1N5 10%	1
C520	J707436P69	CAP CER NPO 220P 5%	1
C521	J707436P29	CAP CER NPO 22P 5%	1
C522	J707438P6	CAP CER CL2 1N5 10%	1
C523	J707436P5	CAP CER NPO 2P2 .25P	1
C524	J707438P3	CAP CER CL2 470P 10%	1
C525	J707438P3	CAP CER CL2 470P 10%	1
C527	J707438P3	CAP CER CL2 470P 10%	1
C528	J707438P26	CAP CER CL2 100N 10%	1
C540	J707438P3	CAP CER CL2 470P 10%	1
C541	J707438P3	CAP CER CL2 470P 10%	1
C543	J707438P3	CAP CER CL2 470P 10%	1
C544	J707438P3	CAP CER CL2 470P 10%	1
C545	J707436P61	CAP CER NPO 100P 5%	1
C601	J707412P11	CAP PYES 220N 10%	1
C602	J707412P11	CAP PYES 220N 10%	1
C603	J707438P26	CAP CER CL2 100N 10%	1
C604	A700235P13	CAP CER N150 10P 5%	1
C605	A700235P10	CAP CER N150 5P6 .25P	1
C606	A700235P38	CAP CER N150 16P 5%	1
C607	A700235P11	CAP CER N150 6P8 .25P	1
C608	A700233P9	CAP CER CL2 2N2 20%	1
C610	J707436P61	CAP CER NPO 100P 5%	1
C611	J707436P6	CAP CER NPO 2P7 .25P	1
C612	J707438P6	CAP CER CL2 1N5 10%	1
C613	J707444P6	CAP TA SOL 4U7 35V	1
C614	J707438P6	CAP CER CL2 1N5 10%	1
C615	J707438P10	CAP CER CL2 4N7 10%	1
C616	J707438P4	CAP CER CL2 680P 10%	1
C617	J707436P49	CAP CER NPO 56P 5%	1
C618	J707436P1	CAP CER NPO 1P0 .25P	1
C619	J707438P6	CAP CER CL2 1N5 10%	1
C620	J707436P61	CAP CER NPO 100P 5%	1
C621	J707436P21	CAP CER NPO 15P 5%	1
C622	J707436P3	CAP CER NPO 1P5 .25P	1
C623	J707438P26	CAP CER CL2 100N 10%	1
C624	J707436P61	CAP CER NPO 100P 5%	1
C625	J707438P6	CAP CER CL2 1N5 10%	1
C626	J707438P5	CAP CER CL2 1N 10%	1
C627	J707438P26	CAP CER CL2 100N 10%	1
C628	J707436P7	CAP CER NPO 3P3 .25P	1
C629	J707436P65	CAP CER NPO 150P 5%	1
C630	J707438P26	CAP CER CL2 100N 10%	1
C631	J707438P6	CAP CER CL2 1N5 10%	1
C632	J707444P6	CAP TA SOL 4U7 35V	1
C633	J707444P17	CAP TA SOL 47U 10V	1
C634	J707438P26	CAP CER CL2 100N 10%	1
C635	J707438P1	CAP CER CL2 220P 10%	1
C636	J707444P17	CAP TA SOL 47U 10V	1
C637	J707438P26	CAP CER CL2 100N 10%	1
C638	J707438P5	CAP CER CL2 1N 10%	1
C639	J707438P8	CAP CER CL2 3N3 10%	1
C640	J707412P8	CAP PYES 68N 10%	1
C641	J707412P13	CAP PYES 470N 10%	1
C642	J707412P13	CAP PYES 470N 10%	1
C643	J707438P26	CAP CER CL2 100N 10%	1
C644	J707436P6	CAP CER NPO 2P7 .25P	1
C646	J707436P63	CAP CER NPO 120P 5%	1
C647	J707436P13	CAP CER NPO 10P 5%	1

Pos	Code No	Description	Qt
C652	J707438P22	CAP CER CL2 47N 10%	1
C653	J707444P6	CAP TA SOL 4U7 35V	1
C656	J707438P3	CAP CER CL2 470P 10%	1
C657	J707438P3	CAP CER CL2 470P 10%	1
C659	J707438P5	CAP CER CL2 1N 10%	1
C660	J707438P14	CAP CER CL2 10N 10%	1
C666	J707438P3	CAP CER CL2 470P 10%	1
C667	J707438P3	CAP CER CL2 470P 10%	1
C701	J707436P29	CAP CER NPO 22P 5%	1
C702	J708702P22	CAP CER N750 56P 5%	1
C703	J707436P69	CAP CER NPO 220P 5%	1
C705	J707438P5	CAP CER CL2 1N 10%	1
C706	J707438P14	CAP CER CL2 10N 10%	1
C707	J707436P10	CAP CER NPO 5P6 .25P	1
C708	J707438P14	CAP CER CL2 10N 10%	1
C709	J707438P14	CAP CER CL2 10N 10%	1
D100	A700047P3	DIO SI SIG 1N6263	1
D101	J706892P1	DIO SI PIN UM 9401	1
D102	J706892P1	DIO SI PIN UM 9401	1
D103	J707390P1	DIO SI SIG BAV 74	1
D300	J707928P2	DIO SI CAP BB 809	1
D301	J707928P2	DIO SI CAP BB 809	1
D302	J707928P2	DIO SI CAP BB 809	1
D303	J707928P2	DIO SI CAP BB 809	1
D304	J707928P2	DIO SI CAP BB 809	1
D305	J707928P2	DIO SI CAP BB 809	1
D306	J707928P2	DIO SI CAP BB 809	1
D307	J707928P2	DIO SI CAP BB 809	1
D401	A700025P8	DIO SI ZENR 6V8 5% 0.4W	1
D501	J707928P2	DIO SI CAP BB 809	1
D502	J707928P2	DIO SI CAP BB 809	1
D503	J707928P2	DIO SI CAP BB 809	1
D504	J707928P2	DIO SI CAP BB 809	1
D505	J707928P2	DIO SI CAP BB 809	1
D506	J707769P1	DIO SI CAP BBY 31	1
D601	J707928P2	DIO SI CAP BB 809	1
D602	J707928P2	DIO SI CAP BB 809	1
D603	J709536P1	DIO SI CAP MV 2111	1
D604	J709536P1	DIO SI CAP MV 2111	1
D605	J707389P1	DIO SI SIG BAV 99	1
D606	J708681P1	DIO SI SIG BAW 56	1
D607	J707390P1	DIO SI SIG BAV 74	1
D608	J707390P1	DIO SI SIG BAV 74	1
D610	J708681P1	DIO SI SIG BAW 56	1
D701	A700073P1	DIO SI CAP BB 409	1
D702	J707390P1	DIO SI SIG BAV 74	1
L100	K805653G9	COIL ASM 9 1/2T	1
L101	A700024P7	COIL RF FIX 0.33UH 10%	1
L102	A700024P3	COIL RF FIX 0.15UH 10%	1
L103	A700024P12	COIL RF FIX 0.82UH 10%	1
L104	K805653G2	COIL ASM 2 1/2T	1
L105	K805653G5	COIL ASM 5 1/2T G1/G2/G3	1
L105	K805653G8	COIL ASM 8 1/2T G4/G5/G6	1
L106	J707339G1	COIL FIX ASM	1
L107	K805653G4	COIL ASM 4 1/2T	1
L108	A700024P3	COIL RF FIX 0.15UH 10%	1
L109	J707256P2	COIL FIX	1
L110	J709287P1	CORE TOR FERR	1
L111	J707256P1	COIL FIX G1/G2/G3	1
L111	J707256G1	COIL ASM 1 1/2T G4/G5/G6	1
L113	A700024P3	COIL RF FIX 0.15UH 10%	1
L114	J709287P1	CORE TOR FERR	1
L115	J707256P2	COIL FIX	1
L116	J709287P1	CORE TOR FERR	1
L117	J709603P2	COIL G1/G2/G3	1
L117	J709603P6	COIL ASM 1 1/2T G4/G5/G6	1
L118	J709603P1	COIL G1/G2/G3	1
L118	J709603P6	COIL FIX G4/G5/G6	1
L121	A700024P18	COIL RF FIX 2.7UH 10%	1
L122	A700024P25	COIL RF FIX 10UH 10%	1
L123	A700024P25	COIL RF FIX 10UH 10%	1
L124	K805653G7	COIL ASM 7 1/2 T	1
L125	K805653G7	COIL ASM 7 1/2 T	1
L126	K805653G8	COIL ASM 8 1/2T	1
L127	A700024P25	COIL RF FIX 10UH 10%	1
L128	A700024P25	COIL RF FIX 10UH 10%	1
L301	J709099P8	COIL RF VAR 7-1/2T	1
L302	J709099P15	COIL RF VAR 7-1/2T TAP	1
L303	J707486P11	COIL RF FIX 2.2UH 10%	1
L304	J709099P8	COIL RF VAR 7-1/2T	1
L305	J707486P2	COIL RF FIX 3.3UH 10%	1
L306	J709099P8	COIL RF VAR 7-1/2T	1
L308	J709099P8	COIL RF VAR 7-1/2T	1

DATE: 11/ 7/1988

Pos	Code No	Description	Qt
L310	J709099P9	COIL RF VAR 7-1/2T TAP	1
L312	J708428P1	COIL RF VAR 45 MHZ	1
L313	J709099P12	COIL RF VAR 5-1/2T TAP	1
L314	J709099P14	COIL RF VAR 5-1/2T TAP	1
L401	J707486P3	COIL RF FIX 6.8UH 10%	1
L403	K805570G6	COIL AS M	1
L405	J708428P1	COIL RF VAR 45 MHZ	1
L406	K805570G5	COIL ASM	1
L407	A700024P25	COIL RF FIX 10UH 10%	1
L408	J708428P1	COIL RF VAR 45 MHZ	1
L409	J707431P1	COIL RF VAR 455KHZ 25%	1
L410	J707431P1	COIL RF VAR 455KHZ 25%	1
L501	A700024P21	COIL RF FIX 4.7UH 10%	1
L502	A700024P21	COIL RF FIX 4.7UH 10%	1
L504	A700024P21	COIL RF FIX 4.7UH 10%	1
L505	L855671P2	COIL RADIO FREQUENCY	1
L506	A700024P21	COIL RF FIX 4.7UH 10%	1
L508	A700024P5	COIL RF FIX 0.22UH 10%	1
L601	A700024P21	COIL RF FIX 4.7UH 10%	1
L602	A700024P21	COIL RF FIX 4.7UH 10%	1
L604	A700024P21	COIL RF FIX 4.7UH 10%	1
L605	L855671P2	COIL RA DIO FREQUENCY	1
L606	A700024P21	COIL RF FIX 4.7UH 10%	1
L607	A700024P4	COIL RF FIX 0.18UH 10%	1
L701	K805570G7	COIL ASM	1
L702	A700024P43	COIL RF FIX 330UH 10%	1
L703	A700024P27	COIL RF FIX 15UH 10%	1
P102	J707064P112	CONN PWB FEM 12-CKT	1
P105	A701883P4	CONN PWB FEM RECP	1
Q100	J707388P1	TSTR NPN SI BFR 53	1
Q101	A701940P1	TSTR NPN SI RF-PWR 0.4W	1
Q102	J709517P1	TSTR NPN SI RF-PWR 3W	1
Q103	J709162P1	TSTR NPN SI RF-PWR 27W G1/G2/G3	1
Q103	J709163P1	TSTR NPN SI RF-PWR 10W G4/G5/G6	1
Q106	J707432P1	TSTR PNP SI BCX 18	1
Q107	J707386P1	TSTR NPN SI BCW 32	1
Q108	J708406P1	TSTR NPN SI BD 233	1
Q109	J707386P1	TSTR NPN SI BCW 32	1
Q201	J707435P1	TSTR PNP SI BC 369	1
Q202	J707386P1	TSTR NPN SI BCW 32	1
Q203	J707432P1	TSTR PNP SI BCX 18	1
Q204	J707386P1	TSTR NPN SI BCW 32	1
Q301	J706011P2	TSTR NPN SI BFR 91A	1
Q302	J707817P1	TSTR JFET SI J 309	1
Q401	J707817P1	TSTR JFET SI J 309	1
Q402	J707817P1	TSTR JFET SI J 309	1
Q403	J707419P1	TSTR JFET SI BF511	1
Q404	J708418P1	TSTR NPN SI BFS 20	1
Q405	J708418P1	TSTR NPN SI BFS 20	1
R121	J707385P333	RES MFLM 1/8W 33K 5%	1
Q407	J707386P1	TSTR NPN SI BCW 32	1
Q408	J707387P1	TSTR PNP SI BCW 30	1
Q501	J707817P1	TSTR JFET SI J 309	1
Q502	J708318P1	TSTR PNP SI BFT 92	1
Q601	J707817P1	TSTR JFET SI J 309	1
Q603	J708318P1	TSTR PNP SI BFT 92	1
Q604	J707433P1	TSTR MFET SI BF 989	1
Q605	J707386P1	TSTR NPN SI BCW 32	1
Q612	J707386P1	TSTR NPN SI BCW 32	1
Q613	J707386P1	TSTR NPN SI BCW 32	1
Q701	J707419P1	TSTR JFET SI BF511	1
Q702	J707387P1	TSTR PNP SI BCW 30	1
R000	J707385P332	RES MFLM 1/8W 3K3 5% G4/G5/G6	1
R100	J707385P101	RES MFLM 1/8W 100R 5%	1
R101	J707385P470	RES MFLM 1/8W 47R 5%	1
R102	J707385P471	RES MFLM 1/8W 470R 5%	1
R103	J707385P390	RES MFLM 1/8W 39R 5%	1
R104	J707385P331	RES MFLM 1/8W 330R 5%	1
R105	J707385P122	RES MFLM 1/8W 1K2 5%	1
R106	J707385P100	RES MFLM 1/8W 10R 5%	1
R107	J707385P100	RES MFLM 1/8W 10R 5%	1
R108	J707385P560	RES MFLM 1/8W 56R 5%	1
R109	J707385P100	RES MFLM 1/8W 10R 5%	1
R110	J707385P100	RES MFLM 1/8W 10R 5 G1/G2/G3	1
R110	J707385P910	RES MFLM 1/8W 1R0 20 G4/G5/G6	1
R111	J707385P220	RES MFLM 1/8W 22R 5%	1
R112	J707385P947	RES MFLM 1/8W 4R7 20%	1
R113	J707385P100	RES MFLM 1/8W 10R 5%	1
R114	J707385P910	RES MFLM 1/8W 1R0 20% G1/G2/G3	1
R114	J707385P918	RES MFLM 1/8W 1R8 20% G4/G5/G6	1
R115	J707385P910	RES MFLM 1/8W 1R0 20% G1/G2/G3	1
R115	J707385P918	RES MFLM 1/8W 1R8 20% G4/G5/G6	1
R116	J707385P121	RES MFLM 1/8W 120R 5%	1

Pos	Code No	Description	Qt
R117	J707385P220	RES MFLM 1/8W 22R 5%	1
R118	J707385P473	RES MFLM 1/8W 47K 5%	1
R119	J707385P820	RES MFLM 1/8W 82R 5%	1
R120	J707385P820	RES MFLM 1/8W 82R 5%	1
R121	J707385P333	RES MFILM 1/8W 33K 5%	1
R122	J707385P221	RES MFLM 1/8W 220R 5%	1
R123	J707385P221	RES MFLM 1/8W 220R 5%	1
R124	J707385P101	RES MFLM 1/8W 100R 5% G1/G2/G3	1
R124	J707385P221	RES MFLM 1/8W 220R 5% G4/G5/G6	1
R125	J707385P330	RES MFLM 1/8W 33R 5%	1
R126	J707385P330	RES MFLM 1/8W 33R 5%	1
R127	J707385P330	RES MFLM 1/8W 33R 5%	1
R128	J707385P100	RES MFLM 1/8W 10R 5%	1
R129	J707385P121	RES MFLM 1/8W 120R 5% G1/G2/G3	1
R129	J707385P560	RES MFLM 1/8W 56R 5% G4/G5/G6	1
R130	J707385P121	RES MFLM 1/8W 120R 5% G1/G2/G3	1
R130	J707385P560	RES MFLM 1/8W 56R 5% G4/G5/G6	1
R131	J707385P392	RES MFLM 1/8W 3K9 5%	1
R132	J708538P9	RES VAR CERM 200K 20%	1
R133	J708538P4	RES VAR CERM 5K0 20%	1
R134	J707385P100	RES MFLM 1/8W 10R 5%	1
R135	J706147P2	RES THERM PTC 80R 25%	1
R136	J707385P682	RES MFLM 1/8W 6K8 5%	1
R137	J707385P223	RES MFLM 1/8W 22K 5%	1
R138	J707385P472	RES MFLM 1/8W 4K7 5%	1
R139	J707385P472	RES MFLM 1/8W 4K7 5%	1
R140	J707385P333	RES MFLM 1/8W 33K 5%	1
R141	J707385P333	RES MFLM 1/8W 33K 5%	1
R142	J707385P104	RES MFLM 1/8W 100K 5%	1
R143	J707385P222	RES MFLM 1/8W 2K2 5%	1
R144	J707385P222	RES MFLM 1/8W 2K2 5%	1
R145	J707385P223	RES MFLM 1/8W 22K 5%	1
R146	J707385P104	RES MFLM 1/8W 100K 5%	1
R147	J707385P104	RES MFLM 1/8W 100K 5%	1
R148	J707385P123	RES MFLM 1/8W 12K 5%	1
R149	J707385P472	RES MFLM 1/8W 4K7 5%	1
R150	J707385P102	RES MFLM 1/8W 1K0 5%	1
R151	J707385P683	RES MFLM 1/8W 68K 5%	1
R152	J707385P104	RES MFLM 1/8W 100K 5%	1
R153	J707385P472	RES MFLM 1/8W 4K7 5%	1
R154	J707385P274	RES MFLM 1/8W 270K 5%	1
R155	J707385P682	RES MFLM 1/8W 6K8 5%	1
R156	J707385P102	RES MFLM 1/8W 1K0 5%	1
R157	J707385P100	RES MFLM 1/8W 10R 5%	1
R158	J707385P102	RES MFLM 1/8W 1K0 5%	1
R159	J707385P472	RES MFLM 1/8W 4K7 5%	1
R160	J707385P104	RES MFLM 1/8W 100K 5%	1
R161	J709725P1	RES THERM PTC 1K0	1
R162	J707385P220	RES MFLM 1/8W 22R 5%	1
R201	J707385P561	RES MFLM 1/8W 560R 5%	1
R202	J707385P271	RES MFLM 1/8W 270R 5%	1
R203	J707385P153	RES MFLM 1/8W 15K 5%	1
R204	J707385P153	RES MFLM 1/8W 15K 5%	1
R205	J707385P472	RES MFLM 1/8W 4K7 5%	1
R206	J707385P272	RES MFLM 1/8W 2K7 5%	1
R207	J707385P563	RES MFLM 1/8W 56K 5%	1
R208	J707385P563	RES MFLM 1/8W 56K 5%	1
R209	J707385P271	RES MFLM 1/8W 270R 5%	1
R210	J707385P331	RES MFLM 1/8W 330R 5%	1
R301	J707385P331	RES MFLM 1/8W 330R 5%	1
R302	J707385P392	RES MFLM 1/8W 3K9 5%	1
R303	J707385P104	RES MFLM 1/8W 100K 5%	1
R304	J707385P104	RES MFLM 1/8W 100K 5%	1
R306	J707385P272	RES MFLM 1/8W 2K7 5%	1
R307	J707385P681	RES MFLM 1/8W 680R 5%	1
R308	J707385P470	RES MFLM 1/8W 47R 5%	1
R309	J707385P270	RES MFLM 1/8W 27R 5%	1
R310	J707385P104	RES MFLM 1/8W 100K 5%	1
R311	J707385P101	RES MFLM 1/8W 100R 5%	1
R312	J707385P104	RES MFLM 1/8W 100K 5%	1
R313	J707385P123	RES MFLM 1/8W 12K 5%	1
R314	J707385P104	RES MFLM 1/8W 100K 5%	1
R315	J707385P822	RES MFLM 1/8W 8K2 5%	1
R316	J707385P104	RES MFLM 1/8W 100K 5%	1
R317	J707385P471	RES MFLM 1/8W 470R 5%	1
R318	J707385P100	RES MFLM 1/8W 10R 5%	1
R319	J707385P101	RES MFLM 1/8W 100R 5%	1
R320	J707385P222	RES MFLM 1/8W 2K2 5%	1
R321	J707385P270	RES MFLM 1/8W 27R 5%	1
R322	J707385P471	RES MFLM 1/8W 470R 5%	1
R323	J707385P104	RES MFLM 1/8W 100K 5%	1
R324	J707385P104	RES MFLM 1/8W 100K 5%	1
R325	J707385P100	RES MFLM 1/8W 10R 5%	1

DATE: 11/ 7/1988

Pos	Code No	Description	Qt
R327	J707385P123	RES MFLM 1/8W 12K 5%	1
R328	J707385P332	RES MFLM 1/8W 3K3 5%	1
R329	J707385P102	RES MFLM 1/8W 1K0 5%	1
R401	J707385P390	RES MFLM 1/8W 39R 5%	1
R402	J707385P100	RES MFLM 1/8W 10R 5%	1
R403	J707385P222	RES MFLM 1/8W 2K2 5%	1
R404	J707385P472	RES MFLM 1/8W 4K7 5%	1
R405	J707385P100	RES MFLM 1/8W 10R 5%	1
R406	J707385P820	RES MFLM 1/8W 82R 5%	1
R407	J707385P470	RES MFLM 1/8W 47R 5%	1
R408	J707385P470	RES MFLM 1/8W 47R 5%	1
R409	J707385P332	RES MFLM 1/8W 3K3 5%	1
R410	J707385P471	RES MFLM 1/8W 470R 5%	1
R411	J707385P123	RES MFLM 1/8W 12K 5%	1
R412	J707385P472	RES MFLM 1/8W 4K7 5%	1
R413	J707385P821	RES MFLM 1/8W 820R 5%	1
R414	J707385P332	RES MFLM 1/8W 3K3 5%	1
R415	J707385P222	RES MFLM 1/8W 2K2 5%	1
R416	J707385P562	RES MFLM 1/8W 5K6 5%	1
R417	J707385P103	RES MFLM 1/8W 10K 5%	1
R418	J707385P153	RES MFLM 1/8W 15K 5%	1
R419	J707385P182	RES MFLM 1/8W 1K8 5%	1
R420	J707385P182	RES MFLM 1/8W 1K8 5%	1
R421	J707385P182	RES MFLM 1/8W 1K8 5%	1
R422	J707385P473	RES MFLM 1/8W 47K 5%	1
R423	J707385P153	RES MFLM 1/8W 15K 5%	1
R424	J708538P5	RES VAR CERM 10K 20%	1
R425	J707385P272	RES MFLM 1/8W 2K7 5%	1
R426	J707385P333	RES MFLM 1/8W 33K 5% G1/G4	1
R426	J707385P473	RES MFLM 1/8W 47K 5% G2/G3/G5/G6	1
R427	J707385P473	RES MFLM 1/8W 47K 5% G1/G3/G4/G6	1
R427	J707385P393	RES MFLM 1/8W 39K 5% G2/G5	1
R428	J707385P393	RES MFLM 1/8W 39K 5% G1/G4	1
R428	J707385P563	RES MFLM 1/8W 56K 5% G2/G3/G5/G6	1
R429	J707385P104	RES MFLM 1/8W 100K 5%	1
R430	J709329P447	RES MFLM 1/8W 301K 5% G1/G2/G4/G5	1
R430	J707385P334	RES MFLM 1/8W 330K 5% G3/G6	1
R431	J707385P473	RES MFLM 1/8W 47K 5%	1
R432	J707385P473	RES MFLM 1/8W 47K 5%	1
R433	J707385P271	RES MFLM 1/8W 270R 5%	1
R434	J707385P102	RES MFLM 1/8W 1K0 5%	1
R435	J706147P3	RES THERM PTC 250R 25%	1
R436	J707385P392	RES MFLM 1/8W 3K9 5%	1
R437	J707406P7	RES THERM NTC 220R 10%	1
R438	J707385P222	RES MFLM 1/8W 2K2 5%	1
R439	J707385P392	RES MFLM 1/8W 3K9 5%	1
R440	J707385P392	RES MFLM 1/8W 3K9 5%	1
R441	J707385P101	RES MFLM 1/8W 100R 5%	1
R442	J708538P6	RES VAR CERM 20K 20%	1
R444	J707385P473	RES MFLM 1/8W 47K 5%	1
R445	J707385P273	RES MFLM 1/8W 27K 5%	1
R446	J707385P224	RES MFLM 1/8W 220K 5%	1
R447	J707385P392	RES MFLM 1/8W 3K9 5%	1
R448	J707385P101	RES MFLM 1/8W 100R 5%	1
R449	J707385P470	RES MFLM 1/8W 47R 5%	1
R450	J707385P103	RES MFLM 1/8W 10K 5%	1
R452	J707385P332	RES MFLM 1/8W 3K3 5%	1
R501	J707385P821	RES MFLM 1/8W 820R 5%	1
R502	J707385P821	RES MFLM 1/8W 820R 5%	1
R504	J707385P104	RES MFLM 1/8W 100K 5%	1
R505	J707385P104	RES MFLM 1/8W 100K 5%	1
R508	J707385P103	RES MFLM 1/8W 10K 5%	1
R509	J707385P151	RES MFLM 1/8W 150R 5%	1
R510	J707385P103	RES MFLM 1/8W 10K 5%	1
R512	J707385P561	RES MFLM 1/8W 560R 5%	1
R513	J707385P272	RES MFLM 1/8W 2K7 5%	1
R514	J707385P682	RES MFLM 1/8W 6K8 5%	1
R515	J707385P221	RES MFLM 1/8W 220R 5%	1
R516	J707385P221	RES MFLM 1/8W 220R 5%	1
R517	J707385P101	RES MFLM 1/8W 100R 5%	1
R518	J707385P100	RES MFLM 1/8W 10R 5%	1
R529	J707385P392	RES MFLM 1/8W 3K9 5%	1
R601	J706035P52	RES MFLM 1/8W 180k 5%	1
R602	J707385P122	RES MFLM 1/8W 1K2 5%	1
R603	J707385P122	RES MFLM 1/8W 1K2 5%	1
R605	J707385P104	RES MFLM 1/8W 100K 5%	1
R606	J707385P104	RES MFLM 1/8W 100K 5%	1
R607	J707385P561	RES MFLM 1/8W 560R 5%	1
R608	J707385P682	RES MFLM 1/8W 6K8 5%	1
R609	J707385P332	RES MFLM 1/8W 3K3 5%	1
R610	J707385P331	RES MFLM 1/8W 330R 5%	1
R611	J707385P151	RES MFLM 1/8W 150R 5%	1
R612	J707385P102	RES MFLM 1/8W 1K0 5%	1

Pos	Code No	Description	Qt
R613	J707385P101	RES MFLM 1/8W 100R 5%	1
R614	J707385P272	RES MFLM 1/8W 2K7 5%	1
R615	J707385P682	RES MFLM 1/8W 6K8 5%	1
R616	J707385P104	RES MFLM 1/8W 100K 5%	1
R617	J707385P102	RES MFLM 1/8W 1K0 5%	1
R618	J707385P331	RES MFLM 1/8W 330R 5%	1
R619	J707385P681	RES MFLM 1/8W 680R 5%	1
R620	J707385P224	RES MFLM 1/8W 220K 5%	1
R621	J707385P223	RES MFLM 1/8W 22K 5%	1
R622	J707385P101	RES MFLM 1/8W 100R 5%	1
R623	J707385P100	RES MFLM 1/8W 10R 5%	1
R624	J707385P103	RES MFLM 1/8W 10K 5%	1
R625	J707385P224	RES MFLM 1/8W 220K 5%	1
R626	J707385P124	RES MFLM 1/8W 120K 5%	1
R627	J707385P100	RES MFLM 1/8W 10R 5%	1
R628	J707385P684	RES MFLM 1/8W 680K 5%	1
R629	J707385P223	RES MFLM 1/8W 22K 5%	1
R630	J707385P824	RES MFLM 1/8W 820K 5%	1
R631	J707385P123	RES MFLM 1/8W 12K 5%	1
R632	J707385P102	RES MFLM 1/8W 1K0 5%	1
R633	J707385P332	RES MFLM 1/8W 3K3 5%	1
R634	J707385P181	RES MFLM 1/8W 180R 5%	1
R635	J707385P474	RES MFLM 1/8W 470K 5%	1
R636	J707385P333	RES MFLM 1/8W 33K 5%	1
R637	J707385P105	RES MFLM 1/8W 1M0 10%	1
R638	J707385P184	RES MFLM 1/8W 180K 5%	1
R639	J707385P184	RES MFLM 1/8W 180K 5%	1
R640	J707385P105	RES MFLM 1/8W 1M0 10%	1
R641	J707385P473	RES MFLM 1/8W 47K 5%	1
R642	J707385P153	RES MFLM 1/8W 15K 5%	1
R643	J707385P393	RES MFLM 1/8W 39K 5%	1
R644	J707385P333	RES MFLM 1/8W 33K 5%	1
R645	J707385P473	RES MFLM 1/8W 47K 5%	1
R646	J707385P562	RES MFLM 1/8W 5K6 5%	1
R647	J707385P473	RES MFLM 1/8W 47K 5%	1
R649	J707385P223	RES MFLM 1/8W 22K 5%	1
R650	J707385P823	RES MFLM 1/8W 82K 5%	1
R651	J707385P153	RES MFLM 1/8W 15K 5%	1
R652	J707385P183	RES MFLM 1/8W 18K 5%	1
R653	J707385P393	RES MFLM 1/8W 39K 5%	1
R654	J707385P823	RES MFLM 1/8W 82K 5%	1
R655	J707385P154	RES MFLM 1/8W 150K 5%	1
R656	J707385P223	RES MFLM 1/8W 22K 5%	1
R657	J707385P333	RES MFLM 1/8W 33K 5%	1
R658	J707385P473	RES MFLM 1/8W 47K 5%	1
R659	J707385P473	RES MFLM 1/8W 47K 5%	1
R660	J708538P6	RES VAR CERM 20K 20%	1
R661	J707385P473	RES MFLM 1/8W 47K 5%	1
R662	J707385P824	RES MFLM 1/8W 820K 5%	1
R663	J707385P124	RES MFLM 1/8W 120K 5%	1
R664	J707385P124	RES MFLM 1/8W 120K 5%	1
R665	J707385P122	RES MFLM 1/8W 1K2 5%	1
R666	J707385P221	RES MFLM 1/8W 220R 5%	1
R667	J707385P103	RES MFLM 1/8W 10K 5%	1
R668	J707385P562	RES MFLM 1/8W 5K6 5%	1
R669	J707385P822	RES MFLM 1/8W 8K2 5%	1
R670	J707385P822	RES MFLM 1/8W 8K2 5%	1
R671	J707385P101	RES MFLM 1/8W 100R 5%	1
R672	J708538P5	RES VAR CERM 10K 20%	1
R673	J707385P562	RES MFLM 1/8W 5K6 5%	1
R674	J708538P5	RES VAR CERM 10K 20%	1
R675	J707385P470	RES MFLM 1/8W 47R 5%	1
R676	J707385P821	RES MFLM 1/8W 820R 5%	1
R677	J708538P7	RES VAR CERM 50K 20%	1
R678	J707385P223	RES MFLM 1/8W 22K 5%	1
R679	J707385P152	RES MFLM 1/8W 1K5 5%	1
R680	J707385P223	RES MFLM 1/8W 22K 5%	1
R681	J707385P183	RES MFLM 1/8W 18K 5%	1
R682	J707385P183	RES MFLM 1/8W 18K 5%	1
R683	J707385P103	RES MFLM 1/8W 10K 5%	1
R684	J707385P103	RES MFLM 1/8W 10K 5%	1
R685	J707385P105	RES MFLM 1/8W 1M0 10%	1
R686	J707385P124	RES MFLM 1/8W 120K 5%	1
R687	J707385P273	RES MFLM 1/8W 27K 5%	1
R689	J707385P223	RES MFLM 1/8W 22K 5%	1
R690	J707385P105	RES MFLM 1/8W 1M0 10%	1
R691	J707385P223	RES MFLM 1/8W 22K 5%	1
R692	J707385P105	RES MFLM 1/8W 1M0 10%	1
R693	J707385P223	RES MFLM 1/8W 22K 5%	1
R694	J707385P105	RES MFLM 1/8W 1M0 10%	1
R695			
R696			
R697			

Pos	Code No	Description	Qt
R698	J707385P103	RES MFLM 1/8W 10K 5%	1
R699	J707385P392	RES MFLM 1/8W 3K9 5%	1
R702	A701250P413	RES MFILM 133K 1% 1/4W	1
R703	A701250P213	RES MFILM 1K33 1% 1/4W	1
R704	A701250P326	RES MFILM 18K2 1% 1/4W	1
R707	J707385P104	RES MFLM 1/8W 100K 5%	1
R708	J707385P105	RES MFLM 1/8W 1MO 10%	1
R709	J707385P181	RES MFLM 1/8W 180R 5%	1
R710	J707385P101	RES MFLM 1/8W 100R 5%	1
R711	J707385P223	RES MFLM 1/8W 22K 5%	1
R712	J707385P154	RES MFLM 1/8W 150K 5%	1
R713	J707385P821	RES MFLM 1/8W 820R 5%	1
R714	J707385P104	RES MFLM 1/8W 100K 5%	1
R715	J707385P563	RES MFLM 1/8W 56K 5%	1
U100	J708165P2	IC LIN OP-AMP 324	1
U201	J708333P1	IC LIN VR FIX 4785	1
U401	J707449P1	IC LIN IF-AMP 3357	1
U402	M905766G1	INT CKT SQ 4002 G1/G2/G5/G4	1
U402	M905766G2	INT CKT SQ 4003 G6/G3	1
U601	J707859P1	IC LIN OP-AMP 204	1
U602	J707859P1	IC LIN OP-AMP 204	1
U604	J707859P1	IC LIN OP-AMP 204	1
U606	J707243P1	IC DIG REG 4094	1
U607	J707374P1	IC PLL PRESC 8793	1
U608	B800902P1	IC PLL SYN CUSTOM DES	1
U609	J707859P1	IC LIN OP-AMP 204	1
U610	J708503P2	IC LIN CMPAR LM 339	1
U615	J708621P2	CPLR OPTO PC 827	1
U616	J708503P2	IC LIN CMPAR LM 339	1
W003	J707256P1	COIL FIX	1
W004	J707256P1	COIL FIX	1
W005	J708717P1	STRAP	1
W006	J708716P1	STRAP	1
Y401	J707309P1	CRYSTAL UNIT 20.9450MHZ	1
Y701	J707567P19	CRYSTAL UNIT 7.4000MHZ	1
Z401	J707310P1	FLTR CRY 21.4 +/-7.50KHZ G1/G4	1
Z401	J707310P2	FLTR CRY 21.4 +/-7.50KHZ G2/G5	1
Z401	J707310P3	FLTR CRY 21.4 +/-3.75KHZ G3/G6	1
Z402	J707446P1	FLTR CER 455K +/-10KHZ G1/G4	1
Z402	J707446P3	FLTR CER 455K +/-7.5KHZ G2/G5	1
Z402	J707446P4	FLTR CER 455K +/-4.5KHZ G3/G6	1
Z403	J707446P1	FLTR CER 455K +/-10KHZ G1/G4	1
Z403	J707446P3	FLTR CER 455K +/-7.5KHZ G2/G5	1
Z403	J707446P4	FLTR CER 455K +/-4.5KHZ G3/G6	1
	M905893P1R2	BD PW	1
		NON ELECTRONICAL PARTS	
	J708561P3	COIL FIX	1
	K805776P1	CASTING HEAT SINK	1
	K805569G2	SHIELD METALLIZED	1
	J706281P7	CORE SCREW FERR U 25	8
	J706804P2	WASH INS CRYS FOR HC-18/U	4

Pos	Code No	Description	Qt

DATE: 10/ 6/1988

Pos	Code No	Description	Qt
	M905892G1	RF6332S25 CHANNEL SPACING 25kHZ	
	M905892G2	RF6333S25 CHANNEL SPACING 20kHZ	
	M905892G3	RF6334S25 CHANNEL SPACING 12.5kHZ	
	M905892G4	RF6332S6 CHANNEL SPACING 25kHZ	
	M905892G5	RF6333S6 CHANNEL SPACING 20kHZ	
	M905892G6	RF6334S6 CHANNEL SPACING 12.5kHZ	
C100	J707809P13	CAP CER NPO 10P 5%	1
C101	J707438P4	CAP CER CL2 680P 10%	1
C102	J707438P7	CAP CER CL2 2N2 10%	1
C103	J707436P65	CAP CER NPO 150P 5%	1
C104	J707809P15	CAP CER NPO 15P 5%	1
C105	J707809P17	CAP CER NPO 22P 5%	1
C106	J707809P15	CAP CER NPO 15P 5%	1
C107	J707438P7	CAP CER CL2 2N2 10%	1
C108	J707438P7	CAP CER CL2 2N2 10%	1
C109	J707809P25	CAP CER NPO 100P 5%	1
C110	J707809P23	CAP CER NPO 68P 5% G1/G2/G3	1
C110	J707809P17	CAP CER NPO 22P 5% G4/G5/G6	1
C111	J707438P7	CAP CER CL2 2N2 10%	1
C112	J707438P14	CAP CER CL2 10N 10%	1
C113	J707438P7	CAP CER CL2 2N2 10%	1
C114	J707438P7	CAP CER CL2 2N2 10%	1
C115	J707809P27	CAP CER NPO 150P 5% G1/G2/G3	1
C115	J707809P23	CAP CER NPO 68P 5% G4/G5/G6	1
C116	J707809P27	CAP CER NPO 150P 5% G1/G2/G3	1
C116	J707809P24	CAP CER NPO 82P 5% G4/G5/G6	1
C117	J707809P27	CAP CER NPO 150P 5% G4/G5/G6	1
C118	J707809P27	CAP CER NPO 150P 5% G4/G5/G6	1
C119	J707809P27	CAP CER NPO 150P 5% G4/G5/G6	1
C120	J707353P6	CAP ELECT 4U7 25V	1
C121	J707438P14	CAP CER CL2 10N 10%	1
C122	J707438P7	CAP CER CL2 2N2 10%	1
C123	J707438P14	CAP CER CL2 10N 10%	1
C124	J707438P7	CAP CER CL2 2N2 10%	1
C125	A700006P40	CAP MICA 170P 5% G1/G2/G3	1
C125	A700006P38	CAP MICA 150P 5% G4/G5/G6	1
C126	J709524P59	CAP CER RF 270P 5% G1/G2/G3	1
C126	J709524P49	CAP CER RF 100P 5% G4/G5/G6	1
C127	J709524P51	CAP CER RF 120P 5% G1/G2/G3	1
C127	J709524P45	CAP CER RF 68P 5% G4/G5/G6	1
C128	A700006P35	CAP MICA 110P 5% G1/G2/G3	1
C128	A700006P26	CAP MICA 47P 5% G4/G5/G6	1
C130	J707809P14	CAP CER NPO 12P 5%	1
C131	J707809P13	CAP CER NPO 10P .25P	1
C132	J707809P12	CAP CER NPO 8P2 .25P	1
C133	J707809P13	CAP CER NPO 10P .25P	1
C134	J707353P6	CAP ELECT 4U7 25V	1
C136	J707438P20	CAP CER CL2 33N 10%	1
C137	J707438P7	CAP CER CL2 2N2 10%	1
C138	J707438P7	CAP CER CL2 2N2 10%	1
C139	J707438P7	CAP CER CL2 2N2 10%	1
C140	J707438P7	CAP CER CL2 2N2 10%	1
C141	J707438P7	CAP CER CL2 2N2 10%	1
C142	A700006P14	CAP MICA 18P 5%	1
C143	A700006P26	CAP MICA 47P 5%	1
C144	A700006P26	CAP MICA 47P 5%	1
C145	A700006P18	CAP MICA 24P 5%	1
C146	J707438P7	CAP CER CL2 2N2 10%	1
C147	J707438P7	CAP CER CL2 2N2 10%	1
C148	J707438P7	CAP CER CL2 2N2 10%	1
C149	J707438P7	CAP CER CL2 2N2 10%	1
C150	J707809P10	CAP CER NPO 5P6 .25P G1/G2/G3	1
C150	J707809P12	CAP CER NPO 5P6 .25P G4/G5/G6	1
C151	J707809P10	CAP CER NPO 5P6 .25P G1/G2/G3	1
C151	J707809P12	CAP CER NPO 5P6 .25P G4/G5/G6	1
C152	J707438P7	CAP CER CL2 2N2 10%	1
C153	J707438P7	CAP CER CL2 2N2 10%	1
C154	J707438P7	CAP CER CL2 2N2 10%	1
C155	J707438P7	CAP CER CL2 2N2 10%	1
C156	J707353P3	CAP ELECT 0U47 50V	1
C157	J707438P7	CAP CER CL2 2N2 10%	1
C158	J707438P7	CAP CER CL2 2N2 10%	1
C159	J707438P14	CAP CER CL2 10N 10%	1
C160	J707436P77	CAP CER NPO 470P 5%	1
C161	J707438P7	CAP CER CL2 2N2 10%	1
C162	J707438P14	CAP CER CL2 10N 10%	1
C163	J707438P20	CAP CER CL2 33N 10%	1
C164	J707438P7	CAP CER CL2 2N2 10%	1
C165	J707809P16	CAP CER NPO 18P 5% G1/G2/G3	1
C165	J707809P17	CAP CER NPO 22P 5% G4/G5/G6	1

Pos	Code No	Description	Qt
C166	J707438P5	CAP CER CL2 1N 10%	1
C167	J707412P13	CAP PYES 470N 10%	1
C168	J707438P7	CAP CER CL2 2N2 10%	1
C169	J707809P1	CAP CER NPO 1P0 .25P	1
C170	J707438P14	CAP CER CL2 10N 10%	1
C171	J707438P14	CAP CER CL2 10N 10%	1
C172	J707438P14	CAP CER CL2 10N 10%	1
C201	J707438P26	CAP CER CL2 100N 10%	1
C202	J707444P8	CAP TA SOL 22U 16V	1
C203	J706005P12	CAP ELECT 47U 40V	1
C204	J707438P7	CAP CER CL2 2N2 10%	1
C205	J707412P9	CAP PYES 100N 10%	1
C206	J707444P4	CAP TA SOL 1U 35V	1
C301	J707436P69	CAP CER NPO 220P 5%	1
C302	J707438P5	CAP CER CL2 1N 10%	1
C304	J707436P10	CAP CER NPO 5P6 .25P	1
C305	J707436P33	CAP CER NPO 27P 5%	1
C306	J707483P4	CAP PHEN 0P56 5%	1
C307	J707438P5	CAP CER CL2 1N 10%	1
C309	J707436P33	CAP CER NPO 27P 5%	1
C310	J707438P5	CAP CER CL2 1N 10%	1
C311	J707436P10	CAP CER NPO 5P6 .25P	1
C312	J707436P87	CAP CER NPO 1N2 5%	1
C315	J707436P10	CAP CER NPO 5P6 .25P	1
C317	J707444P2	CAP TA SOL 0U22 35V	1
C318	J707438P5	CAP CER CL2 1N 10%	1
C319	J707436P33	CAP CER NPO 27P 5%	1
C320	J707438P5	CAP CER CL2 1N 10%	1
C322	J707483P7	CAP PHEN 1P00 5%	1
C323	J707483P6	CAP PHEN 0P82 5%	1
C324	J707436P7	CAP CER NPO 3P3 .25P	1
C325	J707438P5	CAP CER CL2 1N 10%	1
C326	J707436P33	CAP CER NPO 27P 5%	1
C328	J707436P33	CAP CER NPO 27P 5%	1
C331	J707483P6	CAP PHEN 0P82 5%	1
C332	J707436P33	CAP CER NPO 27P 5%	1
C333	J707436P7	CAP CER NPO 3P3 .25P	1
C334	J707436P8	CAP CER NPO 3P9 .25P	1
C335	J707438P5	CAP CER CL2 1N 10%	1
C338	J707436P37	CAP CER NPO 33P 5%	1
C339	J707438P5	CAP CER CL2 1N 10%	1
C340	J707438P8	CAP CER CL2 3N3 10%	1
C345	J707438P5	CAP CER CL2 1N 10%	1
C347	J707438P5	CAP CER CL2 1N 10%	1
C348	J707438P5	CAP CER CL2 1N 10%	1
C350	J707436P10	CAP CER NPO 5P6 .25P	1
C351	J707436P25	CAP CER NPO 18P 5%	1
C353	J707483P8	CAP PHEN 1P20 5%	1
C354	J707436P25	CAP CER NPO 18P 5%	1
C355	J707436P9	CAP CER NPO 4P7 .25P	1
C356	J707438P5	CAP CER CL2 1N 10%	1
C357	J707436P1	CAP CER NPO 1P0 .25P	1
C358	J707436P1	CAP CER NPO 1P0 .25P	1
C359	J707438P5	CAP CER CL2 1N 10%	1
C401	J707438P8	CAP CER CL2 3N3 10%	1
C402	J707438P8	CAP CER CL2 3N3 10%	1
C403	J707438P8	CAP CER CL2 3N3 10%	1
C404	J707436P37	CAP CER NPO 33P 5%	1
C405	J707438P26	CAP CER CL2 100N 10%	1
C406	J707436P10	CAP CER NPO 5P6 .25P	1
C407	J707436P33	CAP CER NPO 27P 5%	1
C408	J707438P5	CAP CER CL2 1N 10%	1
C409	J707438P8	CAP CER CL2 3N3 10%	1
C410	J707444P8	CAP TA SOL 22U 16V	1
C411	J707438P26	CAP CER CL2 100N 10%	1
C412	J707438P26	CAP CER CL2 100N 10%	1
C413	J707436P37	CAP CER NPO 33P 5%	1
C414	J707438P8	CAP CER CL2 3N3 10%	1
C415	J707436P69	CAP CER NPO 220P 5%	1
C416	J707436P61	CAP CER NPO 100P 5%	1
C417	J707436P33	CAP CER NPO 27P 5%	1
C418	J707438P14	CAP CER CL2 10N 10%	1
C419	J707438P26	CAP CER CL2 100N 10%	1
C420	J707438P14	CAP CER CL2 10N 10%	1
C421	J707438P26	CAP CER CL2 100N 10%	1
C422	J707438P26	CAP CER CL2 100N 10%	1
C423	J707436P13	CAP CER NPO 10P 5%	1
C424	J707438P8	CAP CER CL2 3N3 10%	1
C425	J707412P13	CAP PYES 470N 10%	1
C426	J707436P93	CAP CER NPO 2N2 5%	1
C427	J707436P73	CAP CER NPO 330P 5%	
C428	J707436P71	CAP CER NPO 270P 5%	
C428	J707436P69	CAP CER NPO 220P 5%	

Pos	Code No	Description	Qt
C429	J707438P14	CAP CER CL2 10N 10%	1
C430	J707444P8	CAP TA SOL 22U 16V	1
C431	J707444P8	CAP TA SOL 22U 16V	1
C432	J707438P26	CAP CER CL2 100N 10%	1
C433	J707438P26	CAP CER CL2 100N 10%	1
C434	J707438P8	CAP CER CL2 3N3 10%	1
C435	J707436P1	CAP CER NPO 1P0 .25P	1
C436	J707438P26	CAP CER CL2 100N 10%	1
C437	J707436P45	CAP CER NPO 47P 5%	1
C438	J707438P14	CAP CER CL2 10N 10%	1
C439	J707444P1	CAP TA SOL 0U1 35VG1/G2/G4/G5	1
C501	J707412P11	CAP PYES 220N 10%	1
C502	J707412P11	CAP PYES 220N 10%	1
C504	A700235P16	CAP CER N150 18P 5%	1
C505	A700235P11	CAP CER N150 6P8 .25P	1
C506	A700235P20	CAP CER N150 39P 5%	1
C507	A700235P19	CAP CER N150 33P 5%	1
C508	A700235P25	CAP CER N150 100P 5%	1
C509	J707436P9	CAP CER NPO 4P7 .25P	1
C512	J707436P8	CAP CER NPO 3P9 .25P	1
C513	J707438P2	CAP CER CL2 330P 10%	1
C514	J707438P6	CAP CER CL2 1N5 10%	1
C517	J707444P6	CAP TA SOL 4U7 35V	1
C518	J707436P2	CAP CER NPO 1P2 .25P	1
C519	J707438P6	CAP CER CL2 1N5 10%	1
C520	J707436P69	CAP CER NPO 220P 5%	1
C521	J707436P29	CAP CER NPO 22P 5%	1
C522	J707438P6	CAP CER CL2 1N5 10%	1
C523	J707436P5	CAP CER NPO 2P2 .25P	1
C524	J707438P3	CAP CER CL2 470P 10%	1
C525	J707438P3	CAP CER CL2 470P 10%	1
C527	J707438P3	CAP CER CL2 470P 10%	1
C528	J707438P26	CAP CER CL2 100N 10%	1
C540	J707438P3	CAP CER CL2 470P 10%	1
C541	J707438P3	CAP CER CL2 470P 10%	1
C543	J707438P3	CAP CER CL2 470P 10%	1
C544	J707438P3	CAP CER CL2 470P 10%	1
C545	J707436P61	CAP CER NPO 100P 5%	1
C601	J707412P11	CAP PYES 220N 10%	1
C602	J707412P11	CAP PYES 220N 10%	1
C603	J707438P26	CAP CER CL2 100N 10%	1
C604	A700235P13	CAP CER N150 10P 5%	1
C605	A700235P10	CAP CER N150 5P6 .25P	1
C606	A700235P38	CAP CER N150 16P 5%	1
C607	A700235P11	CAP CER N150 6P8 .25P	1
C608	A700233P9	CAP CER CL2 2N2 20%	1
C610	J707436P61	CAP CER NPO 100P 5%	1
C611	J707436P6	CAP CER NPO 2P7 .25P	1
C612	J707438P6	CAP CER CL2 1N5 10%	1
C613	J707444P6	CAP TA SOL 4U7 35V	1
C614	J707438P6	CAP CER CL2 1N5 10%	1
C615	J707438P10	CAP CER CL2 4N7 10%	1
C616	J707438P4	CAP CER CL2 680P 10%	1
C617	J707436P49	CAP CER NPO 56P 5%	1
C618	J707436P1	CAP CER NPO 1P0 .25P	1
C619	J707438P6	CAP CER CL2 1N5 10%	1
C620	J707436P61	CAP CER NPO 100P 5%	1
C621	J707436P21	CAP CER NPO 15P 5%	1
C622	J707436P3	CAP CER NPO 1P5 .25P	1
C623	J707438P26	CAP CER CL2 100N 10%	1
C624	J707436P61	CAP CER NPO 100P 5%	1
C625	J707438P6	CAP CER CL2 1N5 10%	1
C626	J707438P5	CAP CER CL2 1N 10%	1
C627	J707438P26	CAP CER CL2 100N 10%	1
C628	J707436P7	CAP CER NPO 3P3 .25P	1
C629	J707436P65	CAP CER NPO 150P 5%	1
C630	J707438P26	CAP CER CL2 100N 10%	1
C631	J707438P6	CAP CER CL2 1N5 10%	1
C632	J707444P6	CAP TA SOL 4U7 35V	1
C633	J707444P17	CAP TA SOL 47U 10V	1
C634	J707438P26	CAP CER CL2 100N 10%	1
C635	J707438P1	CAP CER CL2 220P 10%	1
C636	J707444P17	CAP TA SOL 47U 10V	1
C637	J707438P26	CAP CER CL2 100N 10%	1
C638	J707438P5	CAP CER CL2 1N 10%	1
C639	J707438P8	CAP CER CL2 3N3 10%	1
C640	J707412P8	CAP PYES 68N 10%	1
C641	J707412P13	CAP PYES 470N 10%	1
C642	J707412P13	CAP PYES 470N 10%	1
C643	J707438P26	CAP CER CL2 100N 10%	1
C644	J707436P6	CAP CER NPO 2P7 .25P	1
C646	J707436P63	CAP CER NPO 120P 5%	1
C647	J707436P13	CAP CER NPO 10P 5%	1

Pos	Code No	Description	Qt
C652	J707438P22	CAP CER CL2 47N 10%	1
C653	J707444P6	CAP TA SOL 4U7 35V	1
C656	J707438P3	CAP CER CL2 470P 10%	1
C657	J707438P3	CAP CER CL2 470P 10%	1
C659	J707438P5	CAP CER CL2 1N 10%	1
C660	J707438P14	CAP CER CL2 10N 10%	1
C666	J707438P3	CAP CER CL2 470P 10%	1
C667	J707438P3	CAP CER CL2 470P 10%	1
C701	J707436P29	CAP CER NPO 22P 5%	1
C702	J708702P22	CAP CER N750 56P 5%	1
C703	J707436P69	CAP CER NPO 220P 5%	1
C705	J707438P5	CAP CER CL2 1N 10%	1
C706	J707438P14	CAP CER CL2 10N 10%	1
C707	J707436P10	CAP CER NPO 5P6 .25P	1
C708	J707438P14	CAP CER CL2 10N 10%	1
C709	J707438P14	CAP CER CL2 10N 10%	1
D100	A700047P3	DIO SI SIG 1N6263	1
D101	J706892P1	DIO SI PIN UM 9401	1
D102	J706892P1	DIO SI PIN UM 9401	1
D103	J707390P1	DIO SI SIG BAV 74	1
D300	J707928P2	DIO SI CAP BB 809	1
D301	J707928P2	DIO SI CAP BB 809	1
D302	J707928P2	DIO SI CAP BB 809	1
D303	J707928P2	DIO SI CAP BB 809	1
D304	J707928P2	DIO SI CAP BB 809	1
D305	J707928P2	DIO SI CAP BB 809	1
D306	J707928P2	DIO SI CAP BB 809	1
D307	J707928P2	DIO SI CAP BB 809	1
D401	A700025P8	DIO SI ZENR 6V8 5% 0.4W	1
D501	J707928P2	DIO SI CAP BB 809	1
D502	J707928P2	DIO SI CAP BB 809	1
D503	J707928P2	DIO SI CAP BB 809	1
D504	J707928P2	DIO SI CAP BB 809	1
D505	J707928P2	DIO SI CAP BB 809	1
D506	J707769P1	DIO SI CAP BBY 31	1
D601	J707928P2	DIO SI CAP BB 809	1
D602	J707928P2	DIO SI CAP BB 809	1
D603	J709536P1	DIO SI CAP MV 2111	1
D604	J709536P1	DIO SI CAP MV 2111	1
D605	J707389P1	DIO SI SIG BAV 99	1
D606	J708681P1	DIO SI SIG BAW 56	1
D607	J707390P1	DIO SI SIG BAV 74	1
D608	J707390P1	DIO SI SIG BAV 74	1
D610	J708681P1	DIO SI SIG BAW 56	1
D701	A700073P1	DIO SI CAP BB 409	1
D702	J707390P1	DIO SI SIG BAV 74	1
L100	K805653G9	COIL ASM 9 1/2T	1
L101	A700024P7	COIL RF FIX 0.33UH 10%	1
L102	A700024P3	COIL RF FIX 0.15UH 10%	1
L103	A700024P12	COIL RF FIX 0.82UH 10%	1
L104	K805653G2	COIL ASM 2 1/2T	1
L105	K805653G5	COIL ASM 5 1/2T G1/G2/G3	1
L105	K805653G8	COIL ASM 8 1/2T G4/G5/G6	1
L106	J707339G1	COIL FIX ASM	1
L107	K805653G4	COIL ASM 4 1/2T	1
L108	A700024P3	COIL RF FIX 0.15UH 10%	1
L109	J707256P2	COIL FIX	1
L110	J709287P1	CORE TOR FERR	1
L111	J707256P1	COIL FIX G1/G2/G3	1
L111	J707256G1	COIL ASM 1 1/2T G4/G5/G6	1
L113	A700024P3	COIL RF FIX 0.15UH 10%	1
L114	J709287P1	CORE TOR FERR	1
L115	J707256P2	COIL FIX	1
L116	J709287P1	CORE TOR FERR	1
L117	J709603P2	COIL G1/G2/G3	1
L117	J709603P6	COIL ASM 1 1/2T G4/G5/G6	1
L118	J709603P1	COIL G1/G2/G3	1
L118	J709603P6	COIL FIX G4/G5/G6	1
L121	A700024P18	COIL RF FIX 2.7UH 10%	1
L122	A700024P25	COIL RF FIX 10UH 10%	1
L123	A700024P25	COIL RF FIX 10UH 10%	1
L124	K805653G7	COIL ASM 7 1/2 T	1
L125	K805653G7	COIL ASM 7 1/2 T	1
L126	K805653G8	COIL ASM 8 1/2T	1
L127	A700024P25	COIL RF FIX 10UH 10%	1
L128	A700024P25	COIL RF FIX 10UH 10%	1
L301	J709099P8	COIL RF VAR 7-1/2T	1
L302	J709099P15	COIL RF VAR 7-1/2T TAP	1
L303	J707486P11	COIL RF FIX 2.2UH 10%	1
L304	J709099P8	COIL RF VAR 7-1/2T	1
L305	J707486P2	COIL RF FIX 3.3UH 10%	1
L306	J709099P8	COIL RF VAR 7-1/2T	1
L308	J709099P8	COIL RF VAR 7-1/2T	1

DATE: 10/ 6/1988

Pos	Code No	Description	Qt
L310	J709099P9	COIL RF VAR 7-1/2T TAP	1
L312	J708428P1	COIL RF VAR 45 MHZ	1
L313	J709099P12	COIL RF VAR 5-1/2T TAP	1
L314	J709099P14	COIL RF VAR 5-1/2T TAP	1
L401	J707486P3	COIL RF FIX 6.8UH 10%	1
L403	K805570G6	COIL AS M	1
L405	J708428P1	COIL RF VAR 45 MHZ	1
L406	K805570G5	COIL ASM	1
L407	A700024P25	COIL RF FIX 10UH 10%	1
L408	J708428P1	COIL RF VAR 45 MHZ	1
L409	J707431P1	COIL RF VAR 455KHZ 25%	1
L410	J707431P1	COIL RF VAR 455KHZ 25%	1
L501	A700024P21	COIL RF FIX 4.7UH 10%	1
L502	A700024P21	COIL RF FIX 4.7UH 10%	1
L504	A700024P21	COIL RF FIX 4.7UH 10%	1
L505	L855671P2	COIL RADIO FREQUENCY	1
L506	A700024P21	COIL RF FIX 4.7UH 10%	1
L508	A700024P5	COIL RF FIX 0.22UH 10%	1
L601	A700024P21	COIL RF FIX 4.7UH 10%	1
L602	A700024P21	COIL RF FIX 4.7UH 10%	1
L604	A700024P21	COIL RF FIX 4.7UH 10%	1
L605	L855671P2	COIL RA DIO FREQUENCY	1
L606	A700024P21	COIL RF FIX 4.7UH 10%	1
L607	A700024P4	COIL RF FIX 0.18UH 10%	1
L701	K805570G7	COIL ASM	1
L702	A700024P43	COIL RF FIX 330UH 10%	1
L703	A700024P27	COIL RF FIX 15UH 10%	1
P102	J707064P112	CONN PWB FEM 12-CKT	1
P105	A701883P4	CONN PWB FEM RECP	1
Q100	J707388P1	TSTR NPN SI BFR 53	1
Q101	A701940P1	TSTR NPN SI RF-PWR 0.4W	1
Q102	J709517P1	TSTR NPN SI RF-PWR 3W	1
Q103	J709162P1	TSTR NPN SI RF-PWR 27W G1/G2/G3	1
Q103	J709163P1	TSTR NPN SI RF-PWR 10W G4/G5/G6	1
Q106	J707432P1	TSTR PNP SI BCX 18	1
Q107	J707386P1	TSTR NPN SI BCW 32	1
Q108	J708406P1	TSTR NPN SI BD 233	1
Q109	J707386P1	TSTR NPN SI BCW 32	1
Q201	J707435P1	TSTR PNP SI BC 369	1
Q202	J707386P1	TSTR NPN SI BCW 32	1
Q203	J707432P1	TSTR PNP SI BCX 18	1
Q204	J707386P1	TSTR NPN SI BCW 32	1
Q301	J706011P2	TSTR NPN SI BFR 91A	1
Q302	J707817P1	TSTR JFET SI J 309	1
Q401	J707817P1	TSTR JFET SI J 309	1
Q402	J707817P1	TSTR JFET SI J 309	1
Q403	J707419P1	TSTR JFET SI BF511	1
Q404	J708418P1	TSTR NPN SI BFS 20	1
Q405	J708418P1	TSTR NPN SI BFS 20	1
R121	J707385P333	RES MFLM 1/8W 33K 5%	1
Q407	J707386P1	TSTR NPN SI BCW 32	1
Q408	J707387P1	TSTR PNP SI BCW 30	1
Q501	J707817P1	TSTR JFET SI J 309	1
Q502	J708318P1	TSTR PNP SI BFT 92	1
Q601	J707817P1	TSTR JFET SI J 309	1
Q603	J708318P1	TSTR PNP SI BFT 92	1
Q604	J707433P1	TSTR MFET SI BF 989	1
Q605	J707386P1	TSTR NPN SI BCW 32	1
Q612	J707386P1	TSTR NPN SI BCW 32	1
Q613	J707386P1	TSTR NPN SI BCW 32	1
Q701	J707419P1	TSTR JFET SI BF511	1
Q702	J707387P1	TSTR PNP SI BCW 30	1
R000	J707385P332	RES MFLM 1/8W 3K3 5% G4/G5/G6	1
R100	J707385P101	RES MFLM 1/8W 100R 5%	1
R101	J707385P470	RES MFLM 1/8W 47R 5%	1
R102	J707385P471	RES MFLM 1/8W 470R 5%	1
R103	J707385P390	RES MFLM 1/8W 39R 5%	1
R104	J707385P331	RES MFLM 1/8W 330R 5%	1
R105	J707385P122	RES MFLM 1/8W 1K2 5%	1
R106	J707385P100	RES MFLM 1/8W 10R 5%	1
R107	J707385P100	RES MFLM 1/8W 10R 5%	1
R108	J707385P560	RES MFLM 1/8W 56R 5%	1
R109	J707385P100	RES MFLM 1/8W 10R 5%	1
R110	J707385P100	RES MFLM 1/8W 10R 5 G1/G2/G3	1
R110	J707385P910	RES MFLM 1/8W 1R0 20 G4/G5/G6	1
R111	J707385P220	RES MFLM 1/8W 22R 5%	1
R112	J707385P947	RES MFLM 1/8W 4R7 20%	1
R113	J707385P100	RES MFLM 1/8W 10R 5%	1
R114	J707385P910	RES MFLM 1/8W 1R0 20% G1/G2/G3	1
R114	J707385P918	RES MFLM 1/8W 1R8 20% G4/G5/G6	1
R115	J707385P910	RES MFLM 1/8W 1R0 20% G1/G2/G3	1
R115	J707385P918	RES MFLM 1/8W 1R8 20% G4/G5/G6	1
R116	J707385P121	RES MFLM 1/8W 120R 5%	1

Pos	Code No	Description	Qt
R117	J707385P220	RES MFLM 1/8W 22R 5%	1
R118	J707385P473	RES MFLM 1/8W 47K 5%	1
R119	J707385P820	RES MFLM 1/8W 82R 5%	1
R120	J707385P820	RES MFLM 1/8W 82R 5%	1
R121	J707385P333	RES MFILM 1/8W 33K 5%	1
R122	J707385P221	RES MFLM 1/8W 220R 5%	1
R123	J707385P221	RES MFLM 1/8W 220R 5%	1
R124	J707385P101	RES MFLM 1/8W 100R 5% G1/G2/G3	1
R124	J707385P221	RES MFLM 1/8W 220R 5% G4/G5/G6	1
R125	J707385P330	RES MFLM 1/8W 33R 5%	1
R126	J707385P330	RES MFLM 1/8W 33R 5%	1
R127	J707385P330	RES MFLM 1/8W 33R 5%	1
R128	J707385P100	RES MFLM 1/8W 10R 5%	1
R129	J707385P121	RES MFLM 1/8W 120R 5% G1/G2/G3	1
R129	J707385P560	RES MFLM 1/8W 56R 5% G4/G5/G6	1
R130	J707385P121	RES MFLM 1/8W 120R 5% G1/G2/G3	1
R130	J707385P560	RES MFLM 1/8W 56R 5% G4/G5/G6	1
R131	J707385P392	RES MFLM 1/8W 3K9 5%	1
R132	J708538P9	RES VAR CERM 200K 20%	1
R133	J708538P4	RES VAR CERM 5K0 20%	1
R134	J707385P100	RES MFLM 1/8W 10R 5%	1
R135	J706147P2	RES THERM PTC 80R 25%	1
R136	J707385P682	RES MFLM 1/8W 6K8 5%	1
R137	J707385P223	RES MFLM 1/8W 22K 5%	1
R138	J707385P472	RES MFLM 1/8W 4K7 5%	1
R139	J707385P472	RES MFLM 1/8W 4K7 5%	1
R140	J707385P333	RES MFLM 1/8W 33K 5%	1
R141	J707385P333	RES MFLM 1/8W 33K 5%	1
R142	J707385P104	RES MFLM 1/8W 100K 5%	1
R143	J707385P222	RES MFLM 1/8W 2K2 5%	1
R144	J707385P222	RES MFLM 1/8W 2K2 5%	1
R145	J707385P223	RES MFLM 1/8W 22K 5%	1
R146	J707385P104	RES MFLM 1/8W 100K 5%	1
R147	J707385P104	RES MFLM 1/8W 100K 5%	1
R148	J707385P123	RES MFLM 1/8W 12K 5%	1
R149	J707385P472	RES MFLM 1/8W 4K7 5%	1
R150	J707385P102	RES MFLM 1/8W 1K0 5%	1
R151	J707385P683	RES MFLM 1/8W 68K 5%	1
R152	J707385P104	RES MFLM 1/8W 100K 5%	1
R153	J707385P472	RES MFLM 1/8W 4K7 5%	1
R154	J707385P274	RES MFLM 1/8W 270K 5%	1
R155	J707385P682	RES MFLM 1/8W 6K8 5%	1
R156	J707385P102	RES MFLM 1/8W 1K0 5%	1
R157	J707385P100	RES MFLM 1/8W 10R 5%	1
R158	J707385P102	RES MFLM 1/8W 1K0 5%	1
R159	J707385P472	RES MFLM 1/8W 4K7 5%	1
R160	J707385P104	RES MFLM 1/8W 100K 5%	1
R161	J709725P1	RES THERM PTC 1K0	1
R162	J707385P220	RES MFLM 1/8W 22R 5%	1
R201	J707385P561	RES MFLM 1/8W 560R 5%	1
R202	J707385P271	RES MFLM 1/8W 270R 5%	1
R203	J707385P153	RES MFLM 1/8W 15K 5%	1
R204	J707385P153	RES MFLM 1/8W 15K 5%	1
R205	J707385P472	RES MFLM 1/8W 4K7 5%	1
R206	J707385P272	RES MFLM 1/8W 2K7 5%	1
R207	J707385P563	RES MFLM 1/8W 56K 5%	1
R208	J707385P563	RES MFLM 1/8W 56K 5%	1
R209	J707385P271	RES MFLM 1/8W 270R 5%	1
R210	J707385P331	RES MFLM 1/8W 330R 5%	1
R301	J707385P331	RES MFLM 1/8W 330R 5%	1
R302	J707385P392	RES MFLM 1/8W 3K9 5%	1
R303	J707385P104	RES MFLM 1/8W 100K 5%	1
R304	J707385P104	RES MFLM 1/8W 100K 5%	1
R306	J707385P272	RES MFLM 1/8W 2K7 5%	1
R307	J707385P681	RES MFLM 1/8W 680R 5%	1
R308	J707385P470	RES MFLM 1/8W 47R 5%	1
R309	J707385P270	RES MFLM 1/8W 27R 5%	1
R310	J707385P104	RES MFLM 1/8W 100K 5%	1
R311	J707385P101	RES MFLM 1/8W 100R 5%	1
R312	J707385P104	RES MFLM 1/8W 100K 5%	1
R313	J707385P123	RES MFLM 1/8W 12K 5%	1
R314	J707385P104	RES MFLM 1/8W 100K 5%	1
R315	J707385P822	RES MFLM 1/8W 8K2 5%	1
R316	J707385P104	RES MFLM 1/8W 100K 5%	1
R317	J707385P471	RES MFLM 1/8W 470R 5%	1
R318	J707385P100	RES MFLM 1/8W 10R 5%	1
R319	J707385P101	RES MFLM 1/8W 100R 5%	1
R320	J707385P222	RES MFLM 1/8W 2K2 5%	1
R321	J707385P270	RES MFLM 1/8W 27R 5%	1
R322	J707385P471	RES MFLM 1/8W 470R 5%	1
R323	J707385P104	RES MFLM 1/8W 100K 5%	1
R324	J707385P104	RES MFLM 1/8W 100K 5%	1
R325	J707385P100	RES MFLM 1/8W 10R 5%	1

Pos	Code No	Description	Qt
R327	J707385P123	RES MFLM 1/8W 12K 5%	1
R328	J707385P332	RES MFLM 1/8W 3K3 5%	1
R329	J707385P102	RES MFLM 1/8W 1K0 5%	1
R401	J707385P390	RES MFLM 1/8W 39R 5%	1
R402	J707385P100	RES MFLM 1/8W 10R 5%	1
R403	J707385P222	RES MFLM 1/8W 2K2 5%	1
R404	J707385P472	RES MFLM 1/8W 4K7 5%	1
R405	J707385P100	RES MFLM 1/8W 10R 5%	1
R406	J707385P820	RES MFLM 1/8W 82R 5%	1
R407	J707385P470	RES MFLM 1/8W 47R 5%	1
R408	J707385P470	RES MFLM 1/8W 47R 5%	1
R409	J707385P332	RES MFLM 1/8W 3K3 5%	1
R410	J707385P471	RES MFLM 1/8W 470R 5%	1
R411	J707385P123	RES MFLM 1/8W 12K 5%	1
R412	J707385P472	RES MFLM 1/8W 4K7 5%	1
R413	J707385P821	RES MFLM 1/8W 820R 5%	1
R414	J707385P332	RES MFLM 1/8W 3K3 5%	1
R415	J707385P222	RES MFLM 1/8W 2K2 5%	1
R416	J707385P562	RES MFLM 1/8W 5K6 5%	1
R417	J707385P103	RES MFLM 1/8W 10K 5%	1
R418	J707385P153	RES MFLM 1/8W 15K 5%	1
R419	J707385P182	RES MFLM 1/8W 1K8 5%	1
R420	J707385P182	RES MFLM 1/8W 1K8 5%	1
R421	J707385P182	RES MFLM 1/8W 1K8 5%	1
R422	J707385P473	RES MFLM 1/8W 47K 5%	1
R423	J707385P153	RES MFLM 1/8W 15K 5%	1
R424	J708538P5	RES VAR CERM 10K 20%	1
R425	J707385P272	RES MFLM 1/8W 2K7 5%	1
R426	J707385P333	RES MFLM 1/8W 33K 5% G1/G4	1
R426	J707385P473	RES MFLM 1/8W 47K 5% G2/G3/G5/G6	1
R427	J707385P473	RES MFLM 1/8W 47K 5% G1/G3/G4/G6	1
R427	J707385P393	RES MFLM 1/8W 39K 5% G2/G5	1
R428	J707385P393	RES MFLM 1/8W 39K 5% G1/G4	1
R428	J707385P563	RES MFLM 1/8W 56K 5% G2/G3/G5/G6	1
R429	J707385P104	RES MFLM 1/8W 100K 5%	1
R430	J709329P447	RES MFLM 1/8W 301K 5% G1/G2/G4/G5	1
R430	J707385P334	RES MFLM 1/8W 330K 5% G3/G6	1
R431	J707385P473	RES MFLM 1/8W 47K 5%	1
R432	J707385P473	RES MFLM 1/8W 47K 5%	1
R433	J707385P271	RES MFLM 1/8W 270R 5%	1
R434	J707385P102	RES MFLM 1/8W 1K0 5%	1
R435	J706147P3	RES THERM PTC 250R 25%	1
R436	J707385P392	RES MFLM 1/8W 3K9 5%	1
R437	J707406P7	RES THERM NTC 220R 10%	1
R438	J707385P222	RES MFLM 1/8W 2K2 5%	1
R439	J707385P392	RES MFLM 1/8W 3K9 5%	1
R440	J707385P392	RES MFLM 1/8W 3K9 5%	1
R441	J707385P101	RES MFLM 1/8W 100R 5%	1
R442	J708538P6	RES VAR CERM 20K 20%	1
R444	J707385P473	RES MFLM 1/8W 47K 5%	1
R445	J707385P273	RES MFLM 1/8W 27K 5%	1
R446	J707385P224	RES MFLM 1/8W 220K 5%	1
R447	J707385P392	RES MFLM 1/8W 3K9 5%	1
R448	J707385P101	RES MFLM 1/8W 100R 5%	1
R449	J707385P470	RES MFLM 1/8W 47R 5%	1
R450	J707385P103	RES MFLM 1/8W 10K 5%	1
R452	J707385P332	RES MFLM 1/8W 3K3 5%	1
R501	J707385P821	RES MFLM 1/8W 820R 5%	1
R502	J707385P821	RES MFLM 1/8W 820R 5%	1
R504	J707385P104	RES MFLM 1/8W 100K 5%	1
R505	J707385P104	RES MFLM 1/8W 100K 5%	1
R508	J707385P103	RES MFLM 1/8W 10K 5%	1
R509	J707385P151	RES MFLM 1/8W 150R 5%	1
R510	J707385P103	RES MFLM 1/8W 10K 5%	1
R512	J707385P561	RES MFLM 1/8W 560R 5%	1
R513	J707385P272	RES MFLM 1/8W 2K7 5%	1
R514	J707385P682	RES MFLM 1/8W 6K8 5%	1
R515	J707385P221	RES MFLM 1/8W 220R 5%	1
R516	J707385P221	RES MFLM 1/8W 220R 5%	1
R517	J707385P101	RES MFLM 1/8W 100R 5%	1
R518	J707385P100	RES MFLM 1/8W 10R 5%	1
R529	J707385P392	RES MFLM 1/8W 3K9 5%	1
R601	J706035P52	RES MFLM 1/8W 180k 5%	1
R602	J707385P122	RES MFLM 1/8W 1K2 5%	1
R603	J707385P122	RES MFLM 1/8W 1K2 5%	1
R605	J707385P104	RES MFLM 1/8W 100K 5%	1
R606	J707385P104	RES MFLM 1/8W 100K 5%	1
R607	J707385P561	RES MFLM 1/8W 560R 5%	1
R608	J707385P682	RES MFLM 1/8W 6K8 5%	1
R609	J707385P332	RES MFLM 1/8W 3K3 5%	1
R610	J707385P331	RES MFLM 1/8W 330R 5%	1
R611	J707385P151	RES MFLM 1/8W 150R 5%	1
R612	J707385P102	RES MFLM 1/8W 1K0 5%	1

Pos	Code No	Description	Qt
R613	J707385P101	RES MFLM 1/8W 100R 5%	1
R614	J707385P272	RES MFLM 1/8W 2K7 5%	1
R615	J707385P682	RES MFLM 1/8W 6K8 5%	1
R616	J707385P104	RES MFLM 1/8W 100K 5%	1
R617	J707385P102	RES MFLM 1/8W 1K0 5%	1
R618	J707385P331	RES MFLM 1/8W 330R 5%	1
R619	J707385P681	RES MFLM 1/8W 680R 5%	1
R620	J707385P224	RES MFLM 1/8W 220K 5%	1
R621	J707385P223	RES MFLM 1/8W 22K 5%	1
R622	J707385P101	RES MFLM 1/8W 100R 5%	1
R623	J707385P100	RES MFLM 1/8W 10R 5%	1
R624	J707385P103	RES MFLM 1/8W 10K 5%	1
R625	J707385P224	RES MFLM 1/8W 220K 5%	1
R626	J707385P124	RES MFLM 1/8W 120K 5%	1
R627	J707385P100	RES MFLM 1/8W 10R 5%	1
R628	J707385P684	RES MFLM 1/8W 680K 5%	1
R629	J707385P223	RES MFLM 1/8W 22K 5%	1
R630	J707385P824	RES MFLM 1/8W 820K 5%	1
R631	J707385P123	RES MFLM 1/8W 12K 5%	1
R632	J707385P102	RES MFLM 1/8W 1K0 5%	1
R633	J707385P332	RES MFLM 1/8W 3K3 5%	1
R634	J707385P181	RES MFLM 1/8W 180R 5%	1
R635	J707385P474	RES MFLM 1/8W 470K 5%	1
R636	J707385P333	RES MFLM 1/8W 33K 5%	1
R637	J707385P105	RES MFLM 1/8W 1M0 10%	1
R638	J707385P184	RES MFLM 1/8W 180K 5%	1
R639	J707385P184	RES MFLM 1/8W 180K 5%	1
R640	J707385P105	RES MFLM 1/8W 1M0 10%	1
R641	J707385P473	RES MFLM 1/8W 47K 5%	1
R642	J707385P153	RES MFLM 1/8W 15K 5%	1
R643	J707385P393	RES MFLM 1/8W 39K 5%	1
R644	J707385P333	RES MFLM 1/8W 33K 5%	1
R645	J707385P473	RES MFLM 1/8W 47K 5%	1
R646	J707385P562	RES MFLM 1/8W 5K6 5%	1
R647	J707385P473	RES MFLM 1/8W 47K 5%	1
R649	J707385P223	RES MFLM 1/8W 22K 5%	1
R650	J707385P823	RES MFLM 1/8W 82K 5%	1
R651	J707385P153	RES MFLM 1/8W 15K 5%	1
R652	J707385P183	RES MFLM 1/8W 18K 5%	1
R653	J707385P393	RES MFLM 1/8W 39K 5%	1
R654	J707385P823	RES MFLM 1/8W 82K 5%	1
R655	J707385P154	RES MFLM 1/8W 150K 5%	1
R656	J707385P223	RES MFLM 1/8W 22K 5%	1
R657	J707385P333	RES MFLM 1/8W 33K 5%	1
R658	J707385P473	RES MFLM 1/8W 47K 5%	1
R659	J707385P473	RES MFLM 1/8W 47K 5%	1
R660	J708538P6	RES VAR CERM 20K 20%	1
R661	J707385P473	RES MFLM 1/8W 47K 5%	1
R662	J707385P824	RES MFLM 1/8W 820K 5%	1
R663	J707385P124	RES MFLM 1/8W 120K 5%	1
R664	J707385P124	RES MFLM 1/8W 120K 5%	1
R665	J707385P122	RES MFLM 1/8W 1K2 5%	1
R666	J707385P221	RES MFLM 1/8W 220R 5%	1
R667	J707385P103	RES MFLM 1/8W 10K 5%	1
R668	J707385P562	RES MFLM 1/8W 5K6 5%	1
R669	J707385P822	RES MFLM 1/8W 8K2 5%	1
R670	J707385P822	RES MFLM 1/8W 8K2 5%	1
R671	J707385P101	RES MFLM 1/8W 100R 5%	1
R672	J708538P5	RES VAR CERM 10K 20%	1
R673	J707385P562	RES MFLM 1/8W 5K6 5%	1
R674	J708538P5	RES VAR CERM 10K 20%	1
R675	J707385P470	RES MFLM 1/8W 47R 5%	1
R676	J707385P821	RES MFLM 1/8W 820R 5%	1
R677	J708538P7	RES VAR CERM 50K 20%	1
R678	J707385P223	RES MFLM 1/8W 22K 5%	1
R679	J707385P152	RES MFLM 1/8W 1K5 5%	1
R680	J707385P223	RES MFLM 1/8W 22K 5%	1
R681	J707385P183	RES MFLM 1/8W 18K 5%	1
R682	J707385P183	RES MFLM 1/8W 18K 5%	1
R683	J707385P103	RES MFLM 1/8W 10K 5%	1
R684	J707385P103	RES MFLM 1/8W 10K 5%	1
R685	J707385P105	RES MFLM 1/8W 1M0 10%	1
R686	J707385P124	RES MFLM 1/8W 120K 5%	1
R687	J707385P273	RES MFLM 1/8W 27K 5%	1
R689	J707385P223	RES MFLM 1/8W 22K 5%	1
R690	J707385P105	RES MFLM 1/8W 1M0 10%	1
R691	J707385P223	RES MFLM 1/8W 22K 5%	1
R692	J707385P105	RES MFLM 1/8W 1M0 10%	1
R693	J707385P223	RES MFLM 1/8W 22K 5%	1
R694	J707385P105	RES MFLM 1/8W 1M0 10%	1
R695			
R696			
R697			

DATE: 10/ 6/1988

Pos	Code No	Description	Qt
R698	J707385P103	RES MFLM 1/8W 10K 5%	1
R699	J707385P392	RES MFLM 1/8W 3K9 5%	1
R702	A701250P413	RES MFILM 133K 1% 1/4W	1
R703	A701250P213	RES MFILM 1K33 1% 1/4W	1
R704	A701250P326	RES MFILM 18K2 1% 1/4W	1
R707	J707385P104	RES MFLM 1/8W 100K 5%	1
R708	J707385P105	RES MFLM 1/8W 1MO 10%	1
R709	J707385P181	RES MFLM 1/8W 180R 5%	1
R710	J707385P101	RES MFLM 1/8W 100R 5%	1
R711	J707385P223	RES MFLM 1/8W 22K 5%	1
R712	J707385P154	RES MFLM 1/8W 150K 5%	1
R713	J707385P821	RES MFLM 1/8W 820R 5%	1
R714	J707385P104	RES MFLM 1/8W 100K 5%	1
R715	J707385P563	RES MFLM 1/8W 56K 5%	1
U100	J708165P2	IC LIN OP-AMP 324	1
U201	J708333P1	IC LIN VR FIX 4785	1
U401	J707449P1	IC LIN IF-AMP 3357	1
U402	M905766G1	INT CKT SQ 4002 G1/G2/G5/G4	1
U402	M905766G2	INT CKT SQ 4003 G6/G3	1
U601	J707859P1	IC LIN OP-AMP 204	1
U602	J707859P1	IC LIN OP-AMP 204	1
U604	J707859P1	IC LIN OP-AMP 204	1
U606	J707243P1	IC DIG REG 4094	1
U607	J707374P1	IC PLL PRESC 8793	1
U608	B800902P1	IC PLL SYN CUSTOM DES	1
U609	J707859P1	IC LIN OP-AMP 204	1
U610	J708503P2	IC LIN CMPAR LM 339	1
U615	J708621P2	CPLR OPTO PC 827	1
U616	J708503P2	IC LIN CMPAR LM 339	1
W003	J707256P1	COIL FIX	1
W004	J707256P1	COIL FIX	1
W005	J708717P1	STRAP	1
W006	J708716P1	STRAP	1
Y401	J707309P1	CRYSTAL UNIT 20.9450MHZ	1
Y701	J707567P19	CRYSTAL UNIT 7.4000MHZ	1
Z401	J707310P1	FLTR CRY 21.4 +/-7.50KHZ G1/G4	1
Z401	J707310P2	FLTR CRY 21.4 +/-7.50KHZ G2/G5	1
Z401	J707310P3	FLTR CRY 21.4 +/-3.75KHZ G3/G6	1
Z402	J707446P1	FLTR CER 455K +/-10KHZ G1/G4	1
Z402	J707446P3	FLTR CER 455K +/-7.5KHZ G2/G5	1
Z402	J707446P4	FLTR CER 455K +/-4.5KHZ G3/G6	1
Z403	J707446P1	FLTR CER 455K +/-10KHZ G1/G4	1
Z403	J707446P3	FLTR CER 455K +/-7.5KHZ G2/G5	1
Z403	J707446P4	FLTR CER 455K +/-4.5KHZ G3/G6	1
	M905893P1R2	BD PW	1
		NON ELECTRONICAL PARTS	
	J708561P3	COIL FIX	1
	K805776P1	CASTING HEAT SINK	1
	K805569G2	SHIELD METALLIZED	1
	J706281P7	CORE SCREW FERR U 25	8
	J706804P2	WASH INS CRYS FOR HC-18/U	4

Pos	Code No	Description	Qt

DAT 5/16/1988

Pos	Code No	Description	Qt
C100	J707809P13	CAP CER NPO 10P 5%	1
C101	J707438P4	CAP CER CL2 680P 10%	1
C102	J707438P7	CAP CER CL2 2N2 10%	1
C103	J707436P65	CAP CER NPO 150P 5%	1
C104	J707809P15	CAP CER NPO 15P 5%	1
C105	J707809P17	CAP CER NPO 22P 5%	1
C106	J707809P15	CAP CER NPO 15P 5%	1
C107	J707438P7	CAP CER CL2 2N2 10%	1
C108	J707438P7	CAP CER CL2 2N2 10%	1
C109	J707809P25	CAP CER NPO 100P 5%	1
C110	J707809P23	CAP CER NPO 68P 5% G1/G2/G3	1
C110	J707809P17	CAP CER NPO 22P 5% G4/G5/G6	1
C111	J707438P7	CAP CER CL2 2N2 10%	1
C112	J707438P14	CAP CER CL2 10N 10%	1
C113	J707438P7	CAP CER CL2 2N2 10%	1
C114	J707438P7	CAP CER CL2 2N2 10%	1
C115	J707809P27	CAP CER NPO 150P 5% G1/G2/G3	1
C115	J707809P23	CAP CER NPO 68P 5% G4/G5/G6	1
C116	J707809P27	CAP CER NPO 150P 5% G1/G2/G3	1
C116	J707809P24	CAP CER NPO 82P 5% G4/G5/G6	1
C120	J707353P6	CAP ELECT 4U7 25V	1
C121	J707438P14	CAP CER CL2 10N 10%	1
C122	J707438P7	CAP CER CL2 2N2 10%	1
C123	J707438P14	CAP CER CL2 10N 10%	1
C124	J707438P7	CAP CER CL2 2N2 10%	1
C125	A700006P40	CAP MICA 170P 5% G1/G2/G3	1
C125	A700006P38	CAP MICA 150P 5% G4/G5/G6	1
C126	J709524P59	CAP CER RF 270P 5% G1/G2/G3	1
C126	J709524P49	CAP CER RF 100P 5% G4/G5/G6	1
C127	J709524P51	CAP CER RF 120P 5% G1/G2/G3	1
C127	J709524P45	CAP CER RF 68P 5% G4/G5/G6	1
C128	A700006P35	CAP MICA 110P 5% G1/G2/G3	1
C128	A700006P26	CAP MICA 47P 5% G4/G5/G6	1
C130	J707809P14	CAP CER NPO 12P 5%	1
C131	J707809P9	CAP CER NPO 4P7 .25P	1
C132	J707809P12	CAP CER NPO 8P2 .25P	1
C133	J707809P12	CAP CER NPO 8P2 .25P	1

Pos	Code No	Description	Qt
C134	J707353P6	CAP ELECT 4U7 25V	1
C136	J707438P20	CAP CER CL2 33N 10%	1
C137	J707438P7	CAP CER CL2 2N2 10%	1
C138	J707438P7	CAP CER CL2 2N2 10%	1
C139	J707438P7	CAP CER CL2 2N2 10%	1
C140	J707438P7	CAP CER CL2 2N2 10%	1
C141	J707438P7	CAP CER CL2 2N2 10%	1
C142	A700006P14	CAP MICA 18P 5%	1
C143	A700006P26	CAP MICA 47P 5%	1
C144	A700006P26	CAP MICA 47P 5%	1
C145	A700006P18	CAP MICA 24P 5%	1
C146	J707438P7	CAP CER CL2 2N2 10%	1
C147	J707438P7	CAP CER CL2 2N2 10%	1
C148	J707438P7	CAP CER CL2 2N2 10%	1
C149	J707438P7	CAP CER CL2 2N2 10%	1
C150	J707809P10	CAP CER NPO 5P6 .25P G1/G2/G3	1
C150	J707809P12	CAP CER NPO 5P6 .25P G4/G5/G6	1
C151	J707809P10	CAP CER NPO 5P6 .25P G1/G2/G3	1
C151	J707809P12	CAP CER NPO 5P6 .25P G4/G5/G6	1
C152	J707438P7	CAP CER CL2 2N2 10%	1
C153	J707438P7	CAP CER CL2 2N2 10%	1
C154	J707438P7	CAP CER CL2 2N2 10%	1
C155	J707438P7	CAP CER CL2 2N2 10%	1
C156	J707353P3	CAP ELECT 0U47 50V	1
C157	J707438P7	CAP CER CL2 2N2 10%	1
C158	J707438P7	CAP CER CL2 2N2 10%	1
C159	J707438P14	CAP CER CL2 10N 10%	1
C160	J707436P77	CAP CER NPO 470P 5%	1
C161	J707438P7	CAP CER CL2 2N2 10%	1
C162	J707438P14	CAP CER CL2 10N 10%	1
C163	J707438P20	CAP CER CL2 33N 10%	1
C164	J707438P7	CAP CER CL2 2N2 10%	1
C165	J707809P16	CAP CER NPO 18P 5% G1/G2/G3	1
C165	J707809P17	CAP CER NPO 22P 5% G4/G5/G6	1
C166	J707438P5	CAP CER CL2 1N 10%	1
C167	J707412P13	CAP PYES 470N 10%	1
C168	J707438P7	CAP CER CL2 2N2 10%	1

DATE: 5/16/1988

Pos	Code No	Description	Qt
C169	J707809P1	CAP CER NPO 1P0 .25P	1
C170	J707438P14	CAP CER CL2 10N 10%	1
C171	J707438P14	CAP CER CL2 10N 10%	1
C172	J707438P14	CAP CER CL2 10N 10%	1
C201	J707438P26	CAP CER CL2 100N 10%	1
C202	J707444P8	CAP TA SOL 22U 16V	1
C203	J706005P12	CAP ELECT 47U 40V	1
C204	J707438P7	CAP CER CL2 2N2 10%	1
C205	J707412P9	CAP PYES 100N 10%	1
C206	J707444P4	CAP TA SOL 1U 35V	1
C301	J707436P69	CAP CER NPO 220P 5%	1
C302	J707438P5	CAP CER CL2 1N 10%	1
C304	J707436P10	CAP CER NPO 5P6 .25P	1
C305	J707436P33	CAP CER NPO 27P 5%	1
C306	J707483P4	CAP PHEN 0P56 5%	1
C307	J707438P5	CAP CER CL2 1N 10%	1
C309	J707436P33	CAP CER NPO 27P 5%	1
C310	J707438P5	CAP CER CL2 1N 10%	1
C311	J707436P10	CAP CER NPO 5P6 .25P	1
C312	J707436P87	CAP CER NPO 1N2 5%	1
C315	J707436P10	CAP CER NPO 5P6 .25P	1
C317	J707444P2	CAP TA SOL 0U22 35V	1
C318	J707438P5	CAP CER CL2 1N 10%	1
C319	J707436P33	CAP CER NPO 27P 5%	1
C320	J707438P5	CAP CER CL2 1N 10%	1
C322	J707483P7	CAP PHEN 1P00 5%	1
C323	J707483P6	CAP PHEN 0P82 5%	1
C324	J707436P7	CAP CER NPO 3P3 .25P	1
C325	J707438P5	CAP CER CL2 1N 10%	1
C326	J707436P33	CAP CER NPO 27P 5%	1
C328	J707436P33	CAP CER NPO 27P 5%	1
C331	J707483P6	CAP PHEN 0P82 5%	1
C332	J707436P33	CAP CER NPO 27P 5%	1
C333	J707436P7	CAP CER NPO 3P3 .25P	1
C334	J707436P8	CAP CER NPO 3P9 .25P	1
C335	J707438P5	CAP CER CL2 1N 10%	1
C338	J707436P37	CAP CER NPO 33P 5%	1

Pos	Code No	Description	Qt
C339	J707438P5	CAP CER CL2 1N 10%	1
C340	J707438P8	CAP CER CL2 3N3 10%	1
C345	J707438P5	CAP CER CL2 1N 10%	1
C347	J707438P5	CAP CER CL2 1N 10%	1
C348	J707438P5	CAP CER CL2 1N 10%	1
C350	J707436P10	CAP CER NPO 5P6 .25P	1
C351	J707436P25	CAP CER NPO 18P 5%	1
C353	J707483P8	CAP PHEN 1P20 5%	1
C354	J707436P25	CAP CER NPO 18P 5%	1
C355	J707436P9	CAP CER NPO 4P7 .25P	1
C356	J707438P5	CAP CER CL2 1N 10%	1
C357	J707436P1	CAP CER NPO 1P0 .25P	1
C358	J707436P1	CAP CER NPO 1P0 .25P	1
C359	J707438P5	CAP CER CL2 1N 10%	1
C401	J707438P8	CAP CER CL2 3N3 10%	1
C402	J707438P8	CAP CER CL2 3N3 10%	1
C403	J707438P8	CAP CER CL2 3N3 10%	1
C404	J707436P37	CAP CER NPO 33P 5%	1
C405	J707438P26	CAP CER CL2 100N 10%	1
C406	J707436P10	CAP CER NPO 5P6 .25P	1
C407	J707436P33	CAP CER NPO 27P 5%	1
C408	J707438P5	CAP CER CL2 1N 10%	1
C409	J707438P8	CAP CER CL2 3N3 10%	1
C410	J707444P8	CAP TA SOL 22U 16V	1
C411	J707438P26	CAP CER CL2 100N 10%	1
C412	J707438P26	CAP CER CL2 100N 10%	1
C413	J707436P37	CAP CER NPO 33P 5%	1
C414	J707438P8	CAP CER CL2 3N3 10%	1
C415	J707436P69	CAP CER NPO 220P 5%	1
C416	J707436P61	CAP CER NPO 100P 5%	1
C417	J707436P33	CAP CER NPO 27P 5%	1
C418	J707438P14	CAP CER CL2 10N 10%	1
C419	J707438P26	CAP CER CL2 100N 10%	1
C420	J707438P14	CAP CER CL2 10N 10%	1
C421	J707438P26	CAP CER CL2 100N 10%	1
C422	J707438P26	CAP CER CL2 100N 10%	1
C423	J707436P13	CAP CER NPO 10P 5%	1

Pos	Code No	Description	Qt
C424	J707438P8	CAP CER CL2 3N3 10%	1
C425	J707412P13	CAP PYES 470N 10%	1
C426	J707436P93	CAP CER NPO 2N2 5%	1
C427	J707436P73	CAP CER NPO 330P 5%	1
C428	J707436P73	CAP CER NPO 330P 5%	1
C429	J707438P14	CAP CER CL2 10N 10%	1
C430	J707444P8	CAP TA SOL 22U 16V	1
C431	J707444P8	CAP TA SOL 22U 16V	1
C432	J707438P26	CAP CER CL2 100N 10%	1
C433	J707438P26	CAP CER CL2 100N 10%	1
C434	J707438P8	CAP CER CL2 3N3 10%	1
C435	J707436P1	CAP CER NPO 1P0 .25P	1
C436	J707438P26	CAP CER CL2 100N 10%	1
C437	J707436P45	CAP CER NPO 47P 5%	1
C438	J707438P14	CAP CER CL2 10N 10%	1
C501	J707412P11	CAP PYES 220N 10%	1
C502	J707412P11	CAP PYES 220N 10%	1
C504	A700235P16	CAP CER N150 18P 5%	1
C505	A700235P11	CAP CER N150 6P8 .25P	1
C506	A700235P20	CAP CER N150 39P 5%	1
C507	A700235P19	CAP CER N150 33P 5%	1
C508	A700235P25	CAP CER N150 100P 5%	1
C509	J707436P9	CAP CER NPO 4P7 .25P	1
C512	J707436P8	CAP CER NPO 3P9 .25P	1
C513	J707438P2	CAP CER CL2 330P 10%	1
C514	J707438P6	CAP CER CL2 1N5 10%	1
C517	J707444P6	CAP TA SOL 4U7 35V	1
C518	J707436P2	CAP CER NPO 1P2 .25P	1
C519	J707438P6	CAP CER CL2 1N5 10%	1
C520	J707436P69	CAP CER NPO 220P 5%	1
C521	J707436P29	CAP CER NPO 22P 5%	1
C522	J707438P6	CAP CER CL2 1N5 10%	1
C523	J707436P5	CAP CER NPO 2P2 .25P	1
C524	J707438P3	CAP CER CL2 470P 10%	1
C525	J707438P3	CAP CER CL2 470P 10%	1
C527	J707438P3	CAP CER CL2 470P 10%	1
C528	J707438P26	CAP CER CL2 100N 10%	1

Pos	Code No	Description	Qt
C540	J707438P3	CAP CER CL2 470P 10%	1
C541	J707438P3	CAP CER CL2 470P 10%	1
C543	J707438P3	CAP CER CL2 470P 10%	1
C544	J707438P3	CAP CER CL2 470P 10%	1
C545	J707436P61	CAP CER NPO 100P 5%	1
C601	J707412P11	CAP PYES 220N 10%	1
C602	J707412P11	CAP PYES 220N 10%	1
C603	J707438P26	CAP CER CL2 100N 10%	1
C604	A700235P13	CAP CER N150 10P 5%	1
C605	A700235P10	CAP CER N150 5P6 .25P	1
C606	A700235P38	CAP CER N150 16P 5%	1
C607	A700235P11	CAP CER N150 6P8 .25P	1
C608	A700233P9	CAP CER CL2 2N2 20%	1
C610	J707436P61	CAP CER NPO 100P 5%	1
C611	J707436P6	CAP CER NPO 2P7 .25P	1
C612	J707438P6	CAP CER CL2 1N5 10%	1
C613	J707444P6	CAP TA SOL 4U7 35V	1
C614	J707438P6	CAP CER CL2 1N5 10%	1
C615	J707438P10	CAP CER CL2 4N7 10%	1
C616	J707438P4	CAP CER CL2 680P 10%	1
C617	J707436P49	CAP CER NPO 56P 5%	1
C618	J707436P1	CAP CER NPO 1P0 .25P	1
C619	J707438P6	CAP CER CL2 1N5 10%	1
C620	J707436P61	CAP CER NPO 100P 5%	1
C621	J707436P21	CAP CER NPO 15P 5%	1
C622	J707436P5	CAP CER NPO 2P2 .25P	1
C623	J707438P26	CAP CER CL2 100N 10%	1
C624	J707436P61	CAP CER NPO 100P 5%	1
C625	J707438P6	CAP CER CL2 1N5 10%	1
C626	J707438P5	CAP CER CL2 1N 10%	1
C627	J707438P26	CAP CER CL2 100N 10%	1
C628	J707436P3	CAP CER NPO 1P5 .25P	1
C629	J707436P65	CAP CER NPO 150P 5%	1
C630	J707438P26	CAP CER CL2 100N 10%	1
C631	J707438P6	CAP CER CL2 1N5 10%	1
C632	J707444P6	CAP TA SOL 4U7 35V	1
C633	J707444P17	CAP TA SOL 47U 10V	1

DATE: 5/16/1988

Pos	Code No	Description	Qt
C634	J707438P26	CAP CER CL2 100N 10%	1
C635	J707438P1	CAP CER CL2 220P 10%	1
C636	J707444P17	CAP TA SOL 47U 10V	1
C637	J707438P26	CAP CER CL2 100N 10%	1
C638	J707438P5	CAP CER CL2 1N 10%	1
C639	J707438P8	CAP CER CL2 3N3 10%	1
C640	J707412P8	CAP PYES 68N 10%	1
C641	J707412P13	CAP PYES 470N 10%	1
C642	J707412P13	CAP PYES 470N 10%	1
C643	J707438P26	CAP CER CL2 100N 10%	1
C644	J707436P6	CAP CER NPO 2P7 .25P	1
C645	J707436P25	CAP CER NPO 18P 5%	1
C646	J707436P63	CAP CER NPO 120P 5%	1
C647	J707436P13	CAP CER NPO 10P 5%	1
C652	J707438P22	CAP CER CL2 47N 10%	1
C653	J707444P6	CAP TA SOL 4U7 35V	1
C656	J707438P3	CAP CER CL2 470P 10%	1
C657	J707438P3	CAP CER CL2 470P 10%	1
C659	J707438P5	CAP CER CL2 1N 10%	1
C660	J707438P14	CAP CER CL2 10N 10%	1
C666	J707438P3	CAP CER CL2 470P 10%	1
C667	J707438P3	CAP CER CL2 470P 10%	1
C701	J707436P29	CAP CER NPO 22P 5%	1
C702	J708702P22	CAP CER N750 56P 5%	1
C703	J707436P69	CAP CER NPO 220P 5%	1
C705	J707438P5	CAP CER CL2 1N 10%	1
C706	J707438P14	CAP CER CL2 10N 10%	1
C707	J707436P10	CAP CER NPO 5P6 .25P	1
C708	J707438P14	CAP CER CL2 10N 10%	1
C709	J707438P14	CAP CER CL2 10N 10%	1
D100	A700047P3	DIO SI SIG 1N6263	1
D101	J706892P1	DIO SI PIN UM 9401	1
D102	J706892P1	DIO SI PIN UM 9401	1
D103	J707390P1	DIO SI SIG BAV 74	1
D300	J707928P2	DIO SI CAP BB 809	1
D301	J707928P2	DIO SI CAP BB 809	1
D302	J707928P2	DIO SI CAP BB 809	1

Pos	Code No	Description	Qt
D303	J707928P2	DIO SI CAP BB 809	1
D304	J707928P2	DIO SI CAP BB 809	1
D305	J707928P2	DIO SI CAP BB 809	1
D306	J707928P2	DIO SI CAP BB 809	1
D307	J707928P2	DIO SI CAP BB 809	1
D401	A700025P8	DIO SI ZENR 6V8 5% 0.4W	1
D501	J707928P2	DIO SI CAP BB 809	1
D502	J707928P2	DIO SI CAP BB 809	1
D503	J707928P2	DIO SI CAP BB 809	1
D504	J707928P2	DIO SI CAP BB 809	1
D505	J707928P2	DIO SI CAP BB 809	1
D506	J707769P1	DIO SI CAP BBY 31	1
D601	J707928P2	DIO SI CAP BB 809	1
D602	J707928P2	DIO SI CAP BB 809	1
D603	J709536P1	DIO SI CAP MV 2111	1
D604	J709536P1	DIO SI CAP MV 2111	1
D605	J707389P1	DIO SI SIG BAV 99	1
D606	J708681P1	DIO SI SIG BAW 56	1
D607	J707390P1	DIO SI SIG BAV 74	1
D608	J707390P1	DIO SI SIG BAV 74	1
D610	J708681P1	DIO SI SIG BAW 56	1
D701	A700073P1	DIO SI CAP BB 409	1
D702	J707390P1	DIO SI SIG BAV 74	1
L100	K805653G9	COIL ASM 9 1/2T	1
L101	A700024P7	COIL RF FIX 0.33UH 10%	1
L102	A700024P3	COIL RF FIX 0.15UH 10%	1
L103	A700024P12	COIL RF FIX 0.82UH 10%	1
L104	K805653G2	COIL ASM 2 1/2T	1
L105	K805653G5	COIL ASM 5 1/2T G1/G2/G3	1
L105	K805653G8	COIL ASM 8 1/2T G4/G5/G6	1
L106	J707339G1	COIL FIX ASM	1
L107	K805653G4	COIL ASM 4 1/2T	1
L108	A700024P3	COIL RF FIX 0.15UH 10%	1
L109	J707256P2	COIL FIX	1
L110	J709287P1	CORE TOR FERR	1
L111	J707256P1	COIL FIX G1/G2/G3	1
L111	J707256G1	COIL ASM 1 1/2T G4/G5/G6	1

Pos	Code No	Description	Qt
L113	A700024P3	COIL RF FIX 0.15UH 10%	
L114	J709287P1	CORE TOR FERR	1
L115	J707256P2	COIL FIX	1
L116	J709287P1	CORE TOR FERR	1
L117	J709603P2	COIL G1/G2/G3	1
L117	J709603P6	COIL ASM 1 1/2T G4/G5/G6	1
L118	J709603P1	COIL G1/G2/G3	1
L118	J709603P6	COIL FIX G4/G5/G6	1
L121	A700024P18	COIL RF FIX 2.7UH 10%	1
L122	A700024P25	COIL RF FIX 10UH 10%	1
L123	A700024P25	COIL RF FIX 10UH 10%	1
L124	K805653G7	COIL ASM 7 1/2 T	1
L125	K805653G7	COIL ASM 7 1/2 T	1
L126	K805653G8	COIL ASM 8 1/2T	1
L127	A700024P25	COIL RF FIX 10UH 10%	1
L128	A700024P25	COIL RF FIX 10UH 10%	1
L301	J709099P8	COIL RF VAR 7-1/2T	1
L302	J709099P15	COIL RF VAR 7-1/2T TAP	1
L303	J707486P11	COIL RF FIX 2.2UH 10%	1
L304	J709099P8	COIL RF VAR 7-1/2T	1
L305	J707486P2	COIL RF FIX 3.3UH 10%	1
L306	J709099P8	COIL RF VAR 7-1/2T	1
L308	J709099P8	COIL RF VAR 7-1/2T	1
L310	J709099P9	COIL RF VAR 7-1/2T TAP	1
L312	J708428P1	COIL RF VAR 45 MHZ	1
L313	J709099P12	COIL RF VAR 5-1/2T TAP	1
L314	J709099P14	COIL RF VAR 5-1/2T TAP	1
L401	J707486P3	COIL RF FIX 6.8UH 10%	1
L403	K805570G6	COIL AS M	1
L405	J708428P1	COIL RF VAR 45 MHZ	1
L406	K805570G5	COIL ASM	1
L407	A700024P25	COIL RF FIX 10UH 10%	1
L408	J708428P1	COIL RF VAR 45 MHZ	1
L409	J707431P1	COIL RF VAR 455KHZ 25%	1
L410	J707431P1	COIL RF VAR 455KHZ 25%	1
L501	A700024P21	COIL RF FIX 4.7UH 10%	1
L502	A700024P21	COIL RF FIX 4.7UH 10%	1

Pos	Code No	Description	Qt
L504	A700024P21	COIL RF FIX 4.7UH 10%	1
L505	L855671P2	COIL RADIO FREQUENCY	1
L506	A700024P21	COIL RF FIX 4.7UH 10%	1
L508	A700024P5	COIL RF FIX 0.22UH 10%	1
L601	A700024P21	COIL RF FIX 4.7UH 10%	1
L602	A700024P21	COIL RF FIX 4.7UH 10%	1
L604	A700024P21	COIL RF FIX 4.7UH 10%	1
L605	L855671P2	COIL RA DIO FREQUENCY	1
L606	A700024P21	COIL RF FIX 4.7UH 10%	1
L607	A700024P4	COIL RF FIX 0.18UH 10%	1
L608	A700024P5	COIL RF FIX 0.22UH 10%	1
L701	K805570G7	COIL ASM	1
L702	A700024P43	COIL RF FIX 330UH 10%	1
L703	A700024P27	COIL RF FIX 15UH 10%	1
P102	J707064P112	CONN PWB FEM 12-CKT	1
P105	A701883P4	CONN PWB FEM RECP	1
Q100	J707388P1	TSTR NPN SI BFR 53	1
Q101	A701940P1	TSTR NPN SI RF-PWR 0.4W	1
Q102	J709517P1	TSTR NPN SI RF-PWR 3W	1
Q103	J709162P1	TSTR NPN SI RF-PWR 27W G1/G2/G3	1
Q103	J709163P1	TSTR NPN SI RF-PWR 10W G4/G5/G6	1
Q106	J707432P1	TSTR PNP SI BCX 18	1
Q107	J707386P1	TSTR NPN SI BCW 32	1
Q108	J708406P1	TSTR NPN SI BD 233	1
Q109	J707386P1	TSTR NPN SI BCW 32	1
Q201	J707435P1	TSTR PNP SI BC 369	1
Q202	J707386P1	TSTR NPN SI BCW 32	1
Q203	J707432P1	TSTR PNP SI BCX 18	1
Q204	J707386P1	TSTR NPN SI BCW 32	1
Q301	J706011P2	TSTR NPN SI BFR 91A	1
Q302	J707817P1	TSTR JFET SI J 309	1
Q401	J707817P1	TSTR JFET SI J 309	1
Q402	J707817P1	TSTR JFET SI J 309	1
Q403	J707419P1	TSTR JFET SI BF511	1
Q404	J708418P1	TSTR NPN SI BFS 20	1
Q405	J708418P1	TSTR NPN SI BFS 20	1
R121	J707385P333	RES MFLM 1/8W 33K 5%	1

DATE: 5/16/1988

Pos	Code No	Description	Qt
Q407	J707386P1	TSTR NPN SI BCW 32	1
Q408	J707387P1	TSTR PNP SI BCW 30	1
Q501	J707817P1	TSTR JFET SI J 309	1
Q502	J708318P1	TSTR PNP SI BFT 92	1
Q601	J707817P1	TSTR JFET SI J 309	1
Q603	J708318P1	TSTR PNP SI BFT 92	1
Q604	J707433P1	TSTR MFET SI BF 989	1
Q605	J707386P1	TSTR NPN SI BCW 32	1
Q612	J707386P1	TSTR NPN SI BCW 32	1
Q613	J707386P1	TSTR NPN SI BCW 32	1
Q701	J707419P1	TSTR JFET SI BF511	1
Q702	J707387P1	TSTR PNP SI BCW 30	1
R000	J707385P332	RES MFLM 1/8W 3K3 5% G4/G5/G6	1
R100	J707385P101	RES MFLM 1/8W 100R 5%	1
R101	J707385P470	RES MFLM 1/8W 47R 5%	1
R102	J707385P471	RES MFLM 1/8W 470R 5%	1
R103	J707385P390	RES MFLM 1/8W 39R 5%	1
R104	J707385P331	RES MFLM 1/8W 330R 5%	1
R105	J707385P122	RES MFLM 1/8W 1K2 5%	1
R106	J707385P100	RES MFLM 1/8W 10R 5%	1
R107	J707385P100	RES MFLM 1/8W 10R 5%	1
R108	J707385P560	RES MFLM 1/8W 56R 5%	1
R109	J707385P100	RES MFLM 1/8W 10R 5%	1
R110	J707385P100	RES MFLM 1/8W 10R 5% G1/G2/G3	1
R110	J707385P910	RES MFLM 1/8W 1R0 20% G4/G5/G6	1
R111	J707385P220	RES MFLM 1/8W 22R 5%	1
R112	J707385P947	RES MFLM 1/8W 4R7 20%	1
R113	J707385P100	RES MFLM 1/8W 10R 5%	1
R114	J707385P910	RES MFLM 1/8W 1R0 20% G1/G2/G3	1
R114	J707385P918	RES MFLM 1/8W 1R8 20% G4/G5/G6	1
R115	J707385P910	RES MFLM 1/8W 1R0 20% G1/G2/G3	1
R115	J707385P918	RES MFLM 1/8W 1R8 20% G4/G5/G6	1
R116	J707385P121	RES MFLM 1/8W 120R 5%	1
R117	J707385P220	RES MFLM 1/8W 22R 5%	1
R118	J707385P473	RES MFLM 1/8W 47K 5%	1
R119	J707385P820	RES MFLM 1/8W 82R 5%	1
R120	J707385P820	RES MFLM 1/8W 82R 5%	1

Pos	Code No	Description	Qt
R121	J707385P333	RES MFILM 1/8W 33K 5%	1
R122	J707385P221	RES MFLM 1/8W 220R 5%	1
R123	J707385P221	RES MFLM 1/8W 220R 5%	1
R124	J707385P101	RES MFLM 1/8W 100R 5% G1/G2/G3	1
R124	J707385P221	RES MFLM 1/8W 220R 5% G4/G5/G6	1
R125	J707385P330	RES MFLM 1/8W 33R 5%	1
R126	J707385P330	RES MFLM 1/8W 33R 5%	1
R127	J707385P330	RES MFLM 1/8W 33R 5%	1
R128	J707385P100	RES MFLM 1/8W 10R 5%	1
R129	J707385P121	RES MFLM 1/8W 120R 5% G1/G2/G3	1
R129	J707385P560	RES MFLM 1/8W 56R 5% G4/G5/G6	1
R130	J707385P121	RES MFLM 1/8W 120R 5% G1/G2/G3	1
R130	J707385P560	RES MFLM 1/8W 56R 5% G4/G5/G6	1
R131	J707385P392	RES MFLM 1/8W 3K9 5%	1
R132	J708538P9	RES VAR CERM 200K 20%	1
R133	J708538P4	RES VAR CERM 5K0 20%	1
R134	J707385P100	RES MFLM 1/8W 10R 5%	1
R135	J706147P2	RES THERM PTC 80R 25%	1
R136	J707385P682	RES MFLM 1/8W 6K8 5%	1
R137	J707385P223	RES MFLM 1/8W 22K 5%	1
R138	J707385P472	RES MFLM 1/8W 4K7 5%	1
R139	J707385P472	RES MFLM 1/8W 4K7 5%	1
R140	J707385P333	RES MFLM 1/8W 33K 5%	1
R141	J707385P333	RES MFLM 1/8W 33K 5%	1
R142	J707385P104	RES MFLM 1/8W 100K 5%	1
R143	J707385P222	RES MFLM 1/8W 2K2 5%	1
R144	J707385P222	RES MFLM 1/8W 2K2 5%	1
R145	J707385P223	RES MFLM 1/8W 22K 5%	1
R146	J707385P104	RES MFLM 1/8W 100K 5%	1
R147	J707385P104	RES MFLM 1/8W 100K 5%	1
R148	J707385P123	RES MFLM 1/8W 12K 5%	1
R149	J707385P472	RES MFLM 1/8W 4K7 5%	1
R150	J707385P102	RES MFLM 1/8W 1K0 5%	1
R151	J707385P683	RES MFLM 1/8W 68K 5%	1
R152	J707385P104	RES MFLM 1/8W 100K 5%	1
R153	J707385P472	RES MFLM 1/8W 4K7 5%	1
R154	J707385P274	RES MFLM 1/8W 270K 5%	1

Pos	Code No	Description	Qt
R155	J707385P682	RES MFLM 1/8W 6K8 5%	1
R156	J707385P102	RES MFLM 1/8W 1KO 5%	1
R157	J707385P100	RES MFLM 1/8W 10R 5%	1
R158	J707385P102	RES MFLM 1/8W 1KO 5%	1
R159	J707385P472	RES MFLM 1/8W 4K7 5%	1
R160	J707385P104	RES MFLM 1/8W 100K 5%	1
R161	J709725P1	RES THERM PTC 1KO	1
R162	J707385P220	RES MFLM 1/8W 22R 5%	1
R201	J707385P561	RES MFLM 1/8W 560R 5%	1
R202	J707385P271	RES MFLM 1/8W 270R 5%	1
R203	J707385P153	RES MFLM 1/8W 15K 5%	1
R204	J707385P153	RES MFLM 1/8W 15K 5%	1
R205	J707385P472	RES MFLM 1/8W 4K7 5%	1
R206	J707385P272	RES MFLM 1/8W 2K7 5%	1
R207	J707385P563	RES MFLM 1/8W 56K 5%	1
R208	J707385P563	RES MFLM 1/8W 56K 5%	1
R209	J707385P271	RES MFLM 1/8W 270R 5%	1
R210	J707385P331	RES MFLM 1/8W 330R 5%	1
R301	J707385P331	RES MFLM 1/8W 330R 5%	1
R302	J707385P392	RES MFLM 1/8W 3K9 5%	1
R303	J707385P104	RES MFLM 1/8W 100K 5%	1
R304	J707385P104	RES MFLM 1/8W 100K 5%	1
R306	J707385P272	RES MFLM 1/8W 2K7 5%	1
R307	J707385P681	RES MFLM 1/8W 680R 5%	1
R308	J707385P470	RES MFLM 1/8W 47R 5%	1
R309	J707385P270	RES MFLM 1/8W 27R 5%	1
R310	J707385P104	RES MFLM 1/8W 100K 5%	1
R311	J707385P101	RES MFLM 1/8W 100R 5%	1
R312	J707385P104	RES MFLM 1/8W 100K 5%	1
R313	J707385P123	RES MFLM 1/8W 12K 5%	1
R314	J707385P104	RES MFLM 1/8W 100K 5%	1
R315	J707385P822	RES MFLM 1/8W 8K2 5%	1
R316	J707385P104	RES MFLM 1/8W 100K 5%	1
R317	J707385P471	RES MFLM 1/8W 470R 5%	1
R318	J707385P100	RES MFLM 1/8W 10R 5%	1
R319	J707385P101	RES MFLM 1/8W 100R 5%	1
R320	J707385P222	RES MFLM 1/8W 2K2 5%	1

Pos	Code No	Description	Qt
R321	J707385P270	RES MFLM 1/8W 27R 5%	1
R322	J707385P471	RES MFLM 1/8W 470R 5%	1
R323	J707385P104	RES MFLM 1/8W 100K 5%	1
R324	J707385P104	RES MFLM 1/8W 100K 5%	1
R325	J707385P100	RES MFLM 1/8W 10R 5%	1
R327	J707385P123	RES MFLM 1/8W 12K 5%	1
R328	J707385P332	RES MFLM 1/8W 3K3 5%	1
R329	J707385P102	RES MFLM 1/8W 1KO 5%	1
R401	J707385P390	RES MFLM 1/8W 39R 5%	1
R402	J707385P100	RES MFLM 1/8W 10R 5%	1
R403	J707385P222	RES MFLM 1/8W 2K2 5%	1
R404	J707385P472	RES MFLM 1/8W 4K7 5%	1
R405	J707385P100	RES MFLM 1/8W 10R 5%	1
R406	J707385P820	RES MFLM 1/8W 82R 5%	1
R407	J707385P470	RES MFLM 1/8W 47R 5%	1
R408	J707385P470	RES MFLM 1/8W 47R 5%	1
R409	J707385P332	RES MFLM 1/8W 3K3 5%	1
R410	J707385P471	RES MFLM 1/8W 470R 5%	1
R411	J707385P123	RES MFLM 1/8W 12K 5%	1
R412	J707385P472	RES MFLM 1/8W 4K7 5%	1
R413	J707385P821	RES MFLM 1/8W 820R 5%	1
R414	J707385P332	RES MFLM 1/8W 3K3 5%	1
R415	J707385P222	RES MFLM 1/8W 2K2 5%	1
R416	J707385P562	RES MFLM 1/8W 5K6 5%	1
R417	J707385P103	RES MFLM 1/8W 10K 5%	1
R418	J707385P153	RES MFLM 1/8W 15K 5%	1
R419	J707385P182	RES MFLM 1/8W 1K8 5%	1
R420	J707385P182	RES MFLM 1/8W 1K8 5%	1
R421	J707385P182	RES MFLM 1/8W 1K8 5%	1
R422	J707385P473	RES MFLM 1/8W 47K 5%	1
R423	J707385P153	RES MFLM 1/8W 15K 5%	1
R424	J708538P5	RES VAR CERM 10K 20%	1
R425	J707385P272	RES MFLM 1/8W 2K7 5%	1
R426	J707385P563	RES MFLM 1/8W 56K 5%	1
R427	J707385P273	RES MFLM 1/8W 27K 5%	1
R428	J707385P683	RES MFLM 1/8W 68K 5%	1
R429	J707385P104	RES MFLM 1/8W 100K 5%	1

DATE: 5/16/1988

Pos	Code No	Description	Qt
R430	J707385P334	RES MFLM 1/8W 330K 5%	1
R431	J707385P473	RES MFLM 1/8W 47K 5%	1
R432	J707385P473	RES MFLM 1/8W 47K 5%	1
R433	J707385P271	RES MFLM 1/8W 270R 5%	1
R434	J707385P102	RES MFLM 1/8W 1K0 5%	1
R435	J706147P3	RES THERM PTC 250R 25%	1
R436	J707385P392	RES MFLM 1/8W 3K9 5%	1
R437	J707406P7	RES THERM NTC 220R 10%	1
R438	J707385P222	RES MFLM 1/8W 2K2 5%	1
R439	J707385P392	RES MFLM 1/8W 3K9 5%	1
R440	J707385P392	RES MFLM 1/8W 3K9 5%	1
R441	J707385P101	RES MFLM 1/8W 100R 5%	1
R442	J708538P6	RES VAR CERM 20K 20%	1
R444	J707385P473	RES MFLM 1/8W 47K 5%	1
R445	J707385P273	RES MFLM 1/8W 27K 5%	1
R446	J707385P224	RES MFLM 1/8W 220K 5%	1
R447	J707385P392	RES MFLM 1/8W 3K9 5%	1
R448	J707385P101	RES MFLM 1/8W 100R 5%	1
R449	J707385P470	RES MFLM 1/8W 47R 5%	1
R450	J707385P103	RES MFLM 1/8W 10K 5%	1
R452	J707385P332	RES MFLM 1/8W 3K3 5%	1
R501	J707385P821	RES MFLM 1/8W 820R 5%	1
R502	J707385P821	RES MFLM 1/8W 820R 5%	1
R504	J707385P104	RES MFLM 1/8W 100K 5%	1
R505	J707385P104	RES MFLM 1/8W 100K 5%	1
R508	J707385P103	RES MFLM 1/8W 10K 5%	1
R509	J707385P151	RES MFLM 1/8W 150R 5%	1
R510	J707385P103	RES MFLM 1/8W 10K 5%	1
R512	J707385P561	RES MFLM 1/8W 560R 5%	1
R513	J707385P272	RES MFLM 1/8W 2K7 5%	1
R514	J707385P682	RES MFLM 1/8W 6K8 5%	1
R515	J707385P221	RES MFLM 1/8W 220R 5%	1
R516	J707385P221	RES MFLM 1/8W 220R 5%	1
R517	J707385P101	RES MFLM 1/8W 100R 5%	1
R518	J707385P100	RES MFLM 1/8W 10R 5%	1
R529	J707385P392	RES MFLM 1/8W 3K9 5%	1
R602	J707385P122	RES MFLM 1/8W 1K2 5%	1

Pos	Code No	Description	Qt
R603	J707385P122	RES MFLM 1/8W 1K2 5%	1
R605	J707385P104	RES MFLM 1/8W 100K 5%	1
R606	J707385P104	RES MFLM 1/8W 100K 5%	1
R607	J707385P561	RES MFLM 1/8W 560R 5%	1
R608	J707385P682	RES MFLM 1/8W 6K8 5%	1
R609	J707385P332	RES MFLM 1/8W 3K3 5%	1
R610	J707385P331	RES MFLM 1/8W 330R 5%	1
R611	J707385P151	RES MFLM 1/8W 150R 5%	1
R612	J707385P102	RES MFLM 1/8W 1K0 5%	1
R613	J707385P101	RES MFLM 1/8W 100R 5%	1
R614	J707385P272	RES MFLM 1/8W 2K7 5%	1
R615	J707385P682	RES MFLM 1/8W 6K8 5%	1
R616	J707385P181	RES MFLM 1/8W 180R 5%	1
R617	J707385P563	RES MFLM 1/8W 56K 5%	1
R618	J707385P683	RES MFLM 1/8W 68K 5%	1
R619	J707385P104	RES MFLM 1/8W 100K 5%	1
R620	J707385P102	RES MFLM 1/8W 1K0 5%	1
R621	J707385P471	RES MFLM 1/8W 470R 5%	1
R622	J707385P151	RES MFLM 1/8W 150R 5%	1
R623	J707385P224	RES MFLM 1/8W 220K 5%	1
R624	J707385P223	RES MFLM 1/8W 22K 5%	1
R625	J707385P101	RES MFLM 1/8W 100R 5%	1
R626	J707385P100	RES MFLM 1/8W 10R 5%	1
R627	J707385P103	RES MFLM 1/8W 10K 5%	1
R628	J707385P224	RES MFLM 1/8W 220K 5%	1
R629	J707385P124	RES MFLM 1/8W 120K 5%	1
R630	J707385P100	RES MFLM 1/8W 10R 5%	1
R631	J707385P684	RES MFLM 1/8W 680K 5%	1
R632	J707385P223	RES MFLM 1/8W 22K 5%	1
R633	J707385P824	RES MFLM 1/8W 820K 5%	1
R634	J707385P123	RES MFLM 1/8W 12K 5%	1
R635	J707385P102	RES MFLM 1/8W 1K0 5%	1
R636	J707385P332	RES MFLM 1/8W 3K3 5%	1
R637	J707385P181	RES MFLM 1/8W 180R 5%	1
R638	J707385P474	RES MFLM 1/8W 470K 5%	1
R639	J707385P333	RES MFLM 1/8W 33K 5%	1
R640	J707385P105	RES MFLM 1/8W 1M0 10%	1

Pos	Code No	Description	Qt
R641	J707385P184	RES MFLM 1/8W 180K 5%	1
R642	J707385P184	RES MFLM 1/8W 180K 5%	1
R643	J707385P105	RES MFLM 1/8W 1M0 10%	1
R644	J707385P473	RES MFLM 1/8W 47K 5%	1
R645	J707385P153	RES MFLM 1/8W 15K 5%	1
R646	J707385P393	RES MFLM 1/8W 39K 5%	1
R647	J707385P333	RES MFLM 1/8W 33K 5%	1
R649	J707385P473	RES MFLM 1/8W 47K 5%	1
R650	J707385P562	RES MFLM 1/8W 5K6 5%	1
R651	J707385P473	RES MFLM 1/8W 47K 5%	1
R652	J707385P223	RES MFLM 1/8W 22K 5%	1
R653	J707385P823	RES MFLM 1/8W 82K 5%	1
R654	J707385P153	RES MFLM 1/8W 15K 5%	1
R655	J707385P183	RES MFLM 1/8W 18K 5%	1
R656	J707385P393	RES MFLM 1/8W 39K 5%	1
R657	J707385P823	RES MFLM 1/8W 82K 5%	1
R658	J707385P154	RES MFLM 1/8W 150K 5%	1
R659	J707385P223	RES MFLM 1/8W 22K 5%	1
R660	J707385P333	RES MFLM 1/8W 33K 5%	1
R661	J707385P473	RES MFLM 1/8W 47K 5%	1
R662	J707385P473	RES MFLM 1/8W 47K 5%	1
R663	J708538P6	RES VAR CERM 20K 20%	1
R664	J707385P473	RES MFLM 1/8W 47K 5%	1
R665	J707385P824	RES MFLM 1/8W 820K 5%	1
R666	J707385P124	RES MFLM 1/8W 120K 5%	1
R667	J707385P124	RES MFLM 1/8W 120K 5%	1
R668	J707385P122	RES MFLM 1/8W 1K2 5%	1
R669	J707385P221	RES MFLM 1/8W 220R 5%	1
R670	J707385P103	RES MFLM 1/8W 10K 5%	1
R671	J707385P562	RES MFLM 1/8W 5K6 5%	1
R672	J707385P822	RES MFLM 1/8W 8K2 5%	1
R673	J707385P822	RES MFLM 1/8W 8K2 5%	1
R674	J707385P101	RES MFLM 1/8W 100R 5%	1
R675	J708538P5	RES VAR CERM 10K 20%	1
R676	J707385P562	RES MFLM 1/8W 5K6 5%	1
R677	J708538P5	RES VAR CERM 10K 20%	1
R678	J707385P470	RES MFLM 1/8W 47R 5%	1

Pos	Code No	Description	Qt
R679	J707385P821	RES MFLM 1/8W 820R 5%	1
R680	J708538P7	RES VAR CERM 50K 20%	1
R681	J707385P223	RES MFLM 1/8W 22K 5%	1
R682	J707385P152	RES MFLM 1/8W 1K5 5%	1
R683	J707385P223	RES MFLM 1/8W 22K 5%	1
R684	J707385P183	RES MFLM 1/8W 18K 5%	1
R685	J707385P183	RES MFLM 1/8W 18K 5%	1
R686	J707385P103	RES MFLM 1/8W 10K 5%	1
R687	J707385P103	RES MFLM 1/8W 10K 5%	1
R689	J707385P105	RES MFLM 1/8W 1M0 10%	1
R690	J707385P124	RES MFLM 1/8W 120K 5%	1
R691	J707385P273	RES MFLM 1/8W 27K 5%	1
R692	J707385P223	RES MFLM 1/8W 22K 5%	1
R693	J707385P105	RES MFLM 1/8W 1M0 10%	1
R694	J707385P223	RES MFLM 1/8W 22K 5%	1
R695	J707385P105	RES MFLM 1/8W 1M0 10%	1
R696	J707385P223	RES MFLM 1/8W 22K 5%	1
R697	J707385P105	RES MFLM 1/8W 1M0 10%	1
R698	J707385P103	RES MFLM 1/8W 10K 5%	1
R699	J707385P392	RES MFLM 1/8W 3K9 5%	1
R702	A701250P413	RES MFILM 133K 1% 1/4W	1
R703	A701250P213	RES MFILM 1K33 1% 1/4W	1
R704	A701250P326	RES MFILM 18K2 1% 1/4W	1
R707	J707385P104	RES MFLM 1/8W 100K 5%	1
R708	J707385P105	RES MFLM 1/8W 1M0 10%	1
R709	J707385P181	RES MFLM 1/8W 180R 5%	1
R710	J707385P101	RES MFLM 1/8W 100R 5%	1
R711	J707385P223	RES MFLM 1/8W 22K 5%	1
R712	J707385P154	RES MFLM 1/8W 150K 5%	1
R713	J707385P821	RES MFLM 1/8W 820R 5%	1
R714	J707385P104	RES MFLM 1/8W 100K 5%	1
R715	J707385P563	RES MFLM 1/8W 56K 5%	1
U100	J708165P2	IC LIN OP-AMP 324	1
U201	J708333P1	IC LIN VR FIX 4785	1
U401	J707449P1	IC LIN IF-AMP 3357	1
U402	M905766G1	INT CKT SQ 4002 G1/G2/G5/G4	1
U402	M905766G2	INT CKT SQ 4003 G6/G3	1

DATE: 5/16/1988

Pos	Code No	Description	Qt
U601	J707859P1	IC LIN OP-AMP 204	1
U602	J707859P1	IC LIN OP-AMP 204	1
U604	J707859P1	IC LIN OP-AMP 204	1
U606	J707243P1	IC DIG REG 4094	1
U607	J707374P1	IC PLL PRESC 8793	1
U608	B800902P1	IC PLL SYN CUSTOM DES	1
U609	J707859P1	IC LIN OP-AMP 204	1
U610	J708503P2	IC LIN CMPAR LM 339	1
U615	J708621P2	CPLR OPTO PC 827	1
U616	J708503P2	IC LIN CMPAR LM 339	1
W003	J707256P1	COIL FIX	1
W004	J707256P1	COIL FIX	1
W005	J708717P1	STRAP	1
W006	J708716P1	STRAP	1
Y401	J707309P1	CRYSTAL UNIT 20.9450MHZ	1
Y701	J707567P19	CRYSTAL UNIT 7.4000MHZ	1
Z401	J707310P1	FLTR CRY 21.4 +/-7.50KHZ G1/G4	1
Z401	J707310P2	FLTR CRY 21.4 +/-7.50KHZ G2/G5	1
Z401	J707310P3	FLTR CRY 21.4 +/-3.75KHZ G3/G6	1
Z402	J707446P1	FLTR CER 455K +/-10KHZ G1/G4	1
Z402	J707446P3	FLTR CER 455K +/-7.5KHZ G2/G5	1
Z402	J707446P4	FLTR CER 455K +/-4.5KHZ G3/G6	1
Z403	J707446P1	FLTR CER 455K +/-10KHZ G1/G4	1
Z403	J707446P3	FLTR CER 455K +/-7.5KHZ G2/G5	1
Z403	J707446P4	FLTR CER 455K +/-4.5KHZ G3/G6	1
	M905893P1R2	BD PW	1
		NON ELECTRONICAL PARTS	
	J708561P3	COIL FIX	1
	K805776P1	CASTING HEAT SINK	1
	K805569G2	SHIELD METALLIZED	1
	J706281P7	CORE SCREW FERR U 25	8
	J706804P2	WASH INS CRYS FOR HC-18/U	4

Pos	Code No	Description	Qt

DATE: 2/29/1988

Pos	Code No	Description	Qt
C100	J707809P13	CAP CER NPO 10P 5%	1
C101	J707438P4	CAP CER CL2 680P 10%	1
C102	J707438P7	CAP CER CL2 2N2 10%	1
C103	J707436P65	CAP CER NPO 150P 5%	1
C104	J707809P15	CAP CER NPO 15P 5%	1
C105	J707809P17	CAP CER NPO 22P 5%	1
C106	J707809P15	CAP CER NPO 15P 5%	1
C107	J707438P7	CAP CER CL2 2N2 10%	1
C108	J707438P7	CAP CER CL2 2N2 10%	1
C109	J707809P25	CAP CER NPO 100P 5%	1
C110	J707809P23	CAP CER NPO 68P 5% G1/G2/G3	1
C110	J707809P17	CAP CER NPO 22P 5% G4/G5/G6	1
C111	J707438P7	CAP CER CL2 2N2 10%	1
C112	J707438P14	CAP CER CL2 10N 10%	1
C113	J707438P7	CAP CER CL2 2N2 10%	1
C114	J707438P7	CAP CER CL2 2N2 10%	1
C115	J707809P27	CAP CER NPO 150P 5% G1/G2/G3	1
C115	J707809P23	CAP CER NPO 68P 5% G4/G5/G6	1
C116	J707809P27	CAP CER NPO 150P 5% G1/G2/G3	1
C116	J707809P24	CAP CER NPO 82P 5% G4/G5/G6	1
C120	J707353P6	CAP ELECT 4U7 25V	1
C121	J707438P14	CAP CER CL2 10N 10%	1
C122	J707438P7	CAP CER CL2 2N2 10%	1
C123	J707438P14	CAP CER CL2 10N 10%	1
C124	J707438P7	CAP CER CL2 2N2 10%	1
C125	A700006P40	CAP MICA 170P 5% G1/G2/G3	1
C125	A700006P38	CAP MICA 150P 5% G4/G5/G6	1
C126	J709524P59	CAP CER RF 270P 5% G1/G2/G3	1
C126	J709524P49	CAP CER RF 100P 5% G4/G5/G6	1
C127	J709524P51	CAP CER RF 120P 5% G1/G2/G3	1
C127	J709524P45	CAP CER RF 68P 5% G4/G5/G6	1
C128	A700006P35	CAP MICA 110P 5% G1/G2/G3	1
C128	A700006P26	CAP MICA 47P 5% G4/G5/G6	1
C130	J707809P14	CAP CER NPO 12P 5%	1
C131	J707809P9	CAP CER NPO 4P7 .25P	1
C132	J707809P12	CAP CER NPO 8P2 .25P	1
C133	J707809P12	CAP CER NPO 8P2 .25P	1

Pos	Code No	Description	Qt
C134	J707353P6	CAP ELECT 4U7 25V	1
C136	J707438P20	CAP CER CL2 33N 10%	1
C137	J707438P7	CAP CER CL2 2N2 10%	1
C138	J707438P7	CAP CER CL2 2N2 10%	1
C139	J707438P7	CAP CER CL2 2N2 10%	1
C140	J707438P7	CAP CER CL2 2N2 10%	1
C141	J707438P7	CAP CER CL2 2N2 10%	1
C142	A700006P14	CAP MICA 18P 5%	1
C143	A700006P26	CAP MICA 47P 5%	1
C144	A700006P26	CAP MICA 47P 5%	1
C145	A700006P18	CAP MICA 24P 5%	1
C146	J707438P7	CAP CER CL2 2N2 10%	1
C147	J707438P7	CAP CER CL2 2N2 10%	1
C148	J707438P7	CAP CER CL2 2N2 10%	1
C149	J707438P7	CAP CER CL2 2N2 10%	1
C150	J707809P10	CAP CER NPO 5P6 .25P G1/G2/G3	1
C150	J707809P12	CAP CER NPO 5P6 .25P G4/G5/G6	1
C151	J707809P10	CAP CER NPO 5P6 .25P G1/G2/G3	1
C151	J707809P12	CAP CER NPO 5P6 .25P G4/G5/G6	1
C152	J707438P7	CAP CER CL2 2N2 10%	1
C153	J707438P7	CAP CER CL2 2N2 10%	1
C154	J707438P7	CAP CER CL2 2N2 10%	1
C155	J707438P7	CAP CER CL2 2N2 10%	1
C156	J707353P3	CAP ELECT 0U47 50V	1
C157	J707438P7	CAP CER CL2 2N2 10%	1
C158	J707438P7	CAP CER CL2 2N2 10%	1
C159	J707438P14	CAP CER CL2 10N 10%	1
C160	J707436P77	CAP CER NPO 470P 5%	1
C161	J707438P7	CAP CER CL2 2N2 10%	1
C162	J707438P14	CAP CER CL2 10N 10%	1
C163	J707438P20	CAP CER CL2 33N 10%	1
C164	J707438P7	CAP CER CL2 2N2 10%	1
C165	J707809P16	CAP CER NPO 18P 5% G1/G2/G3	1
C165	J707809P17	CAP CER NPO 22P 5% G4/G5/G6	1
C166	J707438P5	CAP CER CL2 1N 10%	1
C167	J707412P13	CAP PYES 470N 10%	1
C168	J707438P7	CAP CER CL2 2N2 10%	1

DATE: 2/29/1988

Pos	Code No	Description	Qt
C169	J707809P1	CAP CER NPO 1PO .25P	1
C170	J707438P14	CAP CER CL2 10N 10%	1
C171	J707438P14	CAP CER CL2 10N 10%	1
C172	J707438P14	CAP CER CL2 10N 10%	1
C201	J707438P26	CAP CER CL2 100N 10%	1
C202	J707444P8	CAP TA SOL 22U 16V	1
C203	J706005P12	CAP ELECT 47U 40V	1
C204	J707438P7	CAP CER CL2 2N2 10%	1
C205	J707412P9	CAP PYES 100N 10%	1
C206	J707444P4	CAP TA SOL 1U 35V	1
C301	J707436P69	CAP CER NPO 220P 5%	1
C302	J707438P5	CAP CER CL2 1N 10%	1
C304	J707436P10	CAP CER NPO 5P6 .25P	1
C305	J707436P33	CAP CER NPO 27P 5%	1
C306	J707483P4	CAP PHEN 0P56 5%	1
C307	J707438P5	CAP CER CL2 1N 10%	1
C309	J707436P33	CAP CER NPO 27P 5%	1
C310	J707438P5	CAP CER CL2 1N 10%	1
C311	J707436P10	CAP CER NPO 5P6 .25P	1
C312	J707436P87	CAP CER NPO 1N2 5%	1
C315	J707436P10	CAP CER NPO 5P6 .25P	1
C317	J707444P2	CAP TA SOL 0U22 35V	1
C318	J707438P5	CAP CER CL2 1N 10%	1
C319	J707436P33	CAP CER NPO 27P 5%	1
C320	J707438P5	CAP CER CL2 1N 10%	1
C322	J707483P7	CAP PHEN 1P00 5%	1
C323	J707483P6	CAP PHEN 0P82 5%	1
C324	J707436P7	CAP CER NPO 3P3 .25P	1
C325	J707438P5	CAP CER CL2 1N 10%	1
C326	J707436P33	CAP CER NPO 27P 5%	1
C328	J707436P33	CAP CER NPO 27P 5%	1
C331	J707483P6	CAP PHEN 0P82 5%	1
C332	J707436P33	CAP CER NPO 27P 5%	1
C333	J707436P7	CAP CER NPO 3P3 .25P	1
C334	J707436P8	CAP CER NPO 3P9 .25P	1
C335	J707438P5	CAP CER CL2 1N 10%	1
C338	J707436P37	CAP CER NPO 33P 5%	1

Pos	Code No	Description	Qt
C339	J707438P5	CAP CER CL2 1N 10%	1
C340	J707438P8	CAP CER CL2 3N3 10%	1
C345	J707438P5	CAP CER CL2 1N 10%	1
C347	J707438P5	CAP CER CL2 1N 10%	1
C348	J707438P5	CAP CER CL2 1N 10%	1
C350	J707436P10	CAP CER NPO 5P6 .25P	1
C351	J707436P25	CAP CER NPO 18P 5%	1
C353	J707483P8	CAP PHEN 1P20 5%	1
C354	J707436P25	CAP CER NPO 18P 5%	1
C355	J707436P9	CAP CER NPO 4P7 .25P	1
C356	J707438P5	CAP CER CL2 1N 10%	1
C357	J707436P1	CAP CER NPO 1PO .25P	1
C358	J707436P1	CAP CER NPO 1PO .25P	1
C359	J707438P5	CAP CER CL2 1N 10%	1
C401	J707438P8	CAP CER CL2 3N3 10%	1
C402	J707438P8	CAP CER CL2 3N3 10%	1
C403	J707438P8	CAP CER CL2 3N3 10%	1
C404	J707436P37	CAP CER NPO 33P 5%	1
C405	J707438P26	CAP CER CL2 100N 10%	1
C406	J707436P10	CAP CER NPO 5P6 .25P	1
C407	J707436P33	CAP CER NPO 27P 5%	1
C408	J707438P5	CAP CER CL2 1N 10%	1
C409	J707438P8	CAP CER CL2 3N3 10%	1
C410	J707444P8	CAP TA SOL 22U 16V	1
C411	J707438P26	CAP CER CL2 100N 10%	1
C412	J707438P26	CAP CER CL2 100N 10%	1
C413	J707436P37	CAP CER NPO 33P 5%	1
C414	J707438P8	CAP CER CL2 3N3 10%	1
C415	J707436P69	CAP CER NPO 220P 5%	1
C416	J707436P61	CAP CER NPO 100P 5%	1
C417	J707436P33	CAP CER NPO 27P 5%	1
C418	J707438P14	CAP CER CL2 10N 10%	1
C419	J707438P26	CAP CER CL2 100N 10%	1
C420	J707438P14	CAP CER CL2 10N 10%	1
C421	J707438P26	CAP CER CL2 100N 10%	1
C422	J707438P26	CAP CER CL2 100N 10%	1
C423	J707436P13	CAP CER NPO 10P 5%	1

DATE: 2/29/1988

Pos	Code No	Description	Qt
C424	J707438P8	CAP CER CL2 3N3 10%	1
C425	J707412P13	CAP PYES 470N 10%	1
C426	J707436P93	CAP CER NPO 2N2 5%	1
C427	J707436P73	CAP CER NPO 330P 5%	1
C428	J707436P73	CAP CER NPO 330P 5%	1
C429	J707438P14	CAP CER CL2 10N 10%	1
C430	J707444P8	CAP TA SOL 22U 16V	1
C431	J707444P8	CAP TA SOL 22U 16V	1
C432	J707438P26	CAP CER CL2 100N 10%	1
C433	J707438P26	CAP CER CL2 100N 10%	1
C434	J707438P8	CAP CER CL2 3N3 10%	1
C435	J707436P1	CAP CER NPO 1P0 .25P	1
C436	J707438P26	CAP CER CL2 100N 10%	1
C437	J707436P45	CAP CER NPO 47P 5%	1
C438	J707438P14	CAP CER CL2 10N 10%	1
C501	J707412P11	CAP PYES 220N 10%	1
C502	J707412P11	CAP PYES 220N 10%	1
C504	A700235P16	CAP CER N150 18P 5%	1
C505	A700235P11	CAP CER N150 6P8 .25P	1
C506	A700235P20	CAP CER N150 39P 5%	1
C507	A700235P19	CAP CER N150 33P 5%	1
C508	A700235P25	CAP CER N150 100P 5%	1
C509	J707436P6	CAP CER NPO 2P7 .25P	1
C512	J707436P5	CAP CER NPO 2P2 .25P	1
C513	J707438P2	CAP CER CL2 330P 10%	1
C514	J707438P6	CAP CER CL2 1N5 10%	1
C517	J707444P6	CAP TA SOL 4U7 35V	1
C518	J707436P2	CAP CER NPO 1P2 .25P	1
C519	J707438P6	CAP CER CL2 1N5 10%	1
C520	J707436P69	CAP CER NPO 220P 5%	1
C521	J707436P29	CAP CER NPO 22P 5%	1
C522	J707438P6	CAP CER CL2 1N5 10%	1
C523	J707436P5	CAP CER NPO 2P2 .25P	1
C524	J707438P3	CAP CER CL2 470P 10%	1
C525	J707438P3	CAP CER CL2 470P 10%	1
C527	J707438P3	CAP CER CL2 470P 10%	1
C528	J707438P26	CAP CER CL2 100N 10%	1

Pos	Code No	Description	Qt
C540	J707438P3	CAP CER CL2 470P 10%	1
C541	J707438P3	CAP CER CL2 470P 10%	1
C543	J707438P3	CAP CER CL2 470P 10%	1
C544	J707438P3	CAP CER CL2 470P 10%	1
C545	J707436P61	CAP CER NPO 100P 5%	1
C601	J707412P11	CAP PYES 220N 10%	1
C602	J707412P11	CAP PYES 220N 10%	1
C603	J707438P26	CAP CER CL2 100N 10%	1
C604	A700235P13	CAP CER N150 10P 5%	1
C605	A700235P10	CAP CER N150 5P6 .25P	1
C606	A700235P38	CAP CER N150 16P 5%	1
C607	A700235P11	CAP CER N150 6P8 .25P	1
C608	A700233P9	CAP CER CL2 2N2 20%	1
C610	J707436P61	CAP CER NPO 100P 5%	1
C611	J707436P6	CAP CER NPO 2P7 .25P	1
C612	J707438P6	CAP CER CL2 1N5 10%	1
C613	J707444P6	CAP TA SOL 4U7 35V	1
C614	J707438P6	CAP CER CL2 1N5 10%	1
C615	J707438P10	CAP CER CL2 4N7 10%	1
C616	J707438P4	CAP CER CL2 680P 10%	1
C617	J707436P49	CAP CER NPO 56P 5%	1
C618	J707436P1	CAP CER NPO 1P0 .25P	1
C619	J707438P6	CAP CER CL2 1N5 10%	1
C620	J707436P61	CAP CER NPO 100P 5%	1
C621	J707436P21	CAP CER NPO 15P 5%	1
C622	J707436P5	CAP CER NPO 2P2 .25P	1
C623	J707438P26	CAP CER CL2 100N 10%	1
C624	J707436P61	CAP CER NPO 100P 5%	1
C625	J707438P6	CAP CER CL2 1N5 10%	1
C626	J707438P5	CAP CER CL2 1N 10%	1
C627	J707438P26	CAP CER CL2 100N 10%	1
C628	J707436P3	CAP CER NPO 1P5 .25P	1
C629	J707436P65	CAP CER NPO 150P 5%	1
C630	J707438P26	CAP CER CL2 100N 10%	1
C631	J707438P6	CAP CER CL2 1N5 10%	1
C632	J707444P6	CAP TA SOL 4U7 35V	1
C633	J707444P17	CAP TA SOL 47U 10V	1

DATE: 2/29/1988

Pos	Code No	Description	Qt
C634	J707438P26	CAP CER CL2 100N 10%	1
C635	J707438P1	CAP CER CL2 220P 10%	1
C636	J707444P17	CAP TA SOL 47U 10V	1
C637	J707438P26	CAP CER CL2 100N 10%	1
C638	J707438P5	CAP CER CL2 1N 10%	1
C639	J707438P8	CAP CER CL2 3N3 10%	1
C640	J707412P8	CAP PYES 68N 10%	1
C641	J707412P13	CAP PYES 470N 10%	1
C642	J707412P13	CAP PYES 470N 10%	1
C643	J707438P26	CAP CER CL2 100N 10%	1
C644	J707436P6	CAP CER NPO 2P7 .25P	1
C645	J707436P25	CAP CER NPO 18P 5%	1
C646	J707436P63	CAP CER NPO 120P 5%	1
C647	J707436P13	CAP CER NPO 10P 5%	1
C652	J707438P22	CAP CER CL2 47N 10%	1
C653	J707444P6	CAP TA SOL 4U7 35V	1
C656	J707438P3	CAP CER CL2 470P 10%	1
C657	J707438P3	CAP CER CL2 470P 10%	1
C659	J707438P5	CAP CER CL2 1N 10%	1
C660	J707438P14	CAP CER CL2 10N 10%	1
C666	J707438P3	CAP CER CL2 470P 10%	1
C667	J707438P3	CAP CER CL2 470P 10%	1
C701	J707436P29	CAP CER NPO 22P 5%	1
C702	J708702P22	CAP CER N750 56P 5%	1
C703	J707436P69	CAP CER NPO 220P 5%	1
C705	J707438P5	CAP CER CL2 1N 10%	1
C706	J707438P14	CAP CER CL2 10N 10%	1
C707	J707436P10	CAP CER NPO 5P6 .25P	1
C708	J707438P14	CAP CER CL2 10N 10%	1
C709	J707438P14	CAP CER CL2 10N 10%	1
D100	A700047P3	DIO SI SIG 1N6263	1
D101	J706892P1	DIO SI PIN UM 9401	1
D102	J706892P1	DIO SI PIN UM 9401	1
D103	J707390P1	DIO SI SIG BAV 74	1
D300	J707928P2	DIO SI CAP BB 809	1
D301	J707928P2	DIO SI CAP BB 809	1
D302	J707928P2	DIO SI CAP BB 809	1

Pos	Code No	Description	Qt
D303	J707928P2	DIO SI CAP BB 809	1
D304	J707928P2	DIO SI CAP BB 809	1
D305	J707928P2	DIO SI CAP BB 809	1
D306	J707928P2	DIO SI CAP BB 809	1
D307	J707928P2	DIO SI CAP BB 809	1
D401	A700025P8	DIO SI ZENR 6V8 5% 0.4W	1
D501	J707928P2	DIO SI CAP BB 809	1
D502	J707928P2	DIO SI CAP BB 809	1
D503	J707928P2	DIO SI CAP BB 809	1
D504	J707928P2	DIO SI CAP BB 809	1
D505	J707928P2	DIO SI CAP BB 809	1
D506	J707397P1	DIO SI CAP BBY 40	1
D601	J707928P2	DIO SI CAP BB 809	1
D602	J707928P2	DIO SI CAP BB 809	1
D603	J709536P1	DIO SI CAP MV 2111	1
D604	J709536P1	DIO SI CAP MV 2111	1
D605	J707389P1	DIO SI SIG BAV 99	1
D606	J708681P1	DIO SI SIG BAW 56	1
D607	J707390P1	DIO SI SIG BAV 74	1
D608	J707390P1	DIO SI SIG BAV 74	1
D610	J708681P1	DIO SI SIG BAW 56	1
D701	A700073P1	DIO SI CAP BB 409	1
D702	J707390P1	DIO SI SIG BAV 74	1
L100	K805653G9	COIL ASM 9 1/2T	1
L101	A700024P7	COIL RF FIX 0.33UH 10%	1
L102	A700024P3	COIL RF FIX 0.15UH 10%	1
L103	A700024P12	COIL RF FIX 0.82UH 10%	1
L104	K805653G2	COIL ASM 2 1/2T	1
L105	K805653G5	COIL ASM 5 1/2T G1/G2/G3	1
L105	K805653G8	COIL ASM 8 1/2T G4/G5/G6	1
L106	J707339G1	COIL FIX ASM	1
L107	K805653G4	COIL ASM 4 1/2T	1
L108	A700024P3	COIL RF FIX 0.15UH 10%	1
L109	J707256P2	COIL FIX	1
L110	J709287P1	CORE TOR FERR	1
L111	J707256P1	COIL FIX G1/G2/G3	1
L111	J707256G1	COIL ASM 1 1/2T G4/G5/G6	1

DATE: 2/29/1988

Pos	Code No	Description	Qt
L113	A700024P3	COIL RF FIX 0.15UH 10%	
L114	J709287P1	CORE TOR FERR	1
L115	J707256P2	COIL FIX	1
L116	J709287P1	CORE TOR FERR	1
L117	J709603P2	COIL G1/G2/G3	1
L117	J709603P6	COIL ASM 1 1/2T G4/G5/G6	1
L118	J709603P1	COIL G1/G2/G3	1
L118	J709603P6	COIL FIX G4/G5/G6	1
L121	A700024P18	COIL RF FIX 2.7UH 10%	1
L122	A700024P25	COIL RF FIX 10UH 10%	1
L123	A700024P25	COIL RF FIX 10UH 10%	1
L124	K805653G7	COIL ASM 7 1/2 T	1
L125	K805653G7	COIL ASM 7 1/2 T	1
L126	K805653G8	COIL ASM 8 1/2T	1
L127	A700024P25	COIL RF FIX 10UH 10%	1
L128	A700024P25	COIL RF FIX 10UH 10%	1
L301	J709099P8	COIL RF VAR 7-1/2T	1
L302	J709099P15	COIL RF VAR 7-1/2T TAP	1
L303	J707486P11	COIL RF FIX 2.2UH 10%	1
L304	J709099P8	COIL RF VAR 7-1/2T	1
L305	J707486P2	COIL RF FIX 3.3UH 10%	1
L306	J709099P8	COIL RF VAR 7-1/2T	1
L308	J709099P8	COIL RF VAR 7-1/2T	1
L310	J709099P9	COIL RF VAR 7-1/2T TAP	1
L312	J708428P1	COIL RF VAR 45 MHZ	1
L313	J709099P12	COIL RF VAR 5-1/2T TAP	1
L314	J709099P14	COIL RF VAR 5-1/2T TAP	1
L401	J707486P3	COIL RF FIX 6.8UH 10%	1
L403	K805570G6	COIL AS M	1
L405	J708428P1	COIL RF VAR 45 MHZ	1
L406	K805570G5	COIL ASM	1
L407	A700024P25	COIL RF FIX 10UH 10%	1
L408	J708428P1	COIL RF VAR 45 MHZ	1
L409	J707431P1	COIL RF VAR 455KHZ 25%	1
L410	J707431P1	COIL RF VAR 455KHZ 25%	1
L501	A700024P21	COIL RF FIX 4.7UH 10%	1
L502	A700024P21	COIL RF FIX 4.7UH 10%	1

Pos	Code No	Description	Qt
L504	A700024P21	COIL RF FIX 4.7UH 10%	1
L505	L855671P2	COIL RADIO FREQUENCY	1
L506	A700024P21	COIL RF FIX 4.7UH 10%	1
L508	A700024P5	COIL RF FIX 0.22UH 10%	1
L601	A700024P21	COIL RF FIX 4.7UH 10%	1
L602	A700024P21	COIL RF FIX 4.7UH 10%	1
L604	A700024P21	COIL RF FIX 4.7UH 10%	1
L605	L855671P2	COIL RA DIO FREQUENCY	1
L606	A700024P21	COIL RF FIX 4.7UH 10%	1
L607	A700024P4	COIL RF FIX 0.18UH 10%	1
L608	A700024P5	COIL RF FIX 0.22UH 10%	1
L701	K805570G7	COIL ASM	1
L702	A700024P43	COIL RF FIX 330UH 10%	1
L703	A700024P27	COIL RF FIX 15UH 10%	1
P102	J707064P112	CONN PWB FEM 12-CKT	1
P105	A701883P4	CONN PWB FEM RECP	1
Q100	J707388P1	TSTR NPN SI BFR 53	1
Q101	A701940P1	TSTR NPN SI RF-PWR 0.4W	1
Q102	J709517P1	TSTR NPN SI RF-PWR 3W	1
Q103	J709162P1	TSTR NPN SI RF-PWR 27W G1/G2/G3	1
Q103	J709163P1	TSTR NPN SI RF-PWR 10W G4/G5/G6	1
Q106	J707432P1	TSTR PNP SI BCX 18	1
Q107	J707386P1	TSTR NPN SI BCW 32	1
Q108	J708406P1	TSTR NPN SI BD 233	1
Q109	J707386P1	TSTR NPN SI BCW 32	1
Q201	J707435P1	TSTR PNP SI BC 369	1
Q202	J707386P1	TSTR NPN SI BCW 32	1
Q203	J707432P1	TSTR PNP SI BCX 18	1
Q204	J707386P1	TSTR NPN SI BCW 32	1
Q301	J706011P2	TSTR NPN SI BFR 91A	1
Q302	J707817P1	TSTR JFET SI J 309	1
Q401	J707817P1	TSTR JFET SI J 309	1
Q402	J707817P1	TSTR JFET SI J 309	1
Q403	J707419P1	TSTR JFET SI BF511	1
Q404	J708418P1	TSTR NPN SI BFS 20	1
Q405	J708418P1	TSTR NPN SI BFS 20	1
R121	J707385P333	RES MFLM 1/8W 33K 5%	1

DATE: 2/29/1988

Pos	Code No	Description	Qt
Q407	J707386P1	TSTR NPN SI BCW 32	1
Q408	J707387P1	TSTR PNP SI BCW 30	1
Q501	J707817P1	TSTR JFET SI J 309	1
Q502	J708318P1	TSTR PNP SI BFT 92	1
Q601	J707817P1	TSTR JFET SI J 309	1
Q603	J708318P1	TSTR PNP SI BFT 92	1
Q604	J707433P1	TSTR MFET SI BF 989	1
Q605	J707386P1	TSTR NPN SI BCW 32	1
Q612	J707386P1	TSTR NPN SI BCW 32	1
Q613	J707386P1	TSTR NPN SI BCW 32	1
Q701	J707419P1	TSTR JFET SI BF511	1
Q702	J707387P1	TSTR PNP SI BCW 30	1
R000	J707385P332	RES MFIM 1/8W 3K3 5% G4/G5/G6	1
R100	J707385P101	RES MFLM 1/8W 100R 5%	1
R101	J707385P470	RES MFLM 1/8W 47R 5%	1
R102	J707385P471	RES MFLM 1/8W 470R 5%	1
R103	J707385P390	RES MFLM 1/8W 39R 5%	1
R104	J707385P331	RES MFLM 1/8W 330R 5%	1
R105	J707385P122	RES MFLM 1/8W 1K2 5%	1
R106	J707385P100	RES MFLM 1/8W 10R 5%	1
R107	J707385P100	RES MFLM 1/8W 10R 5%	1
R108	J707385P560	RES MFLM 1/8W 56R 5%	1
R109	J707385P100	RES MFLM 1/8W 10R 5%	1
R110	J707385P100	RES MFLM 1/8W 10R 5% G1/G2/G3	1
R110	J707385P910	RES MFLM 1/8W 1R0 20% G4/G5/G6	1
R111	J707385P220	RES MFLM 1/8W 22R 5%	1
R112	J707385P947	RES MFLM 1/8W 4R7 20%	1
R113	J707385P100	RES MFLM 1/8W 10R 5%	1
R114	J707385P910	RES MFLM 1/8W 1R0 20% G1/G2/G3	1
R114	J707385P918	RES MFLM 1/8W 1R8 20% G4/G5/G6	1
R115	J707385P910	RES MFLM 1/8W 1R0 20% G1/G2/G3	1
R115	J707385P918	RES MFLM 1/8W 1R8 20% G4/G5/G6	1
R116	J707385P121	RES MFLM 1/8W 120R 5%	1
R117	J707385P220	RES MFLM 1/8W 22R 5%	1
R118	J707385P473	RES MFLM 1/8W 47K 5%	1
R119	J707385P820	RES MFLM 1/8W 82R 5%	1
R120	J707385P820	RES MFLM 1/8W 82R 5%	1

Pos	Code No	Description	Qt
R121	J707385P333	RES MFILM 1/8W 33K 5%	1
R122	J707385P221	RES MFLM 1/8W 220R 5%	1
R123	J707385P221	RES MFLM 1/8W 220R 5%	1
R124	J707385P101	RES MFLM 1/8W 100R 5% G1/G2/G3	1
R124	J707385P221	RES MFLM 1/8W 220R 5% G4/G5/G6	1
R125	J707385P330	RES MFLM 1/8W 33R 5%	1
R126	J707385P330	RES MFLM 1/8W 33R 5%	1
R127	J707385P330	RES MFLM 1/8W 33R 5%	1
R128	J707385P100	RES MFLM 1/8W 10R 5%	1
R129	J707385P121	RES MFLM 1/8W 120R 5% G1/G2/G3	1
R129	J707385P560	RES MFLM 1/8W 56R 5% G4/G5/G6	1
R130	J707385P121	RES MFLM 1/8W 120R 5% G1/G2/G3	1
R130	J707385P560	RES MFLM 1/8W 56R 5% G4/G5/G6	1
R131	J707385P392	RES MFLM 1/8W 3K9 5%	1
R132	J708538P9	RES VAR CERM 200K 20%	1
R133	J708538P4	RES VAR CERM 5K0 20%	1
R134	J707385P100	RES MFLM 1/8W 10R 5%	1
R135	J706147P2	RES THERM PTC 80R 25%	1
R136	J707385P682	RES MFLM 1/8W 6K8 5%	1
R137	J707385P223	RES MFLM 1/8W 22K 5%	1
R138	J707385P472	RES MFLM 1/8W 4K7 5%	1
R139	J707385P472	RES MFLM 1/8W 4K7 5%	1
R140	J707385P333	RES MFLM 1/8W 33K 5%	1
R141	J707385P333	RES MFLM 1/8W 33K 5%	1
R142	J707385P104	RES MFLM 1/8W 100K 5%	1
R143	J707385P222	RES MFLM 1/8W 2K2 5%	1
R144	J707385P222	RES MFLM 1/8W 2K2 5%	1
R145	J707385P223	RES MFLM 1/8W 22K 5%	1
R146	J707385P104	RES MFLM 1/8W 100K 5%	1
R147	J707385P104	RES MFLM 1/8W 100K 5%	1
R148	J707385P123	RES MFLM 1/8W 12K 5%	1
R149	J707385P472	RES MFLM 1/8W 4K7 5%	1
R150	J707385P102	RES MFLM 1/8W 1K0 5%	1
R151	J707385P683	RES MFLM 1/8W 68K 5%	1
R152	J707385P104	RES MFLM 1/8W 100K 5%	1
R153	J707385P472	RES MFLM 1/8W 4K7 5%	1
R154	J707385P274	RES MFLM 1/8W 270K 5%	1

DATE: 2/29/1988

Pos	Code No	Description	Qt
R155	J707385P682	RES MFLM 1/8W 6K8 5%	1
R156	J707385P102	RES MFLM 1/8W 1KO 5%	1
R157	J707385P100	RES MFLM 1/8W 10R 5%	1
R158	J707385P102	RES MFLM 1/8W 1KO 5%	1
R159	J707385P472	RES MFLM 1/8W 4K7 5%	1
R160	J707385P104	RES MFLM 1/8W 100K 5%	1
R161	J709725P1	RES THERM PTC 1KO	1
R162	J707385P220	RES MFLM 1/8W 22R 5%	1
R201	J707385P561	RES MFLM 1/8W 560R 5%	1
R202	J707385P271	RES MFLM 1/8W 270R 5%	1
R203	J707385P153	RES MFLM 1/8W 15K 5%	1
R204	J707385P153	RES MFLM 1/8W 15K 5%	1
R205	J707385P472	RES MFLM 1/8W 4K7 5%	1
R206	J707385P272	RES MFLM 1/8W 2K7 5%	1
R207	J707385P563	RES MFLM 1/8W 56K 5%	1
R208	J707385P563	RES MFLM 1/8W 56K 5%	1
R209	J707385P271	RES MFLM 1/8W 270R 5%	1
R210	J707385P331	RES MFLM 1/8W 330R 5%	1
R301	J707385P331	RES MFLM 1/8W 330R 5%	1
R302	J707385P392	RES MFLM 1/8W 3K9 5%	1
R303	J707385P104	RES MFLM 1/8W 100K 5%	1
R304	J707385P104	RES MFLM 1/8W 100K 5%	1
R306	J707385P272	RES MFLM 1/8W 2K7 5%	1
R307	J707385P681	RES MFLM 1/8W 680R 5%	1
R308	J707385P470	RES MFLM 1/8W 47R 5%	1
R309	J707385P270	RES MFLM 1/8W 27R 5%	1
R310	J707385P104	RES MFLM 1/8W 100K 5%	1
R311	J707385P101	RES MFLM 1/8W 100R 5%	1
R312	J707385P104	RES MFLM 1/8W 100K 5%	1
R313	J707385P123	RES MFLM 1/8W 12K 5%	1
R314	J707385P104	RES MFLM 1/8W 100K 5%	1
R315	J707385P822	RES MFLM 1/8W 8K2 5%	1
R316	J707385P104	RES MFLM 1/8W 100K 5%	1
R317	J707385P471	RES MFLM 1/8W 470R 5%	1
R318	J707385P100	RES MFLM 1/8W 10R 5%	1
R319	J707385P101	RES MFLM 1/8W 100R 5%	1
R320	J707385P222	RES MFLM 1/8W 2K2 5%	1

Pos	Code No	Description	Qt
R321	J707385P270	RES MFLM 1/8W 27R 5%	1
R322	J707385P471	RES MFLM 1/8W 470R 5%	1
R323	J707385P104	RES MFLM 1/8W 100K 5%	1
R324	J707385P104	RES MFLM 1/8W 100K 5%	1
R325	J707385P100	RES MFLM 1/8W 10R 5%	1
R327	J707385P123	RES MFLM 1/8W 12K 5%	1
R328	J707385P332	RES MFLM 1/8W 3K3 5%	1
R329	J707385P102	RES MFLM 1/8W 1KO 5%	1
R401	J707385P390	RES MFLM 1/8W 39R 5%	1
R402	J707385P100	RES MFLM 1/8W 10R 5%	1
R403	J707385P222	RES MFLM 1/8W 2K2 5%	1
R404	J707385P472	RES MFLM 1/8W 4K7 5%	1
R405	J707385P100	RES MFLM 1/8W 10R 5%	1
R406	J707385P820	RES MFLM 1/8W 82R 5%	1
R407	J707385P470	RES MFLM 1/8W 47R 5%	1
R408	J707385P470	RES MFLM 1/8W 47R 5%	1
R409	J707385P332	RES MFLM 1/8W 3K3 5%	1
R410	J707385P471	RES MFLM 1/8W 470R 5%	1
R411	J707385P123	RES MFLM 1/8W 12K 5%	1
R412	J707385P472	RES MFLM 1/8W 4K7 5%	1
R413	J707385P821	RES MFLM 1/8W 820R 5%	1
R414	J707385P332	RES MFLM 1/8W 3K3 5%	1
R415	J707385P222	RES MFLM 1/8W 2K2 5%	1
R416	J707385P562	RES MFLM 1/8W 5K6 5%	1
R417	J707385P103	RES MFLM 1/8W 10K 5%	1
R418	J707385P153	RES MFLM 1/8W 15K 5%	1
R419	J707385P182	RES MFLM 1/8W 1K8 5%	1
R420	J707385P182	RES MFLM 1/8W 1K8 5%	1
R421	J707385P182	RES MFLM 1/8W 1K8 5%	1
R422	J707385P473	RES MFLM 1/8W 47K 5%	1
R423	J707385P153	RES MFLM 1/8W 15K 5%	1
R424	J708538P5	RES VAR CERM 10K 20%	1
R425	J707385P272	RES MFLM 1/8W 2K7 5%	1
R426	J707385P563	RES MFLM 1/8W 56K 5%	1
R427	J707385P273	RES MFLM 1/8W 27K 5%	1
R428	J707385P683	RES MFLM 1/8W 68K 5%	1
R429	J707385P104	RES MFLM 1/8W 100K 5%	1

DATE: 2/29/1988

Pos	Code No	Description	Qt
R430	J707385P334	RES MFLM 1/8W 330K 5%	1
R431	J707385P473	RES MFLM 1/8W 47K 5%	1
R432	J707385P473	RES MFLM 1/8W 47K 5%	1
R433	J707385P271	RES MFLM 1/8W 270R 5%	1
R434	J707385P102	RES MFLM 1/8W 1K0 5%	1
R435	J706147P3	RES THERM PTC 250R 25%	1
R436	J707385P392	RES MFLM 1/8W 3K9 5%	1
R437	J707406P7	RES THERM NTC 220R 10%	1
R438	J707385P222	RES MFLM 1/8W 2K2 5%	1
R439	J707385P392	RES MFLM 1/8W 3K9 5%	1
R440	J707385P392	RES MFLM 1/8W 3K9 5%	1
R441	J707385P101	RES MFLM 1/8W 100R 5%	1
R442	J708538P6	RES VAR CERM 20K 20%	1
R444	J707385P473	RES MFLM 1/8W 47K 5%	1
R445	J707385P273	RES MFLM 1/8W 27K 5%	1
R446	J707385P224	RES MFLM 1/8W 220K 5%	1
R447	J707385P392	RES MFLM 1/8W 3K9 5%	1
R448	J707385P101	RES MFLM 1/8W 100R 5%	1
R449	J707385P470	RES MFLM 1/8W 47R 5%	1
R450	J707385P103	RES MFLM 1/8W 10K 5%	1
R452	J707385P332	RES MFLM 1/8W 3K3 5%	1
R501	J707385P821	RES MFLM 1/8W 820R 5%	1
R502	J707385P821	RES MFLM 1/8W 820R 5%	1
R504	J707385P104	RES MFLM 1/8W 100K 5%	1
R505	J707385P104	RES MFLM 1/8W 100K 5%	1
R508	J707385P103	RES MFLM 1/8W 10K 5%	1
R509	J707385P151	RES MFLM 1/8W 150R 5%	1
R510	J707385P103	RES MFLM 1/8W 10K 5%	1
R512	J707385P561	RES MFLM 1/8W 560R 5%	1
R513	J707385P272	RES MFLM 1/8W 2K7 5%	1
R514	J707385P682	RES MFLM 1/8W 6K8 5%	1
R515	J707385P221	RES MFLM 1/8W 220R 5%	1
R516	J707385P221	RES MFLM 1/8W 220R 5%	1
R517	J707385P101	RES MFLM 1/8W 100R 5%	1
R518	J707385P100	RES MFLM 1/8W 10R 5%	1
R529	J707385P392	RES MFLM 1/8W 3K9 5%	1
R602	J707385P122	RES MFLM 1/8W 1K2 5%	1

Pos	Code No	Description	Qt
R603	J707385P122	RES MFLM 1/8W 1K2 5%	1
R605	J707385P104	RES MFLM 1/8W 100K 5%	1
R606	J707385P104	RES MFLM 1/8W 100K 5%	1
R607	J707385P561	RES MFLM 1/8W 560R 5%	1
R608	J707385P682	RES MFLM 1/8W 6K8 5%	1
R609	J707385P332	RES MFLM 1/8W 3K3 5%	1
R610	J707385P331	RES MFLM 1/8W 330R 5%	1
R611	J707385P151	RES MFLM 1/8W 150R 5%	1
R612	J707385P102	RES MFLM 1/8W 1K0 5%	1
R613	J707385P101	RES MFLM 1/8W 100R 5%	1
R614	J707385P272	RES MFLM 1/8W 2K7 5%	1
R615	J707385P682	RES MFLM 1/8W 6K8 5%	1
R616	J707385P181	RES MFLM 1/8W 180R 5%	1
R617	J707385P563	RES MFLM 1/8W 56K 5%	1
R618	J707385P683	RES MFLM 1/8W 68K 5%	1
R619	J707385P104	RES MFLM 1/8W 100K 5%	1
R620	J707385P102	RES MFLM 1/8W 1K0 5%	1
R621	J707385P471	RES MFLM 1/8W 470R 5%	1
R622	J707385P151	RES MFLM 1/8W 150R 5%	1
R623	J707385P224	RES MFLM 1/8W 220K 5%	1
R624	J707385P223	RES MFLM 1/8W 22K 5%	1
R625	J707385P101	RES MFLM 1/8W 100R 5%	1
R626	J707385P100	RES MFLM 1/8W 10R 5%	1
R627	J707385P103	RES MFLM 1/8W 10K 5%	1
R628	J707385P224	RES MFLM 1/8W 220K 5%	1
R629	J707385P124	RES MFLM 1/8W 120K 5%	1
R630	J707385P100	RES MFLM 1/8W 10R 5%	1
R631	J707385P684	RES MFLM 1/8W 680K 5%	1
R632	J707385P223	RES MFLM 1/8W 22K 5%	1
R633	J707385P824	RES MFLM 1/8W 820K 5%	1
R634	J707385P123	RES MFLM 1/8W 12K 5%	1
R635	J707385P102	RES MFLM 1/8W 1K0 5%	1
R636	J707385P332	RES MFLM 1/8W 3K3 5%	1
R637	J707385P181	RES MFLM 1/8W 180R 5%	1
R638	J707385P474	RES MFLM 1/8W 470K 5%	1
R639	J707385P333	RES MFLM 1/8W 33K 5%	1
R640	J707385P105	RES MFLM 1/8W 1M0 10%	1

DATE: 2/29/1988

Pos	Code No	Description	Qt
R641	J707385P184	RES MFLM 1/8W 180K 5%	1
R642	J707385P184	RES MFLM 1/8W 180K 5%	1
R643	J707385P105	RES MFLM 1/8W 1M0 10%	1
R644	J707385P473	RES MFLM 1/8W 47K 5%	1
R645	J707385P153	RES MFLM 1/8W 15K 5%	1
R646	J707385P393	RES MFLM 1/8W 39K 5%	1
R647	J707385P333	RES MFLM 1/8W 33K 5%	1
R649	J707385P473	RES MFLM 1/8W 47K 5%	1
R650	J707385P562	RES MFLM 1/8W 5K6 5%	1
R651	J707385P473	RES MFLM 1/8W 47K 5%	1
R652	J707385P223	RES MFLM 1/8W 22K 5%	1
R653	J707385P823	RES MFLM 1/8W 82K 5%	1
R654	J707385P153	RES MFLM 1/8W 15K 5%	1
R655	J707385P183	RES MFLM 1/8W 18K 5%	1
R656	J707385P393	RES MFLM 1/8W 39K 5%	1
R657	J707385P823	RES MFLM 1/8W 82K 5%	1
R658	J707385P154	RES MFLM 1/8W 150K 5%	1
R659	J707385P223	RES MFLM 1/8W 22K 5%	1
R660	J707385P333	RES MFLM 1/8W 33K 5%	1
R661	J707385P473	RES MFLM 1/8W 47K 5%	1
R662	J707385P473	RES MFLM 1/8W 47K 5%	1
R663	J708538P6	RES VAR CERM 20K 20%	1
R664	J707385P473	RES MFLM 1/8W 47K 5%	1
R665	J707385P824	RES MFLM 1/8W 820K 5%	1
R666	J707385P124	RES MFLM 1/8W 120K 5%	1
R667	J707385P124	RES MFLM 1/8W 120K 5%	1
R668	J707385P122	RES MFLM 1/8W 1K2 5%	1
R669	J707385P221	RES MFLM 1/8W 220R 5%	1
R670	J707385P103	RES MFLM 1/8W 10K 5%	1
R671	J707385P562	RES MFLM 1/8W 5K6 5%	1
R672	J707385P822	RES MFLM 1/8W 8K2 5%	1
R673	J707385P822	RES MFLM 1/8W 8K2 5%	1
R674	J707385P101	RES MFLM 1/8W 100R 5%	1
R675	J708538P5	RES VAR CERM 10K 20%	1
R676	J707385P562	RES MFLM 1/8W 5K6 5%	1
R677	J708538P5	RES VAR CERM 10K 20%	1
R678	J707385P470	RES MFLM 1/8W 47R 5%	1

Pos	Code No	Description	Qt
R679	J707385P821	RES MFLM 1/8W 820R 5%	1
R680	J708538P6	RES VAR CERM 20K 20%	1
R681	J707385P223	RES MFLM 1/8W 22K 5%	1
R682	J707385P152	RES MFLM 1/8W 1K5 5%	1
R683	J707385P223	RES MFLM 1/8W 22K 5%	1
R684	J707385P183	RES MFLM 1/8W 18K 5%	1
R685	J707385P183	RES MFLM 1/8W 18K 5%	1
R686	J707385P103	RES MFLM 1/8W 10K 5%	1
R687	J707385P103	RES MFLM 1/8W 10K 5%	1
R689	J707385P105	RES MFLM 1/8W 1M0 10%	1
R690	J707385P124	RES MFLM 1/8W 120K 5%	1
R691	J707385P273	RES MFLM 1/8W 27K 5%	1
R692	J707385P223	RES MFLM 1/8W 22K 5%	1
R693	J707385P105	RES MFLM 1/8W 1M0 10%	1
R694	J707385P223	RES MFLM 1/8W 22K 5%	1
R695	J707385P105	RES MFLM 1/8W 1M0 10%	1
R696	J707385P223	RES MFLM 1/8W 22K 5%	1
R697	J707385P105	RES MFLM 1/8W 1M0 10%	1
R698	J707385P103	RES MFLM 1/8W 10K 5%	1
R699	J707385P392	RES MFLM 1/8W 3K9 5%	1
R702	A701250P413	RES MFILM 133K 1% 1/4W	1
R703	A701250P213	RES MFILM 1K33 1% 1/4W	1
R704	A701250P326	RES MFILM 18K2 1% 1/4W	1
R707	J707385P104	RES MFLM 1/8W 100K 5%	1
R708	J707385P105	RES MFLM 1/8W 1M0 10%	1
R709	J707385P181	RES MFLM 1/8W 180R 5%	1
R710	J707385P101	RES MFLM 1/8W 100R 5%	1
R711	J707385P223	RES MFLM 1/8W 22K 5%	1
R712	J707385P154	RES MFLM 1/8W 150K 5%	1
R713	J707385P821	RES MFLM 1/8W 820R 5%	1
R714	J707385P104	RES MFLM 1/8W 100K 5%	1
R715	J707385P563	RES MFLM 1/8W 56K 5%	1
U100	J708165P2	IC LIN OP-AMP 324	1
U201	J708333P1	IC LIN VR FIX 4785	1
U401	J707449P1	IC LIN IF-AMP 3357	1
U402	M905766G1	INT CKT SQ 4002 G1/G2/G5/G4	1
U402	M905766G2	INT CKT SQ 4003 G6/G3	1

DATE: 2/29/1988

Pos	Code No	Description	Qt
U601	J707859P1	IC LIN OP-AMP 204	1
U602	J707859P1	IC LIN OP-AMP 204	1
U604	J707859P1	IC LIN OP-AMP 204	1
U606	J707243P1	IC DIG REG 4094	1
U607	J707374P1	IC PLL PRESC 8793	1
U608	B800902P1	IC PLL SYN CUSTOM DES	1
U609	J707859P1	IC LIN OP-AMP 204	1
U610	J708503P2	IC LIN CMPAR LM 339	1
U615	J708621P2	CPLR OPTO PC 827	1
U616	J708503P2	IC LIN CMPAR LM 339	1
W003	J707256P1	COIL FIX	1
W004	J707256P1	COIL FIX	1
W005	J708717P1	STRAP	1
W006	J708716P1	STRAP	1
Y401	J707309P1	CRYSTAL UNIT 20.9450MHZ	1
Y701	J707567P18	CRYSTAL UNIT 7.3750MHZ	1
Z401	J707310P1	FLTR CRY 21.4 +/-7.50KHZ G1/G4	1
Z401	J707310P2	FLTR CRY 21.4 +/-7.50KHZ G2/G5	1
Z401	J707310P3	FLTR CRY 21.4 +/-3.75KHZ G3/G6	1
Z402	J707446P1	FLTR CER 455K +/-10KHZ G1/G4	1
Z402	J707446P3	FLTR CER 455K +/-7.5KHZ G2/G5	1
Z402	J707446P4	FLTR CER 455K +/-4.5KHZ G3/G6	1
Z403	J707446P1	FLTR CER 455K +/-10KHZ G1/G4	1
Z403	J707446P3	FLTR CER 455K +/-7.5KHZ G2/G5	1
Z403	J707446P4	FLTR CER 455K +/-4.5KHZ G3/G6	1
	M905893P1R2	BD PW	1
		NON ELECTRONICAL PARTS	
	J708561P3	COIL FIX	1
	K805776P1	CASTING HEAT SINK	1
	K805569G2	SHIELD METALLIZED	1
	J706281P7	CORE SCREW FERR U 25	8
	J706804P2	WASH INS CRYS FOR HC-18/U	4

Pos	Code No	Description	Qt

DAT 11/25/1987

Pos	Code No	Description	Qt
C100	J707809P13	CAP CER NPO 10P 5%	1
C101	J707438P4	CAP CER CL2 680P 10%	1
C102	J707438P7	CAP CER CL2 2N2 10%	1
C103	J707436P65	CAP CER NPO 150P 5%	1
C104	J707809P15	CAP CER NPO 15P 5%	1
C105	J707809P17	CAP CER NPO 22P 5%	1
C106	J707809P15	CAP CER NPO 15P 5%	1
C107	J707438P7	CAP CER CL2 2N2 10%	1
C108	J707438P7	CAP CER CL2 2N2 10%	1
C109	J707809P25	CAP CER NPO 100P 5%	1
C110	J707809P23	CAP CER NPO 68P 5% G1/G2/G3	1
C110	J707809P17	CAP CER NPO 22P 5% G4/G5/G6	1
C111	J707438P7	CAP CER CL2 2N2 10%	1
C112	J707438P14	CAP CER CL2 10N 10%	1
C113	J707438P7	CAP CER CL2 2N2 10%	1
C114	J707438P7	CAP CER CL2 2N2 10%	1
C115	J707809P27	CAP CER NPO 150P 5% G1/G2/G3	1
C115	J707809P23	CAP CER NPO 68P 5% G4/G5/G6	1
C116	J707809P27	CAP CER NPO 150P 5% G1/G2/G3	1
C116	J707809P24	CAP CER NPO 82P 5% G4/G5/G6	1
C120	J707353P6	CAP ELECT 4U7 25V	1
C121	J707438P14	CAP CER CL2 10N 10%	1
C122	J707438P7	CAP CER CL2 2N2 10%	1
C123	J707438P14	CAP CER CL2 10N 10%	1
C124	J707438P7	CAP CER CL2 2N2 10%	1
C125	A700006P40	CAP MICA 170P 5% G1/G2/G3	1
C125	A700006P38	CAP MICA 150P 5% G4/G5/G6	1
C126	J709524P59	CAP CER RF 270P 5% G1/G2/G3	1
C126	J709524P49	CAP CER RF 100P 5% G4/G5/G6	1
C127	J709524P51	CAP CER RF 120P 5% G1/G2/G3	1
C127	J709524P45	CAP CER RF 68P 5% G4/G5/G6	1
C128	A700006P35	CAP MICA 110P 5% G1/G2/G3	1
C128	A700006P26	CAP MICA 47P 5% G4/G5/G6	1
C130	J707809P14	CAP CER NPO 12P 5%	1
C131	J707809P9	CAP CER NPO 4P7 .25P	1
C132	J707809P12	CAP CER NPO 8P2 .25P	1
C133	J707809P12	CAP CER NPO 8P2 .25P	1

Pos	Code No	Description	Qt
C134	J707353P6	CAP ELECT 4U7 25V	1
C136	J707438P20	CAP CER CL2 33N 10%	1
C137	J707438P7	CAP CER CL2 2N2 10%	1
C138	J707438P7	CAP CER CL2 2N2 10%	1
C139	J707438P7	CAP CER CL2 2N2 10%	1
C140	J707438P7	CAP CER CL2 2N2 10%	1
C141	J707438P7	CAP CER CL2 2N2 10%	1
C142	A700006P14	CAP MICA 18P 5%	1
C143	A700006P26	CAP MICA 47P 5%	1
C144	A700006P26	CAP MICA 47P 5%	1
C145	A700006P18	CAP MICA 24P 5%	1
C146	J707438P7	CAP CER CL2 2N2 10%	1
C147	J707438P7	CAP CER CL2 2N2 10%	1
C148	J707438P7	CAP CER CL2 2N2 10%	1
C149	J707438P7	CAP CER CL2 2N2 10%	1
C150	J707809P10	CAP CER NPO 5P6 .25P G1/G2/G3	1
C150	J707809P12	CAP CER NPO 5P6 .25P G4/G5/G6	1
C151	J707809P10	CAP CER NPO 5P6 .25P G1/G2/G3	1
C151	J707809P12	CAP CER NPO 5P6 .25P G4/G5/G6	1
C152	J707438P7	CAP CER CL2 2N2 10%	1
C153	J707438P7	CAP CER CL2 2N2 10%	1
C154	J707438P7	CAP CER CL2 2N2 10%	1
C155	J707438P7	CAP CER CL2 2N2 10%	1
C156	J707353P3	CAP ELECT 0U47 50V	1
C157	J707438P7	CAP CER CL2 2N2 10%	1
C158	J707438P7	CAP CER CL2 2N2 10%	1
C159	J707438P14	CAP CER CL2 10N 10%	1
C160	J707436P77	CAP CER NPO 470P 5%	1
C161	J707438P7	CAP CER CL2 2N2 10%	1
C162	J707438P14	CAP CER CL2 10N 10%	1
C163	J707438P20	CAP CER CL2 33N 10%	1
C164	J707438P7	CAP CER CL2 2N2 10%	1
C165	J707809P16	CAP CER NPO 18P 5% G1/G2/G3	1
C165	J707809P17	CAP CER NPO 22P 5% G4/G5/G6	1
C166	J707438P5	CAP CER CL2 1N 10%	1
C167	J707412P13	CAP PYES 470N 10%	1
C168	J707438P7	CAP CER CL2 2N2 10%	1

DATE: 11/25/1987

Pos	Code No	Description	Qt
C169	J707809P1	CAP CER NPO 1P0 .25P	1
C170	J707438P14	CAP CER CL2 10N 10%	1
C171	J707438P14	CAP CER CL2 10N 10%	1
C172	J707438P14	CAP CER CL2 10N 10%	1
C201	J707438P26	CAP CER CL2 100N 10%	1
C202	J707444P8	CAP TA SOL 22U 16V	1
C203	J706005P12	CAP ELECT 47U 40V	1
C204	J707438P7	CAP CER CL2 2N2 10%	1
C205	J707412P9	CAP PYES 100N 10%	1
C206	J707444P4	CAP TA SOL 1U 35V	1
C301	J707436P69	CAP CER NPO 220P 5%	1
C302	J707438P5	CAP CER CL2 1N 10%	1
C304	J707436P10	CAP CER NPO 5P6 .25P	1
C305	J707436P33	CAP CER NPO 27P 5%	1
C306	J707483P4	CAP PHEN 0P56 5%	1
C307	J707438P5	CAP CER CL2 1N 10%	1
C309	J707436P33	CAP CER NPO 27P 5%	1
C310	J707438P5	CAP CER CL2 1N 10%	1
C311	J707436P10	CAP CER NPO 5P6 .25P	1
C312	J707436P87	CAP CER NPO 1N2 5%	1
C315	J707436P10	CAP CER NPO 5P6 .25P	1
C317	J707444P2	CAP TA SOL 0U22 35V	1
C318	J707438P5	CAP CER CL2 1N 10%	1
C319	J707436P33	CAP CER NPO 27P 5%	1
C320	J707438P5	CAP CER CL2 1N 10%	1
C322	J707483P7	CAP PHEN 1P00 5%	1
C323	J707483P6	CAP PHEN 0P82 5%	1
C324	J707436P7	CAP CER NPO 3P3 .25P	1
C325	J707438P5	CAP CER CL2 1N 10%	1
C326	J707436P33	CAP CER NPO 27P 5%	1
C328	J707436P33	CAP CER NPO 27P 5%	1
C331	J707483P6	CAP PHEN 0P82 5%	1
C332	J707436P33	CAP CER NPO 27P 5%	1
C333	J707436P7	CAP CER NPO 3P3 .25P	1
C334	J707436P8	CAP CER NPO 3P9 .25P	1
C335	J707438P5	CAP CER CL2 1N 10%	1
C338	J707436P37	CAP CER NPO 33P 5%	1

Pos	Code No	Description	Qt
C339	J707438P5	CAP CER CL2 1N 10%	1
C340	J707438P8	CAP CER CL2 3N3 10%	1
C345	J707438P5	CAP CER CL2 1N 10%	1
C347	J707438P5	CAP CER CL2 1N 10%	1
C348	J707438P5	CAP CER CL2 1N 10%	1
C350	J707436P10	CAP CER NPO 5P6 .25P	1
C351	J707436P25	CAP CER NPO 18P 5%	1
C353	J707483P8	CAP PHEN 1P20 5%	1
C354	J707436P25	CAP CER NPO 18P 5%	1
C355	J707436P9	CAP CER NPO 4P7 .25P	1
C356	J707438P5	CAP CER CL2 1N 10%	1
C357	J707436P1	CAP CER NPO 1P0 .25P	1
C358	J707436P1	CAP CER NPO 1P0 .25P	1
C359	J707438P5	CAP CER CL2 1N 10%	1
C401	J707438P8	CAP CER CL2 3N3 10%	1
C402	J707438P8	CAP CER CL2 3N3 10%	1
C403	J707438P8	CAP CER CL2 3N3 10%	1
C404	J707436P37	CAP CER NPO 33P 5%	1
C405	J707438P26	CAP CER CL2 100N 10%	1
C406	J707436P10	CAP CER NPO 5P6 .25P	1
C407	J707436P33	CAP CER NPO 27P 5%	1
C408	J707438P5	CAP CER CL2 1N 10%	1
C409	J707438P8	CAP CER CL2 3N3 10%	1
C410	J707444P8	CAP TA SOL 22U 16V	1
C411	J707438P26	CAP CER CL2 100N 10%	1
C412	J707438P26	CAP CER CL2 100N 10%	1
C413	J707436P37	CAP CER NPO 33P 5%	1
C414	J707438P8	CAP CER CL2 3N3 10%	1
C415	J707436P69	CAP CER NPO 220P 5%	1
C416	J707436P61	CAP CER NPO 100P 5%	1
C417	J707436P33	CAP CER NPO 27P 5%	1
C418	J707438P14	CAP CER CL2 10N 10%	1
C419	J707438P26	CAP CER CL2 100N 10%	1
C420	J707438P14	CAP CER CL2 10N 10%	1
C421	J707438P26	CAP CER CL2 100N 10%	1
C422	J707438P26	CAP CER CL2 100N 10%	1
C423	J707436P13	CAP CER NPO 10P 5%	1

Pos	Code No	Description	Qt
C424	J707438P8	CAP CER CL2 3N3 10%	1
C425	J707412P13	CAP PYES 470N 10%	1
C426	J707436P93	CAP CER NPO 2N2 5%	1
C427	J707436P73	CAP CER NPO 330P 5%	1
C428	J707436P73	CAP CER NPO 330P 5%	1
C429	J707438P14	CAP CER CL2 10N 10%	1
C430	J707444P8	CAP TA SOL 22U 16V	1
C431	J707444P8	CAP TA SOL 22U 16V	1
C432	J707438P26	CAP CER CL2 100N 10%	1
C433	J707438P26	CAP CER CL2 100N 10%	1
C434	J707438P8	CAP CER CL2 3N3 10%	1
C435	J707436P1	CAP CER NPO 1P0 .25P	1
C436	J707438P26	CAP CER CL2 100N 10%	1
C437	J707436P45	CAP CER NPO 47P 5%	1
C438	J707438P14	CAP CER CL2 10N 10%	1
C501	J707412P11	CAP PYES 220N 10%	1
C502	J707412P11	CAP PYES 220N 10%	1
C504	A700235P16	CAP CER N150 18P 5%	1
C505	A700235P11	CAP CER N150 6P8 .25P	1
C506	A700235P20	CAP CER N150 39P 5%	1
C507	A700235P19	CAP CER N150 33P 5%	1
C508	A700235P25	CAP CER N150 100P 5%	1
C509	J707436P6	CAP CER NPO 2P7 .25P	1
C512	J707436P5	CAP CER NPO 2P2 .25P	1
C513	J707438P2	CAP CER CL2 330P 10%	1
C514	J707438P6	CAP CER CL2 1N5 10%	1
C517	J707444P6	CAP TA SOL 4U7 35V	1
C518	J707436P2	CAP CER NPO 1P2 .25P	1
C519	J707438P6	CAP CER CL2 1N5 10%	1
C520	J707436P69	CAP CER NPO 220P 5%	1
C521	J707436P29	CAP CER NPO 22P 5%	1
C522	J707438P6	CAP CER CL2 1N5 10%	1
C523	J707436P5	CAP CER NPO 2P2 .25P	1
C524	J707438P3	CAP CER CL2 470P 10%	1
C525	J707438P3	CAP CER CL2 470P 10%	1
C527	J707438P3	CAP CER CL2 470P 10%	1
C528	J707438P26	CAP CER CL2 100N 10%	1

Pos	Code No	Description	Qt
C540	J707438P3	CAP CER CL2 470P 10%	1
C541	J707438P3	CAP CER CL2 470P 10%	1
C543	J707438P3	CAP CER CL2 470P 10%	1
C544	J707438P3	CAP CER CL2 470P 10%	1
C545	J707436P61	CAP CER NPO 100P 5%	1
C601	J707412P11	CAP PYES 220N 10%	1
C602	J707412P11	CAP PYES 220N 10%	1
C603	J707438P26	CAP CER CL2 100N 10%	1
C604	A700235P13	CAP CER N150 10P 5%	1
C605	A700235P10	CAP CER N150 5P6 .25P	1
C606	A700235P38	CAP CER N150 16P 5%	1
C607	A700235P11	CAP CER N150 6P8 .25P	1
C608	A700233P9	CAP CER CL2 2N2 20%	1
C610	J707436P61	CAP CER NPO 100P 5%	1
C611	J707436P6	CAP CER NPO 2P7 .25P	1
C612	J707438P6	CAP CER CL2 1N5 10%	1
C613	J707444P6	CAP TA SOL 4U7 35V	1
C614	J707438P6	CAP CER CL2 1N5 10%	1
C615	J707438P10	CAP CER CL2 4N7 10%	1
C616	J707438P4	CAP CER CL2 680P 10%	1
C617	J707436P49	CAP CER NPO 56P 5%	1
C618	J707436P1	CAP CER NPO 1P0 .25P	1
C619	J707438P6	CAP CER CL2 1N5 10%	1
C620	J707436P61	CAP CER NPO 100P 5%	1
C621	J707436P21	CAP CER NPO 15P 5%	1
C622	J707436P5	CAP CER NPO 2P2 .25P	1
C623	J707438P26	CAP CER CL2 100N 10%	1
C624	J707436P61	CAP CER NPO 100P 5%	1
C625	J707438P6	CAP CER CL2 1N5 10%	1
C626	J707438P5	CAP CER CL2 1N 10%	1
C627	J707438P26	CAP CER CL2 100N 10%	1
C628	J707436P3	CAP CER NPO 1P5 .25P	1
C629	J707436P65	CAP CER NPO 150P 5%	1
C630	J707438P26	CAP CER CL2 100N 10%	1
C631	J707438P6	CAP CER CL2 1N5 10%	1
C632	J707444P6	CAP TA SOL 4U7 35V	1
C633	J707444P17	CAP TA SOL 47U 10V	1

DATE: 11/25/1987

Pos	Code No	Description	Qt
C634	J707438P26	CAP CER CL2 100N 10%	1
C635	J707438P1	CAP CER CL2 220P 10%	1
C636	J707444P17	CAP TA SOL 47U 10V	1
C637	J707438P26	CAP CER CL2 100N 10%	1
C638	J707438P5	CAP CER CL2 1N 10%	1
C639	J707438P8	CAP CER CL2 3N3 10%	1
C640	J707412P8	CAP PYES 68N 10%	1
C641	J707412P13	CAP PYES 470N 10%	1
C642	J707412P13	CAP PYES 470N 10%	1
C643	J707438P26	CAP CER CL2 100N 10%	1
C644	J707436P6	CAP CER NPO 2P7 .25P	1
C645	J707436P25	CAP CER NPO 18P 5%	1
C646	J707436P63	CAP CER NPO 120P 5%	1
C647	J707436P13	CAP CER NPO 10P 5%	1
C652	J707438P22	CAP CER CL2 47N 10%	1
C653	J707444P6	CAP TA SOL 4U7 35V	1
C656	J707438P3	CAP CER CL2 470P 10%	1
C657	J707438P3	CAP CER CL2 470P 10%	1
C659	J707438P5	CAP CER CL2 1N 10%	1
C660	J707438P14	CAP CER CL2 10N 10%	1
C666	J707438P3	CAP CER CL2 470P 10%	1
C667	J707438P3	CAP CER CL2 470P 10%	1
C701	J707436P29	CAP CER NPO 22P 5%	1
C702	J708702P22	CAP CER N750 56P 5%	1
C703	J707436P69	CAP CER NPO 220P 5%	1
C705	J707438P5	CAP CER CL2 1N 10%	1
C706	J707438P14	CAP CER CL2 10N 10%	1
C707	J707436P10	CAP CER NPO 5P6 .25P	1
C708	J707438P14	CAP CER CL2 10N 10%	1
C709	J707438P14	CAP CER CL2 10N 10%	1
D100	A700047P3	DIO SI SIG 1N6263	1
D101	J706892P1	DIO SI PIN UM 9401	1
D102	J706892P1	DIO SI PIN UM 9401	1
D103	J707390P1	DIO SI SIG BAV 74	1
D300	J707928P2	DIO SI CAP BB 809	1
D301	J707928P2	DIO SI CAP BB 809	1
D302	J707928P2	DIO SI CAP BB 809	1

Pos	Code No	Description	Qt
D303	J707928P2	DIO SI CAP BB 809	1
D304	J707928P2	DIO SI CAP BB 809	1
D305	J707928P2	DIO SI CAP BB 809	1
D306	J707928P2	DIO SI CAP BB 809	1
D307	J707928P2	DIO SI CAP BB 809	1
D401	A700025P8	DIO SI ZENR 6V8 5% 0.4W	1
D501	J707928P2	DIO SI CAP BB 809	1
D502	J707928P2	DIO SI CAP BB 809	1
D503	J707928P2	DIO SI CAP BB 809	1
D504	J707928P2	DIO SI CAP BB 809	1
D505	J707928P2	DIO SI CAP BB 809	1
D506	J707397P1	DIO SI CAP BBY 40	1
D601	J707928P2	DIO SI CAP BB 809	1
D602	J707928P2	DIO SI CAP BB 809	1
D603	J709536P1	DIO SI CAP MV 2111	1
D604	J709536P1	DIO SI CAP MV 2111	1
D605	J707389P1	DIO SI SIG BAV 99	1
D606	J708681P1	DIO SI SIG BAW 56	1
D607	J707390P1	DIO SI SIG BAV 74	1
D608	J707390P1	DIO SI SIG BAV 74	1
D610	J708681P1	DIO SI SIG BAW 56	1
D701	A700073P1	DIO SI CAP BB 409	1
D702	J707390P1	DIO SI SIG BAV 74	1
L100	K805653G9	COIL ASM 9 1/2T	1
L101	A700024P7	COIL RF FIX 0.33UH 10%	1
L102	A700024P3	COIL RF FIX 0.15UH 10%	1
L103	A700024P12	COIL RF FIX 0.82UH 10%	1
L104	K805653G2	COIL ASM 2 1/2T	1
L105	K805653G5	COIL ASM 5 1/2T G1/G2/G3	1
L105	K805653G8	COIL ASM 8 1/2T G4/G5/G6	1
L106	J707339G1	COIL FIX ASM	1
L107	K805653G4	COIL ASM 4 1/2T	1
L108	A700024P3	COIL RF FIX 0.15UH 10%	1
L109	J707256P2	COIL FIX	1
L110	J709287P1	CORE TOR FERR	1
L111	J707256P1	COIL FIX G1/G2/G3	1
L111	J707256G1	COIL ASM 1 1/2T G4/G5/G6	1

Pos	Code No	Description	Qt
L113	A700024P3	COIL RF FIX 0.15UH 10%	1
L114	J709287P1	CORE TOR FERR	1
L115	J707256P2	COIL FIX	1
L116	J709287P1	CORE TOR FERR	1
L117	J709603P2	COIL G1/G2/G3	1
L117	J709603P6	COIL ASM 1 1/2T G4/G5/G6	1
L118	J709603P1	COIL G1/G2/G3	1
L118	J709603P6	COIL FIX G4/G5/G6	1
L121	A700024P18	COIL RF FIX 2.7UH 10%	1
L122	A700024P25	COIL RF FIX 10UH 10%	1
L123	A700024P25	COIL RF FIX 10UH 10%	1
L124	K805653G7	COIL ASM 7 1/2 T	1
L125	K805653G7	COIL ASM 7 1/2 T	1
L126	K805653G8	COIL ASM 8 1/2T	1
L127	A700024P25	COIL RF FIX 10UH 10%	1
L128	A700024P25	COIL RF FIX 10UH 10%	1
L301	J709099P8	COIL RF VAR 7-1/2T	1
L302	J709099P15	COIL RF VAR 7-1/2T TAP	1
L303	J707486P11	COIL RF FIX 2.2UH 10%	1
L304	J709099P8	COIL RF VAR 7-1/2T	1
L305	J707486P2	COIL RF FIX 3.3UH 10%	1
L306	J709099P8	COIL RF VAR 7-1/2T	1
L308	J709099P8	COIL RF VAR 7-1/2T	1
L310	J709099P9	COIL RF VAR 7-1/2T TAP	1
L312	J708428P1	COIL RF VAR 45 MHZ	1
L313	J709099P12	COIL RF VAR 5-1/2T TAP	1
L314	J709099P14	COIL RF VAR 5-1/2T TAP	1
L401	J707486P3	COIL RF FIX 6.8UH 10%	1
L403	K805570G6	COIL AS M	1
L405	J708428P1	COIL RF VAR 45 MHZ	1
L406	K805570G5	COIL ASM	1
L407	A700024P25	COIL RF FIX 10UH 10%	1
L408	J708428P1	COIL RF VAR 45 MHZ	1
L409	J707431P1	COIL RF VAR 455KHZ 25%	1
L410	J707431P1	COIL RF VAR 455KHZ 25%	1
L501	A700024P21	COIL RF FIX 4.7UH 10%	1
L502	A700024P21	COIL RF FIX 4.7UH 10%	1

Pos	Code No	Description	Qt
L504	A700024P21	COIL RF FIX 4.7UH 10%	1
L505	L855671P2	COIL RADIO FREQUENCY	1
L506	A700024P21	COIL RF FIX 4.7UH 10%	1
L508	A700024P5	COIL RF FIX 0.22UH 10%	1
L601	A700024P21	COIL RF FIX 4.7UH 10%	1
L602	A700024P21	COIL RF FIX 4.7UH 10%	1
L604	A700024P21	COIL RF FIX 4.7UH 10%	1
L605	L855671P2	COIL RA DIO FREQUENCY	1
L606	A700024P21	COIL RF FIX 4.7UH 10%	1
L607	A700024P4	COIL RF FIX 0.18UH 10%	1
L608	A700024P5	COIL RF FIX 0.22UH 10%	1
L701	K805570G7	COIL ASM	1
L702	A700024P43	COIL RF FIX 330UH 10%	1
L703	A700024P27	COIL RF FIX 15UH 10%	1
P102	J707064P112	CONN PWB FEM 12-CKT	1
P105	A701883P4	CONN PWB FEM RECP	1
Q100	J707388P1	TSTR NPN SI BFR 53	1
Q101	A701940P1	TSTR NPN SI RF-PWR 0.4W	1
Q102	J709517P1	TSTR NPN SI RF-PWR 3W	1
Q103	J709162P1	TSTR NPN SI RF-PWR 27W G1/G2/G3	1
Q103	J709163P1	TSTR NPN SI RF-PWR 10W G4/G5/G6	1
Q106	J707432P1	TSTR PNP SI BCX 18	1
Q107	J707386P1	TSTR NPN SI BCW 32	1
Q108	J708406P1	TSTR NPN SI BD 233	1
Q109	J707386P1	TSTR NPN SI BCW 32	1
Q201	J707435P1	TSTR PNP SI BC 369	1
Q202	J707386P1	TSTR NPN SI BCW 32	1
Q203	J707432P1	TSTR PNP SI BCX 18	1
Q204	J707386P1	TSTR NPN SI BCW 32	1
Q301	J706011P2	TSTR NPN SI BFR 91A	1
Q302	J707817P1	TSTR JFET SI J 309	1
Q401	J707817P1	TSTR JFET SI J 309	1
Q402	J707817P1	TSTR JFET SI J 309	1
Q403	J707419P1	TSTR JFET SI BF511	1
Q404	J708418P1	TSTR NPN SI BFS 20	1
Q405	J708418P1	TSTR NPN SI BFS 20	1
R121	J707385P333	RES MFLM 1/8W 33K 5%	1

DATE: 11/25/1987

Pos	Code No	Description	Qt
Q407	J707386P1	TSTR NPN SI BCW 32	1
Q408	J707387P1	TSTR PNP SI BCW 30	1
Q501	J707817P1	TSTR JFET SI J 309	1
Q502	J708318P1	TSTR PNP SI BFT 92	1
Q601	J707817P1	TSTR JFET SI J 309	1
Q603	J708318P1	TSTR PNP SI BFT 92	1
Q604	J707433P1	TSTR MFET SI BF 989	1
Q605	J707386P1	TSTR NPN SI BCW 32	1
Q612	J707386P1	TSTR NPN SI BCW 32	1
Q613	J707386P1	TSTR NPN SI BCW 32	1
Q701	J707419P1	TSTR JFET SI BF511	1
Q702	J707387P1	TSTR PNP SI BCW 30	1
R000	J707385P332	RES MFLM 1/8W 3K3 5% G4/G5/G6	1
R100	J707385P101	RES MFLM 1/8W 100R 5%	1
R101	J707385P470	RES MFLM 1/8W 47R 5%	1
R102	J707385P471	RES MFLM 1/8W 470R 5%	1
R103	J707385P390	RES MFLM 1/8W 39R 5%	1
R104	J707385P331	RES MFLM 1/8W 330R 5%	1
R105	J707385P122	RES MFLM 1/8W 1K2 5%	1
R106	J707385P100	RES MFLM 1/8W 10R 5%	1
R107	J707385P100	RES MFLM 1/8W 10R 5%	1
R108	J707385P560	RES MFLM 1/8W 56R 5%	1
R109	J707385P100	RES MFLM 1/8W 10R 5%	1
R110	J707385P100	RES MFLM 1/8W 10R 5% G1/G2/G3	1
R110	J707385P910	RES MFLM 1/8W 1R0 20% G4/G5/G6	1
R111	J707385P220	RES MFLM 1/8W 22R 5%	1
R112	J707385P947	RES MFLM 1/8W 4R7 20%	1
R113	J707385P100	RES MFLM 1/8W 10R 5%	1
R114	J707385P910	RES MFLM 1/8W 1R0 20% G1/G2/G3	1
R114	J707385P918	RES MFLM 1/8W 1R8 20% G4/G5/G6	1
R115	J707385P910	RES MFLM 1/8W 1R0 20% G1/G2/G3	1
R115	J707385P918	RES MFLM 1/8W 1R8 20% G4/G5/G6	1
R116	J707385P121	RES MFLM 1/8W 120R 5%	1
R117	J707385P220	RES MFLM 1/8W 22R 5%	1
R118	J707385P473	RES MFLM 1/8W 47K 5%	1
R119	J707385P820	RES MFLM 1/8W 82R 5%	1
R120	J707385P820	RES MFLM 1/8W 82R 5%	1

Pos	Code No	Description	Qt
R121	J707385P333	RES MFILM 1/8W 33K 5%	1
R122	J707385P221	RES MFLM 1/8W 220R 5%	1
R123	J707385P221	RES MFLM 1/8W 220R 5%	1
R124	J707385P101	RES MFLM 1/8W 100R 5% G1/G2/G3	1
R124	J707385P221	RES MFLM 1/8W 220R 5% G4/G5/G6	1
R125	J707385P330	RES MFLM 1/8W 33R 5%	1
R126	J707385P330	RES MFLM 1/8W 33R 5%	1
R127	J707385P330	RES MFLM 1/8W 33R 5%	1
R128	J707385P100	RES MFLM 1/8W 10R 5%	1
R129	J707385P121	RES MFLM 1/8W 120R 5% G1/G2/G3	1
R129	J707385P560	RES MFLM 1/8W 56R 5% G4/G5/G6	1
R130	J707385P121	RES MFLM 1/8W 120R 5% G1/G2/G3	1
R130	J707385P560	RES MFLM 1/8W 56R 5% G4/G5/G6	1
R131	J707385P392	RES MFLM 1/8W 3K9 5%	1
R132	J708538P9	RES VAR CERM 200K 20%	1
R133	J708538P4	RES VAR CERM 5K0 20%	1
R134	J707385P100	RES MFLM 1/8W 10R 5%	1
R135	J706147P2	RES THERM PTC 80R 25%	1
R136	J707385P682	RES MFLM 1/8W 6K8 5%	1
R137	J707385P223	RES MFLM 1/8W 22K 5%	1
R138	J707385P472	RES MFLM 1/8W 4K7 5%	1
R139	J707385P472	RES MFLM 1/8W 4K7 5%	1
R140	J707385P333	RES MFLM 1/8W 33K 5%	1
R141	J707385P333	RES MFLM 1/8W 33K 5%	1
R142	J707385P104	RES MFLM 1/8W 100K 5%	1
R143	J707385P222	RES MFLM 1/8W 2K2 5%	1
R144	J707385P222	RES MFLM 1/8W 2K2 5%	1
R145	J707385P223	RES MFLM 1/8W 22K 5%	1
R146	J707385P104	RES MFLM 1/8W 100K 5%	1
R147	J707385P104	RES MFLM 1/8W 100K 5%	1
R148	J707385P123	RES MFLM 1/8W 12K 5%	1
R149	J707385P472	RES MFLM 1/8W 4K7 5%	1
R150	J707385P102	RES MFLM 1/8W 1K0 5%	1
R151	J707385P683	RES MFLM 1/8W 68K 5%	1
R152	J707385P104	RES MFLM 1/8W 100K 5%	1
R153	J707385P472	RES MFLM 1/8W 4K7 5%	1
R154	J707385P274	RES MFLM 1/8W 270K 5%	1

DATE: 11/25/1987

Pos	Code No	Description	Qt
R155	J707385P682	RES MFLM 1/8W 6K8 5%	1
R156	J707385P102	RES MFLM 1/8W 1KO 5%	1
R157	J707385P100	RES MFLM 1/8W 10R 5%	1
R158	J707385P102	RES MFLM 1/8W 1KO 5%	1
R159	J707385P472	RES MFLM 1/8W 4K7 5%	1
R160	J707385P104	RES MFLM 1/8W 100K 5%	1
R161	J709725P1	RES THERM PTC 1KO	1
R162	J707385P220	RES MFLM 1/8W 22R 5%	1
R201	J707385P561	RES MFLM 1/8W 560R 5%	1
R202	J707385P271	RES MFLM 1/8W 270R 5%	1
R203	J707385P153	RES MFLM 1/8W 15K 5%	1
R204	J707385P153	RES MFLM 1/8W 15K 5%	1
R205	J707385P472	RES MFLM 1/8W 4K7 5%	1
R206	J707385P272	RES MFLM 1/8W 2K7 5%	1
R207	J707385P563	RES MFLM 1/8W 56K 5%	1
R208	J707385P563	RES MFLM 1/8W 56K 5%	1
R209	J707385P271	RES MFLM 1/8W 270R 5%	1
R210	J707385P331	RES MFLM 1/8W 330R 5%	1
R301	J707385P331	RES MFLM 1/8W 330R 5%	1
R302	J707385P392	RES MFLM 1/8W 3K9 5%	1
R303	J707385P104	RES MFLM 1/8W 100K 5%	1
R304	J707385P104	RES MFLM 1/8W 100K 5%	1
R306	J707385P272	RES MFLM 1/8W 2K7 5%	1
R307	J707385P681	RES MFLM 1/8W 680R 5%	1
R308	J707385P470	RES MFLM 1/8W 47R 5%	1
R309	J707385P270	RES MFLM 1/8W 27R 5%	1
R310	J707385P104	RES MFLM 1/8W 100K 5%	1
R311	J707385P101	RES MFLM 1/8W 100R 5%	1
R312	J707385P104	RES MFLM 1/8W 100K 5%	1
R313	J707385P123	RES MFLM 1/8W 12K 5%	1
R314	J707385P104	RES MFLM 1/8W 100K 5%	1
R315	J707385P822	RES MFLM 1/8W 8K2 5%	1
R316	J707385P104	RES MFLM 1/8W 100K 5%	1
R317	J707385P471	RES MFLM 1/8W 470R 5%	1
R318	J707385P100	RES MFLM 1/8W 10R 5%	1
R319	J707385P101	RES MFLM 1/8W 100R 5%	1
R320	J707385P222	RES MFLM 1/8W 2K2 5%	1

Pos	Code No	Description	Qt
R321	J707385P270	RES MFLM 1/8W 27R 5%	1
R322	J707385P471	RES MFLM 1/8W 470R 5%	1
R323	J707385P104	RES MFLM 1/8W 100K 5%	1
R324	J707385P104	RES MFLM 1/8W 100K 5%	1
R325	J707385P100	RES MFLM 1/8W 10R 5%	1
R327	J707385P123	RES MFLM 1/8W 12K 5%	1
R328	J707385P332	RES MFLM 1/8W 3K3 5%	1
R329	J707385P102	RES MFLM 1/8W 1KO 5%	1
R401	J707385P390	RES MFLM 1/8W 39R 5%	1
R402	J707385P100	RES MFLM 1/8W 10R 5%	1
R403	J707385P222	RES MFLM 1/8W 2K2 5%	1
R404	J707385P472	RES MFLM 1/8W 4K7 5%	1
R405	J707385P100	RES MFLM 1/8W 10R 5%	1
R406	J707385P820	RES MFLM 1/8W 82R 5%	1
R407	J707385P470	RES MFLM 1/8W 47R 5%	1
R408	J707385P470	RES MFLM 1/8W 47R 5%	1
R409	J707385P332	RES MFLM 1/8W 3K3 5%	1
R410	J707385P471	RES MFLM 1/8W 470R 5%	1
R411	J707385P123	RES MFLM 1/8W 12K 5%	1
R412	J707385P472	RES MFLM 1/8W 4K7 5%	1
R413	J707385P821	RES MFLM 1/8W 820R 5%	1
R414	J707385P332	RES MFLM 1/8W 3K3 5%	1
R415	J707385P222	RES MFLM 1/8W 2K2 5%	1
R416	J707385P562	RES MFLM 1/8W 5K6 5%	1
R417	J707385P103	RES MFLM 1/8W 10K 5%	1
R418	J707385P153	RES MFLM 1/8W 15K 5%	1
R419	J707385P182	RES MFLM 1/8W 1K8 5%	1
R420	J707385P182	RES MFLM 1/8W 1K8 5%	1
R421	J707385P182	RES MFLM 1/8W 1K8 5%	1
R422	J707385P473	RES MFLM 1/8W 47K 5%	1
R423	J707385P153	RES MFLM 1/8W 15K 5%	1
R424	J708538P5	RES VAR CERM 10K 20%	1
R425	J707385P272	RES MFLM 1/8W 2K7 5%	1
R426	J707385P563	RES MFLM 1/8W 56K 5%	1
R427	J707385P273	RES MFLM 1/8W 27K 5%	1
R428	J707385P683	RES MFLM 1/8W 68K 5%	1
R429	J707385P104	RES MFLM 1/8W 100K 5%	1

DATE: 11/25/1987

Pos	Code No	Description	Qt
R430	J707385P334	RES MFLM 1/8W 330K 5%	1
R431	J707385P473	RES MFLM 1/8W 47K 5%	1
R432	J707385P473	RES MFLM 1/8W 47K 5%	1
R433	J707385P271	RES MFLM 1/8W 270R 5%	1
R434	J707385P102	RES MFLM 1/8W 1K0 5%	1
R435	J706147P3	RES THERM PTC 250R 25%	1
R436	J707385P392	RES MFLM 1/8W 3K9 5%	1
R437	J707406P7	RES THERM NTC 220R 10%	1
R438	J707385P222	RES MFLM 1/8W 2K2 5%	1
R439	J707385P392	RES MFLM 1/8W 3K9 5%	1
R440	J707385P392	RES MFLM 1/8W 3K9 5%	1
R441	J707385P101	RES MFLM 1/8W 100R 5%	1
R442	J708538P6	RES VAR CERM 20K 20%	1
R444	J707385P473	RES MFLM 1/8W 47K 5%	1
R445	J707385P273	RES MFLM 1/8W 27K 5%	1
R446	J707385P224	RES MFLM 1/8W 220K 5%	1
R447	J707385P392	RES MFLM 1/8W 3K9 5%	1
R448	J707385P101	RES MFLM 1/8W 100R 5%	1
R449	J707385P470	RES MFLM 1/8W 47R 5%	1
R450	J707385P103	RES MFLM 1/8W 10K 5%	1
R452	J707385P332	RES MFLM 1/8W 3K3 5%	1
R501	J707385P821	RES MFLM 1/8W 820R 5%	1
R502	J707385P821	RES MFLM 1/8W 820R 5%	1
R504	J707385P104	RES MFLM 1/8W 100K 5%	1
R505	J707385P104	RES MFLM 1/8W 100K 5%	1
R508	J707385P103	RES MFLM 1/8W 10K 5%	1
R509	J707385P151	RES MFLM 1/8W 150R 5%	1
R510	J707385P103	RES MFLM 1/8W 10K 5%	1
R512	J707385P561	RES MFLM 1/8W 560R 5%	1
R513	J707385P272	RES MFLM 1/8W 2K7 5%	1
R514	J707385P682	RES MFLM 1/8W 6K8 5%	1
R515	J707385P221	RES MFLM 1/8W 220R 5%	1
R516	J707385P221	RES MFLM 1/8W 220R 5%	1
R517	J707385P101	RES MFLM 1/8W 100R 5%	1
R518	J707385P100	RES MFLM 1/8W 10R 5%	1
R529	J707385P392	RES MFLM 1/8W 3K9 5%	1
R602	J707385P122	RES MFLM 1/8W 1K2 5%	1

Pos	Code No	Description	Qt
R603	J707385P122	RES MFLM 1/8W 1K2 5%	1
R605	J707385P104	RES MFLM 1/8W 100K 5%	1
R606	J707385P104	RES MFLM 1/8W 100K 5%	1
R607	J707385P561	RES MFLM 1/8W 560R 5%	1
R608	J707385P682	RES MFLM 1/8W 6K8 5%	1
R609	J707385P332	RES MFLM 1/8W 3K3 5%	1
R610	J707385P331	RES MFLM 1/8W 330R 5%	1
R611	J707385P151	RES MFLM 1/8W 150R 5%	1
R612	J707385P102	RES MFLM 1/8W 1K0 5%	1
R613	J707385P101	RES MFLM 1/8W 100R 5%	1
R614	J707385P272	RES MFLM 1/8W 2K7 5%	1
R615	J707385P682	RES MFLM 1/8W 6K8 5%	1
R616	J707385P181	RES MFLM 1/8W 180R 5%	1
R617	J707385P563	RES MFLM 1/8W 56K 5%	1
R618	J707385P683	RES MFLM 1/8W 68K 5%	1
R619	J707385P104	RES MFLM 1/8W 100K 5%	1
R620	J707385P102	RES MFLM 1/8W 1K0 5%	1
R621	J707385P471	RES MFLM 1/8W 470R 5%	1
R622	J707385P151	RES MFLM 1/8W 150R 5%	1
R623	J707385P224	RES MFLM 1/8W 220K 5%	1
R624	J707385P223	RES MFLM 1/8W 22K 5%	1
R625	J707385P101	RES MFLM 1/8W 100R 5%	1
R626	J707385P100	RES MFLM 1/8W 10R 5%	1
R627	J707385P103	RES MFLM 1/8W 10K 5%	1
R628	J707385P224	RES MFLM 1/8W 220K 5%	1
R629	J707385P124	RES MFLM 1/8W 120K 5%	1
R630	J707385P100	RES MFLM 1/8W 10R 5%	1
R631	J707385P684	RES MFLM 1/8W 680K 5%	1
R632	J707385P223	RES MFLM 1/8W 22K 5%	1
R633	J707385P824	RES MFLM 1/8W 820K 5%	1
R634	J707385P123	RES MFLM 1/8W 12K 5%	1
R635	J707385P102	RES MFLM 1/8W 1K0 5%	1
R636	J707385P332	RES MFLM 1/8W 3K3 5%	1
R637	J707385P181	RES MFLM 1/8W 180R 5%	1
R638	J707385P474	RES MFLM 1/8W 470K 5%	1
R639	J707385P333	RES MFLM 1/8W 33K 5%	1
R640	J707385P105	RES MFLM 1/8W 1M0 10%	1

DATE: 11/25/1987

Pos	Code No	Description	Qt
R641	J707385P184	RES MFLM 1/8W 180K 5%	1
R642	J707385P184	RES MFLM 1/8W 180K 5%	1
R643	J707385P105	RES MFLM 1/8W 1M0 10%	1
R644	J707385P473	RES MFLM 1/8W 47K 5%	1
R645	J707385P153	RES MFLM 1/8W 15K 5%	1
R646	J707385P393	RES MFLM 1/8W 39K 5%	1
R647	J707385P333	RES MFLM 1/8W 33K 5%	1
R649	J707385P473	RES MFLM 1/8W 47K 5%	1
R650	J707385P562	RES MFLM 1/8W 5K6 5%	1
R651	J707385P473	RES MFLM 1/8W 47K 5%	1
R652	J707385P223	RES MFLM 1/8W 22K 5%	1
R653	J707385P823	RES MFLM 1/8W 82K 5%	1
R654	J707385P153	RES MFLM 1/8W 15K 5%	1
R655	J707385P183	RES MFLM 1/8W 18K 5%	1
R656	J707385P393	RES MFLM 1/8W 39K 5%	1
R657	J707385P823	RES MFLM 1/8W 82K 5%	1
R658	J707385P154	RES MFLM 1/8W 150K 5%	1
R659	J707385P223	RES MFLM 1/8W 22K 5%	1
R660	J707385P333	RES MFLM 1/8W 33K 5%	1
R661	J707385P473	RES MFLM 1/8W 47K 5%	1
R662	J707385P473	RES MFLM 1/8W 47K 5%	1
R663	J708538P6	RES VAR CERM 20K 20%	1
R664	J707385P473	RES MFLM 1/8W 47K 5%	1
R665	J707385P824	RES MFLM 1/8W 820K 5%	1
R666	J707385P124	RES MFLM 1/8W 120K 5%	1
R667	J707385P124	RES MFLM 1/8W 120K 5%	1
R668	J707385P122	RES MFLM 1/8W 1K2 5%	1
R669	J707385P221	RES MFLM 1/8W 220R 5%	1
R670	J707385P103	RES MFLM 1/8W 10K 5%	1
R671	J707385P562	RES MFLM 1/8W 5K6 5%	1
R672	J707385P822	RES MFLM 1/8W 8K2 5%	1
R673	J707385P822	RES MFLM 1/8W 8K2 5%	1
R674	J707385P101	RES MFLM 1/8W 100R 5%	1
R675	J708538P5	RES VAR CERM 10K 20%	1
R676	J707385P562	RES MFLM 1/8W 5K6 5%	1
R677	J708538P5	RES VAR CERM 10K 20%	1
R678	J707385P470	RES MFLM 1/8W 47R 5%	1

Pos	Code No	Description	Qt
R679	J707385P821	RES MFLM 1/8W 820R 5%	1
R680	J708538P6	RES VAR CERM 20K 20%	1
R681	J707385P223	RES MFLM 1/8W 22K 5%	1
R682	J707385P223	RES MFLM 1/8W 22K 5%	1
R683	J707385P223	RES MFLM 1/8W 22K 5%	1
R684	J707385P183	RES MFLM 1/8W 18K 5%	1
R685	J707385P183	RES MFLM 1/8W 18K 5%	1
R686	J707385P103	RES MFLM 1/8W 10K 5%	1
R687	J707385P103	RES MFLM 1/8W 10K 5%	1
R689	J707385P105	RES MFLM 1/8W 1M0 10%	1
R690	J707385P124	RES MFLM 1/8W 120K 5%	1
R691	J707385P273	RES MFLM 1/8W 27K 5%	1
R692	J707385P223	RES MFLM 1/8W 22K 5%	1
R693	J707385P105	RES MFLM 1/8W 1M0 10%	1
R694	J707385P223	RES MFLM 1/8W 22K 5%	1
R695	J707385P105	RES MFLM 1/8W 1M0 10%	1
R696	J707385P223	RES MFLM 1/8W 22K 5%	1
R697	J707385P105	RES MFLM 1/8W 1M0 10%	1
R698	J707385P103	RES MFLM 1/8W 10K 5%	1
R699	J707385P392	RES MFLM 1/8W 3K9 5%	1
R702	A701250P413	RES MFILM 133K 1% 1/4W	1
R703	A701250P213	RES MFILM 1K33 1% 1/4W	1
R704	A701250P326	RES MFILM 18K2 1% 1/4W	1
R707	J707385P104	RES MFLM 1/8W 100K 5%	1
R708	J707385P105	RES MFLM 1/8W 1M0 10%	1
R709	J707385P181	RES MFLM 1/8W 180R 5%	1
R710	J707385P101	RES MFLM 1/8W 100R 5%	1
R711	J707385P223	RES MFLM 1/8W 22K 5%	1
R712	J707385P154	RES MFLM 1/8W 150K 5%	1
R713	J707385P821	RES MFLM 1/8W 820R 5%	1
R714	J707385P104	RES MFLM 1/8W 100K 5%	1
R715	J707385P563	RES MFLM 1/8W 56K 5%	1
U100	J708165P2	IC LIN OP-AMP 324	1
U201	J708333P1	IC LIN VR FIX 4785	1
U401	J707449P1	IC LIN IF-AMP 3357	1
U402	M905766G1	INT CKT SQ 4002 G1/G2/G5/G4	1
U402	M905766G2	INT CKT SQ 4003 G6/G3	1

DATE: 11/25/1987

Pos	Code No	Description	Qt
U601	J707859P1	IC LIN OP-AMP 204	1
U602	J707859P1	IC LIN OP-AMP 204	1
U604	J707859P1	IC LIN OP-AMP 204	1
U606	J707243P1	IC DIG REG 4094	1
U607	J707374P1	IC PLL PRESC 8793	1
U608	B800902P1	IC PLL SYN CUSTOM DES	1
U609	J707859P1	IC LIN OP-AMP 204	1
U610	J708503P2	IC LIN CMPAR LM 339	1
U615	J708621P2	CPLR OPTO PC 827	1
U616	J708503P2	IC LIN CMPAR LM 339	1
W003	J707256P1	COIL FIX	1
W004	J707256P1	COIL FIX	1
W005	J708717P1	STRAP	1
W006	J708716P1	STRAP	1
Y401	J707309P1	CRYSTAL UNIT 20.945OMHZ	1
Y701	J707567P18	CRYSTAL UNIT 7.375OMHZ	1
Z401	J707310P1	FLTR CRY 21.4 +/-7.5OKHZ G1/G4	1
Z401	J707310P2	FLTR CRY 21.4 +/-7.5OKHZ G2/G5	1
Z401	J707310P3	FLTR CRY 21.4 +/-3.75KHZ G3/G6	1
Z402	J707446P1	FLTR CER 455K +/-10KHZ G1/G4	1
Z402	J707446P3	FLTR CER 455K +/-7.5KHZ G2/G5	1
Z402	J707446P4	FLTR CER 455K +/-4.5KHZ G3/G6	1
Z403	J707446P1	FLTR CER 455K +/-10KHZ G1/G4	1
Z403	J707446P3	FLTR CER 455K +/-7.5KHZ G2/G5	1
Z403	J707446P4	FLTR CER 455K +/-4.5KHZ G3/G6	1
	M905893P1R2	BD PW	1
		NON ELECTRONICAL PARTS	
	J707256P4	COIL FIX	3
	K805776P1	CASTING HEAT SINK	1
	K805569G2	SHIELD METALLIZED	1
	J706281P7	CORE SCREW FERR U 25	8
	J706804P2	WASH INS CRYS FOR HC-18/U	4

Pos	Code No	Description	Qt

DATE: 9/23/1987

Pos	Code No	Description	Qt
C100	J707809P13	CAP CER NPO 10P 5%	1
C101	J707438P4	CAP CER CL2 680P 10%	1
C102	J707438P7	CAP CER CL2 2N2 10%	1
C103	J707436P65	CAP CER NPO 150P 5%	1
C104	J707809P15	CAP CER NPO 15P 5%	1
C105	J707809P17	CAP CER NPO 22P 5%	1
C106	J707809P15	CAP CER NPO 15P 5%	1
C107	J707438P7	CAP CER CL2 2N2 10%	1
C108	J707438P7	CAP CER CL2 2N2 10%	1
C109	J707809P25	CAP CER NPO 100P 5%	1
C110	J707809P23	CAP CER NPO 68P 5% G1/G2/G3	1
C110	J707809P17	CAP CER NPO 22P 5% G4/G5/G6	1
C111	J707438P7	CAP CER CL2 2N2 10%	1
C112	J707438P14	CAP CER CL2 10N 10%	1
C113	J707438P7	CAP CER CL2 2N2 10%	1
C114	J707438P7	CAP CER CL2 2N2 10%	1
C115	J707809P27	CAP CER NPO 150P 5% G1/G2/G3	1
C115	J707809P23	CAP CER NPO 68P 5% G4/G5/G6	1
C116	J707809P27	CAP CER NPO 150P 5% G1/G2/G3	1
C116	J707809P24	CAP CER NPO 82P 5% G4/G5/G6	1
C120	J707353P6	CAP ELECT 4U7 25V	1
C121	J707438P14	CAP CER CL2 10N 10%	1
C122	J707438P7	CAP CER CL2 2N2 10%	1
C123	J707438P14	CAP CER CL2 10N 10%	1
C124	J707438P7	CAP CER CL2 2N2 10%	1
C125	A700006P40	CAP MICA 170P 5% G1/G2/G3	1
C125	A700006P38	CAP MICA 150P 5% G4/G5/G6	1
C126	J709524P59	CAP CER RF 270P 5% G1/G2/G3	1
C126	J709524P49	CAP CER RF 100P 5% G4/G5/G6	1
C127	J709524P51	CAP CER RF 120P 5% G1/G2/G3	1
C127	J709524P45	CAP CER RF 68P 5% G4/G5/G6	1
C128	A700006P35	CAP MICA 110P 5% G1/G2/G3	1
C128	A700006P26	CAP MICA 47P 5% G4/G5/G6	1
C130	J707809P14	CAP CER NPO 12P 5%	1
C131	J707809P9	CAP CER NPO 4P7 .25P	1
C132	J707809P12	CAP CER NPO 8P2 .25P	1
C133	J707809P12	CAP CER NPO 8P2 .25P	1

Pos	Code No	Description	Qt
C134	J707353P6	CAP ELECT 4U7 25V	1
C136	J707438P20	CAP CER CL2 33N 10%	1
C137	J707438P7	CAP CER CL2 2N2 10%	1
C138	J707438P7	CAP CER CL2 2N2 10%	1
C139	J707438P7	CAP CER CL2 2N2 10%	1
C140	J707438P7	CAP CER CL2 2N2 10%	1
C141	J707438P7	CAP CER CL2 2N2 10%	1
C142	A700006P14	CAP MICA 18P 5%	1
C143	A700006P26	CAP MICA 47P 5%	1
C144	A700006P26	CAP MICA 47P 5%	1
C145	A700006P18	CAP MICA 24P 5%	1
C146	J707438P7	CAP CER CL2 2N2 10%	1
C147	J707438P7	CAP CER CL2 2N2 10%	1
C148	J707438P7	CAP CER CL2 2N2 10%	1
C149	J707438P7	CAP CER CL2 2N2 10%	1
C150	J707809P10	CAP CER NPO 5P6 .25P G1/G2/G3	1
C150	J707809P12	CAP CER NPO 5P6 .25P G4/G5/G6	1
C151	J707809P10	CAP CER NPO 5P6 .25P G1/G2/G3	1
C151	J707809P12	CAP CER NPO 5P6 .25P G4/G5/G6	1
C152	J707438P7	CAP CER CL2 2N2 10%	1
C153	J707438P7	CAP CER CL2 2N2 10%	1
C154	J707438P7	CAP CER CL2 2N2 10%	1
C155	J707438P7	CAP CER CL2 2N2 10%	1
C156	J707353P3	CAP ELECT 0U47 50V	1
C157	J707438P7	CAP CER CL2 2N2 10%	1
C158	J707438P7	CAP CER CL2 2N2 10%	1
C159	J707438P14	CAP CER CL2 10N 10%	1
C160	J707436P77	CAP CER NPO 470P 5%	1
C161	J707438P7	CAP CER CL2 2N2 10%	1
C162	J707438P14	CAP CER CL2 10N 10%	1
C163	J707438P20	CAP CER CL2 33N 10%	1
C164	J707438P7	CAP CER CL2 2N2 10%	1
C165	J707809P16	CAP CER NPO 18P 5% G1/G2/G3	1
C165	J707809P17	CAP CER NPO 22P 5% G4/G5/G6	1
C166	J707438P5	CAP CER CL2 1N 10%	1
C167	J707412P13	CAP PYES 470N 10%	1
C168	J707438P7	CAP CER CL2 2N2 10%	1

DATE: 9/23/1987

Pos	Code No	Description	Qt
C169	J707809P1	CAP CER NPO 1P0 .25P	1
C170	J707438P14	CAP CER CL2 10N 10%	1
C171	J707438P14	CAP CER CL2 10N 10%	1
C172	J707438P14	CAP CER CL2 10N 10%	1
C201	J707438P26	CAP CER CL2 100N 10%	1
C202	J707444P8	CAP TA SOL 22U 16V	1
C203	J706005P12	CAP ELECT 47U 40V	1
C204	J707438P7	CAP CER CL2 2N2 10%	1
C205	J707412P9	CAP PYES 100N 10%	1
C206	J707444P4	CAP TA SOL 1U 35V	1
C301	J707436P69	CAP CER NPO 220P 5%	1
C302	J707438P5	CAP CER CL2 1N 10%	1
C304	J707436P10	CAP CER NPO 5P6 .25P	1
C305	J707436P33	CAP CER NPO 27P 5%	1
C306	J707483P4	CAP PHEN 0P56 5%	1
C307	J707438P5	CAP CER CL2 1N 10%	1
C309	J707436P33	CAP CER NPO 27P 5%	1
C310	J707438P5	CAP CER CL2 1N 10%	1
C311	J707436P10	CAP CER NPO 5P6 .25P	1
C312	J707436P87	CAP CER NPO 1N2 5%	1
C315	J707436P10	CAP CER NPO 5P6 .25P	1
C317	J707444P2	CAP TA SOL 0U22 35V	1
C318	J707438P5	CAP CER CL2 1N 10%	1
C319	J707436P33	CAP CER NPO 27P 5%	1
C320	J707438P5	CAP CER CL2 1N 10%	1
C322	J707483P7	CAP PHEN 1P00 5%	1
C323	J707483P6	CAP PHEN 0P82 5%	1
C324	J707436P7	CAP CER NPO 3P3 .25P	1
C325	J707438P5	CAP CER CL2 1N 10%	1
C326	J707436P33	CAP CER NPO 27P 5%	1
C328	J707436P33	CAP CER NPO 27P 5%	1
C331	J707483P6	CAP PHEN 0P82 5%	1
C332	J707436P33	CAP CER NPO 27P 5%	1
C333	J707436P7	CAP CER NPO 3P3 .25P	1
C334	J707436P8	CAP CER NPO 3P9 .25P	1
C335	J707438P5	CAP CER CL2 1N 10%	1
C338	J707436P37	CAP CER NPO 33P 5%	1

Pos	Code No	Description	Qt
C339	J707438P5	CAP CER CL2 1N 10%	1
C340	J707438P8	CAP CER CL2 3N3 10%	1
C345	J707438P5	CAP CER CL2 1N 10%	1
C347	J707438P5	CAP CER CL2 1N 10%	1
C348	J707438P5	CAP CER CL2 1N 10%	1
C350	J707436P10	CAP CER NPO 5P6 .25P	1
C351	J707436P25	CAP CER NPO 18P 5%	1
C353	J707483P8	CAP PHEN 1P20 5%	1
C354	J707436P25	CAP CER NPO 18P 5%	1
C355	J707436P9	CAP CER NPO 4P7 .25P	1
C356	J707438P5	CAP CER CL2 1N 10%	1
C357	J707436P1	CAP CER NPO 1P0 .25P	1
C358	J707436P1	CAP CER NPO 1P0 .25P	1
C359	J707438P5	CAP CER CL2 1N 10%	1
C401	J707438P8	CAP CER CL2 3N3 10%	1
C402	J707438P8	CAP CER CL2 3N3 10%	1
C403	J707438P8	CAP CER CL2 3N3 10%	1
C404	J707436P37	CAP CER NPO 33P 5%	1
C405	J707438P26	CAP CER CL2 100N 10%	1
C406	J707436P10	CAP CER NPO 5P6 .25P	1
C407	J707436P33	CAP CER NPO 27P 5%	1
C408	J707438P5	CAP CER CL2 1N 10%	1
C409	J707438P8	CAP CER CL2 3N3 10%	1
C410	J707444P8	CAP TA SOL 22U 16V	1
C411	J707438P26	CAP CER CL2 100N 10%	1
C412	J707438P26	CAP CER CL2 100N 10%	1
C413	J707436P37	CAP CER NPO 33P 5%	1
C414	J707438P8	CAP CER CL2 3N3 10%	1
C415	J707436P69	CAP CER NPO 220P 5%	1
C416	J707436P61	CAP CER NPO 100P 5%	1
C417	J707436P33	CAP CER NPO 27P 5%	1
C418	J707438P14	CAP CER CL2 10N 10%	1
C419	J707438P26	CAP CER CL2 100N 10%	1
C420	J707438P14	CAP CER CL2 10N 10%	1
C421	J707438P26	CAP CER CL2 100N 10%	1
C422	J707438P26	CAP CER CL2 100N 10%	1
C423	J707436P13	CAP CER NPO 10P 5%	1

Pos	Code No	Description	Qt
C424	J707438P8	CAP CER CL2 3N3 10%	1
C425	J707412P13	CAP PYES 470N 10%	1
C426	J707436P93	CAP CER NPO 2N2 5%	1
C427	J707436P73	CAP CER NPO 330P 5%	1
C428	J707436P73	CAP CER NPO 330P 5%	1
C429	J707438P14	CAP CER CL2 10N 10%	1
C430	J707444P8	CAP TA SOL 22U 16V	1
C431	J707444P8	CAP TA SOL 22U 16V	1
C432	J707438P26	CAP CER CL2 100N 10%	1
C433	J707438P26	CAP CER CL2 100N 10%	1
C434	J707438P8	CAP CER CL2 3N3 10%	1
C435	J707436P1	CAP CER NPO 1P0 .25P	1
C436	J707438P26	CAP CER CL2 100N 10%	1
C437	J707436P45	CAP CER NPO 47P 5%	1
C438	J707438P14	CAP CER CL2 10N 10%	1
C501	J707412P11	CAP PYES 220N 10%	1
C502	J707412P11	CAP PYES 220N 10%	1
C504	A700235P16	CAP CER N150 18P 5%	1
C505	A700235P11	CAP CER N150 6P8 .25P	1
C506	A700235P20	CAP CER N150 39P 5%	1
C507	A700235P19	CAP CER N150 33P 5%	1
C508	A700235P25	CAP CER N150 100P 5%	1
C509	J707436P6	CAP CER NPO 2P7 .25P	1
C512	J707436P5	CAP CER NPO 2P2 .25P	1
C513	J707438P2	CAP CER CL2 330P 10%	1
C514	J707438P6	CAP CER CL2 1N5 10%	1
C517	J707444P6	CAP TA SOL 4U7 35V	1
C518	J707436P2	CAP CER NPO 1P2 .25P	1
C519	J707438P6	CAP CER CL2 1N5 10%	1
C520	J707436P69	CAP CER NPO 220P 5%	1
C521	J707436P29	CAP CER NPO 22P 5%	1
C522	J707438P6	CAP CER CL2 1N5 10%	1
C523	J707436P5	CAP CER NPO 2P2 .25P	1
C524	J707438P3	CAP CER CL2 470P 10%	1
C525	J707438P3	CAP CER CL2 470P 10%	1
C527	J707438P3	CAP CER CL2 470P 10%	1
C528	J707438P26	CAP CER CL2 100N 10%	1

Pos	Code No	Description	Qt
C540	J707438P3	CAP CER CL2 470P 10%	1
C541	J707438P3	CAP CER CL2 470P 10%	1
C543	J707438P3	CAP CER CL2 470P 10%	1
C544	J707438P3	CAP CER CL2 470P 10%	1
C545	J707436P61	CAP CER NPO 100P 5%	1
C601	J707412P11	CAP PYES 220N 10%	1
C602	J707412P11	CAP PYES 220N 10%	1
C603	J707438P26	CAP CER CL2 100N 10%	1
C604	A700235P13	CAP CER N150 10P 5%	1
C605	A700235P10	CAP CER N150 5P6 .25P	1
C606	A700235P38	CAP CER N150 16P 5%	1
C607	A700235P11	CAP CER N150 6P8 .25P	1
C608	A700233P9	CAP CER CL2 2N2 20%	1
C610	J707436P61	CAP CER NPO 100P 5%	1
C611	J707436P6	CAP CER NPO 2P7 .25P	1
C612	J707438P6	CAP CER CL2 1N5 10%	1
C613	J707444P6	CAP TA SOL 4U7 35V	1
C614	J707438P6	CAP CER CL2 1N5 10%	1
C615	J707438P10	CAP CER CL2 4N7 10%	1
C616	J707438P4	CAP CER CL2 680P 10%	1
C617	J707436P49	CAP CER NPO 56P 5%	1
C618	J707436P1	CAP CER NPO 1P0 .25P	1
C619	J707438P6	CAP CER CL2 1N5 10%	1
C620	J707436P61	CAP CER NPO 100P 5%	1
C621	J707436P21	CAP CER NPO 15P 5%	1
C622	J707436P5	CAP CER NPO 2P2 .25P	1
C623	J707438P26	CAP CER CL2 100N 10%	1
C624	J707436P61	CAP CER NPO 100P 5%	1
C625	J707438P6	CAP CER CL2 1N5 10%	1
C626	J707438P5	CAP CER CL2 1N 10%	1
C627	J707438P26	CAP CER CL2 100N 10%	1
C628	J707436P3	CAP CER NPO 1P5 .25P	1
C629	J707436P65	CAP CER NPO 150P 5%	1
C630	J707438P26	CAP CER CL2 100N 10%	1
C631	J707438P6	CAP CER CL2 1N5 10%	1
C632	J707444P6	CAP TA SOL 4U7 35V	1
C633	J707444P17	CAP TA SOL 47U 10V	1

DATE: 9/23/1987

Pos	Code No	Description	Qt
C634	J707438P26	CAP CER CL2 100N 10%	1
C635	J707438P1	CAP CER CL2 220P 10%	1
C636	J707444P17	CAP TA SOL 47U 10V	1
C637	J707438P26	CAP CER CL2 100N 10%	1
C638	J707438P5	CAP CER CL2 1N 10%	1
C639	J707438P8	CAP CER CL2 3N3 10%	1
C640	J707412P8	CAP PYES 68N 10%	1
C641	J707412P13	CAP PYES 470N 10%	1
C642	J707412P13	CAP PYES 470N 10%	1
C643	J707438P26	CAP CER CL2 100N 10%	1
C644	J707436P6	CAP CER NPO 2P7 .25P	1
C645	J707436P25	CAP CER NPO 18P 5%	1
C646	J707436P63	CAP CER NPO 120P 5%	1
C647	J707436P13	CAP CER NPO 10P 5%	1
C652	J707438P22	CAP CER CL2 47N 10%	1
C653	J707444P6	CAP TA SOL 4U7 35V	1
C656	J707438P3	CAP CER CL2 470P 10%	1
C657	J707438P3	CAP CER CL2 470P 10%	1
C659	J707438P5	CAP CER CL2 1N 10%	1
C660	J707438P14	CAP CER CL2 10N 10%	1
C666	J707438P3	CAP CER CL2 470P 10%	1
C667	J707438P3	CAP CER CL2 470P 10%	1
C701	J707436P29	CAP CER NPO 22P 5%	1
C702	J708702P22	CAP CER N750 56P 5%	1
C703	J707436P69	CAP CER NPO 220P 5%	1
C705	J707438P5	CAP CER CL2 1N 10%	1
C706	J707438P14	CAP CER CL2 10N 10%	1
C707	J707436P10	CAP CER NPO 5P6 .25P	1
C708	J707438P14	CAP CER CL2 10N 10%	1
C709	J707438P14	CAP CER CL2 10N 10%	1
D100	A700047P3	DIO SI SIG 1N6263	1
D101	J706892P1	DIO SI PIN UM 9401	1
D102	J706892P1	DIO SI PIN UM 9401	1
D103	J707390P1	DIO SI SIG BAV 74	1
D300	J707928P2	DIO SI CAP BB 809	1
D301	J707928P2	DIO SI CAP BB 809	1
D302	J707928P2	DIO SI CAP BB 809	1

Pos	Code No	Description	Qt
D303	J707928P2	DIO SI CAP BB 809	1
D304	J707928P2	DIO SI CAP BB 809	1
D305	J707928P2	DIO SI CAP BB 809	1
D306	J707928P2	DIO SI CAP BB 809	1
D307	J707928P2	DIO SI CAP BB 809	1
D401	A700025P8	DIO SI ZENR 6V8 5% 0.4W	1
D501	J707928P2	DIO SI CAP BB 809	1
D502	J707928P2	DIO SI CAP BB 809	1
D503	J707928P2	DIO SI CAP BB 809	1
D504	J707928P2	DIO SI CAP BB 809	1
D505	J707928P2	DIO SI CAP BB 809	1
D506	J707397P1	DIO SI CAP BBY 40	1
D601	J707928P2	DIO SI CAP BB 809	1
D602	J707928P2	DIO SI CAP BB 809	1
D603	J709536P1	DIO SI CAP MV 2111	1
D604	J709536P1	DIO SI CAP MV 2111	1
D605	J707389P1	DIO SI SIG BAV 99	1
D606	J708681P1	DIO SI SIG BAW 56	1
D607	J707390P1	DIO SI SIG BAV 74	1
D608	J707390P1	DIO SI SIG BAV 74	1
D610	J708681P1	DIO SI SIG BAW 56	1
D701	A700073P1	DIO SI CAP BB 409	1
D702	J707390P1	DIO SI SIG BAV 74	1
L100	K805653G9	COIL ASM 9 1/2T	1
L101	A700024P7	COIL RF FIX 0.33UH 10%	1
L102	A700024P3	COIL RF FIX 0.15UH 10%	1
L103	A700024P12	COIL RF FIX 0.82UH 10%	1
L104	K805653G2	COIL ASM 2 1/2T	1
L105	K805653G5	COIL ASM 5 1/2T G1/G2/G3	1
L105	K805653G8	COIL ASM 8 1/2T G4/G5/G6	1
L106	J707339G1	COIL FIX ASM	1
L107	K805653G4	COIL ASM 4 1/2T	1
L108	A700024P3	COIL RF FIX 0.15UH 10%	1
L109	J707256P2	COIL FIX	1
L110	J709287P1	CORE TOR FERR	1
L111	J707256P1	COIL FIX G1/G2/G3	1
L111	J707256G1	COIL ASM 1 1/2T G4/G5/G6	1

DATE: 9/23/1987

Pos	Code No	Description	Qt
L113	A700024P3	COIL RF FIX 0.15UH 10%	1
L114	J709287P1	CORE TOR FERR	1
L115	J707256P2	COIL FIX	1
L116	J709287P1	CORE TOR FERR	1
L117	J709603P2	COIL G1/G2/G3	1
L117	J709603P6	COIL ASM 1 1/2T G4/G5/G6	1
L118	J709603P1	COIL G1/G2/G3	1
L118	J709603P6	COIL FIX G4/G5/G6	1
L121	A700024P18	COIL RF FIX 2.7UH 10%	1
L122	A700024P25	COIL RF FIX 10UH 10%	1
L123	A700024P25	COIL RF FIX 10UH 10%	1
L124	K805653G7	COIL ASM 7 1/2 T	1
L125	K805653G7	COIL ASM 7 1/2 T	1
L126	K805653G9	COIL ASM 9 1/2T	1
L127	A700024P25	COIL RF FIX 10UH 10%	1
L128	A700024P25	COIL RF FIX 10UH 10%	1
L301	J709099P8	COIL RF VAR 7-1/2T	1
L302	J709099P15	COIL RF VAR 7-1/2T TAP	1
L303	J707486P11	COIL RF FIX 2.2UH 10%	1
L304	J709099P8	COIL RF VAR 7-1/2T	1
L305	J707486P2	COIL RF FIX 3.3UH 10%	1
L306	J709099P8	COIL RF VAR 7-1/2T	1
L308	J709099P8	COIL RF VAR 7-1/2T	1
L310	J709099P9	COIL RF VAR 7-1/2T TAP	1
L312	J708428P1	COIL RF VAR 45 MHZ	1
L313	J709099P12	COIL RF VAR 5-1/2T TAP	1
L314	J709099P14	COIL RF VAR 5-1/2T TAP	1
L401	J707486P3	COIL RF FIX 6.8UH 10%	1
L403	K805570G6	COIL AS M	1
L405	J708428P1	COIL RF VAR 45 MHZ	1
L406	K805570G5	COIL ASM	1
L407	A700024P25	COIL RF FIX 10UH 10%	1
L408	J708428P1	COIL RF VAR 45 MHZ	1
L409	J707431P1	COIL RF VAR 455KHZ 25%	1
L410	J707431P1	COIL RF VAR 455KHZ 25%	1
L501	A700024P21	COIL RF FIX 4.7UH 10%	1
L502	A700024P21	COIL RF FIX 4.7UH 10%	1

Pos	Code No	Description	Qt
L504	A700024P21	COIL RF FIX 4.7UH 10%	1
L505	L855671P2	COIL RADIO FREQUENCY	1
L506	A700024P21	COIL RF FIX 4.7UH 10%	1
L508	A700024P5	COIL RF FIX 0.22UH 10%	1
L601	A700024P21	COIL RF FIX 4.7UH 10%	1
L602	A700024P21	COIL RF FIX 4.7UH 10%	1
L604	A700024P21	COIL RF FIX 4.7UH 10%	1
L605	L855671P2	COIL RA DIO FREQUENCY	1
L606	A700024P21	COIL RF FIX 4.7UH 10%	1
L607	A700024P4	COIL RF FIX 0.18UH 10%	1
L608	A700024P5	COIL RF FIX 0.22UH 10%	1
L701	K805570G7	COIL ASM	1
L702	A700024P43	COIL RF FIX 330UH 10%	1
L703	A700024P27	COIL RF FIX 15UH 10%	1
P102	J707064P112	CONN PWB FEM 12-CKT	1
P105	A701883P4	CONN PWB FEM RECP	1
Q100	J707388P1	TSTR NPN SI BFR 53	1
Q101	A701940P1	TSTR NPN SI RF-PWR 0.4W	1
Q102	J709517P1	TSTR NPN SI RF-PWR 3W	1
Q103	J709162P1	TSTR NPN SI RF-PWR 27W G1/G2/G3	1
Q103	J709163P1	TSTR NPN SI RF-PWR 10W G4/G5/G6	1
Q106	J707432P1	TSTR PNP SI BCX 18	1
Q107	J707386P1	TSTR NPN SI BCW 32	1
Q108	J708406P1	TSTR NPN SI BD 233	1
Q109	J707386P1	TSTR NPN SI BCW 32	1
Q201	J707435P1	TSTR PNP SI BC 369	1
Q202	J707386P1	TSTR NPN SI BCW 32	1
Q203	J707432P1	TSTR PNP SI BCX 18	1
Q204	J707386P1	TSTR NPN SI BCW 32	1
Q301	J706011P2	TSTR NPN SI BFR 91A	1
Q302	J707817P1	TSTR JFET SI J 309	1
Q401	J707817P1	TSTR JFET SI J 309	1
Q402	J707817P1	TSTR JFET SI J 309	1
Q403	J707419P1	TSTR JFET SI BF511	1
Q404	J708418P1	TSTR NPN SI BFS 20	1
Q405	J708418P1	TSTR NPN SI BFS 20	1
R121	J707385P333	RES MFLM 1/8W 33K 5%	1

DATE: 9/23/1987

Pos	Code No	Description	Qt
Q407	J707386P1	TSTR NPN SI BCW 32	1
Q408	J707387P1	TSTR PNP SI BCW 30	1
Q501	J707817P1	TSTR JFET SI J 309	1
Q502	J708318P1	TSTR PNP SI BFT 92	1
Q601	J707817P1	TSTR JFET SI J 309	1
Q603	J708318P1	TSTR PNP SI BFT 92	1
Q604	J707433P1	TSTR MFET SI BF 989	1
Q605	J707386P1	TSTR NPN SI BCW 32	1
Q612	J707386P1	TSTR NPN SI BCW 32	1
Q613	J707386P1	TSTR NPN SI BCW 32	1
Q701	J707419P1	TSTR JFET SI BF511	1
Q702	J707387P1	TSTR PNP SI BCW 30	1
R000	J707385P332	RES MFLM 1/8W 3K3 5% G4/G5/G6	1
R100	J707385P101	RES MFLM 1/8W 100R 5%	1
R101	J707385P470	RES MFLM 1/8W 47R 5%	1
R102	J707385P471	RES MFLM 1/8W 470R 5%	1
R103	J707385P390	RES MFLM 1/8W 39R 5%	1
R104	J707385P331	RES MFLM 1/8W 330R 5%	1
R105	J707385P122	RES MFLM 1/8W 1K2 5%	1
R106	J707385P100	RES MFLM 1/8W 10R 5%	1
R107	J707385P100	RES MFLM 1/8W 10R 5%	1
R108	J707385P560	RES MFLM 1/8W 56R 5%	1
R109	J707385P100	RES MFLM 1/8W 10R 5%	1
R110	J707385P100	RES MFLM 1/8W 10R 5% G1/G2/G3	1
R110	J707385P910	RES MFLM 1/8W 1R0 20% G4/G5/G6	1
R111	J707385P220	RES MFLM 1/8W 22R 5%	1
R112	J707385P947	RES MFLM 1/8W 4R7 20%	1
R113	J707385P100	RES MFLM 1/8W 10R 5%	1
R114	J707385P910	RES MFLM 1/8W 1R0 20% G1/G2/G3	1
R114	J707385P918	RES MFLM 1/8W 1R8 20% G4/G5/G6	1
R115	J707385P910	RES MFLM 1/8W 1R0 20% G1/G2/G3	1
R115	J707385P918	RES MFLM 1/8W 1R8 20% G4/G5/G6	1
R116	J707385P121	RES MFLM 1/8W 120R 5%	1
R117	J707385P220	RES MFLM 1/8W 22R 5%	1
R118	J707385P473	RES MFLM 1/8W 47K 5%	1
R119	J707385P820	RES MFLM 1/8W 82R 5%	1
R120	J707385P820	RES MFLM 1/8W 82R 5%	1

Pos	Code No	Description	Qt
R121	J707385P333	RES MFILM 1/8W 33K 5%	1
R122	J707385P221	RES MFLM 1/8W 220R 5%	1
R123	J707385P221	RES MFLM 1/8W 220R 5%	1
R124	J707385P101	RES MFLM 1/8W 100R 5% G1/G2/G3	1
R124	J707385P221	RES MFLM 1/8W 220R 5% G4/G5/G6	1
R125	J707385P330	RES MFLM 1/8W 33R 5%	1
R126	J707385P330	RES MFLM 1/8W 33R 5%	1
R127	J707385P330	RES MFLM 1/8W 33R 5%	1
R128	J707385P100	RES MFLM 1/8W 10R 5%	1
R129	J707385P121	RES MFLM 1/8W 120R 5% G1/G2/G3	1
R129	J707385P560	RES MFLM 1/8W 56R 5% G4/G5/G6	1
R130	J707385P121	RES MFLM 1/8W 120R 5% G1/G2/G3	1
R130	J707385P560	RES MFLM 1/8W 56R 5% G4/G5/G6	1
R131	J707385P392	RES MFLM 1/8W 3K9 5%	1
R132	J708538P9	RES VAR CERM 200K 20%	1
R133	J708538P4	RES VAR CERM 5K0 20%	1
R134	J707385P100	RES MFLM 1/8W 10R 5%	1
R135	J706147P2	RES THERM PTC 80R 25%	1
R136	J707385P682	RES MFLM 1/8W 6K8 5%	1
R137	J707385P223	RES MFLM 1/8W 22K 5%	1
R138	J707385P472	RES MFLM 1/8W 4K7 5%	1
R139	J707385P472	RES MFLM 1/8W 4K7 5%	1
R140	J707385P333	RES MFLM 1/8W 33K 5%	1
R141	J707385P333	RES MFLM 1/8W 33K 5%	1
R142	J707385P104	RES MFLM 1/8W 100K 5%	1
R143	J707385P222	RES MFLM 1/8W 2K2 5%	1
R144	J707385P222	RES MFLM 1/8W 2K2 5%	1
R145	J707385P223	RES MFLM 1/8W 22K 5%	1
R146	J707385P104	RES MFLM 1/8W 100K 5%	1
R147	J707385P104	RES MFLM 1/8W 100K 5%	1
R148	J707385P123	RES MFLM 1/8W 12K 5%	1
R149	J707385P472	RES MFLM 1/8W 4K7 5%	1
R150	J707385P102	RES MFLM 1/8W 1K0 5%	1
R151	J707385P683	RES MFLM 1/8W 68K 5%	1
R152	J707385P104	RES MFLM 1/8W 100K 5%	1
R153	J707385P472	RES MFLM 1/8W 4K7 5%	1
R154	J707385P274	RES MFLM 1/8W 270K 5%	1

DATE: 9/23/1987

Pos	Code No	Description	Qt
R155	J707385P682	RES MFLM 1/8W 6K8 5%	1
R156	J707385P102	RES MFLM 1/8W 1K0 5%	1
R157	J707385P100	RES MFLM 1/8W 10R 5%	1
R158	J707385P102	RES MFLM 1/8W 1K0 5%	1
R159	J707385P472	RES MFLM 1/8W 4K7 5%	1
R160	J707385P104	RES MFLM 1/8W 100K 5%	1
R161	J709725P1	RES THERM PTC 1K0	1
R162	J707385P220	RES MFLM 1/8W 22R 5%	1
R201	J707385P561	RES MFLM 1/8W 560R 5%	1
R202	J707385P271	RES MFLM 1/8W 270R 5%	1
R203	J707385P153	RES MFLM 1/8W 15K 5%	1
R204	J707385P153	RES MFLM 1/8W 15K 5%	1
R205	J707385P472	RES MFLM 1/8W 4K7 5%	1
R206	J707385P272	RES MFLM 1/8W 2K7 5%	1
R207	J707385P563	RES MFLM 1/8W 56K 5%	1
R208	J707385P563	RES MFLM 1/8W 56K 5%	1
R209	J707385P271	RES MFLM 1/8W 270R 5%	1
R210	J707385P331	RES MFLM 1/8W 330R 5%	1
R301	J707385P331	RES MFLM 1/8W 330R 5%	1
R302	J707385P392	RES MFLM 1/8W 3K9 5%	1
R303	J707385P104	RES MFLM 1/8W 100K 5%	1
R304	J707385P104	RES MFLM 1/8W 100K 5%	1
R306	J707385P272	RES MFLM 1/8W 2K7 5%	1
R307	J707385P681	RES MFLM 1/8W 680R 5%	1
R308	J707385P470	RES MFLM 1/8W 47R 5%	1
R309	J707385P270	RES MFLM 1/8W 27R 5%	1
R310	J707385P104	RES MFLM 1/8W 100K 5%	1
R311	J707385P101	RES MFLM 1/8W 100R 5%	1
R312	J707385P104	RES MFLM 1/8W 100K 5%	1
R313	J707385P123	RES MFLM 1/8W 12K 5%	1
R314	J707385P104	RES MFLM 1/8W 100K 5%	1
R315	J707385P822	RES MFLM 1/8W 8K2 5%	1
R316	J707385P104	RES MFLM 1/8W 100K 5%	1
R317	J707385P471	RES MFLM 1/8W 470R 5%	1
R318	J707385P100	RES MFLM 1/8W 10R 5%	1
R319	J707385P101	RES MFLM 1/8W 100R 5%	1
R320	J707385P222	RES MFLM 1/8W 2K2 5%	1

Pos	Code No	Description	Qt
R321	J707385P270	RES MFLM 1/8W 27R 5%	1
R322	J707385P471	RES MFLM 1/8W 470R 5%	1
R323	J707385P104	RES MFLM 1/8W 100K 5%	1
R324	J707385P104	RES MFLM 1/8W 100K 5%	1
R325	J707385P100	RES MFLM 1/8W 10R 5%	1
R327	J707385P123	RES MFLM 1/8W 12K 5%	1
R328	J707385P332	RES MFLM 1/8W 3K3 5%	1
R329	J707385P102	RES MFLM 1/8W 1K0 5%	1
R401	J707385P390	RES MFLM 1/8W 39R 5%	1
R402	J707385P100	RES MFLM 1/8W 10R 5%	1
R403	J707385P222	RES MFLM 1/8W 2K2 5%	1
R404	J707385P472	RES MFLM 1/8W 4K7 5%	1
R405	J707385P100	RES MFLM 1/8W 10R 5%	1
R406	J707385P820	RES MFLM 1/8W 82R 5%	1
R407	J707385P470	RES MFLM 1/8W 47R 5%	1
R408	J707385P470	RES MFLM 1/8W 47R 5%	1
R409	J707385P332	RES MFLM 1/8W 3K3 5%	1
R410	J707385P471	RES MFLM 1/8W 470R 5%	1
R411	J707385P123	RES MFLM 1/8W 12K 5%	1
R412	J707385P472	RES MFLM 1/8W 4K7 5%	1
R413	J707385P821	RES MFLM 1/8W 820R 5%	1
R414	J707385P332	RES MFLM 1/8W 3K3 5%	1
R415	J707385P222	RES MFLM 1/8W 2K2 5%	1
R416	J707385P562	RES MFLM 1/8W 5K6 5%	1
R417	J707385P103	RES MFLM 1/8W 10K 5%	1
R418	J707385P153	RES MFLM 1/8W 15K 5%	1
R419	J707385P182	RES MFLM 1/8W 1K8 5%	1
R420	J707385P182	RES MFLM 1/8W 1K8 5%	1
R421	J707385P182	RES MFLM 1/8W 1K8 5%	1
R422	J707385P473	RES MFLM 1/8W 47K 5%	1
R423	J707385P153	RES MFLM 1/8W 15K 5%	1
R424	J708538P5	RES VAR CERM 10K 20%	1
R425	J707385P272	RES MFLM 1/8W 2K7 5%	1
R426	J707385P563	RES MFLM 1/8W 56K 5%	1
R427	J707385P273	RES MFLM 1/8W 27K 5%	1
R428	J707385P683	RES MFLM 1/8W 68K 5%	1
R429	J707385P104	RES MFLM 1/8W 100K 5%	1

DATE: 9/23/1987

Pos	Code No	Description	Qt
R430	J707385P334	RES MFLM 1/8W 330K 5%	1
R431	J707385P473	RES MFLM 1/8W 47K 5%	1
R432	J707385P473	RES MFLM 1/8W 47K 5%	1
R433	J707385P271	RES MFLM 1/8W 270R 5%	1
R434	J707385P102	RES MFLM 1/8W 1K0 5%	1
R435	J706147P3	RES THERM PTC 250R 25%	1
R436	J707385P392	RES MFLM 1/8W 3K9 5%	1
R437	J707406P7	RES THERM NTC 220R 10%	1
R438	J707385P222	RES MFLM 1/8W 2K2 5%	1
R439	J707385P392	RES MFLM 1/8W 3K9 5%	1
R440	J707385P392	RES MFLM 1/8W 3K9 5%	1
R441	J707385P101	RES MFLM 1/8W 100R 5%	1
R442	J708538P6	RES VAR CERM 20K 20%	1
R444	J707385P473	RES MFLM 1/8W 47K 5%	1
R445	J707385P273	RES MFLM 1/8W 27K 5%	1
R446	J707385P224	RES MFLM 1/8W 220K 5%	1
R447	J707385P392	RES MFLM 1/8W 3K9 5%	1
R448	J707385P101	RES MFLM 1/8W 100R 5%	1
R449	J707385P470	RES MFLM 1/8W 47R 5%	1
R450	J707385P103	RES MFLM 1/8W 10K 5%	1
R452	J707385P332	RES MFLM 1/8W 3K3 5%	1
R501	J707385P821	RES MFLM 1/8W 820R 5%	1
R502	J707385P821	RES MFLM 1/8W 820R 5%	1
R504	J707385P104	RES MFLM 1/8W 100K 5%	1
R505	J707385P104	RES MFLM 1/8W 100K 5%	1
R508	J707385P103	RES MFLM 1/8W 10K 5%	1
R509	J707385P151	RES MFLM 1/8W 150R 5%	1
R510	J707385P103	RES MFLM 1/8W 10K 5%	1
R512	J707385P561	RES MFLM 1/8W 560R 5%	1
R513	J707385P272	RES MFLM 1/8W 2K7 5%	1
R514	J707385P682	RES MFLM 1/8W 6K8 5%	1
R515	J707385P221	RES MFLM 1/8W 220R 5%	1
R516	J707385P221	RES MFLM 1/8W 220R 5%	1
R517	J707385P101	RES MFLM 1/8W 100R 5%	1
R518	J707385P100	RES MFLM 1/8W 10R 5%	1
R529	J707385P392	RES MFLM 1/8W 3K9 5%	1
R602	J707385P122	RES MFLM 1/8W 1K2 5%	1

Pos	Code No	Description	Qt
R603	J707385P122	RES MFLM 1/8W 1K2 5%	1
R605	J707385P104	RES MFLM 1/8W 100K 5%	1
R606	J707385P104	RES MFLM 1/8W 100K 5%	1
R607	J707385P561	RES MFLM 1/8W 560R 5%	1
R608	J707385P682	RES MFLM 1/8W 6K8 5%	1
R609	J707385P332	RES MFLM 1/8W 3K3 5%	1
R610	J707385P331	RES MFLM 1/8W 330R 5%	1
R611	J707385P151	RES MFLM 1/8W 150R 5%	1
R612	J707385P102	RES MFLM 1/8W 1K0 5%	1
R613	J707385P101	RES MFLM 1/8W 100R 5%	1
R614	J707385P272	RES MFLM 1/8W 2K7 5%	1
R615	J707385P682	RES MFLM 1/8W 6K8 5%	1
R616	J707385P181	RES MFLM 1/8W 180R 5%	1
R617	J707385P563	RES MFLM 1/8W 56K 5%	1
R618	J707385P683	RES MFLM 1/8W 68K 5%	1
R619	J707385P104	RES MFLM 1/8W 100K 5%	1
R620	J707385P102	RES MFLM 1/8W 1K0 5%	1
R621	J707385P471	RES MFLM 1/8W 470R 5%	1
R622	J707385P151	RES MFLM 1/8W 150R 5%	1
R623	J707385P224	RES MFLM 1/8W 220K 5%	1
R624	J707385P223	RES MFLM 1/8W 22K 5%	1
R625	J707385P101	RES MFLM 1/8W 100R 5%	1
R626	J707385P100	RES MFLM 1/8W 10R 5%	1
R627	J707385P103	RES MFLM 1/8W 10K 5%	1
R628	J707385P224	RES MFLM 1/8W 220K 5%	1
R629	J707385P124	RES MFLM 1/8W 120K 5%	1
R630	J707385P100	RES MFLM 1/8W 10R 5%	1
R631	J707385P684	RES MFLM 1/8W 680K 5%	1
R632	J707385P223	RES MFLM 1/8W 22K 5%	1
R633	J707385P824	RES MFLM 1/8W 820K 5%	1
R634	J707385P123	RES MFLM 1/8W 12K 5%	1
R635	J707385P102	RES MFLM 1/8W 1K0 5%	1
R636	J707385P332	RES MFLM 1/8W 3K3 5%	1
R637	J707385P181	RES MFLM 1/8W 180R 5%	1
R638	J707385P474	RES MFLM 1/8W 470K 5%	1
R639	J707385P333	RES MFLM 1/8W 33K 5%	1
R640	J707385P105	RES MFLM 1/8W 1M0 10%	1

Pos	Code No	Description	Qt
R641	J707385P184	RES MFLM 1/8W 180K 5%	1
R642	J707385P184	RES MFLM 1/8W 180K 5%	1
R643	J707385P105	RES MFLM 1/8W 1M0 10%	1
R644	J707385P473	RES MFLM 1/8W 47K 5%	1
R645	J707385P153	RES MFLM 1/8W 15K 5%	1
R646	J707385P393	RES MFLM 1/8W 39K 5%	1
R647	J707385P333	RES MFLM 1/8W 33K 5%	1
R649	J707385P473	RES MFLM 1/8W 47K 5%	1
R650	J707385P562	RES MFLM 1/8W 5K6 5%	1
R651	J707385P473	RES MFLM 1/8W 47K 5%	1
R652	J707385P223	RES MFLM 1/8W 22K 5%	1
R653	J707385P823	RES MFLM 1/8W 82K 5%	1
R654	J707385P153	RES MFLM 1/8W 15K 5%	1
R655	J707385P183	RES MFLM 1/8W 18K 5%	1
R656	J707385P393	RES MFLM 1/8W 39K 5%	1
R657	J707385P823	RES MFLM 1/8W 82K 5%	1
R658	J707385P154	RES MFLM 1/8W 150K 5%	1
R659	J707385P223	RES MFLM 1/8W 22K 5%	1
R660	J707385P333	RES MFLM 1/8W 33K 5%	1
R661	J707385P473	RES MFLM 1/8W 47K 5%	1
R662	J707385P473	RES MFLM 1/8W 47K 5%	1
R663	J708538P6	RES VAR CERM 20K 20%	1
R664	J707385P473	RES MFLM 1/8W 47K 5%	1
R665	J707385P824	RES MFLM 1/8W 820K 5%	1
R666	J707385P124	RES MFLM 1/8W 120K 5%	1
R667	J707385P124	RES MFLM 1/8W 120K 5%	1
R668	J707385P122	RES MFLM 1/8W 1K2 5%	1
R669	J707385P221	RES MFLM 1/8W 220R 5%	1
R670	J707385P103	RES MFLM 1/8W 10K 5%	1
R671	J707385P562	RES MFLM 1/8W 5K6 5%	1
R672	J707385P822	RES MFLM 1/8W 8K2 5%	1
R673	J707385P822	RES MFLM 1/8W 8K2 5%	1
R674	J707385P101	RES MFLM 1/8W 100R 5%	1
R675	J708538P5	RES VAR CERM 10K 20%	1
R676	J707385P562	RES MFLM 1/8W 5K6 5%	1
R677	J708538P5	RES VAR CERM 10K 20%	1
R678	J707385P470	RES MFLM 1/8W 47R 5%	1

Pos	Code No	Description	Qt
R679	J707385P821	RES MFLM 1/8W 820R 5%	1
R680	J708538P6	RES VAR CERM 20K 20%	1
R681	J707385P223	RES MFLM 1/8W 22K 5%	1
R682	J707385P223	RES MFLM 1/8W 22K 5%	1
R683	J707385P223	RES MFLM 1/8W 22K 5%	1
R684	J707385P183	RES MFLM 1/8W 18K 5%	1
R685	J707385P183	RES MFLM 1/8W 18K 5%	1
R686	J707385P103	RES MFLM 1/8W 10K 5%	1
R687	J707385P103	RES MFLM 1/8W 10K 5%	1
R689	J707385P105	RES MFLM 1/8W 1M0 10%	1
R690	J707385P124	RES MFLM 1/8W 120K 5%	1
R691	J707385P273	RES MFLM 1/8W 27K 5%	1
R692	J707385P223	RES MFLM 1/8W 22K 5%	1
R693	J707385P105	RES MFLM 1/8W 1M0 10%	1
R694	J707385P223	RES MFLM 1/8W 22K 5%	1
R695	J707385P105	RES MFLM 1/8W 1M0 10%	1
R696	J707385P223	RES MFLM 1/8W 22K 5%	1
R697	J707385P105	RES MFLM 1/8W 1M0 10%	1
R698	J707385P103	RES MFLM 1/8W 10K 5%	1
R699	J707385P392	RES MFLM 1/8W 3K9 5%	1
R702	A701250P413	RES MFILM 133K 1% 1/4W	1
R703	A701250P213	RES MFILM 1K33 1% 1/4W	1
R704	A701250P326	RES MFILM 18K2 1% 1/4W	1
R707	J707385P104	RES MFLM 1/8W 100K 5%	1
R708	J707385P105	RES MFLM 1/8W 1M0 10%	1
R709	J707385P181	RES MFLM 1/8W 180R 5%	1
R710	J707385P101	RES MFLM 1/8W 100R 5%	1
R711	J707385P223	RES MFLM 1/8W 22K 5%	1
R712	J707385P154	RES MFLM 1/8W 150K 5%	1
R713	J707385P821	RES MFLM 1/8W 820R 5%	1
R714	J707385P104	RES MFLM 1/8W 100K 5%	1
R715	J707385P563	RES MFLM 1/8W 56K 5%	1
U100	J708165P2	IC LIN OP-AMP 324	1
U201	J708333P1	IC LIN VR FIX 4785	1
U401	J707449P1	IC LIN IF-AMP 3357	1
U402	M905766G1	INT CKT SQ 4002 G1/G2/G5/G4	1
U402	M905766G2	INT CKT SQ 4003 G6/G3	1

DATE: 9/23/1987

Pos	Code No	Description	Qt
U601	J707859P1	IC LIN OP-AMP 204	1
U602	J707859P1	IC LIN OP-AMP 204	1
U604	J707859P1	IC LIN OP-AMP 204	1
U606	J707243P1	IC DIG REG 4094	1
U607	J707374P1	IC PLL PRESC 8793	1
U608	B800902P1	IC PLL SYN CUSTOM DES	1
U609	J707859P1	IC LIN OP-AMP 204	1
U610	J708503P2	IC LIN CMPAR LM 339	1
U615	J708621P2	CPLR OPTO PC 827	1
U616	J708503P2	IC LIN CMPAR LM 339	1
W003	J707256P1	COIL FIX	1
W004	J707256P1	COIL FIX	1
W005	J708717P1	STRAP	1
W006	J708716P1	STRAP	1
Y401	J707309P1	CRYSTAL UNIT 20.9450MHZ	1
Y701	J707567P18	CRYSTAL UNIT 7.3750MHZ	1
Z401	J707310P1	FLTR CRY 21.4 +/-7.50KHZ G1/G4	1
Z401	J707310P2	FLTR CRY 21.4 +/-7.50KHZ G2/G5	1
Z401	J707310P3	FLTR CRY 21.4 +/-3.75KHZ G3/G6	1
Z402	J707446P1	FLTR CER 455K +/-10KHZ G1/G4	1
Z402	J707446P3	FLTR CER 455K +/-7.5KHZ G2/G5	1
Z402	J707446P4	FLTR CER 455K +/-4.5KHZ G3/G6	1
Z403	J707446P1	FLTR CER 455K +/-10KHZ G1/G4	1
Z403	J707446P3	FLTR CER 455K +/-7.5KHZ G2/G5	1
Z403	J707446P4	FLTR CER 455K +/-4.5KHZ G3/G6	1
	M905893P1R2	BD PW	1
		NON ELECTRONICAL PARTS	
	J707256P4	COIL FIX	3
	K805776P1	CASTING HEAT SINK	1
	K805569G2	SHIELD METALLIZED	1
	J706281P7	CORE SCREW FERR U 25	8
	J706804P2	WASH INS CRYS FOR HC-18/U	4

Pos	Code No	Description	Qt

DATE: 5/ 8/1987

Pos	Code No	Description	Qt
C100	J707809P13	CAP CER NPO 10P 5%	1
C101	J707438P4	CAP CER CL2 680P 10%	1
C102	J707438P7	CAP CER CL2 2N2 10%	1
C103	J707436P65	CAP CER NPO 150P 5%	1
C104	J707809P15	CAP CER NPO 15P 5%	1
C105	J707809P17	CAP CER NPO 22P 5%	1
C106	J707809P15	CAP CER NPO 15P 5%	1
C107	J707438P7	CAP CER CL2 2N2 10%	1
C108	J707438P7	CAP CER CL2 2N2 10%	1
C109	J707809P25	CAP CER NPO 100P 5%	1
C110	J707809P23	CAP CER NPO 68P 5% G1/G2/G3	1
C110	J707809P17	CAP CER NPO 22P 5% G4/G5/G6	1
C111	J707438P7	CAP CER CL2 2N2 10%	1
C112	J707438P14	CAP CER CL2 10N 10%	1
C113	J707438P7	CAP CER CL2 2N2 10%	1
C114	J707438P7	CAP CER CL2 2N2 10%	1
C115	J707809P27	CAP CER NPO 150P 5% G1/G2/G3	1
C115	J707809P23	CAP CER NPO 68P 5% G4/G5/G6	1
C116	J707809P27	CAP CER NPO 150P 5% G1/G2/G3	1
C116	J707809P24	CAP CER NPO 82P 5% G4/G5/G6	1
C120	J707353P6	CAP ELECT 4U7 25V	1
C121	J707438P14	CAP CER CL2 10N 10%	1
C122	J707438P7	CAP CER CL2 2N2 10%	1
C123	J707438P14	CAP CER CL2 10N 10%	1
C124	J707438P7	CAP CER CL2 2N2 10%	1
C125	A700006P40	CAP MICA 170P 5% G1/G2/G3	1
C125	A700006P38	CAP MICA 150P 5% G4/G5/G6	1
C126	J709524P59	CAP CER RF 270P 5% G1/G2/G3	1
C126	J709524P49	CAP CER RF 100P 5% G4/G5/G6	1
C127	J709524P51	CAP CER RF 120P 5% G1/G2/G3	1
C127	J709524P45	CAP CER RF 68P 5% G4/G5/G6	1
C128	A700006P35	CAP MICA 110P 5% G1/G2/G3	1
C128	A700006P26	CAP MICA 47P 5% G4/G5/G6	1
C130	J707809P14	CAP CER NPO 12P 5%	1
C131	J707809P9	CAP CER NPO 4P7 .25P	1
C132	J707809P12	CAP CER NPO 8P2 .25P	1
C133	J707809P12	CAP CER NPO 8P2 .25P	1

Pos	Code No	Description	Qt
C134	J707353P6	CAP ELECT 4U7 25V	1
C136	J707438P20	CAP CER CL2 33N 10%	1
C137	J707438P7	CAP CER CL2 2N2 10%	1
C138	J707438P7	CAP CER CL2 2N2 10%	1
C139	J707438P7	CAP CER CL2 2N2 10%	1
C140	J707438P7	CAP CER CL2 2N2 10%	1
C141	J707438P7	CAP CER CL2 2N2 10%	1
C142	A700006P14	CAP MICA 18P 5%	1
C143	A700006P26	CAP MICA 47P 5%	1
C144	A700006P26	CAP MICA 47P 5%	1
C145	A700006P18	CAP MICA 24P 5%	1
C146	J707438P7	CAP CER CL2 2N2 10%	1
C147	J707438P7	CAP CER CL2 2N2 10%	1
C148	J707438P7	CAP CER CL2 2N2 10%	1
C149	J707438P7	CAP CER CL2 2N2 10%	1
C150	J707809P10	CAP CER NPO 5P6 .25P G1/G2/G3	1
C150	J707809P12	CAP CER NPO 5P6 .25P G4/G5/G6	1
C151	J707809P10	CAP CER NPO 5P6 .25P G1/G2/G3	1
C151	J707809P12	CAP CER NPO 5P6 .25P G4/G5/G6	1
C152	J707438P7	CAP CER CL2 2N2 10%	1
C153	J707438P7	CAP CER CL2 2N2 10%	1
C154	J707438P7	CAP CER CL2 2N2 10%	1
C155	J707438P7	CAP CER CL2 2N2 10%	1
C156	J707353P3	CAP ELECT 0U47 50V	1
C157	J707438P7	CAP CER CL2 2N2 10%	1
C158	J707438P7	CAP CER CL2 2N2 10%	1
C159	J707438P14	CAP CER CL2 10N 10%	1
C160	J707436P77	CAP CER NPO 470P 5%	1
C161	J707438P7	CAP CER CL2 2N2 10%	1
C162	J707438P14	CAP CER CL2 10N 10%	1
C163	J707438P20	CAP CER CL2 33N 10%	1
C164	J707438P7	CAP CER CL2 2N2 10%	1
C165	J707809P16	CAP CER NPO 18P 5% G1/G2/G3	1
C165	J707809P17	CAP CER NPO 22P 5% G4/G5/G6	1
C166	J707438P5	CAP CER CL2 1N 10%	1
C167	J707412P13	CAP PYES 470N 10%	1
C168	J707438P7	CAP CER CL2 2N2 10%	1

DATE: 5/ 8/1987

Pos	Code No	Description	Qt
C169	J707809P1	CAP CER NPO 1PO .25P	1
C170	J707438P14	CAP CER CL2 10N 10%	1
C171	J707438P14	CAP CER CL2 10N 10%	1
C172	J707438P14	CAP CER CL2 10N 10%	1
C201	J707438P26	CAP CER CL2 100N 10%	1
C202	J707444P8	CAP TA SOL 22U 16V	1
C203	J706005P12	CAP ELECT 47U 40V	1
C204	J707438P7	CAP CER CL2 2N2 10%	1
C205	J707412P9	CAP PYES 100N 10%	1
C206	J707444P4	CAP TA SOL 1U 35V	1
C301	J707436P69	CAP CER NPO 220P 5%	1
C302	J707438P5	CAP CER CL2 1N 10%	1
C304	J707436P10	CAP CER NPO 5P6 .25P	1
C305	J707436P33	CAP CER NPO 27P 5%	1
C306	J707483P4	CAP PHEN 0P56 5%	1
C307	J707438P5	CAP CER CL2 1N 10%	1
C309	J707436P33	CAP CER NPO 27P 5%	1
C310	J707438P5	CAP CER CL2 1N 10%	1
C311	J707436P10	CAP CER NPO 5P6 .25P	1
C312	J707436P87	CAP CER NPO 1N2 5%	1
C315	J707436P10	CAP CER NPO 5P6 .25P	1
C317	J707444P2	CAP TA SOL 0U22 35V	1
C318	J707438P5	CAP CER CL2 1N 10%	1
C319	J707436P33	CAP CER NPO 27P 5%	1
C320	J707438P5	CAP CER CL2 1N 10%	1
C322	J707483P7	CAP PHEN 1P00 5%	1
C323	J707483P6	CAP PHEN 0P82 5%	1
C324	J707436P7	CAP CER NPO 3P3 .25P	1
C325	J707438P5	CAP CER CL2 1N 10%	1
C326	J707436P33	CAP CER NPO 27P 5%	1
C328	J707436P33	CAP CER NPO 27P 5%	1
C331	J707483P6	CAP PHEN 0P82 5%	1
C332	J707436P33	CAP CER NPO 27P 5%	1
C333	J707436P7	CAP CER NPO 3P3 .25P	1
C334	J707436P8	CAP CER NPO 3P9 .25P	1
C335	J707438P5	CAP CER CL2 1N 10%	1
C338	J707436P37	CAP CER NPO 33P 5%	1

Pos	Code No	Description	Qt
C339	J707438P5	CAP CER CL2 1N 10%	1
C340	J707438P8	CAP CER CL2 3N3 10%	1
C345	J707438P5	CAP CER CL2 1N 10%	1
C347	J707438P5	CAP CER CL2 1N 10%	1
C348	J707438P5	CAP CER CL2 1N 10%	1
C350	J707436P10	CAP CER NPO 5P6 .25P	1
C351	J707436P25	CAP CER NPO 18P 5%	1
C353	J707483P8	CAP PHEN 1P20 5%	1
C354	J707436P25	CAP CER NPO 18P 5%	1
C355	J707436P9	CAP CER NPO 4P7 .25P	1
C356	J707438P5	CAP CER CL2 1N 10%	1
C357	J707436P1	CAP CER NPO 1PO .25P	1
C358	J707436P1	CAP CER NPO 1PO .25P	1
C359	J707438P5	CAP CER CL2 1N 10%	1
C401	J707438P8	CAP CER CL2 3N3 10%	1
C402	J707438P8	CAP CER CL2 3N3 10%	1
C403	J707438P8	CAP CER CL2 3N3 10%	1
C404	J707436P37	CAP CER NPO 33P 5%	1
C405	J707438P26	CAP CER CL2 100N 10%	1
C406	J707436P10	CAP CER NPO 5P6 .25P	1
C407	J707436P33	CAP CER NPO 27P 5%	1
C408	J707438P5	CAP CER CL2 1N 10%	1
C409	J707438P8	CAP CER CL2 3N3 10%	1
C410	J707444P8	CAP TA SOL 22U 16V	1
C411	J707438P26	CAP CER CL2 100N 10%	1
C412	J707438P26	CAP CER CL2 100N 10%	1
C413	J707436P37	CAP CER NPO 33P 5%	1
C414	J707438P8	CAP CER CL2 3N3 10%	1
C415	J707436P69	CAP CER NPO 220P 5%	1
C416	J707436P61	CAP CER NPO 100P 5%	1
C417	J707436P33	CAP CER NPO 27P 5%	1
C418	J707438P14	CAP CER CL2 10N 10%	1
C419	J707438P26	CAP CER CL2 100N 10%	1
C420	J707438P14	CAP CER CL2 10N 10%	1
C421	J707438P26	CAP CER CL2 100N 10%	1
C422	J707438P26	CAP CER CL2 100N 10%	1
C423	J707436P13	CAP CER NPO 10P 5%	1

DATE: 5/ 8/1987

Pos	Code No	Description	Qt
C424	J707438P8	CAP CER CL2 3N3 10%	1
C425	J707412P13	CAP PYES 470N 10%	1
C426	J707436P93	CAP CER NPO 2N2 5%	1
C427	J707436P73	CAP CER NPO 330P 5%	1
C428	J707436P73	CAP CER NPO 330P 5%	1
C429	J707438P14	CAP CER CL2 10N 10%	1
C430	J707444P8	CAP TA SOL 22U 16V	1
C431	J707444P8	CAP TA SOL 22U 16V	1
C432	J707438P26	CAP CER CL2 100N 10%	1
C433	J707438P26	CAP CER CL2 100N 10%	1
C434	J707438P8	CAP CER CL2 3N3 10%	1
C435	J707436P1	CAP CER NPO 1P0 .25P	1
C436	J707438P26	CAP CER CL2 100N 10%	1
C437	J707436P45	CAP CER NPO 47P 5%	1
C438	J707438P14	CAP CER CL2 10N 10%	1
C501	J707412P11	CAP PYES 220N 10%	1
C502	J707412P11	CAP PYES 220N 10%	1
C504	A700235P16	CAP CER N150 18P 5%	1
C505	A700235P11	CAP CER N150 6P8 .25P	1
C506	A700235P20	CAP CER N150 39P 5%	1
C507	A700235P19	CAP CER N150 33P 5%	1
C508	A700235P25	CAP CER N150 100P 5%	1
C509	J707436P6	CAP CER NPO 2P7 .25P	1
C512	J707436P5	CAP CER NPO 2P2 .25P	1
C513	J707438P2	CAP CER CL2 330P 10%	1
C514	J707438P6	CAP CER CL2 1N5 10%	1
C517	J707444P6	CAP TA SOL 4U7 35V	1
C518	J707436P2	CAP CER NPO 1P2 .25P	1
C519	J707438P6	CAP CER CL2 1N5 10%	1
C520	J707436P69	CAP CER NPO 220P 5%	1
C521	J707436P29	CAP CER NPO 22P 5%	1
C522	J707438P6	CAP CER CL2 1N5 10%	1
C523	J707436P5	CAP CER NPO 2P2 .25P	1
C524	J707438P3	CAP CER CL2 470P 10%	1
C525	J707438P3	CAP CER CL2 470P 10%	1
C527	J707438P3	CAP CER CL2 470P 10%	1
C528	J707438P26	CAP CER CL2 100N 10%	1

Pos	Code No	Description	Qt
C540	J707438P3	CAP CER CL2 470P 10%	1
C541	J707438P3	CAP CER CL2 470P 10%	1
C543	J707438P3	CAP CER CL2 470P 10%	1
C544	J707438P3	CAP CER CL2 470P 10%	1
C545	J707436P61	CAP CER NPO 100P 5%	1
C601	J707412P11	CAP PYES 220N 10%	1
C602	J707412P11	CAP PYES 220N 10%	1
C603	J707438P26	CAP CER CL2 100N 10%	1
C604	A700235P13	CAP CER N150 10P 5%	1
C605	A700235P10	CAP CER N150 5P6 .25P	1
C606	A700235P38	CAP CER N150 16P 5%	1
C607	A700235P11	CAP CER N150 6P8 .25P	1
C608	A700233P9	CAP CER CL2 2N2 20%	1
C610	J707436P61	CAP CER NPO 100P 5%	1
C611	J707436P6	CAP CER NPO 2P7 .25P	1
C612	J707438P6	CAP CER CL2 1N5 10%	1
C613	J707444P6	CAP TA SOL 4U7 35V	1
C614	J707438P6	CAP CER CL2 1N5 10%	1
C615	J707438P10	CAP CER CL2 4N7 10%	1
C616	J707438P4	CAP CER CL2 680P 10%	1
C617	J707436P49	CAP CER NPO 56P 5%	1
C618	J707436P1	CAP CER NPO 1P0 .25P	1
C619	J707438P6	CAP CER CL2 1N5 10%	1
C620	J707436P61	CAP CER NPO 100P 5%	1
C621	J707436P21	CAP CER NPO 15P 5%	1
C622	J707436P5	CAP CER NPO 2P2 .25P	1
C623	J707438P26	CAP CER CL2 100N 10%	1
C624	J707436P61	CAP CER NPO 100P 5%	1
C625	J707438P6	CAP CER CL2 1N5 10%	1
C626	J707438P5	CAP CER CL2 1N 10%	1
C627	J707438P26	CAP CER CL2 100N 10%	1
C628	J707436P3	CAP CER NPO 1P5 .25P	1
C629	J707436P65	CAP CER NPO 150P 5%	1
C630	J707438P26	CAP CER CL2 100N 10%	1
C631	J707438P6	CAP CER CL2 1N5 10%	1
C632	J707444P6	CAP TA SOL 4U7 35V	1
C633	J707444P17	CAP TA SOL 47U 10V	1

DATE: 5/ 8/1987

Pos	Code No	Description	Qt
C634	J707438P26	CAP CER CL2 100N 10%	1
C635	J707438P1	CAP CER CL2 220P 10%	1
C636	J707444P17	CAP TA SOL 47U 10V	1
C637	J707438P26	CAP CER CL2 100N 10%	1
C638	J707438P5	CAP CER CL2 1N 10%	1
C639	J707438P8	CAP CER CL2 3N3 10%	1
C640	J707412P8	CAP PYES 68N 10%	1
C641	J707412P13	CAP PYES 470N 10%	1
C642	J707412P13	CAP PYES 470N 10%	1
C643	J707438P26	CAP CER CL2 100N 10%	1
C644	J707436P6	CAP CER NPO 2P7 .25P	1
C645	J707436P25	CAP CER NPO 18P 5%	1
C646	J707436P63	CAP CER NPO 120P 5%	1
C647	J707436P13	CAP CER NPO 10P 5%	1
C652	J707438P22	CAP CER CL2 47N 10%	1
C653	J707444P6	CAP TA SOL 4U7 35V	1
C656	J707438P3	CAP CER CL2 470P 10%	1
C657	J707438P3	CAP CER CL2 470P 10%	1
C659	J707438P5	CAP CER CL2 1N 10%	1
C660	J707438P14	CAP CER CL2 10N 10%	1
C666	J707438P3	CAP CER CL2 470P 10%	1
C667	J707438P3	CAP CER CL2 470P 10%	1
C701	J707436P29	CAP CER NPO 22P 5%	1
C702	J708702P22	CAP CER N750 56P 5%	1
C703	J707436P69	CAP CER NPO 220P 5%	1
C705	J707438P5	CAP CER CL2 1N 10%	1
C706	J707438P14	CAP CER CL2 10N 10%	1
C707	J707436P10	CAP CER NPO 5P6 .25P	1
C708	J707438P14	CAP CER CL2 10N 10%	1
C709	J707438P14	CAP CER CL2 10N 10%	1
D100	A700047P3	DIO SI SIG 1N6263	1
D101	J706892P1	DIO SI PIN UM 9401	1
D102	J706892P1	DIO SI PIN UM 9401	1
D103	J707390P1	DIO SI SIG BAV 74	1
D300	J707928P2	DIO SI CAP BB 809	1
D301	J707928P2	DIO SI CAP BB 809	1
D302	J707928P2	DIO SI CAP BB 809	1

Pos	Code No	Description	Qt
D303	J707928P2	DIO SI CAP BB 809	1
D304	J707928P2	DIO SI CAP BB 809	1
D305	J707928P2	DIO SI CAP BB 809	1
D306	J707928P2	DIO SI CAP BB 809	1
D307	J707928P2	DIO SI CAP BB 809	1
D401	A700025P8	DIO SI ZENR 6V8 5% 0.4W	1
D501	J707928P2	DIO SI CAP BB 809	1
D502	J707928P2	DIO SI CAP BB 809	1
D503	J707928P2	DIO SI CAP BB 809	1
D504	J707928P2	DIO SI CAP BB 809	1
D505	J707928P2	DIO SI CAP BB 809	1
D506	J707397P1	DIO SI CAP BBY 40	1
D601	J707928P2	DIO SI CAP BB 809	1
D602	J707928P2	DIO SI CAP BB 809	1
D603	J709536P1	DIO SI CAP MV 2111	1
D604	J709536P1	DIO SI CAP MV 2111	1
D605	J707389P1	DIO SI SIG BAV 99	1
D606	J708681P1	DIO SI SIG BAW 56	1
D607	J707390P1	DIO SI SIG BAV 74	1
D608	J707390P1	DIO SI SIG BAV 74	1
D610	J708681P1	DIO SI SIG BAW 56	1
D701	A700073P1	DIO SI CAP BB 409	1
D702	J707390P1	DIO SI SIG BAV 74	1
L100	K805653G9	COIL ASM 9 1/2T	1
L101	A700024P7	COIL RF FIX 0.33UH 10%	1
L102	A700024P3	COIL RF FIX 0.15UH 10%	1
L103	A700024P12	COIL RF FIX 0.82UH 10%	1
L104	K805653G2	COIL ASM 2 1/2T	1
L105	K805653G5	COIL ASM 5 1/2T G1/G2/G3	1
L105	K805653G8	COIL ASM 8 1/2T G4/G5/G6	1
L106	J707339G1	COIL FIX ASM	1
L107	K805653G4	COIL ASM 4 1/2T	1
L108	A700024P3	COIL RF FIX 0.15UH 10%	1
L109	J707256P2	COIL FIX	1
L110	J709287P1	CORE TOR FERR	1
L111	J707256P1	COIL FIX G1/G2/G3	1
L111	J707256G1	COIL ASM 1 1/2T G4/G5/G6	1

DATE: 5/ 8/1987

Pos	Code No	Description	Qt
L113	A700024P3	COIL RF FIX 0.15UH 10%	1
L114	J709287P1	CORE TOR FERR	1
L115	J707256P2	COIL FIX	1
L116	J709287P1	CORE TOR FERR	1
L117	J709603P2	COIL G1/G2/G3	1
L117	J709603P6	COIL ASM 1 1/2T G4/G5/G6	1
L118	J709603P1	COIL G1/G2/G3	1
L118	J709603P6	COIL FIX G4/G5/G6	1
L121	A700024P18	COIL RF FIX 2.7UH 10%	1
L122	A700024P25	COIL RF FIX 10UH 10%	1
L123	A700024P25	COIL RF FIX 10UH 10%	1
L124	K805653G7	COIL ASM 7 1/2 T	1
L125	K805653G7	COIL ASM 7 1/2 T	1
L126	K805653G9	COIL ASM 9 1/2T	1
L127	A700024P25	COIL RF FIX 10UH 10%	1
L128	A700024P25	COIL RF FIX 10UH 10%	1
L301	J709099P8	COIL RF VAR 7-1/2T	1
L302	J709099P15	COIL RF VAR 7-1/2T TAP	1
L303	J707486P11	COIL RF FIX 2.2UH 10%	1
L304	J709099P8	COIL RF VAR 7-1/2T	1
L305	J707486P2	COIL RF FIX 3.3UH 10%	1
L306	J709099P8	COIL RF VAR 7-1/2T	1
L308	J709099P8	COIL RF VAR 7-1/2T	1
L310	J709099P9	COIL RF VAR 7-1/2T TAP	1
L312	J708428P1	COIL RF VAR 45 MHZ	1
L313	J709099P12	COIL RF VAR 5-1/2T TAP	1
L314	J709099P14	COIL RF VAR 5-1/2T TAP	1
L401	J707486P3	COIL RF FIX 6.8UH 10%	1
L403	K805570G6	COIL AS M	1
L405	J708428P1	COIL RF VAR 45 MHZ	1
L406	K805570G5	COIL ASM	1
L407	A700024P25	COIL RF FIX 10UH 10%	1
L408	J708428P1	COIL RF VAR 45 MHZ	1
L409	J707431P1	COIL RF VAR 455KHZ 25%	1
L410	J707431P1	COIL RF VAR 455KHZ 25%	1
L501	A700024P21	COIL RF FIX 4.7UH 10%	1
L502	A700024P21	COIL RF FIX 4.7UH 10%	1

Pos	Code No	Description	Qt
L504	A700024P21	COIL RF FIX 4.7UH 10%	1
L505	L855671P2	COIL RADIO FREQUENCY	1
L506	A700024P21	COIL RF FIX 4.7UH 10%	1
L508	A700024P5	COIL RF FIX 0.22UH 10%	1
L601	A700024P21	COIL RF FIX 4.7UH 10%	1
L602	A700024P21	COIL RF FIX 4.7UH 10%	1
L604	A700024P21	COIL RF FIX 4.7UH 10%	1
L605	L855671P2	COIL RA DIO FREQUENCY	1
L606	A700024P21	COIL RF FIX 4.7UH 10%	1
L607	A700024P4	COIL RF FIX 0.18UH 10%	1
L608	A700024P5	COIL RF FIX 0.22UH 10%	1
L701	K805570G7	COIL ASM	1
L702	A700024P43	COIL RF FIX 330UH 10%	1
L703	A700024P27	COIL RF FIX 15UH 10%	1
P102	J707064P112	CONN PWB FEM 12-CKT	1
P105	A701883P4	CONN PWB FEM RECP	1
Q100	J707388P1	TSTR NPN SI BFR 53	1
Q101	A701940P1	TSTR NPN SI RF-PWR 0.4W	1
Q102	J709517P1	TSTR NPN SI RF-PWR 3W	1
Q103	J709162P1	TSTR NPN SI RF-PWR 27W G1/G2/G3	1
Q103	J709163P1	TSTR NPN SI RF-PWR 10W G4/G5/G6	1
Q106	J707432P1	TSTR PNP SI BCX 18	1
Q107	J707386P1	TSTR NPN SI BCW 32	1
Q108	J708406P1	TSTR NPN SI BD 233	1
Q109	J707386P1	TSTR NPN SI BCW 32	1
Q201	J707435P1	TSTR PNP SI BC 369	1
Q202	J707386P1	TSTR NPN SI BCW 32	1
Q203	J707432P1	TSTR PNP SI BCX 18	1
Q204	J707386P1	TSTR NPN SI BCW 32	1
Q301	J706011P2	TSTR NPN SI BFR 91A	1
Q302	J707817P1	TSTR JFET SI J 309	1
Q401	J707817P1	TSTR JFET SI J 309	1
Q402	J707817P1	TSTR JFET SI J 309	1
Q403	J707419P1	TSTR JFET SI BF511	1
Q404	J708418P1	TSTR NPN SI BFS 20	1
Q405	J708418P1	TSTR NPN SI BFS 20	1
R121	J707385P333	RES MFLM 1/8W 33K 5%	1

DATE: 5/ 8/1987

Pos	Code No	Description	Qt
Q407	J707386P1	TSTR NPN SI BCW 32	1
Q408	J707387P1	TSTR PNP SI BCW 30	1
Q501	J707817P1	TSTR JFET SI J 309	1
Q502	J708318P1	TSTR PNP SI BFT 92	1
Q601	J707817P1	TSTR JFET SI J 309	1
Q603	J708318P1	TSTR PNP SI BFT 92	1
Q604	J707433P1	TSTR MFET SI BF 989	1
Q605	J707386P1	TSTR NPN SI BCW 32	1
Q612	J707386P1	TSTR NPN SI BCW 32	1
Q613	J707386P1	TSTR NPN SI BCW 32	1
Q701	J707419P1	TSTR JFET SI BF511	1
Q702	J707387P1	TSTR PNP SI BCW 30	1
R000	J707385P332	RES MFLM 1/8W 3K3 5% G4/G5/G6	1
R100	J707385P101	RES MFLM 1/8W 100R 5%	1
R101	J707385P470	RES MFLM 1/8W 47R 5%	1
R102	J707385P471	RES MFLM 1/8W 470R 5%	1
R103	J707385P390	RES MFLM 1/8W 39R 5%	1
R104	J707385P331	RES MFLM 1/8W 330R 5%	1
R105	J707385P122	RES MFLM 1/8W 1K2 5%	1
R106	J707385P100	RES MFLM 1/8W 10R 5%	1
R107	J707385P100	RES MFLM 1/8W 10R 5%	1
R108	J707385P560	RES MFLM 1/8W 56R 5%	1
R109	J707385P100	RES MFLM 1/8W 10R 5%	1
R110	J707385P100	RES MFLM 1/8W 10R 5% G1/G2/G3	1
R110	J707385P910	RES MFLM 1/8W 1R0 20% G4/G5/G6	1
R111	J707385P220	RES MFLM 1/8W 22R 5%	1
R112	J707385P947	RES MFLM 1/8W 4R7 20%	1
R113	J707385P100	RES MFLM 1/8W 10R 5%	1
R114	J707385P910	RES MFLM 1/8W 1R0 20% G1/G2/G3	1
R114	J707385P918	RES MFLM 1/8W 1R8 20% G4/G5/G6	1
R115	J707385P910	RES MFLM 1/8W 1R0 20% G1/G2/G3	1
R115	J707385P918	RES MFLM 1/8W 1R8 20% G4/G5/G6	1
R116	J707385P121	RES MFLM 1/8W 120R 5%	1
R117	J707385P220	RES MFLM 1/8W 22R 5%	1
R118	J707385P473	RES MFLM 1/8W 47K 5%	1
R119	J707385P820	RES MFLM 1/8W 82R 5%	1
R120	J707385P820	RES MFLM 1/8W 82R 5%	1

Pos	Code No	Description	Qt
R121	J707385P333	RES MFILM 1/8W 33K 5%	1
R122	J707385P221	RES MFLM 1/8W 220R 5%	1
R123	J707385P221	RES MFLM 1/8W 220R 5%	1
R124	J707385P101	RES MFLM 1/8W 100R 5% G1/G2/G3	1
R124	J707385P221	RES MFLM 1/8W 220R 5% G4/G5/G6	1
R125	J707385P330	RES MFLM 1/8W 33R 5%	1
R126	J707385P330	RES MFLM 1/8W 33R 5%	1
R127	J707385P330	RES MFLM 1/8W 33R 5%	1
R128	J707385P100	RES MFLM 1/8W 10R 5%	1
R129	J707385P121	RES MFLM 1/8W 120R 5% G1/G2/G3	1
R129	J707385P560	RES MFLM 1/8W 56R 5% G4/G5/G6	1
R130	J707385P121	RES MFLM 1/8W 120R 5% G1/G2/G3	1
R130	J707385P560	RES MFLM 1/8W 56R 5% G4/G5/G6	1
R131	J707385P392	RES MFLM 1/8W 3K9 5%	1
R132	J708538P9	RES VAR CERM 200K 20%	1
R133	J708538P4	RES VAR CERM 5K0 20%	1
R134	J707385P100	RES MFLM 1/8W 10R 5%	1
R135	J706147P2	RES THERM PTC 80R 25%	1
R136	J707385P682	RES MFLM 1/8W 6K8 5%	1
R137	J707385P223	RES MFLM 1/8W 22K 5%	1
R138	J707385P472	RES MFLM 1/8W 4K7 5%	1
R139	J707385P472	RES MFLM 1/8W 4K7 5%	1
R140	J707385P333	RES MFLM 1/8W 33K 5%	1
R141	J707385P333	RES MFLM 1/8W 33K 5%	1
R142	J707385P104	RES MFLM 1/8W 100K 5%	1
R143	J707385P222	RES MFLM 1/8W 2K2 5%	1
R144	J707385P222	RES MFLM 1/8W 2K2 5%	1
R145	J707385P223	RES MFLM 1/8W 22K 5%	1
R146	J707385P104	RES MFLM 1/8W 100K 5%	1
R147	J707385P104	RES MFLM 1/8W 100K 5%	1
R148	J707385P123	RES MFLM 1/8W 12K 5%	1
R149	J707385P472	RES MFLM 1/8W 4K7 5%	1
R150	J707385P102	RES MFLM 1/8W 1K0 5%	1
R151	J707385P683	RES MFLM 1/8W 68K 5%	1
R152	J707385P104	RES MFLM 1/8W 100K 5%	1
R153	J707385P472	RES MFLM 1/8W 4K7 5%	1
R154	J707385P274	RES MFLM 1/8W 270K 5%	1

DATE: 5/ 8/1987

Pos	Code No	Description	Qt
R155	J707385P682	RES MFLM 1/8W 6K8 5%	1
R156	J707385P102	RES MFLM 1/8W 1K0 5%	1
R157	J707385P100	RES MFLM 1/8W 10R 5%	1
R158	J707385P102	RES MFLM 1/8W 1K0 5%	1
R159	J707385P472	RES MFLM 1/8W 4K7 5%	1
R160	J707385P104	RES MFLM 1/8W 100K 5%	1
R161	J709725P1	RES THERM PTC 1K0	1
R162	J707385P220	RES MFLM 1/8W 22R 5%	1
R201	J707385P561	RES MFLM 1/8W 560R 5%	1
R202	J707385P271	RES MFLM 1/8W 270R 5%	1
R203	J707385P153	RES MFLM 1/8W 15K 5%	1
R204	J707385P153	RES MFLM 1/8W 15K 5%	1
R205	J707385P472	RES MFLM 1/8W 4K7 5%	1
R206	J707385P272	RES MFLM 1/8W 2K7 5%	1
R207	J707385P563	RES MFLM 1/8W 56K 5%	1
R208	J707385P563	RES MFLM 1/8W 56K 5%	1
R209	J707385P271	RES MFLM 1/8W 270R 5%	1
R210	J707385P331	RES MFLM 1/8W 330R 5%	1
R301	J707385P331	RES MFLM 1/8W 330R 5%	1
R302	J707385P392	RES MFLM 1/8W 3K9 5%	1
R303	J707385P104	RES MFLM 1/8W 100K 5%	1
R304	J707385P104	RES MFLM 1/8W 100K 5%	1
R306	J707385P272	RES MFLM 1/8W 2K7 5%	1
R307	J707385P681	RES MFLM 1/8W 680R 5%	1
R308	J707385P470	RES MFLM 1/8W 47R 5%	1
R309	J707385P270	RES MFLM 1/8W 27R 5%	1
R310	J707385P104	RES MFLM 1/8W 100K 5%	1
R311	J707385P101	RES MFLM 1/8W 100R 5%	1
R312	J707385P104	RES MFLM 1/8W 100K 5%	1
R313	J707385P123	RES MFLM 1/8W 12K 5%	1
R314	J707385P104	RES MFLM 1/8W 100K 5%	1
R315	J707385P822	RES MFLM 1/8W 8K2 5%	1
R316	J707385P104	RES MFLM 1/8W 100K 5%	1
R317	J707385P471	RES MFLM 1/8W 470R 5%	1
R318	J707385P100	RES MFLM 1/8W 10R 5%	1
R319	J707385P101	RES MFLM 1/8W 100R 5%	1
R320	J707385P222	RES MFLM 1/8W 2K2 5%	1

Pos	Code No	Description	Qt
R321	J707385P270	RES MFLM 1/8W 27R 5%	1
R322	J707385P471	RES MFLM 1/8W 470R 5%	1
R323	J707385P104	RES MFLM 1/8W 100K 5%	1
R324	J707385P104	RES MFLM 1/8W 100K 5%	1
R325	J707385P100	RES MFLM 1/8W 10R 5%	1
R327	J707385P123	RES MFLM 1/8W 12K 5%	1
R328	J707385P332	RES MFLM 1/8W 3K3 5%	1
R329	J707385P102	RES MFLM 1/8W 1K0 5%	1
R401	J707385P390	RES MFLM 1/8W 39R 5%	1
R402	J707385P100	RES MFLM 1/8W 10R 5%	1
R403	J707385P222	RES MFLM 1/8W 2K2 5%	1
R404	J707385P472	RES MFLM 1/8W 4K7 5%	1
R405	J707385P100	RES MFLM 1/8W 10R 5%	1
R406	J707385P820	RES MFLM 1/8W 82R 5%	1
R407	J707385P470	RES MFLM 1/8W 47R 5%	1
R408	J707385P470	RES MFLM 1/8W 47R 5%	1
R409	J707385P332	RES MFLM 1/8W 3K3 5%	1
R410	J707385P471	RES MFLM 1/8W 470R 5%	1
R411	J707385P123	RES MFLM 1/8W 12K 5%	1
R412	J707385P472	RES MFLM 1/8W 4K7 5%	1
R413	J707385P821	RES MFLM 1/8W 820R 5%	1
R414	J707385P332	RES MFLM 1/8W 3K3 5%	1
R415	J707385P222	RES MFLM 1/8W 2K2 5%	1
R416	J707385P562	RES MFLM 1/8W 5K6 5%	1
R417	J707385P103	RES MFLM 1/8W 10K 5%	1
R418	J707385P153	RES MFLM 1/8W 15K 5%	1
R419	J707385P182	RES MFLM 1/8W 1K8 5%	1
R420	J707385P182	RES MFLM 1/8W 1K8 5%	1
R421	J707385P182	RES MFLM 1/8W 1K8 5%	1
R422	J707385P473	RES MFLM 1/8W 47K 5%	1
R423	J707385P153	RES MFLM 1/8W 15K 5%	1
R424	J708538P5	RES VAR CERM 10K 20%	1
R425	J707385P272	RES MFLM 1/8W 2K7 5%	1
R426	J707385P563	RES MFLM 1/8W 56K 5%	1
R427	J707385P273	RES MFLM 1/8W 27K 5%	1
R428	J707385P683	RES MFLM 1/8W 68K 5%	1
R429	J707385P104	RES MFLM 1/8W 100K 5%	1

DATE: 5/ 8/1987

Pos	Code No	Description	Qt
R430	J707385P334	RES MFLM 1/8W 330K 5%	1
R431	J707385P473	RES MFLM 1/8W 47K 5%	1
R432	J707385P473	RES MFLM 1/8W 47K 5%	1
R433	J707385P271	RES MFLM 1/8W 270R 5%	1
R434	J707385P102	RES MFLM 1/8W 1K0 5%	1
R435	J706147P3	RES THERM PTC 250R 25%	1
R436	J707385P392	RES MFLM 1/8W 3K9 5%	1
R437	J707406P7	RES THERM NTC 220R 10%	1
R438	J707385P222	RES MFLM 1/8W 2K2 5%	1
R439	J707385P392	RES MFLM 1/8W 3K9 5%	1
R440	J707385P392	RES MFLM 1/8W 3K9 5%	1
R441	J707385P101	RES MFLM 1/8W 100R 5%	1
R442	J708538P6	RES VAR CERM 20K 20%	1
R444	J707385P473	RES MFLM 1/8W 47K 5%	1
R445	J707385P273	RES MFLM 1/8W 27K 5%	1
R446	J707385P224	RES MFLM 1/8W 220K 5%	1
R447	J707385P392	RES MFLM 1/8W 3K9 5%	1
R448	J707385P101	RES MFLM 1/8W 100R 5%	1
R449	J707385P470	RES MFLM 1/8W 47R 5%	1
R450	J707385P103	RES MFLM 1/8W 10K 5%	1
R452	J707385P332	RES MFLM 1/8W 3K3 5%	1
R501	J707385P821	RES MFLM 1/8W 820R 5%	1
R502	J707385P821	RES MFLM 1/8W 820R 5%	1
R504	J707385P104	RES MFLM 1/8W 100K 5%	1
R505	J707385P104	RES MFLM 1/8W 100K 5%	1
R508	J707385P103	RES MFLM 1/8W 10K 5%	1
R509	J707385P151	RES MFLM 1/8W 150R 5%	1
R510	J707385P103	RES MFLM 1/8W 10K 5%	1
R512	J707385P561	RES MFLM 1/8W 560R 5%	1
R513	J707385P272	RES MFLM 1/8W 2K7 5%	1
R514	J707385P682	RES MFLM 1/8W 6K8 5%	1
R515	J707385P221	RES MFLM 1/8W 220R 5%	1
R516	J707385P221	RES MFLM 1/8W 220R 5%	1
R517	J707385P101	RES MFLM 1/8W 100R 5%	1
R518	J707385P100	RES MFLM 1/8W 10R 5%	1
R529	J707385P392	RES MFLM 1/8W 3K9 5%	1
R602	J707385P122	RES MFLM 1/8W 1K2 5%	1

Pos	Code No	Description	Qt
R603	J707385P122	RES MFLM 1/8W 1K2 5%	1
R605	J707385P104	RES MFLM 1/8W 100K 5%	1
R606	J707385P104	RES MFLM 1/8W 100K 5%	1
R607	J707385P561	RES MFLM 1/8W 560R 5%	1
R608	J707385P682	RES MFLM 1/8W 6K8 5%	1
R609	J707385P332	RES MFLM 1/8W 3K3 5%	1
R610	J707385P331	RES MFLM 1/8W 330R 5%	1
R611	J707385P151	RES MFLM 1/8W 150R 5%	1
R612	J707385P102	RES MFLM 1/8W 1K0 5%	1
R613	J707385P101	RES MFLM 1/8W 100R 5%	1
R614	J707385P272	RES MFLM 1/8W 2K7 5%	1
R615	J707385P682	RES MFLM 1/8W 6K8 5%	1
R616	J707385P181	RES MFLM 1/8W 180R 5%	1
R617	J707385P563	RES MFLM 1/8W 56K 5%	1
R618	J707385P683	RES MFLM 1/8W 68K 5%	1
R619	J707385P104	RES MFLM 1/8W 100K 5%	1
R620	J707385P102	RES MFLM 1/8W 1K0 5%	1
R621	J707385P471	RES MFLM 1/8W 470R 5%	1
R622	J707385P151	RES MFLM 1/8W 150R 5%	1
R623	J707385P224	RES MFLM 1/8W 220K 5%	1
R624	J707385P223	RES MFLM 1/8W 22K 5%	1
R625	J707385P101	RES MFLM 1/8W 100R 5%	1
R626	J707385P100	RES MFLM 1/8W 10R 5%	1
R627	J707385P103	RES MFLM 1/8W 10K 5%	1
R628	J707385P224	RES MFLM 1/8W 220K 5%	1
R629	J707385P124	RES MFLM 1/8W 120K 5%	1
R630	J707385P100	RES MFLM 1/8W 10R 5%	1
R631	J707385P684	RES MFLM 1/8W 680K 5%	1
R632	J707385P223	RES MFLM 1/8W 22K 5%	1
R633	J707385P824	RES MFLM 1/8W 820K 5%	1
R634	J707385P123	RES MFLM 1/8W 12K 5%	1
R635	J707385P102	RES MFLM 1/8W 1K0 5%	1
R636	J707385P332	RES MFLM 1/8W 3K3 5%	1
R637	J707385P181	RES MFLM 1/8W 180R 5%	1
R638	J707385P474	RES MFLM 1/8W 470K 5%	1
R639	J707385P333	RES MFLM 1/8W 33K 5%	1
R640	J707385P105	RES MFLM 1/8W 1M0 10%	1

DATE: 5/ 8/1987

Pos	Code No	Description	Qt
R641	J707385P184	RES MFLM 1/8W 180K 5%	1
R642	J707385P184	RES MFLM 1/8W 180K 5%	1
R643	J707385P105	RES MFLM 1/8W 1M0 10%	1
R644	J707385P473	RES MFLM 1/8W 47K 5%	1
R645	J707385P153	RES MFLM 1/8W 15K 5%	1
R646	J707385P393	RES MFLM 1/8W 39K 5%	1
R647	J707385P333	RES MFLM 1/8W 33K 5%	1
R649	J707385P473	RES MFLM 1/8W 47K 5%	1
R650	J707385P562	RES MFLM 1/8W 5K6 5%	1
R651	J707385P473	RES MFLM 1/8W 47K 5%	1
R652	J707385P223	RES MFLM 1/8W 22K 5%	1
R653	J707385P823	RES MFLM 1/8W 82K 5%	1
R654	J707385P153	RES MFLM 1/8W 15K 5%	1
R655	J707385P183	RES MFLM 1/8W 18K 5%	1
R656	J707385P393	RES MFLM 1/8W 39K 5%	1
R657	J707385P823	RES MFLM 1/8W 82K 5%	1
R658	J707385P154	RES MFLM 1/8W 150K 5%	1
R659	J707385P223	RES MFLM 1/8W 22K 5%	1
R660	J707385P333	RES MFLM 1/8W 33K 5%	1
R661	J707385P473	RES MFLM 1/8W 47K 5%	1
R662	J707385P473	RES MFLM 1/8W 47K 5%	1
R663	J708538P6	RES VAR CERM 20K 20%	1
R664	J707385P473	RES MFLM 1/8W 47K 5%	1
R665	J707385P824	RES MFLM 1/8W 820K 5%	1
R666	J707385P124	RES MFLM 1/8W 120K 5%	1
R667	J707385P124	RES MFLM 1/8W 120K 5%	1
R668	J707385P122	RES MFLM 1/8W 1K2 5%	1
R669	J707385P221	RES MFLM 1/8W 220R 5%	1
R670	J707385P103	RES MFLM 1/8W 10K 5%	1
R671	J707385P562	RES MFLM 1/8W 5K6 5%	1
R672	J707385P822	RES MFLM 1/8W 8K2 5%	1
R673	J707385P822	RES MFLM 1/8W 8K2 5%	1
R674	J707385P101	RES MFLM 1/8W 100R 5%	1
R675	J708538P5	RES VAR CERM 10K 20%	1
R676	J707385P562	RES MFLM 1/8W 5K6 5%	1
R677	J708538P5	RES VAR CERM 10K 20%	1
R678	J707385P470	RES MFLM 1/8W 47R 5%	1

Pos	Code No	Description	Qt
R679	J707385P821	RES MFLM 1/8W 820R 5%	1
R680	J708538P6	RES VAR CERM 20K 20%	1
R681	J707385P223	RES MFLM 1/8W 22K 5%	1
R682	J707385P223	RES MFLM 1/8W 22K 5%	1
R683	J707385P223	RES MFLM 1/8W 22K 5%	1
R684	J707385P183	RES MFLM 1/8W 18K 5%	1
R685	J707385P183	RES MFLM 1/8W 18K 5%	1
R686	J707385P103	RES MFLM 1/8W 10K 5%	1
R687	J707385P103	RES MFLM 1/8W 10K 5%	1
R689	J707385P105	RES MFLM 1/8W 1M0 10%	1
R690	J707385P124	RES MFLM 1/8W 120K 5%	1
R691	J707385P273	RES MFLM 1/8W 27K 5%	1
R692	J707385P223	RES MFLM 1/8W 22K 5%	1
R693	J707385P105	RES MFLM 1/8W 1M0 10%	1
R694	J707385P223	RES MFLM 1/8W 22K 5%	1
R695	J707385P105	RES MFLM 1/8W 1M0 10%	1
R696	J707385P223	RES MFLM 1/8W 22K 5%	1
R697	J707385P105	RES MFLM 1/8W 1M0 10%	1
R698	J707385P272	RES MFLM 1/8W 2K7 5%	1
R699	J707385P392	RES MFLM 1/8W 3K9 5%	1
R702	A701250P413	RES MFILM 133K 1% 1/4W	1
R703	A701250P213	RES MFILM 1K33 1% 1/4W	1
R704	A701250P326	RES MFILM 18K2 1% 1/4W	1
R707	J707385P104	RES MFLM 1/8W 100K 5%	1
R708	J707385P105	RES MFLM 1/8W 1M0 10%	1
R709	J707385P181	RES MFLM 1/8W 180R 5%	1
R710	J707385P101	RES MFLM 1/8W 100R 5%	1
R711	J707385P223	RES MFLM 1/8W 22K 5%	1
R712	J707385P154	RES MFLM 1/8W 150K 5%	1
R713	J707385P821	RES MFLM 1/8W 820R 5%	1
R714	J707385P104	RES MFLM 1/8W 100K 5%	1
R715	J707385P563	RES MFLM 1/8W 56K 5%	1
U100	J708165P2	IC LIN OP-AMP 324	1
U201	J708333P1	IC LIN VR FIX 4785	1
U401	J707449P1	IC LIN IF-AMP 3357	1
U402	M905766G1	INT CKT SQ 4002 G1/G2/G5/G4	1
U402	M905766G2	INT CKT SQ 4003 G6/G3	1

DATE: 5/ 8/1987

Pos	Code No	Description	Qt
U601	J707859P1	IC LIN OP-AMP 204	1
U602	J707859P1	IC LIN OP-AMP 204	1
U604	J707859P1	IC LIN OP-AMP 204	1
U606	J707243P1	IC DIG REG 4094	1
U607	J707374P1	IC PLL PRESC 8793	1
U608	B800902P1	IC PLL SYN CUSTOM DES	1
U609	J707859P1	IC LIN OP-AMP 204	1
U610	J708503P2	IC LIN CMPAR LM 339	1
U615	J708621P2	CPLR OPTO PC 827	1
U616	J708503P2	IC LIN CMPAR LM 339	1
W003	J707256P1	COIL FIX	1
W004	J707256P1	COIL FIX	1
W005	J708717P1	STRAP	1
W006	J708716P1	STRAP	1
Y401	J707309P1	CRYSTAL UNIT 20.9450MHZ	1
Y701	J708424P4	CRYSTAL UNIT 7.3978MHZ	1
Z401	J707310P1	FLTR CRY 21.4 +/-7.50KHZ G1/G4	1
Z401	J707310P2	FLTR CRY 21.4 +/-7.50KHZ G2/G5	1
Z401	J707310P3	FLTR CRY 21.4 +/-3.75KHZ G3/G6	1
Z402	J707446P1	FLTR CER 455K +/-10KHZ G1/G4	1
Z402	J707446P3	FLTR CER 455K +/-7.5KHZ G2/G5	1
Z402	J707446P4	FLTR CER 455K +/-4.5KHZ G3/G6	1
Z403	J707446P1	FLTR CER 455K +/-10KHZ G1/G4	1
Z403	J707446P3	FLTR CER 455K +/-7.5KHZ G2/G5	1
Z403	J707446P4	FLTR CER 455K +/-4.5KHZ G3/G6	1
	M905893P1R2	BD PW	1
		NON ELECTRONICAL PARTS	
	J707256P4	COIL FIX	3
	K805776P1	CASTING HEAT SINK	1
	K805569G2	SHIELD METALLIZED	1
	J706281P7	CORE SCREW FERR U 25	8
	J706804P2	WASH INS CRYS FOR HC-18/U	4

Pos	Code No	Description	Qt

DATE: 3/17/1987

Pos	Code No	Description	Qt
C100	J707809P13	CAP CER NPO 10P 5%	1
C101	J707438P4	CAP CER CL2 680P 10%	1
C102	J707438P7	CAP CER CL2 2N2 10%	1
C103	J707436P65	CAP CER NPO 150P 5%	1
C104	J707809P15	CAP CER NPO 15P 5%	1
C105	J707809P17	CAP CER NPO 22P 5%	1
C106	J707809P15	CAP CER NPO 15P 5%	1
C107	J707438P7	CAP CER CL2 2N2 10%	1
C108	J707438P7	CAP CER CL2 2N2 10%	1
C109	J707809P25	CAP CER NPO 100P 5%	1
C110	J707809P23	CAP CER NPO 68P 5% G1/G2/G3	1
C110	J707809P17	CAP CER NPO 22P 5% G4/G5/G6	1
C111	J707438P7	CAP CER CL2 2N2 10%	1
C112	J707438P14	CAP CER CL2 10N 10%	1
C113	J707438P7	CAP CER CL2 2N2 10%	1
C114	J707438P7	CAP CER CL2 2N2 10%	1
C115	J707809P27	CAP CER NPO 150P 5% G1/G2/G3	1
C115	J707809P23	CAP CER NPO 68P 5% G4/G5/G6	1
C116	J707809P27	CAP CER NPO 150P 5% G1/G2/G3	1
C116	J707809P24	CAP CER NPO 82P 5% G4/G5/G6	1
C120	J707353P6	CAP ELECT 4U7 25V	1
C121	J707438P14	CAP CER CL2 10N 10%	1
C122	J707438P7	CAP CER CL2 2N2 10%	1
C123	J707438P14	CAP CER CL2 10N 10%	1
C124	J707438P7	CAP CER CL2 2N2 10%	1
C125	A700006P40	CAP MICA 170P 5% G1/G2/G3	1
C125	A700006P38	CAP MICA 150P 5% G4/G5/G6	1
C126	J709524P59	CAP CER RF 270P 5% G1/G2/G3	1
C126	J709524P49	CAP CER RF 100P 5% G4/G5/G6	1
C127	J709524P51	CAP CER RF 120P 5% G1/G2/G3	1
C127	J709524P45	CAP CER RF 68P 5% G4/G5/G6	1
C128	A700006P35	CAP MICA 110P 5% G1/G2/G3	1
C128	A700006P26	CAP MICA 47P 5% G4/G5/G6	1
C130	J707809P14	CAP CER NPO 12P 5%	1
C131	J707809P9	CAP CER NPO 4P7 .25P	1
C132	J707809P12	CAP CER NPO 8P2 .25P	1
C133	J707809P12	CAP CER NPO 8P2 .25P	1

Pos	Code No	Description	Qt
C134	J707353P6	CAP ELECT 4U7 25V	1
C136	J707438P20	CAP CER CL2 33N 10%	1
C137	J707438P7	CAP CER CL2 2N2 10%	1
C138	J707438P7	CAP CER CL2 2N2 10%	1
C139	J707438P7	CAP CER CL2 2N2 10%	1
C140	J707438P7	CAP CER CL2 2N2 10%	1
C141	J707438P7	CAP CER CL2 2N2 10%	1
C142	A700006P14	CAP MICA 18P 5%	1
C143	A700006P26	CAP MICA 47P 5%	1
C144	A700006P26	CAP MICA 47P 5%	1
C145	A700006P18	CAP MICA 24P 5%	1
C146	J707438P7	CAP CER CL2 2N2 10%	1
C147	J707438P7	CAP CER CL2 2N2 10%	1
C148	J707438P7	CAP CER CL2 2N2 10%	1
C149	J707438P7	CAP CER CL2 2N2 10%	1
C150	J707809P10	CAP CER NPO 5P6 .25P G1/G2/G3	1
C150	J707809P12	CAP CER NPO 5P6 .25P G4/G5/G6	1
C151	J707809P10	CAP CER NPO 5P6 .25P G1/G2/G3	1
C151	J707809P12	CAP CER NPO 5P6 .25P G4/G5/G6	1
C152	J707438P7	CAP CER CL2 2N2 10%	1
C153	J707438P7	CAP CER CL2 2N2 10%	1
C154	J707438P7	CAP CER CL2 2N2 10%	1
C155	J707438P7	CAP CER CL2 2N2 10%	1
C156	J707353P3	CAP ELECT 0U47 50V	1
C157	J707438P7	CAP CER CL2 2N2 10%	1
C158	J707438P7	CAP CER CL2 2N2 10%	1
C159	J707438P14	CAP CER CL2 10N 10%	1
C160	J707436P77	CAP CER NPO 470P 5%	1
C161	J707438P7	CAP CER CL2 2N2 10%	1
C162	J707438P14	CAP CER CL2 10N 10%	1
C163	J707438P20	CAP CER CL2 33N 10%	1
C164	J707438P7	CAP CER CL2 2N2 10%	1
C165	J707809P16	CAP CER NPO 18P 5% G1/G2/G3	1
C165	J707809P17	CAP CER NPO 22P 5% G4/G5/G6	1
C166	J707438P5	CAP CER CL2 1N 10%	1
C167	J707412P13	CAP PYES 470N 10%	1
C168	J707438P7	CAP CER CL2 2N2 10%	1

DATE: 3/17/1987

Pos	Code No	Description	Qt
C169	J707809P1	CAP CER NPO 1P0 .25P	1
C170	J707438P14	CAP CER CL2 10N 10%	1
C171	J707438P14	CAP CER CL2 10N 10%	1
C172	J707438P14	CAP CER CL2 10N 10%	1
C201	J707438P26	CAP CER CL2 100N 10%	1
C202	J707444P8	CAP TA SOL 22U 16V	1
C203	J706005P12	CAP ELECT 47U 40V	1
C204	J707438P7	CAP CER CL2 2N2 10%	1
C205	J707412P9	CAP PYES 100N 10%	1
C206	J707444P4	CAP TA SOL 1U 35V	1
C301	J707436P69	CAP CER NPO 220P 5%	1
C302	J707438P5	CAP CER CL2 1N 10%	1
C304	J707436P10	CAP CER NPO 5P6 .25P	1
C305	J707436P33	CAP CER NPO 27P 5%	1
C306	J707483P4	CAP PHEN 0P56 5%	1
C307	J707438P5	CAP CER CL2 1N 10%	1
C309	J707436P33	CAP CER NPO 27P 5%	1
C310	J707438P5	CAP CER CL2 1N 10%	1
C311	J707436P10	CAP CER NPO 5P6 .25P	1
C312	J707436P87	CAP CER NPO 1N2 5%	1
C315	J707436P10	CAP CER NPO 5P6 .25P	1
C317	J707444P2	CAP TA SOL 0U22 35V	1
C318	J707438P5	CAP CER CL2 1N 10%	1
C319	J707436P33	CAP CER NPO 27P 5%	1
C320	J707438P5	CAP CER CL2 1N 10%	1
C322	J707483P7	CAP PHEN 1P00 5%	1
C323	J707483P6	CAP PHEN 0P82 5%	1
C324	J707436P7	CAP CER NPO 3P3 .25P	1
C325	J707438P5	CAP CER CL2 1N 10%	1
C326	J707436P33	CAP CER NPO 27P 5%	1
C328	J707436P33	CAP CER NPO 27P 5%	1
C331	J707483P6	CAP PHEN 0P82 5%	1
C332	J707436P33	CAP CER NPO 27P 5%	1
C333	J707436P7	CAP CER NPO 3P3 .25P	1
C334	J707436P8	CAP CER NPO 3P9 .25P	1
C335	J707438P5	CAP CER CL2 1N 10%	1
C338	J707436P37	CAP CER NPO 33P 5%	1

Pos	Code No	Description	Qt
C339	J707438P5	CAP CER CL2 1N 10%	1
C340	J707438P8	CAP CER CL2 3N3 10%	1
C345	J707438P5	CAP CER CL2 1N 10%	1
C347	J707438P5	CAP CER CL2 1N 10%	1
C348	J707438P5	CAP CER CL2 1N 10%	1
C350	J707436P10	CAP CER NPO 5P6 .25P	1
C351	J707436P25	CAP CER NPO 18P 5%	1
C353	J707483P8	CAP PHEN 1P20 5%	1
C354	J707436P25	CAP CER NPO 18P 5%	1
C355	J707436P9	CAP CER NPO 4P7 .25P	1
C356	J707438P5	CAP CER CL2 1N 10%	1
C357	J707436P1	CAP CER NPO 1P0 .25P	1
C358	J707436P1	CAP CER NPO 1P0 .25P	1
C359	J707438P5	CAP CER CL2 1N 10%	1
C401	J707438P8	CAP CER CL2 3N3 10%	1
C402	J707438P8	CAP CER CL2 3N3 10%	1
C403	J707438P8	CAP CER CL2 3N3 10%	1
C404	J707436P37	CAP CER NPO 33P 5%	1
C405	J707438P26	CAP CER CL2 100N 10%	1
C406	J707436P10	CAP CER NPO 5P6 .25P	1
C407	J707436P33	CAP CER NPO 27P 5%	1
C408	J707438P5	CAP CER CL2 1N 10%	1
C409	J707438P8	CAP CER CL2 3N3 10%	1
C410	J707444P8	CAP TA SOL 22U 16V	1
C411	J707438P26	CAP CER CL2 100N 10%	1
C412	J707438P26	CAP CER CL2 100N 10%	1
C413	J707436P37	CAP CER NPO 33P 5%	1
C414	J707438P8	CAP CER CL2 3N3 10%	1
C415	J707436P69	CAP CER NPO 220P 5%	1
C416	J707436P61	CAP CER NPO 100P 5%	1
C417	J707436P33	CAP CER NPO 27P 5%	1
C418	J707438P14	CAP CER CL2 10N 10%	1
C419	J707438P26	CAP CER CL2 100N 10%	1
C420	J707438P14	CAP CER CL2 10N 10%	1
C421	J707438P26	CAP CER CL2 100N 10%	1
C422	J707438P26	CAP CER CL2 100N 10%	1
C423	J707436P13	CAP CER NPO 10P 5%	1

DATE: 3/17/1987

Pos	Code No	Description	Qt
C424	J707438P8	CAP CER CL2 3N3 10%	1
C425	J707412P13	CAP PYES 470N 10%	1
C426	J707436P93	CAP CER NPO 2N2 5%	1
C427	J707436P73	CAP CER NPO 330P 5%	1
C428	J707436P73	CAP CER NPO 330P 5%	1
C429	J707438P14	CAP CER CL2 10N 10%	1
C430	J707444P8	CAP TA SOL 22U 16V	1
C431	J707444P8	CAP TA SOL 22U 16V	1
C432	J707438P26	CAP CER CL2 100N 10%	1
C433	J707438P26	CAP CER CL2 100N 10%	1
C434	J707438P8	CAP CER CL2 3N3 10%	1
C435	J707436P1	CAP CER NPO 1P0 .25P	1
C436	J707438P26	CAP CER CL2 100N 10%	1
C437	J707436P45	CAP CER NPO 47P 5%	1
C438	J707438P14	CAP CER CL2 10N 10%	1
C501	J707412P11	CAP PYES 220N 10%	1
C502	J707412P11	CAP PYES 220N 10%	1
C504	A700235P16	CAP CER N150 18P 5%	1
C505	A700235P11	CAP CER N150 6P8 .25P	1
C506	A700235P20	CAP CER N150 39P 5%	1
C507	A700235P19	CAP CER N150 33P 5%	1
C508	A700235P25	CAP CER N150 100P 5%	1
C509	J707436P6	CAP CER NPO 2P7 .25P	1
C512	J707436P5	CAP CER NPO 2P2 .25P	1
C513	J707438P2	CAP CER CL2 330P 10%	1
C514	J707438P6	CAP CER CL2 1N5 10%	1
C517	J707444P6	CAP TA SOL 4U7 35V	1
C518	J707436P2	CAP CER NPO 1P2 .25P	1
C519	J707438P6	CAP CER CL2 1N5 10%	1
C520	J707436P69	CAP CER NPO 220P 5%	1
C521	J707436P29	CAP CER NPO 22P 5%	1
C522	J707438P6	CAP CER CL2 1N5 10%	1
C523	J707436P5	CAP CER NPO 2P2 .25P	1
C524	J707438P3	CAP CER CL2 470P 10%	1
C525	J707438P3	CAP CER CL2 470P 10%	1
C527	J707438P3	CAP CER CL2 470P 10%	1
C528	J707438P26	CAP CER CL2 100N 10%	1

Pos	Code No	Description	Qt
C540	J707438P3	CAP CER CL2 470P 10%	1
C541	J707438P3	CAP CER CL2 470P 10%	1
C543	J707438P3	CAP CER CL2 470P 10%	1
C544	J707438P3	CAP CER CL2 470P 10%	1
C545	J707436P61	CAP CER NPO 100P 5%	1
C601	J707412P11	CAP PYES 220N 10%	1
C602	J707412P11	CAP PYES 220N 10%	1
C603	J707438P26	CAP CER CL2 100N 10%	1
C604	A700235P13	CAP CER N150 10P 5%	1
C605	A700235P10	CAP CER N150 5P6 .25P	1
C606	A700235P38	CAP CER N150 16P 5%	1
C607	A700235P11	CAP CER N150 6P8 .25P	1
C608	A700233P9	CAP CER CL2 2N2 20%	1
C610	J707436P61	CAP CER NPO 100P 5%	1
C611	J707436P6	CAP CER NPO 2P7 .25P	1
C612	J707438P6	CAP CER CL2 1N5 10%	1
C613	J707444P6	CAP TA SOL 4U7 35V	1
C614	J707438P6	CAP CER CL2 1N5 10%	1
C615	J707438P10	CAP CER CL2 4N7 10%	1
C616	J707438P4	CAP CER CL2 680P 10%	1
C617	J707436P49	CAP CER NPO 56P 5%	1
C618	J707436P1	CAP CER NPO 1P0 .25P	1
C619	J707438P6	CAP CER CL2 1N5 10%	1
C620	J707436P61	CAP CER NPO 100P 5%	1
C621	J707436P21	CAP CER NPO 15P 5%	1
C622	J707436P5	CAP CER NPO 2P2 .25P	1
C623	J707438P26	CAP CER CL2 100N 10%	1
C624	J707436P61	CAP CER NPO 100P 5%	1
C625	J707438P6	CAP CER CL2 1N5 10%	1
C626	J707438P5	CAP CER CL2 1N 10%	1
C627	J707438P26	CAP CER CL2 100N 10%	1
C628	J707436P3	CAP CER NPO 1P5 .25P	1
C629	J707436P65	CAP CER NPO 150P 5%	1
C630	J707438P26	CAP CER CL2 100N 10%	1
C631	J707438P6	CAP CER CL2 1N5 10%	1
C632	J707444P6	CAP TA SOL 4U7 35V	1
C633	J707444P17	CAP TA SOL 47U 10V	1

DATE: 3/17/1987

Pos	Code No	Description	Qt
C634	J707438P26	CAP CER CL2 100N 10%	1
C635	J707438P1	CAP CER CL2 220P 10%	1
C636	J707444P17	CAP TA SOL 47U 10V	1
C637	J707438P26	CAP CER CL2 100N 10%	1
C638	J707438P5	CAP CER CL2 1N 10%	1
C639	J707438P8	CAP CER CL2 3N3 10%	1
C640	J707412P8	CAP PYES 68N 10%	1
C641	J707412P13	CAP PYES 470N 10%	1
C642	J707412P13	CAP PYES 470N 10%	1
C643	J707438P26	CAP CER CL2 100N 10%	1
C644	J707436P6	CAP CER NPO 2P7 .25P	1
C645	J707436P25	CAP CER NPO 18P 5%	1
C646	J707436P63	CAP CER NPO 120P 5%	1
C647	J707436P13	CAP CER NPO 10P 5%	1
C652	J707438P22	CAP CER CL2 47N 10%	1
C653	J707444P6	CAP TA SOL 4U7 35V	1
C656	J707438P3	CAP CER CL2 470P 10%	1
C657	J707438P3	CAP CER CL2 470P 10%	1
C659	J707438P5	CAP CER CL2 1N 10%	1
C660	J707438P14	CAP CER CL2 10N 10%	1
C666	J707438P3	CAP CER CL2 470P 10%	1
C667	J707438P3	CAP CER CL2 470P 10%	1
C701	J707436P29	CAP CER NPO 22P 5%	1
C702	J708702P22	CAP CER N750 56P 5%	1
C703	J707436P69	CAP CER NPO 220P 5%	1
C705	J707438P5	CAP CER CL2 1N 10%	1
C706	J707438P14	CAP CER CL2 10N 10%	1
C707	J707436P10	CAP CER NPO 5P6 .25P	1
C708	J707438P14	CAP CER CL2 10N 10%	1
C709	J707438P14	CAP CER CL2 10N 10%	1
D100	A700047P3	DIO SI SIG 1N6263	1
D101	J706892P1	DIO SI PIN UM 9401	1
D102	J706892P1	DIO SI PIN UM 9401	1
D103	J707390P1	DIO SI SIG BAV 74	1
D300	J707928P2	DIO SI CAP BB 809	1
D301	J707928P2	DIO SI CAP BB 809	1
D302	J707928P2	DIO SI CAP BB 809	1

Pos	Code No	Description	Qt
D303	J707928P2	DIO SI CAP BB 809	1
D304	J707928P2	DIO SI CAP BB 809	1
D305	J707928P2	DIO SI CAP BB 809	1
D306	J707928P2	DIO SI CAP BB 809	1
D307	J707928P2	DIO SI CAP BB 809	1
D401	A700025P8	DIO SI ZENR 6V8 5% 0.4W	1
D501	J707928P2	DIO SI CAP BB 809	1
D502	J707928P2	DIO SI CAP BB 809	1
D503	J707928P2	DIO SI CAP BB 809	1
D504	J707928P2	DIO SI CAP BB 809	1
D505	J707928P2	DIO SI CAP BB 809	1
D506	J707397P1	DIO SI CAP BBY 40	1
D601	J707928P2	DIO SI CAP BB 809	1
D602	J707928P2	DIO SI CAP BB 809	1
D603	J709536P1	DIO SI CAP MV 2111	1
D604	J709536P1	DIO SI CAP MV 2111	1
D605	J707389P1	DIO SI SIG BAV 99	1
D606	J708681P1	DIO SI SIG BAW 56	1
D607	J707390P1	DIO SI SIG BAV 74	1
D608	J707390P1	DIO SI SIG BAV 74	1
D610	J708681P1	DIO SI SIG BAW 56	1
D701	A700073P1	DIO SI CAP BB 409	1
D702	J707390P1	DIO SI SIG BAV 74	1
L100	K805653G9	COIL ASM 9 1/2T	1
L101	A700024P7	COIL RF FIX 0.33UH 10%	1
L102	A700024P3	COIL RF FIX 0.15UH 10%	1
L103	A700024P12	COIL RF FIX 0.82UH 10%	1
L104	K805653G2	COIL ASM 2 1/2T	1
L105	K805653G5	COIL ASM 5 1/2T G1/G2/G3	1
L105	K805653G8	COIL ASM 8 1/2T G4/G5/G6	1
L106	J707339G1	COIL FIX ASM	1
L107	K805653G4	COIL ASM 4 1/2T	1
L108	A700024P3	COIL RF FIX 0.15UH 10%	1
L109	J707256P2	COIL FIX	1
L110	J709287P1	CORE TOR FERR	1
L111	J707256P1	COIL FIX G1/G2/G3	1
L111	J707256G1	COIL ASM 1 1/2T G4/G5/G6	1

DATE: 3/17/1987

Pos	Code No	Description	Qt
L113	A700024P3	COIL RF FIX 0.15UH 10%	1
L114	J709287P1	CORE TOR FERR	1
L115	J707256P2	COIL FIX	1
L116	J709287P1	CORE TOR FERR	1
L117	J709603P2	COIL G1/G2/G3	1
L117	J709603P6	COIL ASM 1 1/2T G4/G5/G6	1
L118	J709603P1	COIL G1/G2/G3	1
L118	J709603P6	COIL FIX G4/G5/G6	1
L121	A700024P18	COIL RF FIX 2.7UH 10%	1
L122	A700024P25	COIL RF FIX 10UH 10%	1
L123	A700024P25	COIL RF FIX 10UH 10%	1
L124	K805653G7	COIL ASM 7 1/2 T	1
L125	K805653G7	COIL ASM 7 1/2 T	1
L126	K805653G9	COIL ASM 9 1/2T	1
L127	A700024P25	COIL RF FIX 10UH 10%	1
L128	A700024P25	COIL RF FIX 10UH 10%	1
L301	J709099P8	COIL RF VAR 7-1/2T	1
L302	J709099P15	COIL RF VAR 7-1/2T TAP	1
L303	J707486P11	COIL RF FIX 2.2UH 10%	1
L304	J709099P8	COIL RF VAR 7-1/2T	1
L305	J707486P2	COIL RF FIX 3.3UH 10%	1
L306	J709099P8	COIL RF VAR 7-1/2T	1
L308	J709099P8	COIL RF VAR 7-1/2T	1
L310	J709099P9	COIL RF VAR 7-1/2T TAP	1
L312	J708428P1	COIL RF VAR 45 MHZ	1
L313	J709099P12	COIL RF VAR 5-1/2T TAP	1
L314	J709099P14	COIL RF VAR 5-1/2T TAP	1
L401	J707486P3	COIL RF FIX 6.8UH 10%	1
L403	K805570G6	COIL AS M	1
L405	J708428P1	COIL RF VAR 45 MHZ	1
L406	K805570G5	COIL ASM	1
L407	A700024P25	COIL RF FIX 10UH 10%	1
L408	J708428P1	COIL RF VAR 45 MHZ	1
L409	J707431P1	COIL RF VAR 455KHZ 25%	1
L410	J707431P1	COIL RF VAR 455KHZ 25%	1
L501	A700024P21	COIL RF FIX 4.7UH 10%	1
L502	A700024P21	COIL RF FIX 4.7UH 10%	1

Pos	Code No	Description	Qt
L504	A700024P21	COIL RF FIX 4.7UH 10%	1
L505	L855671P2	COIL RADIO FREQUENCY	1
L506	A700024P21	COIL RF FIX 4.7UH 10%	1
L508	A700024P5	COIL RF FIX 0.22UH 10%	1
L601	A700024P21	COIL RF FIX 4.7UH 10%	1
L602	A700024P21	COIL RF FIX 4.7UH 10%	1
L604	A700024P21	COIL RF FIX 4.7UH 10%	1
L605	L855671P2	COIL RA DIO FREQUENCY	1
L606	A700024P21	COIL RF FIX 4.7UH 10%	1
L607	A700024P4	COIL RF FIX 0.18UH 10%	1
L608	A700024P5	COIL RF FIX 0.22UH 10%	1
L701	K805570G7	COIL ASM	1
L702	A700024P43	COIL RF FIX 330UH 10%	1
L703	A700024P27	COIL RF FIX 15UH 10%	1
P102	J707064P112	CONN PWB FEM 12-CKT	1
P105	A701883P4	CONN PWB FEM RECP	1
Q100	J707388P1	TSTR NPN SI BFR 53	1
Q101	A701940P1	TSTR NPN SI RF-PWR 0.4W	1
Q102	J709517P1	TSTR NPN SI RF-PWR 3W	1
Q103	J709162P1	TSTR NPN SI RF-PWR 27W G1/G2/G3	1
Q103	J709163P1	TSTR NPN SI RF-PWR 10W G4/G5/G6	1
Q106	J707432P1	TSTR PNP SI BCX 18	1
Q107	J707386P1	TSTR NPN SI BCW 32	1
Q108	J708406P1	TSTR NPN SI BD 233	1
Q109	J707386P1	TSTR NPN SI BCW 32	1
Q201	J707435P1	TSTR PNP SI BC 369	1
Q202	J707386P1	TSTR NPN SI BCW 32	1
Q203	J707432P1	TSTR PNP SI BCX 18	1
Q204	J707386P1	TSTR NPN SI BCW 32	1
Q301	J706011P2	TSTR NPN SI BFR 91A	1
Q302	J707817P1	TSTR JFET SI J 309	1
Q401	J707817P1	TSTR JFET SI J 309	1
Q402	J707817P1	TSTR JFET SI J 309	1
Q403	J707419P1	TSTR JFET SI BF511	1
Q404	J708418P1	TSTR NPN SI BFS 20	1
Q405	J708418P1	TSTR NPN SI BFS 20	1
Q406	J708418P1	TSTR NPN SI BFS 20	1

DATE: 3/17/1987

Pos	Code No	Description	Qt
Q407	J707386P1	TSTR NPN SI BCW 32	1
Q408	J707387P1	TSTR PNP SI BCW 30	1
Q501	J707817P1	TSTR JFET SI J 309	1
Q502	J708318P1	TSTR PNP SI BFT 92	1
Q601	J707817P1	TSTR JFET SI J 309	1
Q603	J708318P1	TSTR PNP SI BFT 92	1
Q604	J707433P1	TSTR MFET SI BF 989	1
Q605	J707386P1	TSTR NPN SI BCW 32	1
Q612	J707386P1	TSTR NPN SI BCW 32	1
Q613	J707386P1	TSTR NPN SI BCW 32	1
Q701	J707419P1	TSTR JFET SI BF511	1
Q702	J707387P1	TSTR PNP SI BCW 30	1
R000	J707385P332	RES MFLM 1/8W 3K3 5% G4/G5/G6	1
R100	J707385P101	RES MFLM 1/8W 100R 5%	1
R101	J707385P470	RES MFLM 1/8W 47R 5%	1
R102	J707385P471	RES MFLM 1/8W 470R 5%	1
R103	J707385P390	RES MFLM 1/8W 39R 5%	1
R104	J707385P331	RES MFLM 1/8W 330R 5%	1
R105	J707385P122	RES MFLM 1/8W 1K2 5%	1
R106	J707385P100	RES MFLM 1/8W 10R 5%	1
R107	J707385P100	RES MFLM 1/8W 10R 5%	1
R108	J707385P560	RES MFLM 1/8W 56R 5%	1
R109	J707385P100	RES MFLM 1/8W 10R 5%	1
R110	J707385P910	RES MFLM 1/8W 1R0 20%	1
R111	J707385P220	RES MFLM 1/8W 22R 5%	1
R112	J707385P947	RES MFLM 1/8W 4R7 20%	1
R113	J707385P100	RES MFLM 1/8W 10R 5%	1
R114	J707385P910	RES MFLM 1/8W 1R0 20% G1/G2/G3	1
R114	J707385P918	RES MFLM 1/8W 1R8 20% G4/G5/G6	1
R115	J707385P910	RES MFLM 1/8W 1R0 20% G1/G2/G3	1
R115	J707385P918	RES MFLM 1/8W 1R8 20% G4/G5/G6	1
R116	J707385P121	RES MFLM 1/8W 120R 5%	1
R117	J707385P220	RES MFLM 1/8W 22R 5%	1
R118	J707385P473	RES MFLM 1/8W 47K 5%	1
R119	J707385P820	RES MFLM 1/8W 82R 5%	1
R120	J707385P820	RES MFLM 1/8W 82R 5%	1
R121	J707385P333	RES MFLM 1/8W 33K 5%	1

Pos	Code No	Description	Qt
R122	J707385P221	RES MFLM 1/8W 220R 5%	1
R123	J707385P221	RES MFLM 1/8W 220R 5%	1
R124	J707385P101	RES MFLM 1/8W 100R 5% G1/G2/G3	1
R124	J707385P221	RES MFLM 1/8W 220R 5% G4/G5/G6	1
R125	J707385P330	RES MFLM 1/8W 33R 5%	1
R126	J707385P330	RES MFLM 1/8W 33R 5%	1
R127	J707385P330	RES MFLM 1/8W 33R 5%	1
R128	J707385P100	RES MFLM 1/8W 10R 5%	1
R129	J707385P121	RES MFLM 1/8W 120R 5% G1/G2/G3	1
R129	J707385P560	RES MFLM 1/8W 56R 5% G4/G5/G6	1
R130	J707385P121	RES MFLM 1/8W 120R 5% G1/G2/G3	1
R130	J707385P560	RES MFLM 1/8W 56R 5% G4/G5/G6	1
R131	J707385P392	RES MFLM 1/8W 3K9 5%	1
R132	J708538P9	RES VAR CERM 200K 20%	1
R133	J708538P4	RES VAR CERM 5K0 20%	1
R134	J707385P100	RES MFLM 1/8W 10R 5%	1
R135	J706147P2	RES THERM PTC 80R 25%	1
R136	J707385P682	RES MFLM 1/8W 6K8 5%	1
R137	J707385P223	RES MFLM 1/8W 22K 5%	1
R138	J707385P472	RES MFLM 1/8W 4K7 5%	1
R139	J707385P472	RES MFLM 1/8W 4K7 5%	1
R140	J707385P333	RES MFLM 1/8W 33K 5%	1
R141	J707385P333	RES MFLM 1/8W 33K 5%	1
R142	J707385P104	RES MFLM 1/8W 100K 5%	1
R143	J707385P222	RES MFLM 1/8W 2K2 5%	1
R144	J707385P222	RES MFLM 1/8W 2K2 5%	1
R145	J707385P223	RES MFLM 1/8W 22K 5%	1
R146	J707385P104	RES MFLM 1/8W 100K 5%	1
R147	J707385P104	RES MFLM 1/8W 100K 5%	1
R148	J707385P123	RES MFLM 1/8W 12K 5%	1
R149	J707385P472	RES MFLM 1/8W 4K7 5%	1
R150	J707385P102	RES MFLM 1/8W 1K0 5%	1
R151	J707385P683	RES MFLM 1/8W 68K 5%	1
R152	J707385P104	RES MFLM 1/8W 100K 5%	1
R153	J707385P472	RES MFLM 1/8W 4K7 5%	1
R154	J707385P274	RES MFLM 1/8W 270K 5%	1
R155	J707385P682	RES MFLM 1/8W 6K8 5%	1

DATE: 3/17/1987

Pos	Code No	Description	Qt
R156	J707385P102	RES MFLM 1/8W 1KO 5%	1
R157	J707385P100	RES MFLM 1/8W 10R 5%	1
R158	J707385P102	RES MFLM 1/8W 1KO 5%	1
R159	J707385P472	RES MFLM 1/8W 4K7 5%	1
R160	J707385P104	RES MFLM 1/8W 100K 5%	1
R161	J709725P1	RES THERM PTC 1KO	1
R162	J707385P220	RES MFLM 1/8W 22R 5%	1
R201	J707385P561	RES MFLM 1/8W 560R 5%	1
R202	J707385P271	RES MFLM 1/8W 270R 5%	1
R203	J707385P153	RES MFLM 1/8W 15K 5%	1
R204	J707385P153	RES MFLM 1/8W 15K 5%	1
R205	J707385P472	RES MFLM 1/8W 4K7 5%	1
R206	J707385P272	RES MFLM 1/8W 2K7 5%	1
R207	J707385P563	RES MFLM 1/8W 56K 5%	1
R208	J707385P563	RES MFLM 1/8W 56K 5%	1
R209	J707385P271	RES MFLM 1/8W 270R 5%	1
R210	J707385P331	RES MFLM 1/8W 330R 5%	1
R301	J707385P331	RES MFLM 1/8W 330R 5%	1
R302	J707385P392	RES MFLM 1/8W 3K9 5%	1
R303	J707385P104	RES MFLM 1/8W 100K 5%	1
R304	J707385P104	RES MFLM 1/8W 100K 5%	1
R306	J707385P272	RES MFLM 1/8W 2K7 5%	1
R307	J707385P681	RES MFLM 1/8W 680R 5%	1
R308	J707385P470	RES MFLM 1/8W 47R 5%	1
R309	J707385P270	RES MFLM 1/8W 27R 5%	1
R310	J707385P104	RES MFLM 1/8W 100K 5%	1
R311	J707385P101	RES MFLM 1/8W 100R 5%	1
R312	J707385P104	RES MFLM 1/8W 100K 5%	1
R313	J707385P123	RES MFLM 1/8W 12K 5%	1
R314	J707385P104	RES MFLM 1/8W 100K 5%	1
R315	J707385P822	RES MFLM 1/8W 8K2 5%	1
R316	J707385P104	RES MFLM 1/8W 100K 5%	1
R317	J707385P471	RES MFLM 1/8W 470R 5%	1
R318	J707385P100	RES MFLM 1/8W 10R 5%	1
R319	J707385P101	RES MFLM 1/8W 100R 5%	1
R320	J707385P222	RES MFLM 1/8W 2K2 5%	1
R321	J707385P270	RES MFLM 1/8W 27R 5%	1

Pos	Code No	Description	Qt
R322	J707385P471	RES MFLM 1/8W 470R 5%	1
R323	J707385P104	RES MFLM 1/8W 100K 5%	1
R324	J707385P104	RES MFLM 1/8W 100K 5%	1
R325	J707385P100	RES MFLM 1/8W 10R 5%	1
R327	J707385P123	RES MFLM 1/8W 12K 5%	1
R328	J707385P332	RES MFLM 1/8W 3K3 5%	1
R329	J707385P102	RES MFLM 1/8W 1KO 5%	1
R401	J707385P390	RES MFLM 1/8W 39R 5%	1
R402	J707385P100	RES MFLM 1/8W 10R 5%	1
R403	J707385P222	RES MFLM 1/8W 2K2 5%	1
R404	J707385P472	RES MFLM 1/8W 4K7 5%	1
R405	J707385P100	RES MFLM 1/8W 10R 5%	1
R406	J707385P820	RES MFLM 1/8W 82R 5%	1
R407	J707385P470	RES MFLM 1/8W 47R 5%	1
R408	J707385P470	RES MFLM 1/8W 47R 5%	1
R409	J707385P332	RES MFLM 1/8W 3K3 5%	1
R410	J707385P471	RES MFLM 1/8W 470R 5%	1
R411	J707385P123	RES MFLM 1/8W 12K 5%	1
R412	J707385P472	RES MFLM 1/8W 4K7 5%	1
R413	J707385P821	RES MFLM 1/8W 820R 5%	1
R414	J707385P332	RES MFLM 1/8W 3K3 5%	1
R415	J707385P222	RES MFLM 1/8W 2K2 5%	1
R416	J707385P562	RES MFLM 1/8W 5K6 5%	1
R417	J707385P103	RES MFLM 1/8W 10K 5%	1
R418	J707385P153	RES MFLM 1/8W 15K 5%	1
R419	J707385P182	RES MFLM 1/8W 1K8 5%	1
R420	J707385P182	RES MFLM 1/8W 1K8 5%	1
R421	J707385P182	RES MFLM 1/8W 1K8 5%	1
R422	J707385P473	RES MFLM 1/8W 47K 5%	1
R423	J707385P153	RES MFLM 1/8W 15K 5%	1
R424	J708538P5	RES VAR CERM 10K 20%	1
R425	J707385P272	RES MFLM 1/8W 2K7 5%	1
R426	J707385P563	RES MFLM 1/8W 56K 5%	1
R427	J707385P273	RES MFLM 1/8W 27K 5%	1
R428	J707385P683	RES MFLM 1/8W 68K 5%	1
R429	J707385P104	RES MFLM 1/8W 100K 5%	1
R430	J707385P334	RES MFLM 1/8W 330K 5%	1

DATE: 3/17/1987

Pos	Code No	Description	Qt
R431	J707385P473	RES MFLM 1/8W 47K 5%	1
R432	J707385P473	RES MFLM 1/8W 47K 5%	1
R433	J707385P271	RES MFLM 1/8W 270R 5%	1
R434	J707385P102	RES MFLM 1/8W 1K0 5%	1
R435	J706147P3	RES THERM PTC 250R 25%	1
R436	J707385P392	RES MFLM 1/8W 3K9 5%	1
R437	J707406P7	RES THERM NTC 220R 10%	1
R438	J707385P222	RES MFLM 1/8W 2K2 5%	1
R439	J707385P392	RES MFLM 1/8W 3K9 5%	1
R440	J707385P392	RES MFLM 1/8W 3K9 5%	1
R441	J707385P101	RES MFLM 1/8W 100R 5%	1
R442	J708538P6	RES VAR CERM 20K 20%	1
R444	J707385P473	RES MFLM 1/8W 47K 5%	1
R445	J707385P273	RES MFLM 1/8W 27K 5%	1
R446	J707385P224	RES MFLM 1/8W 220K 5%	1
R447	J707385P392	RES MFLM 1/8W 3K9 5%	1
R448	J707385P101	RES MFLM 1/8W 100R 5%	1
R449	J707385P470	RES MFLM 1/8W 47R 5%	1
R450	J707385P103	RES MFLM 1/8W 10K 5%	1
R452	J707385P332	RES MFLM 1/8W 3K3 5%	1
R501	J707385P821	RES MFLM 1/8W 820R 5%	1
R502	J707385P821	RES MFLM 1/8W 820R 5%	1
R504	J707385P104	RES MFLM 1/8W 100K 5%	1
R505	J707385P104	RES MFLM 1/8W 100K 5%	1
R508	J707385P103	RES MFLM 1/8W 10K 5%	1
R509	J707385P151	RES MFLM 1/8W 150R 5%	1
R510	J707385P103	RES MFLM 1/8W 10K 5%	1
R512	J707385P561	RES MFLM 1/8W 560R 5%	1
R513	J707385P272	RES MFLM 1/8W 2K7 5%	1
R514	J707385P682	RES MFLM 1/8W 6K8 5%	1
R515	J707385P221	RES MFLM 1/8W 220R 5%	1
R516	J707385P221	RES MFLM 1/8W 220R 5%	1
R517	J707385P101	RES MFLM 1/8W 100R 5%	1
R518	J707385P100	RES MFLM 1/8W 10R 5%	1
R529	J707385P392	RES MFLM 1/8W 3K9 5%	1
R602	J707385P122	RES MFLM 1/8W 1K2 5%	1
R603	J707385P122	RES MFLM 1/8W 1K2 5%	1

Pos	Code No	Description	Qt
R605	J707385P104	RES MFLM 1/8W 100K 5%	1
R606	J707385P104	RES MFLM 1/8W 100K 5%	1
R607	J707385P561	RES MFLM 1/8W 560R 5%	1
R608	J707385P682	RES MFLM 1/8W 6K8 5%	1
R609	J707385P332	RES MFLM 1/8W 3K3 5%	1
R610	J707385P331	RES MFLM 1/8W 330R 5%	1
R611	J707385P151	RES MFLM 1/8W 150R 5%	1
R612	J707385P102	RES MFLM 1/8W 1K0 5%	1
R613	J707385P101	RES MFLM 1/8W 100R 5%	1
R614	J707385P272	RES MFLM 1/8W 2K7 5%	1
R615	J707385P682	RES MFLM 1/8W 6K8 5%	1
R616	J707385P181	RES MFLM 1/8W 180R 5%	1
R617	J707385P563	RES MFLM 1/8W 56K 5%	1
R618	J707385P683	RES MFLM 1/8W 68K 5%	1
R619	J707385P104	RES MFLM 1/8W 100K 5%	1
R620	J707385P102	RES MFLM 1/8W 1K0 5%	1
R621	J707385P471	RES MFLM 1/8W 470R 5%	1
R622	J707385P151	RES MFLM 1/8W 150R 5%	1
R623	J707385P224	RES MFLM 1/8W 220K 5%	1
R624	J707385P223	RES MFLM 1/8W 22K 5%	1
R625	J707385P101	RES MFLM 1/8W 100R 5%	1
R626	J707385P100	RES MFLM 1/8W 10R 5%	1
R627	J707385P103	RES MFLM 1/8W 10K 5%	1
R628	J707385P224	RES MFLM 1/8W 220K 5%	1
R629	J707385P124	RES MFLM 1/8W 120K 5%	1
R630	J707385P100	RES MFLM 1/8W 10R 5%	1
R631	J707385P684	RES MFLM 1/8W 680K 5%	1
R632	J707385P223	RES MFLM 1/8W 22K 5%	1
R633	J707385P824	RES MFLM 1/8W 820K 5%	1
R634	J707385P123	RES MFLM 1/8W 12K 5%	1
R635	J707385P102	RES MFLM 1/8W 1K0 5%	1
R636	J707385P332	RES MFLM 1/8W 3K3 5%	1
R637	J707385P181	RES MFLM 1/8W 180R 5%	1
R638	J707385P474	RES MFLM 1/8W 470K 5%	1
R639	J707385P333	RES MFLM 1/8W 33K 5%	1
R640	J707385P105	RES MFLM 1/8W 1M0 10%	1
R641	J707385P184	RES MFLM 1/8W 180K 5%	1

DATE: 3/17/1987

Pos	Code No	Description	Qt
R642	J707385P184	RES MFLM 1/8W 180K 5%	1
R643	J707385P105	RES MFLM 1/8W 1MO 10%	1
R644	J707385P473	RES MFLM 1/8W 47K 5%	1
R645	J707385P153	RES MFLM 1/8W 15K 5%	1
R646	J707385P393	RES MFLM 1/8W 39K 5%	1
R647	J707385P333	RES MFLM 1/8W 33K 5%	1
R649	J707385P473	RES MFLM 1/8W 47K 5%	1
R650	J707385P562	RES MFLM 1/8W 5K6 5%	1
R651	J707385P473	RES MFLM 1/8W 47K 5%	1
R652	J707385P223	RES MFLM 1/8W 22K 5%	1
R653	J707385P823	RES MFLM 1/8W 82K 5%	1
R654	J707385P153	RES MFLM 1/8W 15K 5%	1
R655	J707385P183	RES MFLM 1/8W 18K 5%	1
R656	J707385P393	RES MFLM 1/8W 39K 5%	1
R657	J707385P823	RES MFLM 1/8W 82K 5%	1
R658	J707385P154	RES MFLM 1/8W 150K 5%	1
R659	J707385P223	RES MFLM 1/8W 22K 5%	1
R660	J707385P333	RES MFLM 1/8W 33K 5%	1
R661	J707385P473	RES MFLM 1/8W 47K 5%	1
R662	J707385P473	RES MFLM 1/8W 47K 5%	1
R663	J708538P6	RES VAR CERM 20K 20%	1
R664	J707385P473	RES MFLM 1/8W 47K 5%	1
R665	J707385P824	RES MFLM 1/8W 820K 5%	1
R666	J707385P124	RES MFLM 1/8W 120K 5%	1
R667	J707385P124	RES MFLM 1/8W 120K 5%	1
R668	J707385P122	RES MFLM 1/8W 1K2 5%	1
R669	J707385P221	RES MFLM 1/8W 220R 5%	1
R670	J707385P103	RES MFLM 1/8W 10K 5%	1
R671	J707385P562	RES MFLM 1/8W 5K6 5%	1
R672	J707385P822	RES MFLM 1/8W 8K2 5%	1
R673	J707385P822	RES MFLM 1/8W 8K2 5%	1
R674	J707385P101	RES MFLM 1/8W 100R 5%	1
R675	J708538P5	RES VAR CERM 10K 20%	1
R676	J707385P562	RES MFLM 1/8W 5K6 5%	1
R677	J708538P5	RES VAR CERM 10K 20%	1
R678	J707385P470	RES MFLM 1/8W 47R 5%	1
R679	J707385P821	RES MFLM 1/8W 820R 5%	1

Pos	Code No	Description	Qt
R680	J708538P6	RES VAR CERM 20K 20%	1
R681	J707385P223	RES MFLM 1/8W 22K 5%	1
R682	J707385P223	RES MFLM 1/8W 22K 5%	1
R683	J707385P223	RES MFLM 1/8W 22K 5%	1
R684	J707385P183	RES MFLM 1/8W 18K 5%	1
R685	J707385P183	RES MFLM 1/8W 18K 5%	1
R686	J707385P103	RES MFLM 1/8W 10K 5%	1
R687	J707385P103	RES MFLM 1/8W 10K 5%	1
R689	J707385P105	RES MFLM 1/8W 1MO 10%	1
R690	J707385P124	RES MFLM 1/8W 120K 5%	1
R691	J707385P273	RES MFLM 1/8W 27K 5%	1
R692	J707385P223	RES MFLM 1/8W 22K 5%	1
R693	J707385P105	RES MFLM 1/8W 1MO 10%	1
R694	J707385P223	RES MFLM 1/8W 22K 5%	1
R695	J707385P105	RES MFLM 1/8W 1MO 10%	1
R696	J707385P223	RES MFLM 1/8W 22K 5%	1
R697	J707385P105	RES MFLM 1/8W 1MO 10%	1
R698	J707385P272	RES MFLM 1/8W 2K7 5%	1
R699	J707385P392	RES MFLM 1/8W 3K9 5%	1
R702	A701250P413	RES MFILM 133K 1% 1/4W	1
R703	A701250P213	RES MFILM 1K33 1% 1/4W	1
R704	A701250P326	RES MFILM 18K2 1% 1/4W	1
R707	J707385P104	RES MFLM 1/8W 100K 5%	1
R708	J707385P105	RES MFLM 1/8W 1MO 10%	1
R709	J707385P181	RES MFLM 1/8W 180R 5%	1
R710	J707385P101	RES MFLM 1/8W 100R 5%	1
R711	J707385P223	RES MFLM 1/8W 22K 5%	1
R712	J707385P154	RES MFLM 1/8W 150K 5%	1
R713	J707385P821	RES MFLM 1/8W 820R 5%	1
R714	J707385P104	RES MFLM 1/8W 100K 5%	1
R715	J707385P563	RES MFLM 1/8W 56K 5%	1
U100	J708165P2	IC LIN OP-AMP 324	1
U201	J708333P1	IC LIN VR FIX 4785	1
U401	J707449P1	IC LIN IF-AMP 3357	1
U402	M905766G1	INT CKT SQ 4002 G1/G2/G5/G4	1
U402	M905766G2	INT CKT SQ 4003 G6/G3	1
U601	J707859P1	IC LIN OP-AMP 204	1

DATE: 3/17/1987

Pos	Code No	Description	Qt
U602	J707859P1	IC LIN OP-AMP 204	1
U604	J707859P1	IC LIN OP-AMP 204	1
U606	J707243P1	IC DIG REG 4094	1
U607	J707374P1	IC PLL PRESC 8793	1
U608	B800902P1	IC PLL SYN CUSTOM DES	1
U609	J707859P1	IC LIN OP-AMP 204	1
U610	J708503P2	IC LIN CMPAR LM 339	1
U615	J708621P2	CPLR OPTO PC 827	1
U616	J708503P2	IC LIN CMPAR LM 339	1
W003	J707256P1	COIL FIX	1
W004	J707256P1	COIL FIX	1
W005	J708717P1	STRAP	1
W006	J708716P1	STRAP	1
Y401	J707309P1	CRYSTAL UNIT 20.9450MHZ	1
Y701	J708424P4	CRYSTAL UNIT 7.3978MHZ	1
Z401	J707310P1	FLTR CRY 21.4 +/-7.50KHZ G1/G4	1
Z401	J707310P2	FLTR CRY 21.4 +/-7.50KHZ G2/G5	1
Z401	J707310P3	FLTR CRY 21.4 +/-3.75KHZ G3/G6	1
Z402	J707446P1	FLTR CER 455K +/-10KHZ G1/G4	1
Z402	J707446P3	FLTR CER 455K +/-7.5KHZ G2/G5	1
Z402	J707446P4	FLTR CER 455K +/-4.5KHZ G3/G6	1
Z403	J707446P1	FLTR CER 455K +/-10KHZ G1/G4	1
Z403	J707446P3	FLTR CER 455K +/-7.5KHZ G2/G5	1
Z403	J707446P4	FLTR CER 455K +/-4.5KHZ G3/G6	1
	M905893P1R2	BD PW	1
		NON ELECTRONICAL PARTS	
	J707256P4	COIL FIX	3
	K805776P1	CASTING HEAT SINK	1
	K805569G2	SHIELD METALLIZED	1
	J706281P7	CORE SCREW FERR U 25	8
	J706804P2	WASH INS CRYS FOR HC-18/U	4

Pos	Code No	Description	Qt

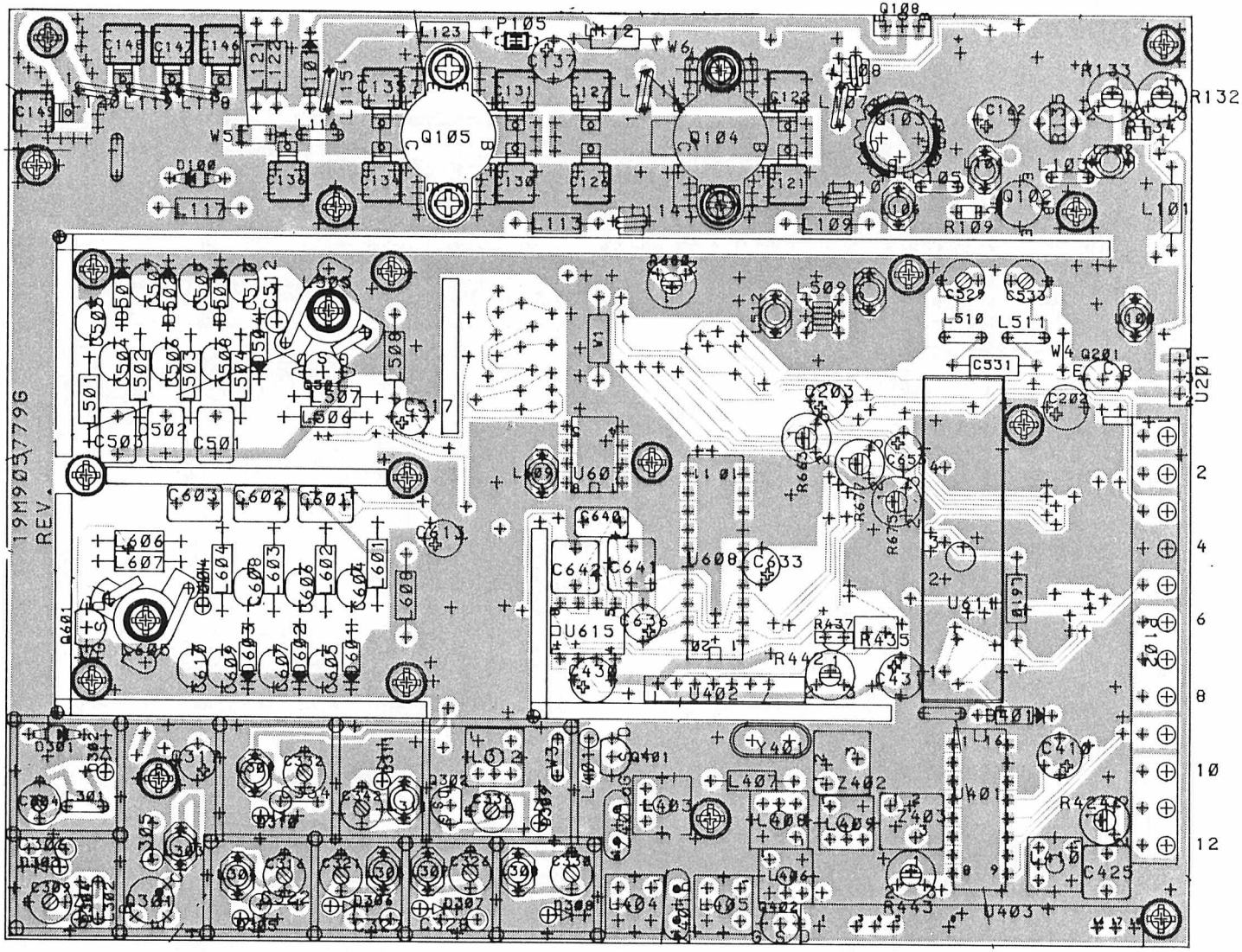

SIMPLEX
RADIO FREQUENCY-UNIT RF6660
COMPONENT LAYOUT- COMPONENT SIDE

D40[illegible]99

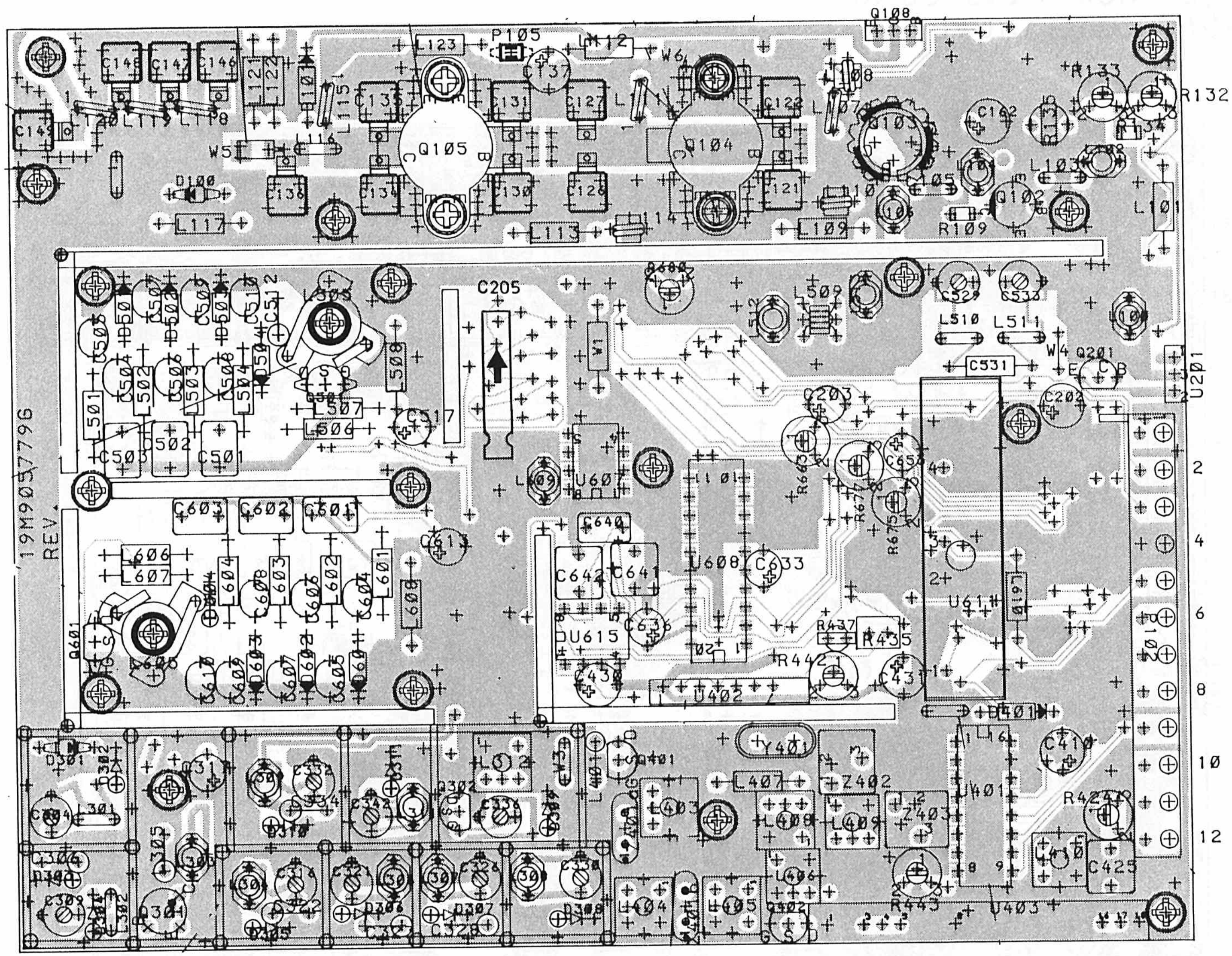

SIMPLEX

RADIO FREQUENCY-UNIT RF6660

COMPONENT LAYOUT-COMPONENT SIDE

D404.199/2

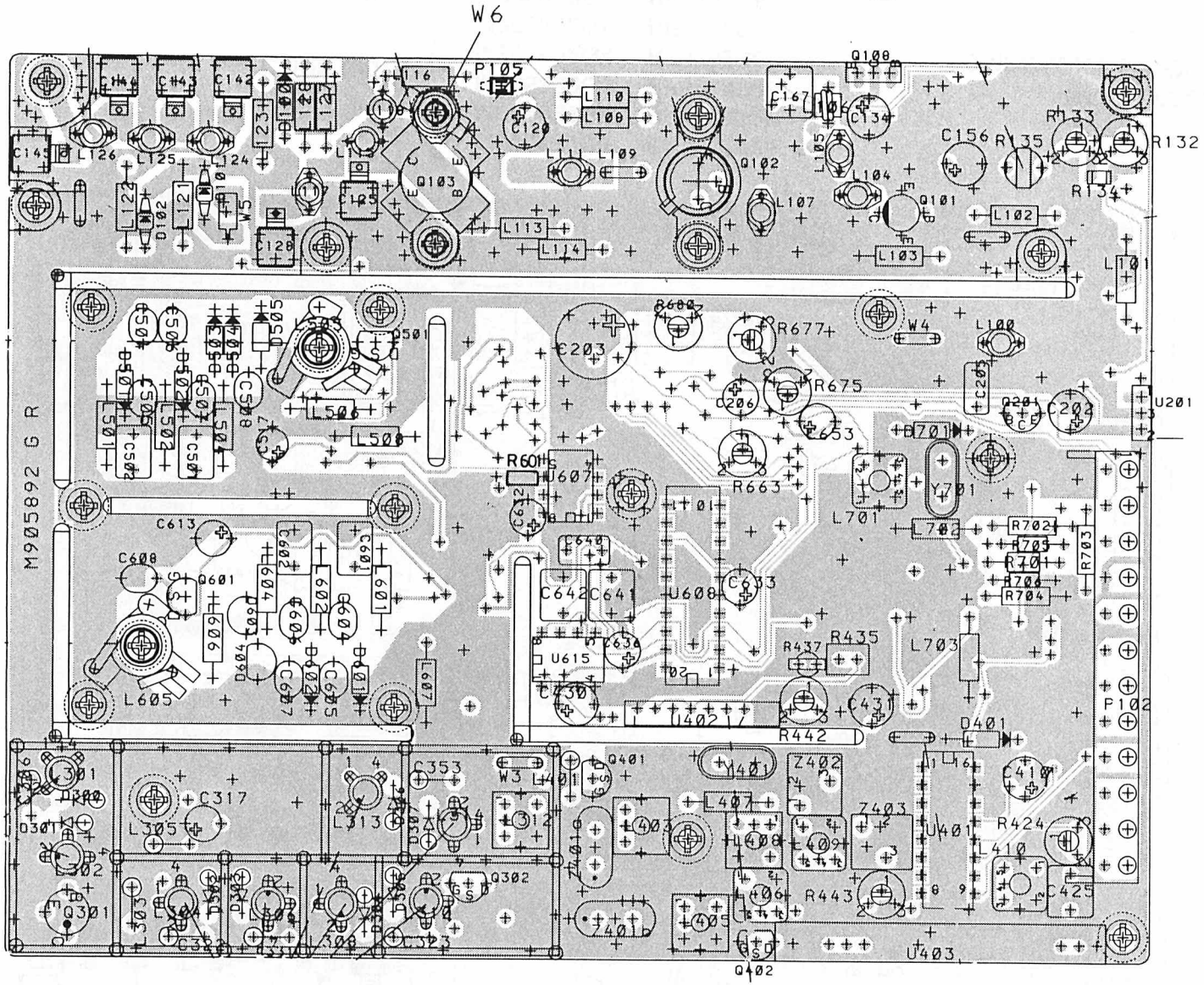
W6
P105
Q100
Q102
Q103
Q101
W5
W4
L100
L101
L102
L103
L104
L105
L107
L109
L110
L111
L113
L114
L116
L120
L121
L122
L123
L124
L125
L126
C120
C128
C134
C142
C143
C145
C156
C167
C203
C206
C633
C634
C635
C636
C637
C638
C639
C640
C641
C642
C653
R132
R133
R134
R135
R601
R663
R675
R677
R680
U201
U607
U608
U615
Y701
L701
L702
R702
R703
R704
R705
R706
R707
M905892 G R
C613
C608
Q601
L605
L607
C601
C602
C603
C604
C605
C606
C607
C609
R604
R605
R606
R607
R608
R609
Q501
L505
L506
L508
C501
C502
C503
C504
C505
C506
C507
C508
C509
C510
C511
C512
C513
C514
C515
C516
C517
C518
C519
C520
C521
C522
C523
C524
C525
C526
C527
C528
C529
C530
C531
C532
C533
C534
C535
C536
C537
C538
C539
C540

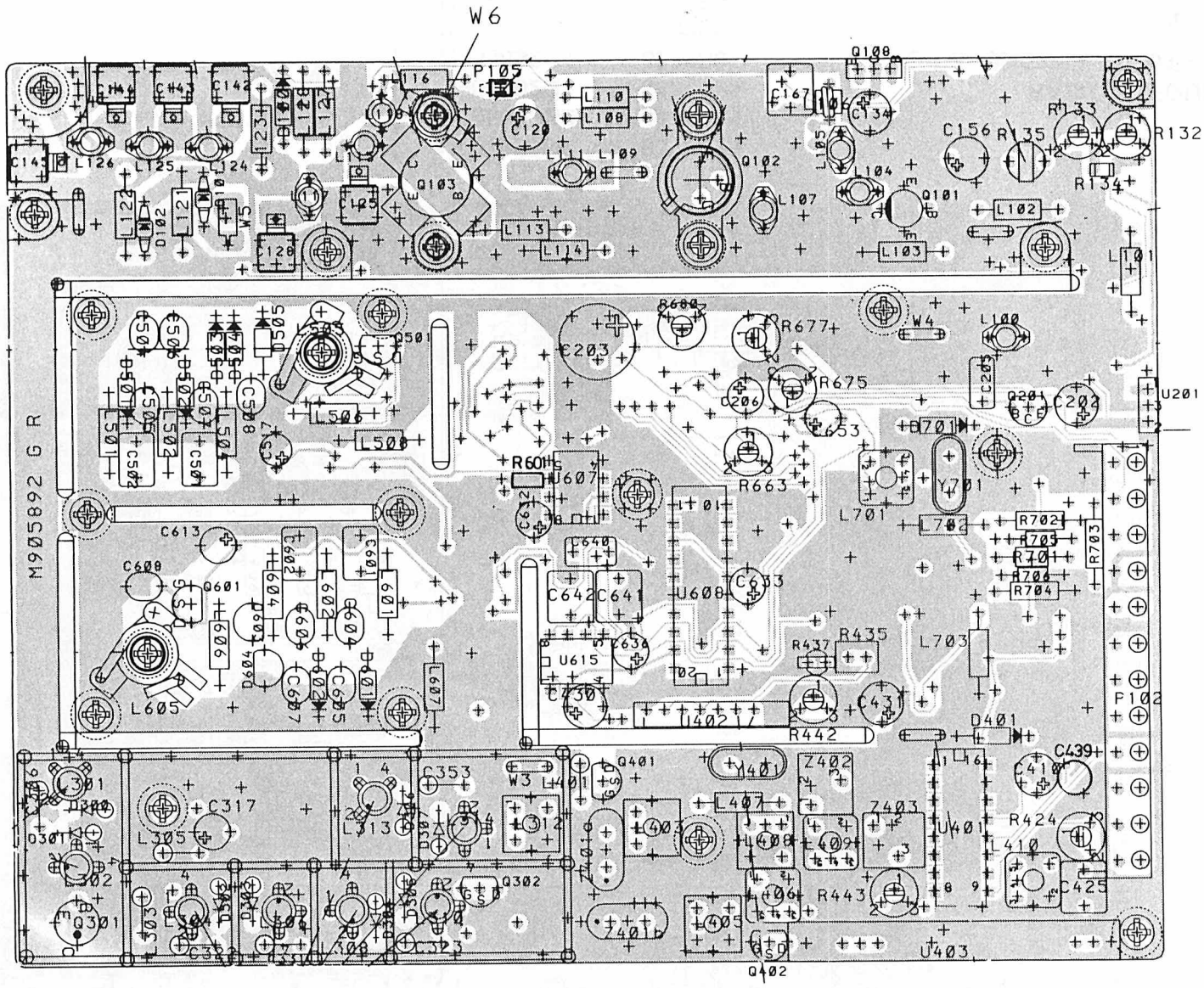

CODE NO.

M905892G1	RF6332S25
M905892G2	RF6333S25
M905892G3	RF6334S25
M905892G4	RF6332S6
M905892G5	RF6333S6
M905892G6	RF6334S6

RADIO FREQUENCY UNIT RF633X
COMPONENT LAYOUT - COMPONENT SIDE

REV. 2 D404.445/2

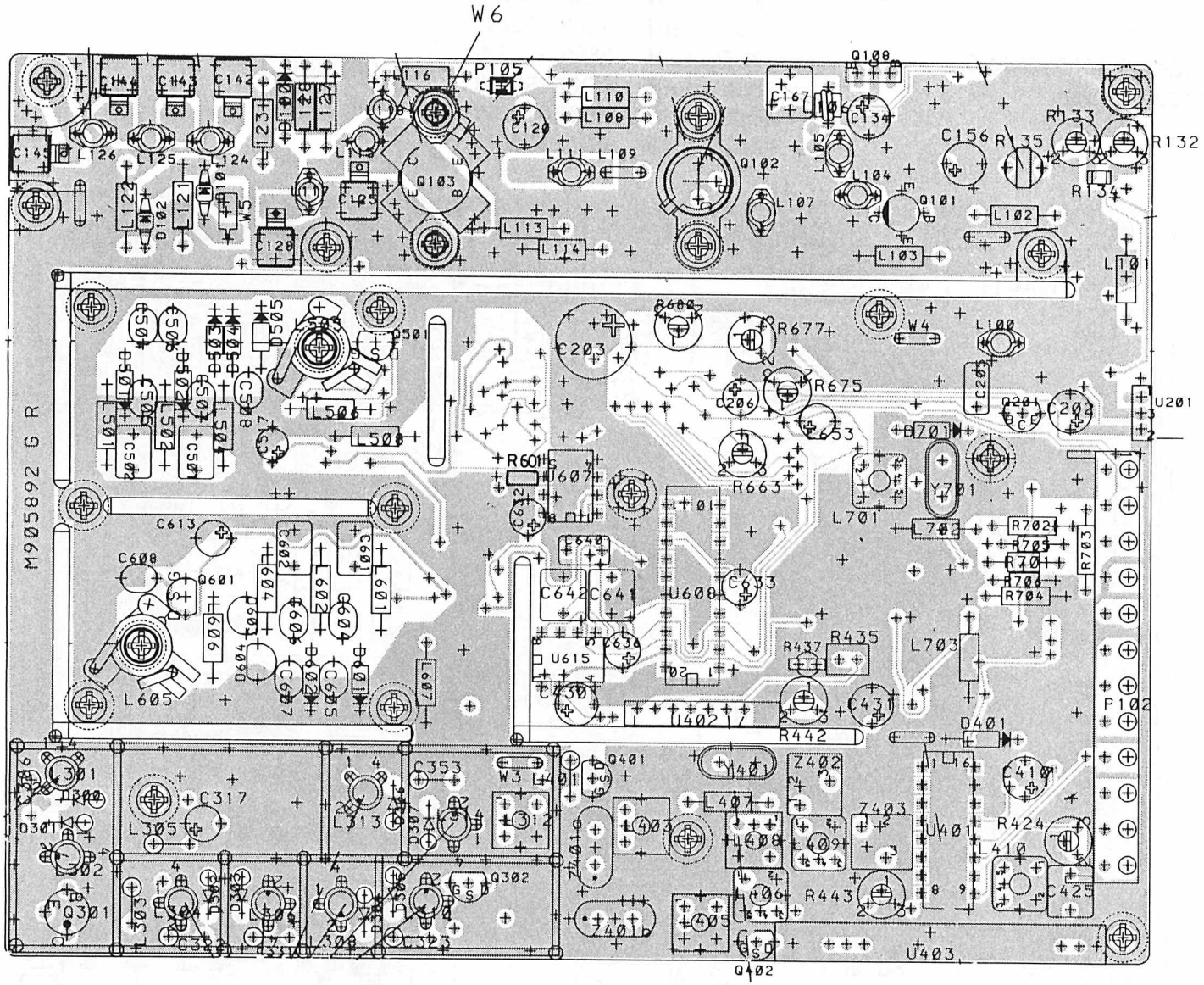
W6
P105
Q100
Q102
Q103
Q101
W5
W4
L100
L101
L102
L103
L104
L105
L107
L109
L110
L111
L113
L114
L116
L120
L121
L122
L123
L124
L125
L126
C120
C128
C134
C142
C143
C145
C156
C167
C203
C206
C633
C634
C635
C636
C637
C638
C639
C640
C641
C642
C653
R132
R133
R134
R135
R601
R663
R675
R677
R680
U201
U607
U608
U615
Y701
L701
L702
R702
R703
R704
R705
R706
R707
M905892 G R
C613
C608
Q601
L605
L607
C601
C602
C603
C604
C605
C606
C607
C609
R604
R605
R606
R607
R608
R609
Q501
L505
L506
L508
C501
C502
C503
C504
C505
C506
C507
C508
C509
C510
C511
C512
C513
C514
C515
C516
C517
C518
C519
C520
C521
C522
C523
C524
C525
C526
C527
C528
C529
C530
C531
C532
C533
C534
C535
C536
C537
C538
C539
C540

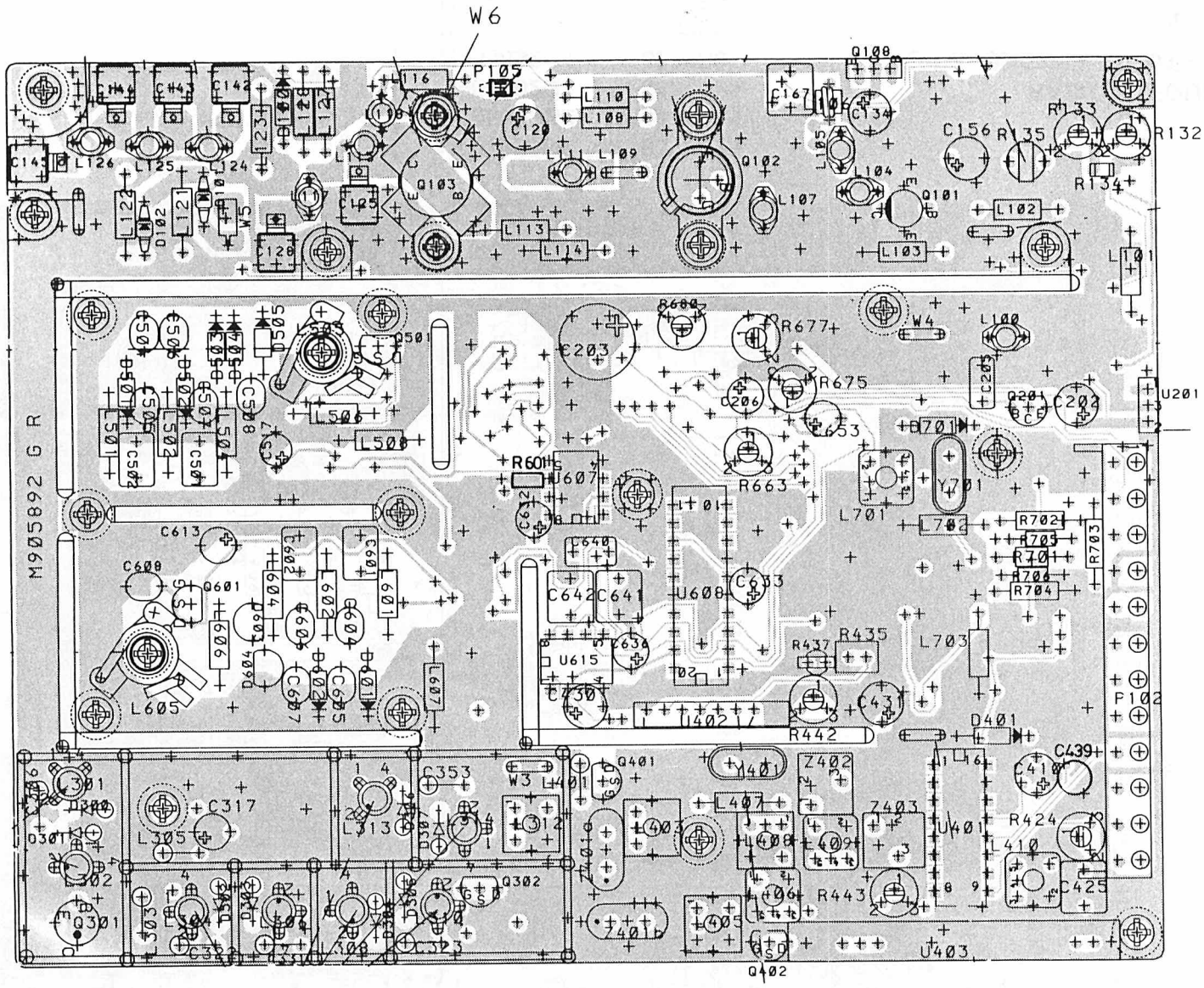

CODE NO.

M905892G1	RF6332S25
M905892G2	RF6333S25
M905892G3	RF6334S25
M905892G4	RF6332S6
M905892G5	RF6333S6
M905892G6	RF6334S6

RADIO FREQUENCY UNIT RF633X
COMPONENT LAYOUT - COMPONENT SIDE

REV. 2 D404.445/2

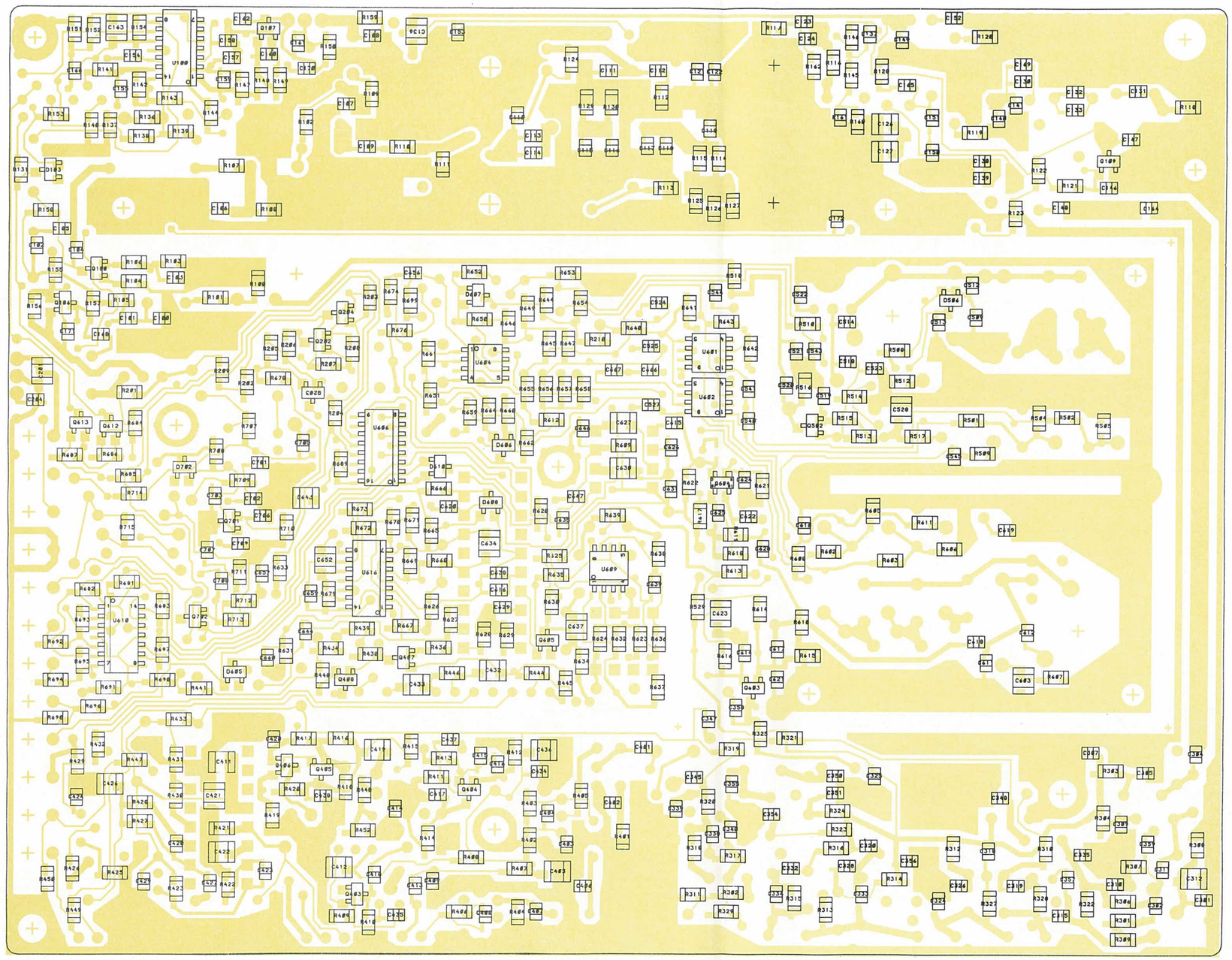

CODE NO.

M905892G1	RF6332S25
M905892G2	RF6333S25
M905892G3	RF6334S25
M905892G4	RF6332S6
M905892G5	RF6333S6
M905892G6	RF6334S6

RADIO FREQUENCY UNIT RF633X
COMPONENT LAYOUT - CHIP SIDE

REV. 2

D404.446/2

Storno

Storno

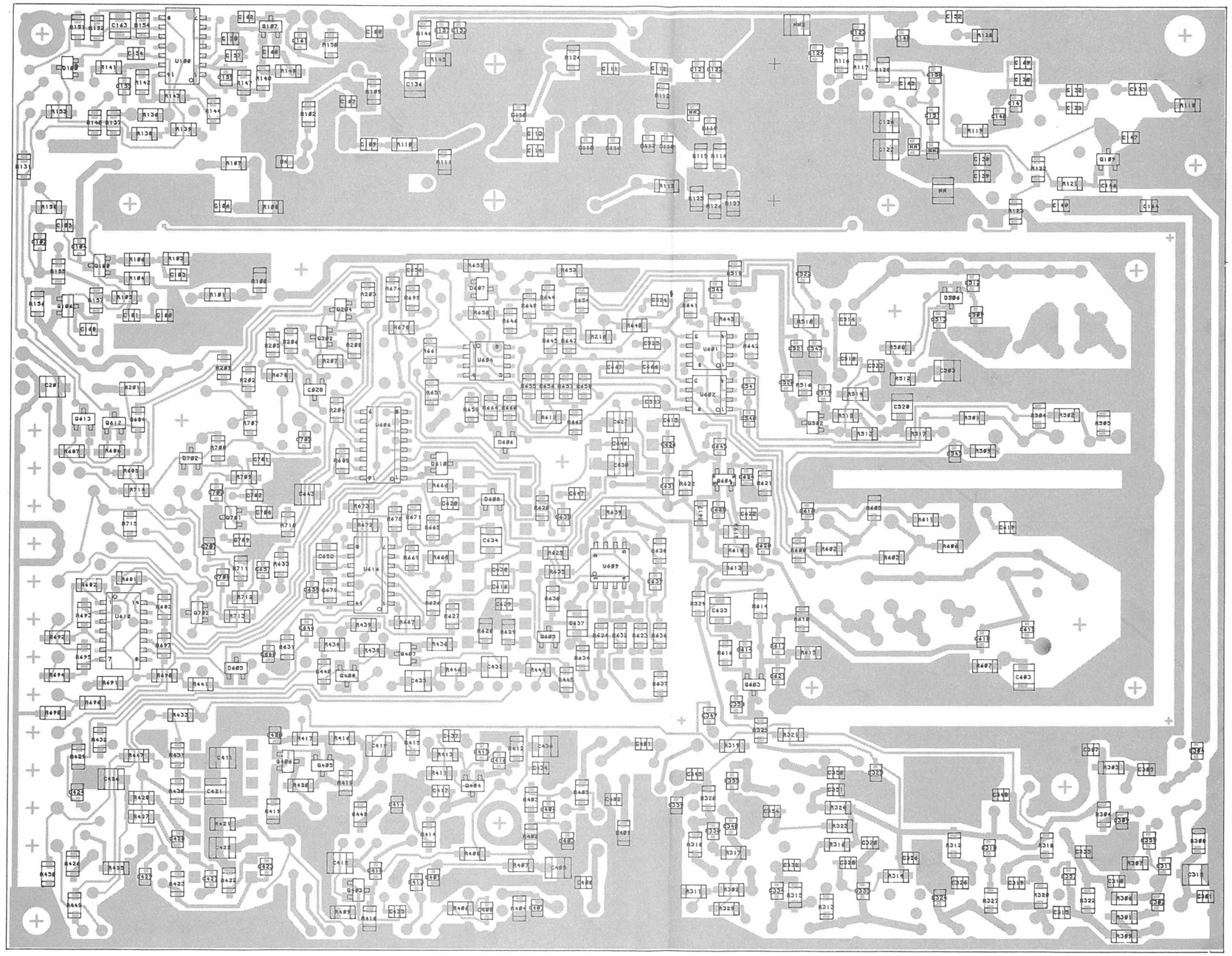

RADIO FREQUENCY UNIT RF6330
COMPONENT LAYOUT CHIP SIDE

D404.249

COMP *	6/10W	25W
C 110	22p	68 p
C 115	68p	150p
C 116	82p	150p
C 117	150p	—
C 118	150p	—
C 119	150p	—
C 125	150p	170p
C 126	100p	270p
C 127	68p	120p
C 128	47p	110p
C 150	8p2	5p 6
C 151	8p2	5p6
C 165	22p	18p
R 110	1R0	10R
R 114	1R8	1
R 115	1R8	1
R 129	56	120
R 130	56	120
R 124	220	100

NOTE:
COMPONENTS MARKED RXXX ARE
PLACED ON COMPONENT SIDE.

>>THIS DOCUMENT REMAINS STORNO'S PROPERTY AND STORNO RESERVES ALL RIGHTS IN RESPECT TO THIS DOCUMENT. WITHOUT STORNO'S WRITTEN PERMISSION THE CONTENTS OF THE DOCUMENT MUST NOT BE IMPARTED TO A THIRD PARTY NOR BE USED FOR ANY UNAUTHORIZED PURPOSE<<

CODE NO. M905892G4 RF6332 S6
M905892G5 RF6333 S6
M905892G6 RF6334 S6

RADIO FREQUENCY UNIT RF633X

REV. A D404.444/2

COMP *	6/10W	25W
C 110	22p	68 p
C 115	68p	150p
C 116	82p	150p
C 117	150p	—
C 118	150p	—
C 119	150p	—
C 125	150p	170p
C 126	100p	270p
C 127	68p	120p
C 128	47p	110p
C 150	8p2	5p6
C 151	8p2	5p6
C 165	22p	18p
R 110	1R0	10R
R 114	1R8	1
R 115	1R8	1
R 129	56	120
R 130	56	120
R 124	220	100

NOTE:
COMPONENTS MARKED RXXX ARE
PLACED ON COMPONENT SIDE.

CODE NO.	MODUL	REV.
M905892G1	RF6332S25	C
M905892G2	RF6333S25	C
M905892G3	RF6334S25	C
M905892G4	RF6332S6	B
M905892G5	RF6333S6	B
M905892G6	RF6334S6	B

RADIO FREQUENCY UNIT RF633X

D404.444/3

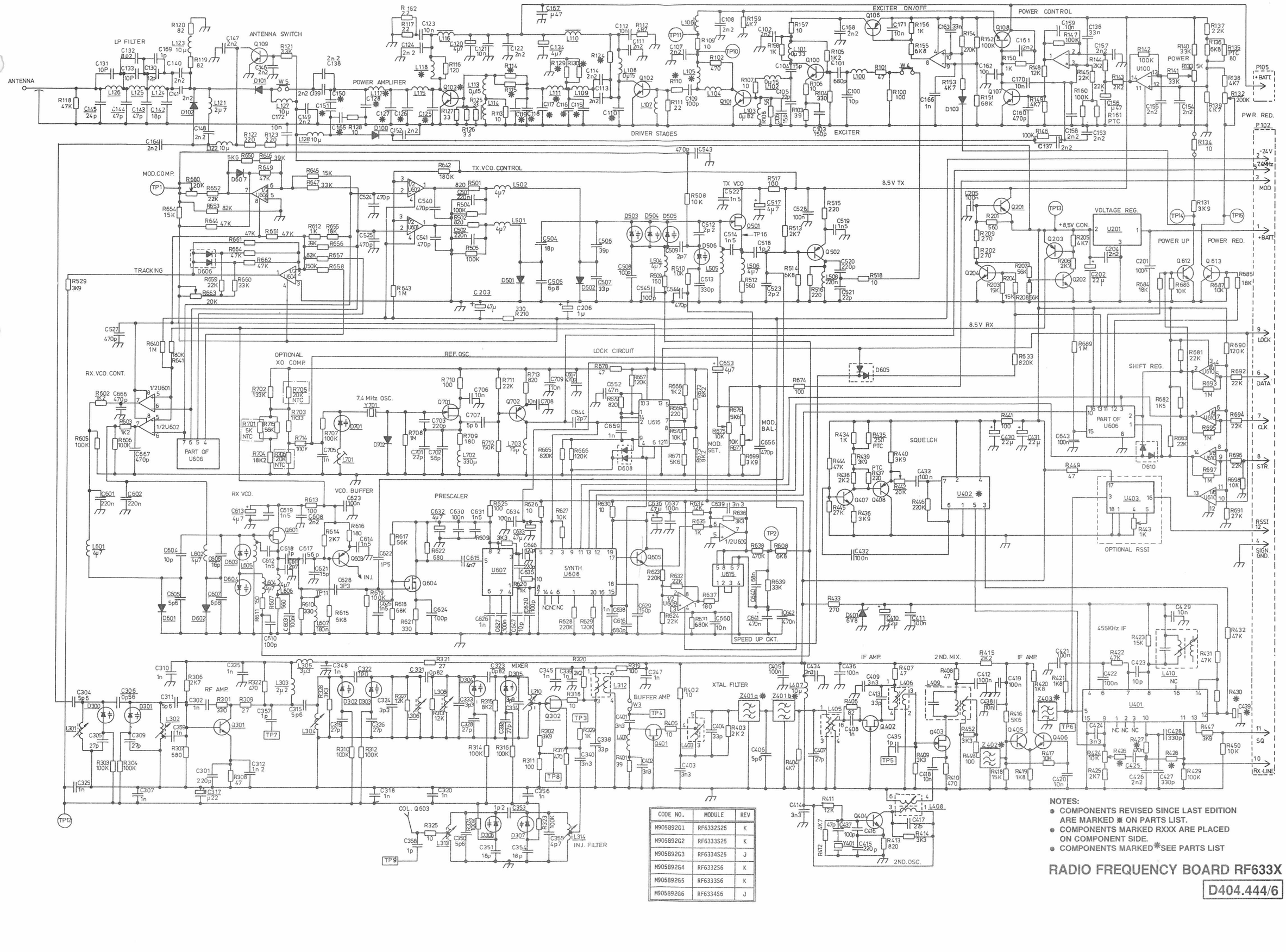

CODE NO.	MODULE	REV
M905892G1	RF6332S25	K
M905892G2	RF6333S25	K
M905892G3	RF6334S25	J
M905892G4	RF6332S6	K
M905892G5	RF6333S6	K
M905892G6	RF6334S6	J

NOTES:

- COMPONENTS REVISED SINCE LAST EDITION ARE MARKED ✱ ON PARTS LIST.
- COMPONENTS MARKED RXXX ARE PLACED ON COMPONENT SIDE.
- COMPONENTS MARKED ✱ SEE PARTS LIST

RADIO FREQUENCY BOARD RF633X

D404.444/6

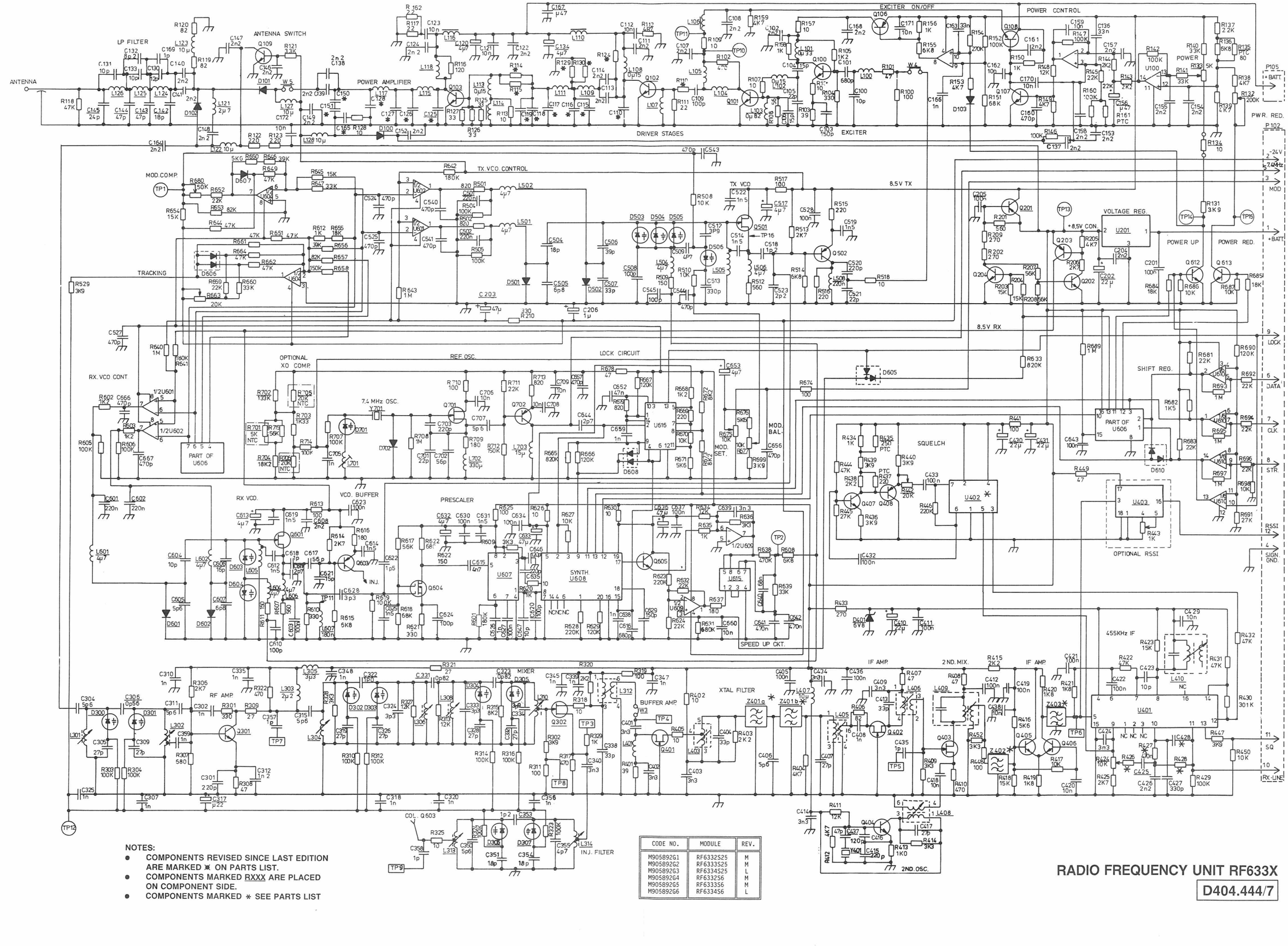

NOTES:

- COMPONENTS REVISED SINCE LAST EDITION ARE MARKED ✱ ON PARTS LIST.
- COMPONENTS MARKED RXXX ARE PLACED ON COMPONENT SIDE.
- COMPONENTS MARKED ∗ SEE PARTS LIST

CODE NO.	MODULE	REV.
M90589ZG1	RF6332S25	M
M90589ZG2	RF6333S25	M
M90589ZG3	RF6334S25	L
M90589ZG4	RF6332S6	M
M90589ZG5	RF6333S6	M
M90589ZG6	RF6334S6	L

RADIO FREQUENCY UNIT RF633X

D404.444/7

CHAPTER 3c

RF666x

RADIO FREQUENCY BOARD RF666x

- Electrical diagram
- Component layout
- Part list

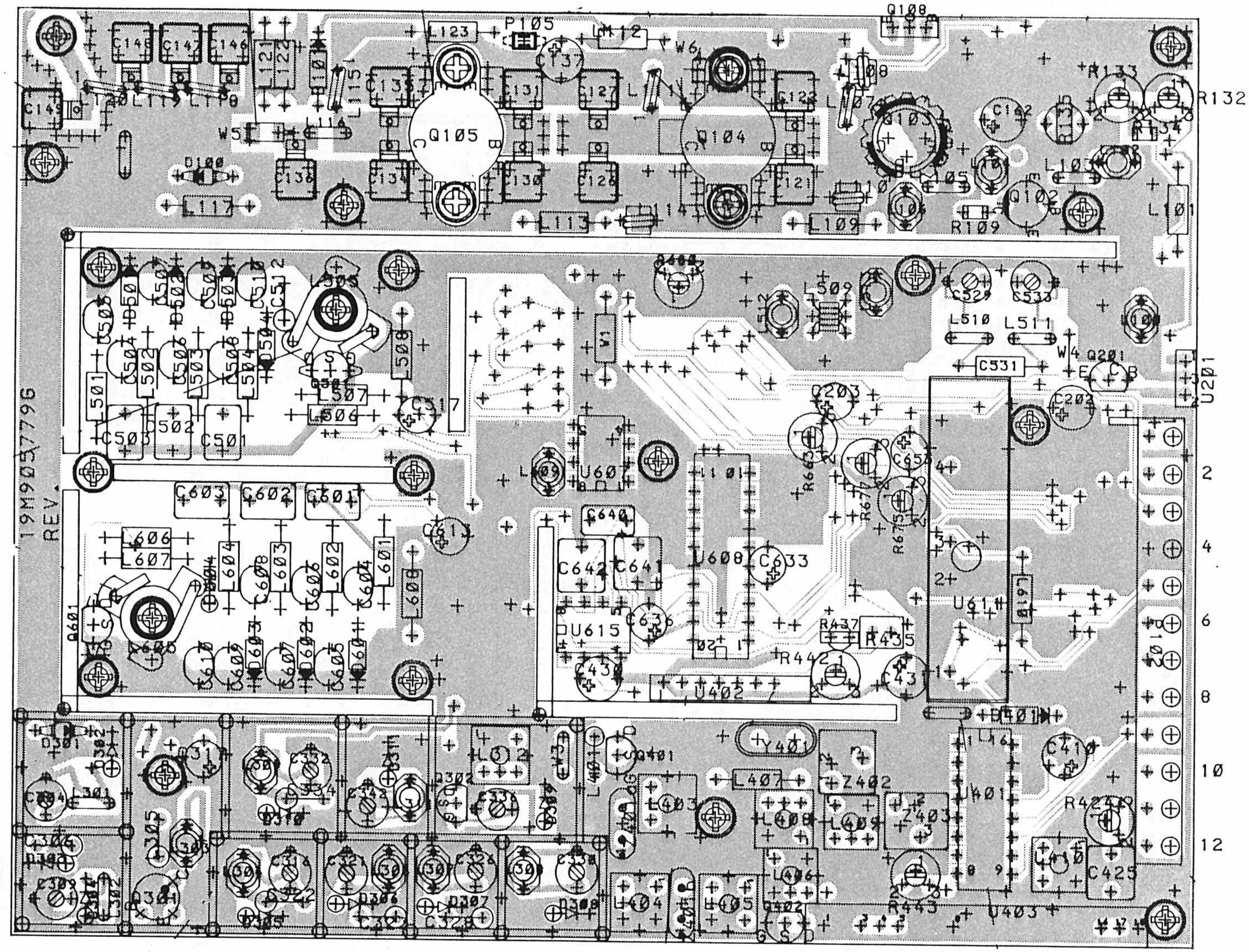

SIMPLEX
RADIO FREQUENCY-UNIT RF6660
COMPONENT LAYOUT- COMPONENT SIDE

D40[illegible]99

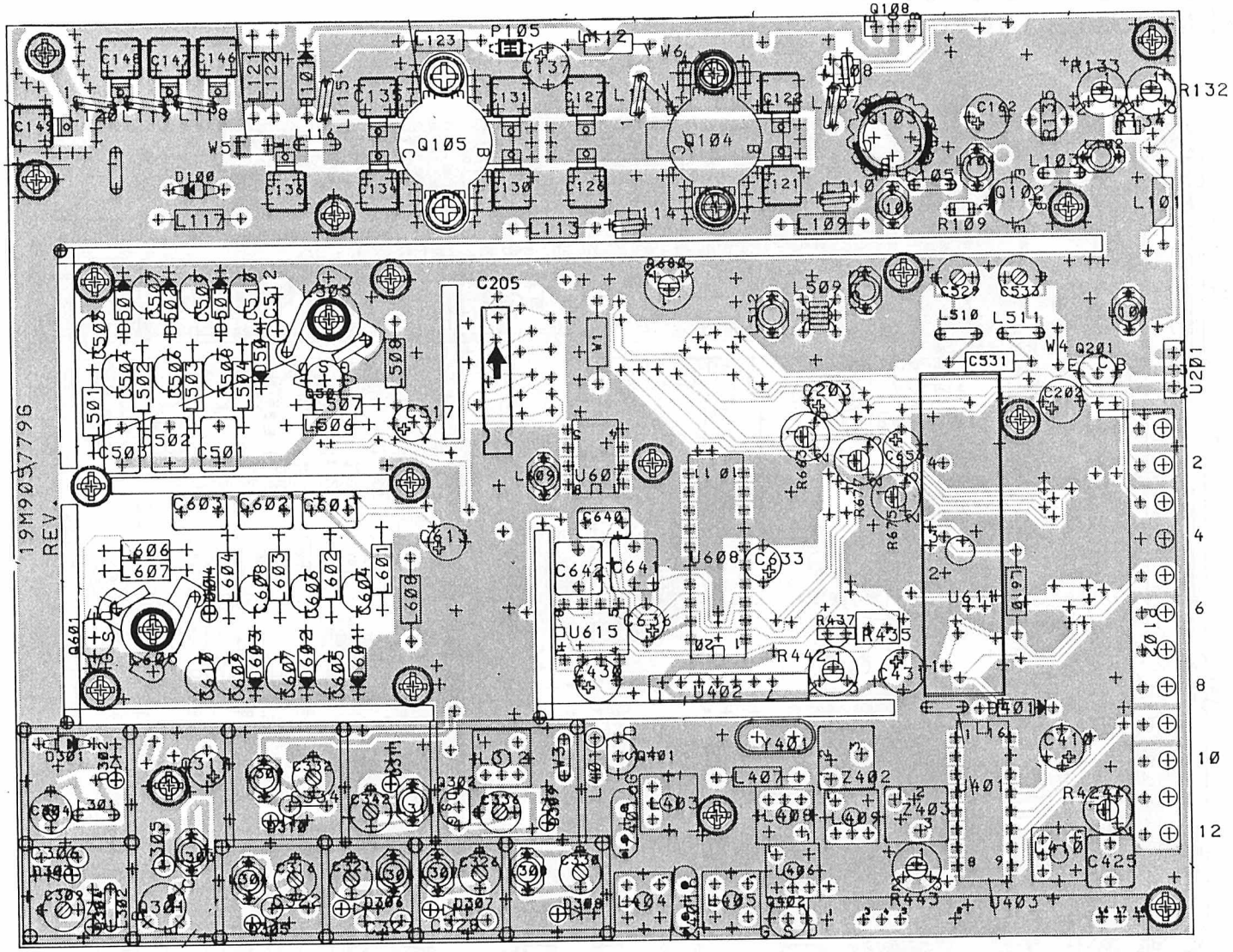

SIMPLEX
RADIO FREQUENCY-UNIT RF6660
COMPONENT LAYOUT- COMPONENT SIDE

D404.199/2

PARTS LIST FOR RADIO FREQUENCY BOARD RF666X : M905779GX BD REV. 3/M

Pos	Code No.	Description	Qt
		COMPONENTS REVISED SINCE LAST EDITION ARE MARKED *	
	M905779G1	RF6662S25 CH. SPAC. 25kHz/25W OUT	
	M905779G2	RF6663S25 CH. SPAC. 20kHz/25W OUT	
	M905779G3	RF6664S25 CH. SPAC. 12.5kHz/25W OUT	
	M905779G4	RF6662S6 CH. SPAC. 25kHz/6W OUT	
	M905779G5	RF6663S6 CH. SPAC. 20kHz/6W OUT	
	M905779G6	RF6664S6 CH. SPAC. 12.5kHz/6W OUT	
C100	2113740A29	CAP CER NPO 10P 5%	1
C101	2113740A33	CAP CER NPO 15P 5%	1
C102	2113741M45	CAP CER CL2 10N 10%	1
C103	2113740A17	CAP CER NPO 3P9 .25P	1
C104	2113740A17	CAP CER NPO 3P9 .25P	1
C105	2113740A39	CAP CER NPO 27P 5%	1
C107	2113740A55	CAP CER NPO 100P 5%	1
C108	2113740A33	CAP CER NPO 15P 5%	1
C109	2113740A39	CAP CER NPO 27P 5%	1
C110	2113740A43	CAP CER NPO 39P 5%	1
C111	2113741M45	CAP CER CL2 10N 10%	1
C112	2113740A55	CAP CER NPO 100P 5%	1
C113	2113740A39	CAP CER NPO 27P 5%	1
C114	J707809P13	CAP CER NPO 10P 5%	1
C115	J707809P18	CAP CER NPO 27P 5%	1
C116	J707809P20	CAP CER NPO 39P 5%	1
C117	J707809P25	CAP CER NPO 100P 5%	1
C118	2113741A33	CAP CER CL2 3N3 5%	1
C119	J707809P25	CAP CER NPO 100P 5% G1,G2,G3	1
C120	J707809P21	CAP CER NPO 47P 5%	1
C121	A700006P19	CAP MICA 27P 5% G1,G2,G3	1
C122	A700006P19	CAP MICA 27P 5% G1,G2,G3	1
C123	J707809P25	CAP CER NPO 100P 5% G1,G2,G3	1
C124	2113741M45	CAP CER CL2 10N 10% G1,G2,G3	1
C126	A700006P11	CAP MICA 15P 5% G1,G2,G3	1
C127	A700006P11	CAP MICA 15P 5% G1,G2,G3	1
C128	J707809P13	CAP CER NPO 10P 5% G4,G5,G6	1
C128	J707809P14	CAP CER NPO 12P 5% G1,G2,G3	1
C129	J707809P13	CAP CER NPO 10P 5% G4,G5,G6	1
C129	J707809P14	CAP CER NPO 12P 5% G1,G2,G3	1
C130	A700006P19	CAP MICA 27P 5%	1
C131	A700006P19	CAP MICA 27P 5%	1
C132	J707809P27	CAP CER NPO 150P 5%	1
C133	2113741M45	CAP CER CL2 10N 10%	1
C134	A700006P26	CAP MICA 47P 5% G1,G2,G3	1
C134	A700006P28	CAP MICA 56P 5% G4,G5,G6	1
C135	A700006P26	CAP MICA 47P 5% G1,G2,G3	1
C135	A700006P28	CAP MICA 56P 5% G3,G4,G5	1
C136	A700006P14	CAP MICA 18P 5%	1
C137	J707353P6	CAP ELECT 4U7 25V	1
C138	2113741C09	CAP CER CL2 47N 5%	1
C139	J707809P25	CAP CER NPO 100P 5%	1
C140	J707809P25	CAP CER NPO 100P 5%	1
C141	J707809P25	CAP CER NPO 100P 5%	1
C142	J707809P25	CAP CER NPO 100P 5%	1
C143	J707809P25	CAP CER NPO 100P 5%	1
C144	J707809P25	CAP CER NPO 100P 5%	1
C145	J707809P25	CAP CER NPO 100P 5%	1
C146	A700006P4	CAP PTFE 8P2 10%	1
C147	A700006P11	CAP MICA 15P 5%	1
C148	A700006P11	CAP MICA 15P 5%	1
C149	A700006P3	CAP PTFE 6P8 10%	1
C150	J707809P8	CAP CER NPO 3P9 .25P	1
C151	2113741A33	CAP CER CL2 3N3 5%	1
C153	J707809P1	CAP CER NPO 1P0 .25P	1
C154	J707809P1	CAP CER NPO 1P0 .25P	1
C155	J707809P25	CAP CER NPO 100P 5%	1
C160	2113740A55	CAP CER NPO 100P 5%	1
C161	2113740A55	CAP CER NPO 100P 5%	1
C162	J707353P3	CAP ELECT 0U47 50V	1
C163	2113740A55	CAP CER NPO 100P 5%	1
C164	2113741M45	CAP CER CL2 10N 10%	1
C165	2113741M45	CAP CER CL2 10N 10%	1
C166	2113740A55	CAP CER NPO 100P 5%	1
C167	2113741M45	CAP CER CL2 10N 10%	1
C168	2113741M45	CAP CER CL2 10N 10%	1
C169	2113741C05	CAP CER CL2 33N 5%	1
C170	2113740A55	CAP CER NPO 100P 5%	1
C171	2113740A55	CAP CER NPO 100P 5%	1
C172	2113741M45	CAP CER CL2 10N 10%	1
C173	2113741M21	CAP CER CL2 1N0 10%	1
C174	2113741A33	CAP CER CL2 3N3 5%	1
C175	J707809P25	CAP CER NPO 100P 5%	1
C201	2113741C17	CAP CER CL2 100N 5%	1
C202	J707444P8	CAP TA SOL 22U 16V	1
C203	J707444P6	CAP TA SOL 4U7 35V	1
C204	2113741M13	CAP CER CL2 470P 10%	1
C205	J706024P7	CAP ELECT 330U 25V	1
C301	J707809P25	CAP CER NPO 100P 5%	1
C302	J707809P15	CAP CER NPO 15P 5%	1
C303	J707809P15	CAP CER NPO 15P 5%	1
C304	J708287P1	CAP VAR CER 3.3/7.2PF	1
C305	2113740A21	CAP CER NPO 5P6 .25P	1
C306	J707483P6	CAP PHEN 0P82 5%	1
C307	2113740A55	CAP CER NPO 100P 5%	1
C308	2113740A24	CAP CER NPO 6P8 .25P	1
C309	J708287P1	CAP VAR CER 3.3/7.2PF	1

Pos	Code No.	Description	Qt
C310	2113741M13	CAP CER CL2 470P 10%	1
C311	2113740A41	CAP CER NPO 33P 5%	1
C312	2113740A63	CAP CER NPO 220P 5%	1
C313	2113741M13	CAP CER CL2 470P 10%	1
C314	2113740A11	CAP CER NPO 2P2 .25P	1
C315	2113740A27	CAP CER NPO 8P2 .25P	1
C316	J708287P1	CAP VAR CER 3.3/7.2PF	1
C317	J707444P2	CAP TA SOL 0U22 35V	1
C318	2113741M13	CAP CER CL2 470P 10%	1
C319	2113740A24	CAP CER NPO 6P8 .25P	1
C320	2113741M13	CAP CER CL2 470P 10%	1
C321	J708287P1	CAP VAR CER 3.3/7.2PF	1
C322	J707483P4	CAP PHEN 0P56 5%	1
C323	J707483P4	CAP PHEN 0P56 5%	1
C324	2113740A24	CAP CER NPO 6P8 .25P	1
C325	2113741M13	CAP CER CL2 470P 10%	1
C326	J708287P1	CAP VAR CER 3.3/7.2PF	1
C327	2113740A24	CAP CER NPO 6P8 .25P	1
C328	J707483P1	CAP PHEN 0P47 5%	1
C329	2113740A21	CAP CER NPO 5P6 .25P	1
C330	J708287P1	CAP VAR CER 3.3/7.2PF	1
C331	2113740A13	CAP CER NPO 2P7 .25P	1
C332	J708287P1	CAP VAR CER 3.3/7.2PF	1
C333	2113740A27	CAP CER NPO 8P2 .25P	1
C334	J707483P2	CAP PHEN 0P33 5%	1
C335	2113741M13	CAP CER CL2 470P 10%	1
C336	J708287P1	CAP VAR CER 3.3/7.2PF	1
C337	2113740A27	CAP CER NPO 8P2 .25P	1
C338	2113740A24	CAP CER NPO 6P8 .25P	1
C339	2113741M45	CAP CER CL2 10N 10%	1
C340	2113741M45	CAP CER CL2 10N 10%	1
C341	2113741M13	CAP CER CL2 470P 10%	1
C342	J708287P1	CAP VAR CER 3.3/7.2PF	1
C343	2113740A29	CAP CER NPO 10P 5%	1
C344	2113741M13	CAP CER CL2 470P 10%	1
C345	2113740A41	CAP CER NPO 33P 5%	1
C347	2113741M13	CAP CER CL2 470P 10%	1
C348	2113741M13	CAP CER CL2 470P 10%	1
C349	2113740A09	CAP CER NPO 1P8 .25P	1
C350	2113741M13	CAP CER CL2 470P 10%	1
C401	2113741A33	CAP CER CL2 3N3 5%	1
C402	2113741A33	CAP CER CL2 3N3 5%	1
C403	2113741A33	CAP CER CL2 3N3 5%	1
C404	2113740A19	CAP CER NPO 4P7 .25P	1
C405	2113741C17	CAP CER CL2 100N 5%	1
C406	2113740A21	CAP CER NPO 5P6 .25P	1
C407	2113740A19	CAP CER NPO 4P7 .25P	1
C408	2113741M21	CAP CER CL2 1N0 10%	1
C409	2113741A33	CAP CER CL2 3N3 5%	1
C410	J707444P8	CAP TA SOL 22U 16V	1
C411	2113741C17	CAP CER CL2 100N 5%	1
C412	2113741C17	CAP CER CL2 100N 5%	1
C413	2113740A33	CAP CER NPO 15P 5%	1
C414	2113741A33	CAP CER CL2 3N3 5%	1
C415	2113741A33	CAP CER CL2 3N3 5%	1
C416	J708702P16	CAP CER N750 18P 5%	1
C417	2113740A49	CAP CER NPO 56P 5%	1
C418	2113741M45	CAP CER CL2 10N 10%	1
C419	2113741C17	CAP CER CL2 100N 5%	1

Pos	Code No.	Description	Qt
C420	2113741M45	CAP CER CL2 10N 10%	1
C421	2113741C17	CAP CER CL2 100N 5%	1
C422	2113741C17	CAP CER CL2 100N 5%	1
C423	2113740A29	CAP CER NPO 10P 5%	1
C424	2113741A33	CAP CER CL2 3N3 5%	1
C425	J707444P5	CAP TA SOL 2U2 35V * G1,G2,G4,G5	1
C425	J707412P13	CAP PYES 470N 10% * G3,G6	1
C426	2113740B59	CAP CER NPO 270P 5% * G1,G2,G4,G5	1
C426	2113740C25	CAP CER NPO 2N2 5% * G3,G6	1
C427	2113740A67	CAP CER NPO 330P 5% * G3,G6	1
C428	2113740A63	CAP CER NPO 220P 5% G3,G6	1
C428	2113740A57	CAP CER NPO 120P 5% * G1,G2,G4,G5	1
C429	2113741M45	CAP CER CL2 10N 10%	1
C430	J707444P8	CAP TA SOL 22U 16V	1
C431	J707444P8	CAP TA SOL 22U 16V	1
C432	2113741C17	CAP CER CL2 100N 5%	1
C433	2113741C17	CAP CER CL2 100N 5%	1
C434	2113741A33	CAP CER CL2 3N3 5%	1
C435	2113740A03	CAP CER NPO 1P0 .25P	1
C436	2113741C17	CAP CER CL2 100N 5%	1
C501	J707412P11	CAP PYES 220N 10%	1
C502	J707412P11	CAP PYES 220N 10%	1
C503	J707412P11	CAP PYES 220N 10%	1
C504	A700235P3	CAP CER N150 1P5 .25P	1
C505	A700235P3	CAP CER N150 1P5 .25P	1
C506	A700235P6	CAP CER N150 2P7 .25P	1
C507	A700235P5	CAP CER N150 2P2 .25P	1
C508	A700235P10	CAP CER N150 5P6 .25P	1
C509	A700235P12	CAP CER N150 8P2 .25P	1
C510	A700235P9	CAP CER N150 4P7 .25P	1
C512	J707483P7	CAP PHEN 1P00 5%	1
C513	2113741M13	CAP CER CL2 470P 10%	1
C515	2113740A19	CAP CER NPO 4P7 .25P	1
C516	2113740A15	CAP CER NPO 3P3 .25P	1
C517	J707444P6	CAP TA SOL 4U7 35V	1
C518	2113740A13	CAP CER NPO 2P7 .25P	1
C519	2113741M13	CAP CER CL2 470P 10%	1
C520	2113740A17	CAP CER NPO 3P9 .25P	1
C521	2113740A19	CAP CER NPO 4P7 .25P	1
C522	2113741M13	CAP CER CL2 470P 10%	1
C523	2113740A21	CAP CER NPO 5P6 .25P	1
C525	2113741M13	CAP CER CL2 470P 10%	1
C526	2113740A31	CAP CER NPO 12P 5%	1
C527	2113741M13	CAP CER CL2 470P 10%	1
C528	2113740A59	CAP CER NPO 150P 5%	1
C529	J708287P1	CAP VAR CER 3.3/7.2PF	1
C530	2113740A21	CAP CER NPO 5P6 .25P	1
C531	J707483P7	CAP PHEN 1P00 5%	1
C532	2113740A21	CAP CER NPO 5P6 .25P	1
C533	J708287P1	CAP VAR CER 3.3/7.2PF	1
C534	2113740A15	CAP CER NPO 3P3 .25P	1
C535	2113740A15	CAP CER NPO 3P3 .25P	1

PARTS LIST FOR RADIO FREQUENCY BOARD RF666X : M905779GX BD REV. 3/M

Pos	Code No.	Description	Qt
C536	2113741M13	CAP CER CL2 470P 10%	1
C537	2113741M13	CAP CER CL2 470P 10%	1
C538	2113741M13	CAP CER CL2 470P 10%	1
C539	2113741M13	CAP CER CL2 470P 10%	1
C540	2113741M13	CAP CER CL2 470P 10%	1
C541	2113741M13	CAP CER CL2 470P 10%	1
C542	2113741M13	CAP CER CL2 470P 10%	1
C543	2113741M13	CAP CER CL2 470P 10%	1
C544	2113741M13	CAP CER CL2 470P 10%	1
C545	2113741M13	CAP CER CL2 470P 10%	1
C601	J707412P11	CAP PYES 220N 10%	1
C602	J707412P11	CAP PYES 220N 10%	1
C603	J707412P11	CAP PYES 220N 10%	1
C604	A700235P5	CAP CER N150 2P2 .25P	1
C605	A700235P3	CAP CER N150 1P5 .25P	1
C606	A700235P8	CAP CER N150 3P9 .25P	1
C607	A700235P9	CAP CER N150 4P7 .25P	1
C608	A700235P12	CAP CER N150 8P2 .25P	1
C609	A700235P33	CAP CER N150 13P 5%	1
C610	A700235P12	CAP CER N150 8P2 .25P	1
C611	2113740A15	CAP CER NP0 3P3 .25P	1
C612	2113740A19	CAP CER NP0 4P7 .25P	1
C613	J707444P6	CAP TA SOL 4U7 35V	1
C614	2113740A13	CAP CER NP0 2P7 .25P	1
C615	2113740A71	CAP CER NP0 470P 5%	1
C616	2113741M13	CAP CER CL2 470P 10%	1
C617	2113740A15	CAP CER NP0 3P3 .25P	1
C618	2113740A19	CAP CER NP0 4P7 .25P	1
C619	2113741M13	CAP CER CL2 470P 10%	1
C620	2113740A03	CAP CER NP0 1P0 .25P	1
C621	2113741M13	CAP CER CL2 470P 10%	1
C622	2113741M13	CAP CER CL2 470P 10%	1
C623	2113741M13	CAP CER CL2 470P 10%	1
C624	2113740A59	CAP CER NP0 150P 5%	1
C625	2113740A37	CAP CER NP0 22P 5%	1
C626	2113741M21	CAP CER CL2 1N0 10%	1
C627	2113741M45	CAP CER CL2 10N 10%	1
C628	2113740C21	CAP CER NP0 1N5 5%	1
C629	2113740A59	CAP CER NP0 150P 5%	1
C630	2113741C17	CAP CER CL2 100N 5%	1
C632	2113741C17	CAP CER CL2 100N 5%	1
C633	J707444P17	CAP TA SOL 47U 10V	1
C634	2113741C17	CAP CER CL2 100N 5%	1
C635	2113741M13	CAP CER CL2 470P 10%	1
C636	J707444P17	CAP TA SOL 47U 10V	1
C637	2113741C17	CAP CER CL2 100N 5%	1
C639	2113741A33	CAP CER CL2 3N3 5%	1
C640	J707412P9	CAP PYES 100N 10%	1
C641	J707412P13	CAP PYES 470N 10%	1
C642	J707412P13	CAP PYES 470N 10%	1
C643	2113741C09	CAP CER CL2 47N 5%	1
C644	2113740A13	CAP CER NP0 2P7 .25P	1
C645	2113740A63	CAP CER NP0 220P 5%	1
C647	2113740A29	CAP CER NP0 10P 5%	1
C648	2113740A63	CAP CER NP0 220P 5%	1
C653	J707444P6	CAP TA SOL 4U7 35V	1
C656	2113740A71	CAP CER NP0 470P 5%	1
C657	2113741M13	CAP CER CL2 470P 10%	1
C658	2113741M45	CAP CER CL2 10N 10%	1

Pos	Code No.	Description	Qt
C659	2113741M21	CAP CER CL2 1N0 10%	1
C660	2113741M13	CAP CER CL2 470P 10%	1
C661	2113741M13	CAP CER CL2 470P 10%	1
C662	2113741M13	CAP CER CL2 470P 10%	1
C663	2113741M13	CAP CER CL2 470P 10%	1
C664	2113741C17	CAP CER CL2 100N 5%	1
C665	2113741M13	CAP CER CL2 470P 10%	1
C666	2113741M13	CAP CER CL2 470P 10%	1
C667	2113741M13	CAP CER CL2 470P 10%	1
C668	2113741A41	CAP CER CL2 6N8 5%	1
C669	2113740A55	CAP CER NP0 100P 5%	1
C670	2113740A31	CAP CER NP0 12P 5%	1
C671	2113741C17	CAP CER CL2 100N 5%	1
C680	J708538P5	RES VAR CERM 10K 20% G5	1
D100	J706892P2	DIO SI PIN UM 9678	1
D101	A700047P3	DIO SI SIG 1N6263	1
D102	J707390P1	DIO SI SIG BAV 74	1
D301	J706892P2	DIO SI PIN UM 9678	1
D302	J706007P1	DIO SI CAP BB 505B	1
D303	J706007P1	DIO SI CAP BB 505B	1
D304	A700047P3	DIO SI SIG 1N6263	1
D305	J706007P1	DIO SI CAP BB 505B	1
D306	J706007P1	DIO SI CAP BB 505B	1
D307	J706007P1	DIO SI CAP BB 505B	1
D308	J706007P1	DIO SI CAP BB 505B	1
D309	J706007P1	DIO SI CAP BB 505B	1
D310	J706007P1	DIO SI CAP BB 505B	1
D311	J706007P1	DIO SI CAP BB 505B	1
D401	A700025P8	DIO SI ZENR 6V8 5% 0.4W	1
D501	J706007P1	DIO SI CAP BB 505B	1
D502	J706007P1	DIO SI CAP BB 505B	1
D503	J706007P1	DIO SI CAP BB 505B	1
D504	J706007P1	DIO SI CAP BB 505B	1
D505	J707769P2	DIO SI CAP BBY 31	1
D506	J707390P1	DIO SI SIG BAV 74	1
D507	J707769P1	DIO SI CAP BBY 31	1
D508	J707769P1	DIO SI CAP BBY 31	1
D601	J706007P1	DIO SI CAP BB 505B	1
D602	J706007P1	DIO SI CAP BB 505B	1
D603	J706007P1	DIO SI CAP BB 505B	1
D604	J706007P1	DIO SI CAP BB 505B	1
D605	J707390P1	DIO SI SIG BAV 74	1
D606	J708681P1	DIO SI SIG BAW 56	1
D607	J707390P1	DIO SI SIG BAV 74	1
D608	J707390P1	DIO SI SIG BAV 74	1
D610	J708681P1	DIO SI SIG BAW 56	1
D611	J707389P1	DIO SI SIG BAV 99	1
L100	K805653G2	COIL ASM 2 1/2T	1
L101	A700024P1	COIL RF FIX 0.1UH 10%	1
L102	K805653G2	COIL ASM 2 1/2T	1
L103	J707256P2	COIL FIX	1
L104	K805653G2	COIL ASM 2 1/2T	1
L105	J707256P2	COIL FIX	1
L106	K805653G1	COIL ASM 1 1/2T	1
L107	A701237P1	COIL	1
L108	J707339G1	COIL FIX ASM	1
L109	A700024P1	COIL RF FIX 0.1UH 10% G1,G2,G3	1

PARTS LIST FOR RADIO FREQUENCY BOARD RF666X : M905779GX BD REV. 3/M

Pos	Code No.	Description	Qt
L110	J707339G1	COIL FIX ASM G1,G2,G3	1
L111	A701237P1	COIL G1,G2,G3	1
L112	J709287P1	CORE TOR FERR G1,G2,G3	1
L113	A700024P1	COIL RF FIX 0.1UH 10%	1
L114	J707339G1	COIL FIX ASM	1
L115	A701237P1	COIL G1,G2,G3	1
L115	J707256P3	COIL FIX G4,G5,G6	1
L116	J708561P4	COIL FIXED	1
L117	A700024P3	COIL RF FIX 0.15UH 10%	1
L118	J709603P1	COIL	1
L119	J709603P1	COIL	1
L120	J709603P1	COIL	1
L121	A700024P25	COIL RF FIX 10UH 10%	1
L122	A700024P25	COIL RF FIX 10UH 10%	1
L123	J709287P1	CORE TOR FERR	1
L301	J707256P2	COIL FIX	1
L302	J707256P2	COIL FIX	1
L303	K805627G1	COIL RF FIXED 1 1/2T	1
L304	K805627G1	COIL RF FIXED 1 1/2T	1
L305	J707486P11	COIL RF FIX 2.2UH 10%	1
L306	K805627G1	COIL RF FIXED 1 1/2T	1
L307	K805627G1	COIL RF FIXED 1 1/2T	1
L308	K805627G1	COIL RF FIXED 1 1/2T	1
L309	K805627G1	COIL RF FIXED 1 1/2T	1
L311	K805627G1	COIL RF FIXED 1 1/2T	1
L312	J708428P2	COIL RF VAR 45 MHZ	1
L401	J707486P10	COIL RF FIX 1.5UH 10%	1
L403	K805570G2	COIL ASM	1
L404	K805570G1	COIL ASM	1
L405	J708428P1	COIL RF VAR 45 MHZ	1
L406	K805570G3	COIL ASM	1
L407	A700024P25	COIL RF FIX 10UH 10%	1
L408	J708428P2	COIL RF VAR 45 MHZ	1
L409	J707431P1	COIL RF VAR 455KHZ 25%	1
L410	J707431P1	COIL RF VAR 455KHZ 25%	1
L501	A700024P13	COIL RF FIX 1.0UH 10%	1
L502	A700024P13	COIL RF FIX 1.0UH 10%	1
L503	A700024P13	COIL RF FIX 1.0UH 10%	1
L504	A700024P13	COIL RF FIX 1.0UH 10%	1
L505	L855671P1	COIL RADIO FREQUENCY	1
L506	A700024P13	COIL RF FIX 1.0UH 10%	1
L507	A700024P13	COIL RF FIX 1.0UH 10%	1
L508	A700024P1	COIL RF FIX 0.1UH 10%	1
L509	K805527G1	COIL ASM	1
L510	J707256P3	COIL FIX	1
L511	J707256P3	COIL FIX	1
L512	K805653G1	COIL ASM 1 1/2T	1
L513	K805653G3	COIL ASM 3 1/2T	1
L601	A700024P13	COIL RF FIX 1.0UH 10%	1
L602	A700024P13	COIL RF FIX 1.0UH 10%	1
L603	A700024P13	COIL RF FIX 1.0UH 10%	1
L604	A700024P13	COIL RF FIX 1.0UH 10%	1
L605	L855671P1	COIL RADIO FREQUENCY	1
L606	A700024P13	COIL RF FIX 1.0UH 10%	1
L607	A700024P13	COIL RF FIX 1.0UH 10%	1
L608	A700024P1	COIL RF FIX 0.1UH 10%	1

Pos	Code No.	Description	Qt
L609	K805653G6	COIL ASM 6 1/2T	1
L610	A700024P29	COIL RF FIX 22UH 10%	1
P102	J707064P112	CONN PWB FEM 12-CKT	1
P105	A701883P4	CONN PWB FEM RECP	1
Q100	J707388P1	TSTR NPN SI BFR 53	1
Q101	J707388P1	TSTR NPN SI BFR 53	1
Q102	A701940P1	TSTR NPN SI RF-PWR 0.4W	1
Q103	A700066P2	TSTR NPN SI RF-PWR 2.0W	1
Q104	J708167P2	TSTR NPN SI RF-PWR 23W G1,G2,G3	1
Q105	J708556P1	TSTR NPN SI RF-PWR 28W G1,G2,G3	1
Q105	J708167P2	TSTR NPN SI RF-PWR 23W G4,G5,G6	1
Q106	J707432P1	TSTR PNP SI BCX 18	1
Q107	J707386P1	TSTR NPN SI BCW 32	1
Q108	J708406P1	TSTR NPN SI BD 233	1
Q201	J707435P1	TSTR PNP SI BC 369	1
Q202	J707386P1	TSTR NPN SI BCW 32	1
Q203	J707432P1	TSTR PNP SI BCX 18	1
Q204	J707386P1	TSTR NPN SI BCW 32	1
Q301	J706011P2	TSTR NPN SI BFR 91A	1
Q302	J708315P1	TSTR JFET SI 2N5245	1
Q401	J707817P1	TSTR JFET SI J 309	1
Q402	J707817P1	TSTR JFET SI J 309	1
Q403	J707419P1	TSTR JFET SI BF511	1
Q404	J708418P1	TSTR NPN SI BFS 20	1
Q405	J708418P1	TSTR NPN SI BFS 20	1
Q406	J708418P1	TSTR NPN SI BFS 20	1
Q407	J707386P1	TSTR NPN SI BCW 32	1
Q408	J707387P1	TSTR PNP SI BCW 30	1
Q501	J707817P1	TSTR JFET SI J 309	1
Q502	J707388P1	TSTR NPN SI BFR 53	1
Q503	J707388P1	TSTR NPN SI BFR 53	1
Q504	J708318P1	TSTR PNP SI BFT 92	1
Q601	J707817P1	TSTR JFET SI J 309	1
Q602	J707388P1	TSTR NPN SI BFR 53	1
Q603	J707388P1	TSTR NPN SI BFR 53	1
Q604	J708318P1	TSTR PNP SI BFT 92	1
Q605	J707386P1	TSTR NPN SI BCW 32	1
Q606	J707386P1	TSTR NPN SI BCW 32	1
Q607	J707386P1	TSTR NPN SI BCW 32	1
Q608	J707433P1	TSTR MFET SI BF 989	1
Q609	J707419P1	TSTR JFET SI BF511	1
R100	J707385P152	RES MFLM 1/8W 1K5 5%	1
R101	J707385P562	RES MFLM 1/8W 5K6 5%	1
R102	J707385P470	RES MFLM 1/8W 47R 5%	1
R103	J707385P152	RES MFLM 1/8W 1K5 5%	1
R104	J707385P562	RES MFLM 1/8W 5K6 5%	1
R105	J707385P270	RES MFLM 1/8W 27R 5%	1
R106	J707385P270	RES MFLM 1/8W 27R 5%	1
R107	J707385P102	RES MFLM 1/8W 1K0 5%	1
R108	J707385P100	RES MFLM 1/8W 10R 5%	1
R109	J707385P100	RES MFLM 1/8W 10R 5%	1
R110	J707385P947	RES MFLM 1/8W 4R7 20%	1
R111	J707385P102	RES MFLM 1/8W 1K0 5%	1
R112	J707385P270	RES MFLM 1/8W 27R 5%	1
R113	J707385P100	RES MFLM 1/8W 10R 5% G1,G2,G3	1

Pos	Code No.	Description	Qt
R114	J707385P100	RES MFLM 1/8W 10R 5% G1,G2,G3	1
R115	J707385P100	RES MFLM 1/8W 10R 5%	1
R116	J707385P100	RES MFLM 1/8W 10R 5%	1
R117	J707385P100	RES MFLM 1/8W 10R 5%	1
R119	J707385P473	RES MFLM 1/8W 47K 5%	1
R120	J707385P473	RES MFLM 1/8W 47K 5%	1
R121	J707385P102	RES MFLM 1/8W 1K0 5% G4,G5,G6	1
R121	J707385P221	RES MFLM 1/8W 220R 5% G1,G2,G3	1
R122	J707385P102	RES MFLM 1/8W 1K0 5% G4,G5,G6	1
R122	J707385P221	RES MFLM 1/8W 220R 5% G1,G2,G3	1
R123	J707385P220	RES MFLM 1/8W 22R 5%	1
R124	J707385P220	RES MFLM 1/8W 22R 5%	1
R125	J707385P391	RES MFLM 1/8W 390R 5% G1,G2,G3	1
R126	J707385P391	RES MFLM 1/8W 390R 5% G1,G2,G3	1
R127	J707385P101	RES MFLM 1/8W 100R 5% G1,G2,G3	1
R130	J707385P103	RES MFLM 1/8W 10K 5%	1
R131	J707385P472	RES MFLM 1/8W 4K7 5% G1,G2,G3	1
R131	J707385P473	RES MFLM 1/8W 47K 5% G4,G5,G6	1
R132	J708538P9	RES VAR CERM 200K 20%	1
R133	J708538P4	RES VAR CERM 5K0 20%	1
R134	J707385P100	RES MFLM 1/8W 10R 5%	1
R135	J706147P2	RES THERM PTC 80R 25% G1,G2,G3	1
R136	J707385P101	RES MFLM 1/8W 100R 5% G4,G5,G6	1
R136	J707385P153	RES MFLM 1/8W 15K 5% G1,G2,G3	1
R137	J707385P473	RES MFLM 1/8W 47K 5%	1
R138	J707385P333	RES MFLM 1/8W 33K 5%	1
R139	J707385P333	RES MFLM 1/8W 33K 5%	1
R140	J707385P104	RES MFLM 1/8W 100K 5%	1
R141	J707385P222	RES MFLM 1/8W 2K2 5%	1
R142	J707385P222	RES MFLM 1/8W 2K2 5%	1
R143	J707385P104	RES MFLM 1/8W 100K 5%	1
R144	J707385P682	RES MFLM 1/8W 6K8 5%	1
R145	J707385P154	RES MFLM 1/8W 150K 5%	1
R146	J707385P472	RES MFLM 1/8W 4K7 5%	1
R147	J707385P123	RES MFLM 1/8W 12K 5%	1
R148	J707385P331	RES MFLM 1/8W 330R 5%	1
R149	J707385P683	RES MFLM 1/8W 68K 5%	1
R150	J707385P104	RES MFLM 1/8W 100K 5%	1
R151	J707385P274	RES MFLM 1/8W 270K 5%	1
R152	J707385P562	RES MFLM 1/8W 5K6 5%	1
R153	J707385P222	RES MFLM 1/8W 2K2 5%	1
R154	J707385P102	RES MFLM 1/8W 1K0 5%	1
R155	J707385P472	RES MFLM 1/8W 4K7 5%	1
R156	J707385P223	RES MFLM 1/8W 22K 5%	1
R157	J709725P1	RES THERM PTC 1K0	1
R158	J707385P472	RES MFLM 1/8W 4K7 5%	1

Pos	Code No.	Description	Qt
R167	2113740A55	CAP CER NPO 100P 5% G2	1
R201	J707385P561	RES MFLM 1/8W 560R 5%	1
R202	J707385P271	RES MFLM 1/8W 270R 5%	1
R203	J707385P153	RES MFLM 1/8W 15K 5%	1
R204	J707385P153	RES MFLM 1/8W 15K 5%	1
R205	J707385P472	RES MFLM 1/8W 4K7 5%	1
R206	J707385P272	RES MFLM 1/8W 2K7 5%	1
R207	J707385P563	RES MFLM 1/8W 56K 5%	1
R208	J707385P563	RES MFLM 1/8W 56K 5%	1
R209	J707385P271	RES MFLM 1/8W 270R 5%	1
R301	J707385P473	RES MFLM 1/8W 47K 5%	1
R302	J707385P221	RES MFLM 1/8W 220R 5%	1
R303	J707385P104	RES MFLM 1/8W 100K 5%	1
R304	J707385P104	RES MFLM 1/8W 100K 5%	1
R306	J707385P222	RES MFLM 1/8W 2K2 5%	1
R307	J707385P681	RES MFLM 1/8W 680R 5%	1
R308	J707385P560	RES MFLM 1/8W 56R 5%	1
R309	J707385P270	RES MFLM 1/8W 27R 5%	1
R310	J707385P104	RES MFLM 1/8W 100K 5%	1
R311	J707385P270	RES MFLM 1/8W 27R 5%	1
R312	J707385P104	RES MFLM 1/8W 100K 5%	1
R313	J707385P104	RES MFLM 1/8W 100K 5%	1
R314	J707385P104	RES MFLM 1/8W 100K 5%	1
R315	J707385P104	RES MFLM 1/8W 100K 5%	1
R316	J707385P104	RES MFLM 1/8W 100K 5%	1
R317	J707385P272	RES MFLM 1/8W 2K7 5%	1
R318	J707385P100	RES MFLM 1/8W 10R 5%	1
R319	J707385P101	RES MFLM 1/8W 100R 5%	1
R320	J707385P103	RES MFLM 1/8W 10K 5%	1
R321	J707385P270	RES MFLM 1/8W 27R 5%	1
R322	J707385P104	RES MFLM 1/8W 100K 5%	1
R323	J707385P102	RES MFLM 1/8W 1K0 5%	1
R324	J707385P101	RES MFLM 1/8W 100R 5%	1
R401	J707385P560	RES MFLM 1/8W 56R 5%	1
R402	J707385P100	RES MFLM 1/8W 10R 5%	1
R403	J707385P332	RES MFLM 1/8W 3K3 5%	1
R405	J707385P100	RES MFLM 1/8W 10R 5%	1
R406	J707385P820	RES MFLM 1/8W 82R 5%	1
R407	J707385P470	RES MFLM 1/8W 47R 5%	1
R408	J707385P470	RES MFLM 1/8W 47R 5%	1
R410	J707385P272	RES MFLM 1/8W 2K7 5%	1
R411	J707385P682	RES MFLM 1/8W 6K8 5%	1
R412	J707385P272	RES MFLM 1/8W 2K7 5%	1
R413	J707385P471	RES MFLM 1/8W 470R 5%	1
R414	J707385P220	RES MFLM 1/8W 22R 5%	1
R415	J707385P222	RES MFLM 1/8W 2K2 5%	1
R416	J707385P562	RES MFLM 1/8W 5K6 5%	1
R417	J707385P103	RES MFLM 1/8W 10K 5%	1
R418	J707385P153	RES MFLM 1/8W 15K 5%	1
R419	J707385P182	RES MFLM 1/8W 1K8 5%	1
R420	J707385P182	RES MFLM 1/8W 1K8 5%	1
R421	J707385P182	RES MFLM 1/8W 1K8 5%	1
R422	J707385P473	RES MFLM 1/8W 47K 5%	1
R423	J707385P153	RES MFLM 1/8W 15K 5%	1
R424	J708538P5	RES VAR CERM 10K 20%	1
R425	J707385P153	RES MFLM 1/8W 15K 5% ✱ G1,G2,G4,G5	1
R425	J707385P272	RES MFLM 1/8W 2K7 5% ✱ G3,G6	1

Pos	Code No.	Description	Qt
R426	J707385P563	RES MFLM 1/8W 56K 5% * G1,G2,G4,G5	1
R426	J707385P473	RES MFLM 1/8W 47K 5% * G3,G6	1
R427	J707385P393	RES MFLM 1/8W 39K 5% * G1,G2,G4,G5	1
R427	J707385P473	RES MFLM 1/8W 47K 5% * G3,G6	1
R428	J707385P273	RES MFLM 1/8W 27K 5% * G1,G2,G4,G5	1
R428	J707385P563	RES MFLM 1/8W 56K 5% * G3,G6	1
R429	J707385P104	RES MFLM 1/8W 100K 5%	1
R430	J707385P334	RES MFLM 1/8W 330K 5%	1
R431	J707385P473	RES MFLM 1/8W 47K 5%	1
R432	J707385P473	RES MFLM 1/8W 47K 5%	1
R433	J707385P271	RES MFLM 1/8W 270R 5%	1
R434	J707385P102	RES MFLM 1/8W 1K0 5%	1
R435	J706147P3	RES THERM PTC 250R 25%	1
R436	J707385P392	RES MFLM 1/8W 3K9 5%	1
R437	J707406P7	RES THERM NTC 220R 10%	1
R438	J707385P222	RES MFLM 1/8W 2K2 5%	1
R439	J707385P392	RES MFLM 1/8W 3K9 5%	1
R440	J707385P392	RES MFLM 1/8W 3K9 5%	1
R441	J707385P101	RES MFLM 1/8W 100R 5%	1
R442	J708538P6	RES VAR CERM 20K 20%	1
R444	J707385P473	RES MFLM 1/8W 47K 5%	1
R445	J707385P273	RES MFLM 1/8W 27K 5%	1
R446	J707385P224	RES MFLM 1/8W 220K 5%	1
R447	J707385P392	RES MFLM 1/8W 3K9 5%	1
R448	J707385P101	RES MFLM 1/8W 100R 5%	1
R449	J707385P470	RES MFLM 1/8W 47R 5%	1
R450	J707385P103	RES MFLM 1/8W 10K 5%	1
R451	J707385P332	RES MFLM 1/8W 3K3 5%	1
R452	J707385P332	RES MFLM 1/8W 3K3 5%	1
R501	J707385P122	RES MFLM 1/8W 1K2 5%	1
R502	J707385P122	RES MFLM 1/8W 1K2 5%	1
R503	J707385P122	RES MFLM 1/8W 1K2 5%	1
R504	J707385P104	RES MFLM 1/8W 100K 5%	1
R505	J707385P104	RES MFLM 1/8W 100K 5%	1
R506	J707385P104	RES MFLM 1/8W 100K 5%	1
R508	J707385P103	RES MFLM 1/8W 10K 5%	1
R509	J707385P100	RES MFLM 1/8W 10R 5%	1
R510	J707385P332	RES MFLM 1/8W 3K3 5%	1
R512	J707385P271	RES MFLM 1/8W 270R 5%	1
R513	J707385P183	RES MFLM 1/8W 18K 5%	1
R514	J707385P472	RES MFLM 1/8W 4K7 5%	1
R515	J707385P271	RES MFLM 1/8W 270R 5%	1
R517	J707385P101	RES MFLM 1/8W 100R 5%	1
R520	J707385P682	RES MFLM 1/8W 6K8 5%	1
R521	J707385P152	RES MFLM 1/8W 1K5 5%	1
R522	J707385P680	RES MFLM 1/8W 68R 5%	1
R523	J707385P222	RES MFLM 1/8W 2K2 5%	1
R524	J707385P472	RES MFLM 1/8W 4K7 5%	1
R525	J707385P680	RES MFLM 1/8W 68R 5%	1
R526	J707385P104	RES MFLM 1/8W 100K 5%	1
R527	J707385P104	RES MFLM 1/8W 100K 5%	1
R528	J707385P103	RES MFLM 1/8W 10K 5%	1
R529	J707385P150	RES MFLM 1/8W 15R 5%	1
R530	J707385P182	RES MFLM 1/8W 1K8 5%	1
R531	J707385P682	RES MFLM 1/8W 6K8 5%	1
R532	J707385P392	RES MFLM 1/8W 3K9 5%	1
R601	J707385P122	RES MFLM 1/8W 1K2 5%	1
R602	J707385P122	RES MFLM 1/8W 1K2 5%	1
R603	J707385P122	RES MFLM 1/8W 1K2 5%	1
R604	J707385P104	RES MFLM 1/8W 100K 5%	1
R605	J707385P104	RES MFLM 1/8W 100K 5%	1
R606	J707385P104	RES MFLM 1/8W 100K 5%	1
R607	J707385P561	RES MFLM 1/8W 560R 5%	1
R608	J707385P221	RES MFLM 1/8W 220R 5%	1
R609	J707385P472	RES MFLM 1/8W 4K7 5%	1
R610	J707385P183	RES MFLM 1/8W 18K 5%	1
R611	J707385P271	RES MFLM 1/8W 270R 5%	1
R612	J707385P223	RES MFLM 1/8W 22K 5%	1
R613	J707385P101	RES MFLM 1/8W 100R 5%	1
R614	J707385P682	RES MFLM 1/8W 6K8 5%	1
R615	J707385P222	RES MFLM 1/8W 2K2 5%	1
R616	J707385P101	RES MFLM 1/8W 100R 5%	1
R617	J707385P101	RES MFLM 1/8W 100R 5%	1
R618	J707385P102	RES MFLM 1/8W 1K0 5%	1
R619	J707385P102	RES MFLM 1/8W 1K0 5%	1
R620	J707385P272	RES MFLM 1/8W 2K7 5%	1
R621	J707385P330	RES MFLM 1/8W 33R 5%	1
R622	J707385P102	RES MFLM 1/8W 1K0 5%	1
R623	J707385P123	RES MFLM 1/8W 12K 5%	1
R624	J707385P223	RES MFLM 1/8W 22K 5%	1
R625	J707385P470	RES MFLM 1/8W 47R 5%	1
R626	J707385P100	RES MFLM 1/8W 10R 5%	1
R627	J707385P103	RES MFLM 1/8W 10K 5%	1
R628	J707385P224	RES MFLM 1/8W 220K 5%	1
R629	J707385P393	RES MFLM 1/8W 39K 5% G1,G2,G4,G5	1
R629	J707385P823	RES MFLM 1/8W 82K 5% G3,G6	1
R630	J707385P100	RES MFLM 1/8W 10R 5% G1,G4,G5,G6	1
R631	J707385P332	RES MFLM 1/8W 3K3 5% G1,G2,G4,G5	1
R632	J707385P393	RES MFLM 1/8W 39K 5%	1
R633	J707385P223	RES MFLM 1/8W 22K 5%	1
R634	J707385P470	RES MFLM 1/8W 47R 5%	1
R635	J707385P102	RES MFLM 1/8W 1K0 5%	1
R636	J707385P332	RES MFLM 1/8W 3K3 5%	1
R637	J707385P181	RES MFLM 1/8W 180R 5%	1
R638	J707385P154	RES MFLM 1/8W 150K 5% G1,G2,G4,G5	1
R638	J707385P823	RES MFLM 1/8W 82K 5% G3,G6	1
R639	J707385P682	RES MFLM 1/8W 6K8 5% G1,G2,G4,G5	1
R639	J707385P822	RES MFLM 1/8W 8K2 5% G3,G6	1
R640	J707385P105	RES MFLM 1/8W 1M0 10%	1
R641	J707385P184	RES MFLM 1/8W 180K 5%	1
R642	J707385P184	RES MFLM 1/8W 180K 5%	1
R643	J707385P105	RES MFLM 1/8W 1M0 10%	1
R644	J707385P224	RES MFLM 1/8W 220K 5%	1
R645	J707385P103	RES MFLM 1/8W 10K 5%	1

Pos	Code No.	Description	Qt
R646	J707385P472	RES MFLM 1/8W 4K7 5%	1
R647	J707385P333	RES MFLM 1/8W 33K 5%	1
R648	J707385P683	RES MFLM 1/8W 68K 5%	1
R649	J707385P104	RES MFLM 1/8W 100K 5%	1
R650	J707385P223	RES MFLM 1/8W 22K 5%	1
R651	J707385P104	RES MFLM 1/8W 100K 5%	1
R652	J707385P472	RES MFLM 1/8W 4K7 5%	1
R653	J707385P333	RES MFLM 1/8W 33K 5%	1
R654	J707385P562	RES MFLM 1/8W 5K6 5%	1
R655	J707385P183	RES MFLM 1/8W 18K 5%	1
R656	J707385P393	RES MFLM 1/8W 39K 5%	1
R657	J707385P823	RES MFLM 1/8W 82K 5%	1
R658	J707385P154	RES MFLM 1/8W 150K 5%	1
R659	J707385P102	RES MFLM 1/8W 1K0 5%	1
R660	J707385P333	RES MFLM 1/8W 33K 5%	1
R661	J707385P473	RES MFLM 1/8W 47K 5%	1
R662	J707385P393	RES MFLM 1/8W 39K 5%	1
R663	J708538P5	RES VAR CERM 10K 20%	1
R664	J707385P333	RES MFLM 1/8W 33K 5%	1
R665	J707385P824	RES MFLM 1/8W 820K 5%	1
R666	J707385P124	RES MFLM 1/8W 120K 5%	1
R667	J707385P124	RES MFLM 1/8W 120K 5%	1
R668	J707385P122	RES MFLM 1/8W 1K2 5%	1
R669	J707385P221	RES MFLM 1/8W 220R 5%	1
R670	J707385P103	RES MFLM 1/8W 10K 5%	1
R671	J707385P562	RES MFLM 1/8W 5K6 5%	1
R672	J707385P822	RES MFLM 1/8W 8K2 5%	1
R673	J707385P822	RES MFLM 1/8W 8K2 5%	1
R674	J707385P101	RES MFLM 1/8W 100R 5%	1
R675	J708538P5	RES VAR CERM 10K 20%	1
R676	J707385P123	RES MFLM 1/8W 12K 5%	1
R677	J708538P5	RES VAR CERM 10K 20%	1
R678	J707385P821	RES MFLM 1/8W 820R 5%	1
R679	J707385P683	RES MFLM 1/8W 68K 5%	1
R680	J708538P6	RES VAR CERM 20K 20%	1
R681	J707385P683	RES MFLM 1/8W 68K 5%	1
R682	J707385P331	RES MFLM 1/8W 330R 5%	1
R683	J707385P681	RES MFLM 1/8W 680R 5%	1
R684	J707385P105	RES MFLM 1/8W 1M0 10%	1
R685	J707385P183	RES MFLM 1/8W 18K 5%	1
R686	J707385P103	RES MFLM 1/8W 10K 5%	1
R687	J707385P183	RES MFLM 1/8W 18K 5%	1
R688	J707385P103	RES MFLM 1/8W 10K 5%	1
R689	J707385P124	RES MFLM 1/8W 120K 5%	1
R690	J707385P152	RES MFLM 1/8W 1K5 5%	1
R691	J707385P223	RES MFLM 1/8W 22K 5%	1
R692	J707385P105	RES MFLM 1/8W 1M0 10%	1
R693	J707385P223	RES MFLM 1/8W 22K 5%	1
R694	J707385P223	RES MFLM 1/8W 22K 5%	1
R695	J707385P105	RES MFLM 1/8W 1M0 10%	1
R696	J707385P223	RES MFLM 1/8W 22K 5%	1
R697	J707385P223	RES MFLM 1/8W 22K 5%	1
R698	J707385P105	RES MFLM 1/8W 1M0 10%	1
R699	J707385P273	RES MFLM 1/8W 27K 5%	1
R700	J707385P103	RES MFLM 1/8W 10K 5%	1
R701	J707385P824	RES MFLM 1/8W 820K 5%	1
R702	J707385P824	RES MFLM 1/8W 820K 5%	1
R703	J707385P154	RES MFLM 1/8W 150K 5%	1
R704	J707385P561	RES MFLM 1/8W 560R 5%	1

Pos	Code No.	Description	Qt
R705	J707385P122	RES MFLM 1/8W 1K2 5%	1
R706	J707385P561	RES MFLM 1/8W 560R 5%	1
U100	J708165P2	IC LIN OP-AMP 324	1
U201	J708333P1	IC LIN VR FIX 4785	1
U401	J707449P1	IC LIN IF-AMP 3357	1
U402	M905766G1	INT CKT SQ 4002 G1,G4	1
U402	M905766G2	INT CKT SQ 4003 G3,G6	1
U402	M905766G3	INT CKT SQ 4004 G2,G5	1
U601	J707859P1	IC LIN OP-AMP 204	1
U602	J707859P1	IC LIN OP-AMP 204	1
U603	J707859P1	IC LIN OP-AMP 204	1
U604	J707859P1	IC LIN OP-AMP 204	1
U606	J707243P1	IC DIG REG 4094	1
U607	J707374P3	IC PLL PRESC 12017 G1,G2,G4,G4	1
U607	J707374P4	IC PLL PRESC 12018 G3,G6	1
U608	B800902P1	IC PLL SYN CUSTOM DES	1
U609	J707859P1	IC LIN OP-AMP 204	1
U610	J708503P2	IC LIN CMPAR LM 339	1
U615	J708621P2	CPLR OPTO PC 827	1
U616	J708503P2	IC LIN CMPAR LM 339	1
W001	J706451P1	WIRE STRAP G5	1
W004	J706451P1	WIRE STRAP	1
W1	A700184P1	RES WIRE JMPR OR JUMPER	1
W3	J707256P1	COIL FIX	1
W5	J708717P1	STRAP	1
Y401	J708426P1	CRYSTAL UNIT 44.5450MHZ	1
Z401	J708330P1	FLTR CRY 45.0 +/-7.5KHZ G1,G4	1
Z401	J708330P2	FLTR CRY 45.0 +/-6KHZ G2,G5	1
Z401	J708330P3	FLTR CRY 45.0 +/-3.75KHZ G3,G6	1
Z402	J707446P1	FLTR CER 455K +/-10KHZ G1,G4	1
Z402	J707446P3	FLTR CER 455K +/- 7.5KHZ G2,G5	1
Z402	J707446P4	FLTR CER 455K +/- 4.5KHZ G3,G6	1
Z403	J707446P1	FLTR CER 455K +/-10KHZ G1,G4	1
Z403	J707446P3	FLTR CER 455K +/- 7.5KHZ G2,G5	1
Z403	J707446P4	FLTR CER 455K +/- 4.5KHZ G3,G6	1
	M905780P1R3	BD PW SMD DS G1,G2,G3	1
	M905780P2R3	BD PW SMD DS G4,G5,G6	1
		NON REFERENCED ITEMS:	
	J706804P2	WASH INS CRYS FOR HC-18/U	1
	J706804P3	WASH INS CRYS FOR HC-45/U	2
	J708561P3	COIL FIXED	2
	J708966G1	HEAT SINK MODF	1
	K805569G1	SHIELD METALLIZED	1
	J709006P1	SPACER SELF CLINCHING G4,G5,G6	2

PARTS LIST FOR RADIO FREQUENCY BOARD RF666X : M905779GX BD REV. 3/L

Pos	Code No.	Description	Qt
		COMPONENTS REVISED SINCE LAST EDITION ARE MARKED ¤	
	M905779G1	RF6662S25 CH. SPAC. 25kHz/25W OUT	
	M905779G2	RF6663S25 CH. SPAC. 20kHz/25W OUT	
	M905779G3	RF6664S25 CH. SPAC. 12.5kHz/25W OUT	
	M905779G4	RF6662S6 CH. SPAC. 25kHz/6W OUT	
	M905779G5	RF6663S6 CH. SPAC. 20kHz/6W OUT	
	M905779G6	RF6664S6 CH. SPAC. 12.5kHz/6W OUT	
C100	2113740A29	CAP CER NPO 10P 5%	1
C101	2113740A33	CAP CER NPO 15P 5%	1
C102	2113741M45	CAP CER CL2 10N 10%	1
C103	2113740A17	CAP CER NPO 3P9 .25P	1
C104	2113740A17	CAP CER NPO 3P9 .25P	1
C105	2113740A39	CAP CER NPO 27P 5%	1
C107	2113740A55	CAP CER NPO 100P 5%	1
C108	2113740A33	CAP CER NPO 15P 5%	1
C109	2113740A39	CAP CER NPO 27P 5%	1
C110	2113740A43	CAP CER NPO 39P 5%	1
C111	2113741M45	CAP CER CL2 10N 10%	1
C112	2113740A55	CAP CER NPO 100P 5%	1
C113	2113740A39	CAP CER NPO 27P 5%	1
C114	J707809P13	CAP CER NPO 10P 5%	1
C115	J707809P18	CAP CER NPO 27P 5%	1
C116	J707809P20	CAP CER NPO 39P 5%	1
C117	J707809P25	CAP CER NPO 100P 5%	1
C118	2113741A33	CAP CER CL2 3N3 5%	1
C119	J707809P25	CAP CER NPO 100P 5% G1,G2,G3	1
C120	J707809P21	CAP CER NPO 47P 5%	1
C121	A700006P19	CAP MICA 27P 5% G1,G2,G3	1
C122	A700006P19	CAP MICA 27P 5% G1,G2,G3	1
C123	J707809P25	CAP CER NPO 100P 5% G1,G2,G3	1
C124	2113741M45	CAP CER CL2 10N 10% G1,G2,G3	1
C126	A700006P11	CAP MICA 15P 5% G1,G2,G3	1
C127	A700006P11	CAP MICA 15P 5% G1,G2,G3	1
C128	J707809P13	CAP CER NPO 10P 5% G4,G5,G6	1
C128	J707809P14	CAP CER NPO 12P 5% G1,G2,G3	1
C129	J707809P13	CAP CER NPO 10P 5% G4,G5,G6	1
C129	J707809P14	CAP CER NPO 12P 5% G1,G2,G3	1
C130	A700006P19	CAP MICA 27P 5%	1
C131	A700006P19	CAP MICA 27P 5%	1
C132	J707809P27	CAP CER NPO 150P 5%	1
C133	2113741M45	CAP CER CL2 10N 10%	1
C134	A700006P26	CAP MICA 47P 5% G1,G2,G3	1
C134	A700006P28	CAP MICA 56P 5% G4,G5,G6	1
C135	A700006P26	CAP MICA 47P 5% G1,G2,G3	1
C135	A700006P28	CAP MICA 56P 5% G3,G4,G5	1
C136	A700006P14	CAP MICA 18P 5%	1
C137	J707353P6	CAP ELECT 4U7 25V	1
C138	2113741C09	CAP CER CL2 47N 5%	1
C139	J707809P25	CAP CER NPO 100P 5%	1
C140	J707809P25	CAP CER NPO 100P 5%	1
C141	J707809P25	CAP CER NPO 100P 5%	1
C142	J707809P25	CAP CER NPO 100P 5%	1
C143	J707809P25	CAP CER NPO 100P 5%	1
C144	J707809P25	CAP CER NPO 100P 5%	1
C145	J707809P25	CAP CER NPO 100P 5%	1
C146	A700006P4	CAP PTFE 8P2 10%	1
C147	A700006P11	CAP MICA 15P 5%	1
C148	A700006P11	CAP MICA 15P 5%	1
C149	A700006P3	CAP PTFE 6P8 10%	1
C150	J707809P8	CAP CER NPO 3P9 .25P	1
C151	2113741A33	CAP CER CL2 3N3 5%	1
C153	J707809P1	CAP CER NPO 1P0 .25P	1
C154	J707809P1	CAP CER NPO 1P0 .25P	1
C155	J707809P25	CAP CER NPO 100P 5%	1
C160	2113740A55	CAP CER NPO 100P 5%	1
C161	2113740A55	CAP CER NPO 100P 5%	1
C162	J707353P3	CAP ELECT 0U47 50V	1
C163	2113740A55	CAP CER NPO 100P 5%	1
C164	2113741M45	CAP CER CL2 10N 10%	1
C165	2113741M45	CAP CER CL2 10N 10%	1
C166	2113740A55	CAP CER NPO 100P 5%	1
C167	2113741M45	CAP CER CL2 10N 10%	1
C168	2113741M45	CAP CER CL2 10N 10%	1
C169	2113741C05	CAP CER CL2 33N 5%	1
C170	2113740A55	CAP CER NPO 100P 5%	1
C171	2113740A55	CAP CER NPO 100P 5%	1
C172	2113741M45	CAP CER CL2 10N 10%	1
C173	2113741M21	CAP CER CL2 1N0 10%	1
C174	2113741A33	CAP CER CL2 3N3 5%	1
C175	J707809P25	CAP CER NPO 100P 5%	1
C201	2113741C17	CAP CER CL2 100N 5%	1
C202	J707444P8	CAP TA SOL 22U 16V	1
C203	J707444P6	CAP TA SOL 4U7 35V	1
C204	2113741M13	CAP CER CL2 470P 10%	1
C205	J706024P7	CAP ELECT 330U 25V	1
C301	J707809P25	CAP CER NPO 100P 5%	1
C302	J707809P15	CAP CER NPO 15P 5%	1
C303	J707809P15	CAP CER NPO 15P 5%	1
C304	J708287P1	CAP VAR CER 3.3/7.2PF	1
C305	2113740A21	CAP CER NPO 5P6 .25P	1
C306	J707483P6	CAP PHEN 0P82 5%	1
C307	2113740A55	CAP CER NPO 100P 5%	1
C308	2113740A24	CAP CER NPO 6P8 .25P	1
C309	J708287P1	CAP VAR CER 3.3/7.2PF	1

Pos	Code No.	Description	Qt
C310	2113741M13	CAP CER CL2 470P 10%	1
C311	2113740A41	CAP CER NP0 33P 5%	1
C312	2113740A63	CAP CER NP0 220P 5%	1
C313	2113741M13	CAP CER CL2 470P 10%	1
C314	2113740A11	CAP CER NP0 2P2 .25P	1
C315	2113740A27	CAP CER NP0 8P2 .25P	1
C316	J708287P1	CAP VAR CER 3.3/7.2PF	1
C317	J707444P2	CAP TA SOL 0U22 35V	1
C318	2113741M13	CAP CER CL2 470P 10%	1
C319	2113740A24	CAP CER NP0 6P8 .25P	1
C320	2113741M13	CAP CER CL2 470P 10%	1
C321	J708287P1	CAP VAR CER 3.3/7.2PF	1
C322	J707483P4	CAP PHEN 0P56 5%	1
C323	J707483P4	CAP PHEN 0P56 5%	1
C324	2113740A24	CAP CER NP0 6P8 .25P	1
C325	2113741M13	CAP CER CL2 470P 10%	1
C326	J708287P1	CAP VAR CER 3.3/7.2PF	1
C327	2113740A24	CAP CER NP0 6P8 .25P	1
C328	J707483P1	CAP PHEN 0P47 5%	1
C329	2113740A21	CAP CER NP0 5P6 .25P	1
C330	J708287P1	CAP VAR CER 3.3/7.2PF	1
C331	2113740A13	CAP CER NP0 2P7 .25P	1
C332	J708287P1	CAP VAR CER 3.3/7.2PF	1
C333	2113740A27	CAP CER NP0 8P2 .25P	1
C334	J707483P2	CAP PHEN 0P33 5%	1
C335	2113741M13	CAP CER CL2 470P 10%	1
C336	J708287P1	CAP VAR CER 3.3/7.2PF	1
C337	2113740A27	CAP CER NP0 8P2 .25P	1
C338	2113740A24	CAP CER NP0 6P8 .25P	1
C339	2113741M45	CAP CER CL2 10N 10%	1
C340	2113741M45	CAP CER CL2 10N 10%	1
C341	2113741M13	CAP CER CL2 470P 10%	1
C342	J708287P1	CAP VAR CER 3.3/7.2PF	1
C343	2113740A29	CAP CER NP0 10P 5%	1
C344	2113741M13	CAP CER CL2 470P 10%	1
C345	2113740A41	CAP CER NP0 33P 5%	1
C347	2113741M13	CAP CER CL2 470P 10%	1
C348	2113741M13	CAP CER CL2 470P 10%	1
C349	2113740A09	CAP CER NP0 1P8 .25P	1
C350	2113741M13	CAP CER CL2 470P 10%	1
C401	2113741A33	CAP CER CL2 3N3 5%	1
C402	2113741A33	CAP CER CL2 3N3 5%	1
C403	2113741A33	CAP CER CL2 3N3 5%	1
C404	2113740A19	CAP CER NP0 4P7 .25P	1
C405	2113741C17	CAP CER CL2 100N 5%	1
C406	2113740A21	CAP CER NP0 5P6 .25P	1
C407	2113740A19	CAP CER NP0 4P7 .25P	1
C408	2113741M21	CAP CER CL2 1N0 10%	1
C409	2113741A33	CAP CER CL2 3N3 5%	1
C410	J707444P8	CAP TA SOL 22U 16V	1
C411	2113741C17	CAP CER CL2 100N 5%	1
C412	2113741C17	CAP CER CL2 100N 5%	1
C413	2113740A33	CAP CER NP0 15P 5%	1
C414	2113741A33	CAP CER CL2 3N3 5%	1
C415	2113741A33	CAP CER CL2 3N3 5%	1
C416	J708702P16	CAP CER N750 18P 5%	1
C417	2113740A49	CAP CER NP0 56P 5%	1
C418	2113741M45	CAP CER CL2 10N 10%	1
C419	2113741C17	CAP CER CL2 100N 5%	1
C420	2113741M45	CAP CER CL2 10N 10%	1
C421	2113741C17	CAP CER CL2 100N 5%	1
C422	2113741C17	CAP CER CL2 100N 5%	1
C423	2113740A29	CAP CER NP0 10P 5%	1
C424	2113741A33	CAP CER CL2 3N3 5%	1
C425	J707412P13	CAP PYES 470N 10%	1
C426	2113740C25	CAP CER NP0 2N2 5%	1
C427	2113740A67	CAP CER NP0 330P 5%	1
C428	2113740A63	CAP CER NP0 220P 5% G3,G6	1
C428	2113740A65	CAP CER NP0 270P 5% G1,G2,G4,G5	1
C429	2113741M45	CAP CER CL2 10N 10%	1
C430	J707444P8	CAP TA SOL 22U 16V	1
C431	J707444P8	CAP TA SOL 22U 16V	1
C432	2113741C17	CAP CER CL2 100N 5%	1
C433	2113741C17	CAP CER CL2 100N 5%	1
C434	2113741A33	CAP CER CL2 3N3 5%	1
C435	2113740A03	CAP CER NP0 1P0 .25P	1
C436	2113741C17	CAP CER CL2 100N 5%	1
C501	J707412P11	CAP PYES 220N 10%	1
C502	J707412P11	CAP PYES 220N 10%	1
C503	J707412P11	CAP PYES 220N 10%	1
C504	A700235P3	CAP CER N150 1P5 .25P	1
C505	A700235P3	CAP CER N150 1P5 .25P	1
C506	A700235P6	CAP CER N150 2P7 .25P	1
C507	A700235P5	CAP CER N150 2P2 .25P	1
C508	A700235P10	CAP CER N150 5P6 .25P	1
C509	A700235P12	CAP CER N150 8P2 .25P	1
C510	A700235P9	CAP CER N150 4P7 .25P	1
C512	J707483P7	CAP PHEN 1P00 5%	1
C513	2113741M13	CAP CER CL2 470P 10%	1
C515	2113740A19	CAP CER NP0 4P7 .25P	1
C516	2113740A15	CAP CER NP0 3P3 .25P	1
C517	J707444P6	CAP TA SOL 4U7 35V	1
C518	2113740A13	CAP CER NP0 2P7 .25P	1
C519	2113741M13	CAP CER CL2 470P 10%	1
C520	2113740A17	CAP CER NP0 3P9 .25P	1
C521	2113740A19	CAP CER NP0 4P7 .25P	1
C522	2113741M13	CAP CER CL2 470P 10%	1
C523	2113740A21	CAP CER NP0 5P6 .25P	1
C525	2113741M13	CAP CER CL2 470P 10%	1
C526	2113740A31	CAP CER NP0 12P 5%	1
C527	2113741M13	CAP CER CL2 470P 10%	1
C528	2113740A59	CAP CER NP0 150P 5%	1
C529	J708287P1	CAP VAR CER 3.3/7.2PF	1
C530	2113740A21	CAP CER NP0 5P6 .25P	1
C531	J707483P7	CAP PHEN 1P00 5%	1
C532	2113740A21	CAP CER NP0 5P6 .25P	1
C533	J708287P1	CAP VAR CER 3.3/7.2PF	1
C534	2113740A15	CAP CER NP0 3P3 .25P	1
C535	2113740A15	CAP CER NP0 3P3 .25P	1
C536	2113741M13	CAP CER CL2 470P 10%	1
C537	2113741M13	CAP CER CL2 470P 10%	1
C538	2113741M13	CAP CER CL2 470P 10%	1
C539	2113741M13	CAP CER CL2 470P 10%	1
C540	2113741M13	CAP CER CL2 470P 10%	1
C541	2113741M13	CAP CER CL2 470P 10%	1
C542	2113741M13	CAP CER CL2 470P 10%	1

PARTS LIST FOR RADIO FREQUENCY BOARD RF666X : M905779GX BD REV. 3/L

Pos	Code No.	Description	Qt
C543	2113741M13	CAP CER CL2 470P 10%	1
C544	2113741M13	CAP CER CL2 470P 10%	1
C545	2113741M13	CAP CER CL2 470P 10%	1
C601	J707412P11	CAP PYES 220N 10%	1
C602	J707412P11	CAP PYES 220N 10%	1
C603	J707412P11	CAP PYES 220N 10%	1
C604	A700235P5	CAP CER N150 2P2 .25P	1
C605	A700235P3	CAP CER N150 1P5 .25P	1
C606	A700235P8	CAP CER N150 3P9 .25P	1
C607	A700235P9	CAP CER N150 4P7 .25P	1
C608	A700235P12	CAP CER N150 8P2 .25P	1
C609	A700235P33	CAP CER N150 13P 5%	1
C610	A700235P12	CAP CER N150 8P2 .25P	1
C611	2113740A15	CAP CER NP0 3P3 .25P	1
C612	2113740A19	CAP CER NP0 4P7 .25P	1
C613	J707444P6	CAP TA SOL 4U7 35V	1
C614	2113740A13	CAP CER NP0 2P7 .25P	1
C615	2113740A71	CAP CER NP0 470P 5%	1
C616	2113741M13	CAP CER CL2 470P 10%	1
C617	2113740A15	CAP CER NP0 3P3 .25P	1
C618	2113740A19	CAP CER NP0 4P7 .25P	1
C619	2113741M13	CAP CER CL2 470P 10%	1
C620	2113740A03	CAP CER NP0 1P0 .25P	1
C621	2113741M13	CAP CER CL2 470P 10%	1
C622	2113741M13	CAP CER CL2 470P 10%	1
C623	2113741M13	CAP CER CL2 470P 10%	1
C624	2113740A59	CAP CER NP0 150P 5%	1
C625	2113740A37	CAP CER NP0 22P 5%	1
C626	2113741M21	CAP CER CL2 1N0 10%	1
C627	2113741M45	CAP CER CL2 10N 10%	1
C628	2113740C21	CAP CER NP0 1N5 5%	1
C629	2113740A59	CAP CER NP0 150P 5%	1
C630	2113741C17	CAP CER CL2 100N 5%	1
C632	2113741C17	CAP CER CL2 100N 5%	1
C633	J707444P17	CAP TA SOL 47U 10V	1
C634	2113741C17	CAP CER CL2 100N 5%	1
C635	2113741M13	CAP CER CL2 470P 10%	1
C636	J707444P17	CAP TA SOL 47U 10V	1
C637	2113741C17	CAP CER CL2 100N 5%	1
C639	2113741A33	CAP CER CL2 3N3 5%	1
C640	J707412P9	CAP PYES 100N 10%	1
C641	J707412P13	CAP PYES 470N 10%	1
C642	J707412P13	CAP PYES 470N 10%	1
C643	2113741C09	CAP CER CL2 47N 5%	1
C644	2113740A13	CAP CER NP0 2P7 .25P	1
C645	2113740A63	CAP CER NP0 220P 5%	1
C647	2113740A29	CAP CER NP0 10P 5%	1
C648	2113740A63	CAP CER NP0 220P 5%	1
C653	J707444P6	CAP TA SOL 4U7 35V	1
C656	2113740A71	CAP CER NP0 470P 5%	1
C657	2113741M13	CAP CER CL2 470P 10%	1
C658	2113741M45	CAP CER CL2 10N 10%	1
C659	2113741M21	CAP CER CL2 1N0 10%	1
C660	2113741M13	CAP CER CL2 470P 10%	1
C661	2113741M13	CAP CER CL2 470P 10%	1
C662	2113741M13	CAP CER CL2 470P 10%	1
C663	2113741M13	CAP CER CL2 470P 10%	1
C664	2113741C17	CAP CER CL2 100N 5%	1
C665	2113741M13	CAP CER CL2 470P 10%	1
C666	2113741M13	CAP CER CL2 470P 10%	1
C667	2113741M13	CAP CER CL2 470P 10%	1
C668	2113741A41	CAP CER CL2 6N8 5%	1
C669	2113740A55	CAP CER NP0 100P 5%	1
C670	2113740A31	CAP CER NP0 12P 5%	1
C671	2113741C17	CAP CER CL2 100N 5%	1
C680	J708538P5	RES VAR CERM 10K 20% G5	1
D100	J706892P2	DIO SI PIN UM 9678	1
D101	A700047P3	DIO SI SIG 1N6263	1
D102	J707390P1	DIO SI SIG BAV 74	1
D301	J706892P2	DIO SI PIN UM 9678	1
D302	J706007P1	DIO SI CAP BB 505B	1
D303	J706007P1	DIO SI CAP BB 505B	1
D304	A700047P3	DIO SI SIG 1N6263	1
D305	J706007P1	DIO SI CAP BB 505B	1
D306	J706007P1	DIO SI CAP BB 505B	1
D307	J706007P1	DIO SI CAP BB 505B	1
D308	J706007P1	DIO SI CAP BB 505B	1
D309	J706007P1	DIO SI CAP BB 505B	1
D310	J706007P1	DIO SI CAP BB 505B	1
D311	J706007P1	DIO SI CAP BB 505B	1
D401	A700025P8	DIO SI ZENR 6V8 5% 0.4W	1
D501	J706007P1	DIO SI CAP BB 505B	1
D502	J706007P1	DIO SI CAP BB 505B	1
D503	J706007P1	DIO SI CAP BB 505B	1
D504	J706007P1	DIO SI CAP BB 505B	1
D505	J707769P2	DIO SI CAP BBY 31	1
D506	J707390P1	DIO SI SIG BAV 74	1
D507	J707769P1	DIO SI CAP BBY 31	1
D508	J707769P1	DIO SI CAP BBY 31	1
D601	J706007P1	DIO SI CAP BB 505B	1
D602	J706007P1	DIO SI CAP BB 505B	1
D603	J706007P1	DIO SI CAP BB 505B	1
D604	J706007P1	DIO SI CAP BB 505B	1
D605	J707390P1	DIO SI SIG BAV 74	1
D606	J708681P1	DIO SI SIG BAW 56	1
D607	J707390P1	DIO SI SIG BAV 74	1
D608	J707390P1	DIO SI SIG BAV 74	1
D610	J708681P1	DIO SI SIG BAW 56	1
D611	J707389P1	DIO SI SIG BAV 99	1
L100	K805653G2	COIL ASM 2 1/2T	1
L101	A700024P1	COIL RF FIX 0.1UH 10%	1
L102	K805653G2	COIL ASM 2 1/2T	1
L103	J707256P2	COIL FIX	1
L104	K805653G2	COIL ASM 2 1/2T	1
L105	J707256P2	COIL FIX	1
L106	K805653G1	COIL ASM 1 1/2T	1
L107	A701237P1	COIL	1
L108	J707339G1	COIL FIX ASM	1
L109	A700024P1	COIL RF FIX 0.1UH 10% G1,G2,G3	1
L110	J707339G1	COIL FIX ASM G1,G2,G3	1
L111	A701237P1	COIL G1,G2,G3	1
L112	J709287P1	CORE TOR FERR G1,G2,G3	1
L113	A700024P1	COIL RF FIX 0.1UH 10%	1
L114	J707339G1	COIL FIX ASM	1

PARTS LIST FOR RADIO FREQUENCY BOARD RF666X : M905779GX BD REV. 3/L

Pos	Code No.	Description	Qt
L115	A701237P1	COIL G1,G2,G3	1
L115	J707256P3	COIL FIX G4,G5,G6	1
L116	J708561P4	COIL FIXED	1
L117	A700024P3	COIL RF FIX 0.15UH 10%	1
L118	J709603P1	COIL	1
L119	J709603P1	COIL	1
L120	J709603P1	COIL	1
L121	A700024P25	COIL RF FIX 10UH 10%	1
L122	A700024P25	COIL RF FIX 10UH 10%	1
L123	J709287P1	CORE TOR FERR	1
L301	J707256P2	COIL FIX	1
L302	J707256P2	COIL FIX	1
L303	K805627G1	COIL RF FIXED 1 1/2T	1
L304	K805627G1	COIL RF FIXED 1 1/2T	1
L305	J707486P11	COIL RF FIX 2.2UH 10%	1
L306	K805627G1	COIL RF FIXED 1 1/2T	1
L307	K805627G1	COIL RF FIXED 1 1/2T	1
L308	K805627G1	COIL RF FIXED 1 1/2T	1
L309	K805627G1	COIL RF FIXED 1 1/2T	1
L311	K805627G1	COIL RF FIXED 1 1/2T	1
L312	J708428P2	COIL RF VAR 45 MHZ	1
L401	J707486P10	COIL RF FIX 1.5UH 10%	1
L403	K805570G2	COIL ASM	1
L404	K805570G1	COIL ASM	1
L405	J708428P1	COIL RF VAR 45 MHZ	1
L406	K805570G3	COIL ASM	1
L407	A700024P25	COIL RF FIX 10UH 10%	1
L408	J708428P2	COIL RF VAR 45 MHZ	1
L409	J707431P1	COIL RF VAR 455KHZ 25%	1
L410	J707431P1	COIL RF VAR 455KHZ 25%	1
L501	A700024P13	COIL RF FIX 1.0UH 10%	1
L502	A700024P13	COIL RF FIX 1.0UH 10%	1
L503	A700024P13	COIL RF FIX 1.0UH 10%	1
L504	A700024P13	COIL RF FIX 1.0UH 10%	1
L505	L855671P1	COIL RADIO FREQUENCY	1
L506	A700024P13	COIL RF FIX 1.0UH 10%	1
L507	A700024P13	COIL RF FIX 1.0UH 10%	1
L508	A700024P1	COIL RF FIX 0.1UH 10%	1
L509	K805527G1	COIL ASM	1
L510	J707256P3	COIL FIX	1
L511	J707256P3	COIL FIX	1
L512	K805653G1	COIL ASM 1 1/2T	1
L513	K805653G3	COIL ASM 3 1/2T	1
L601	A700024P13	COIL RF FIX 1.0UH 10%	1
L602	A700024P13	COIL RF FIX 1.0UH 10%	1
L603	A700024P13	COIL RF FIX 1.0UH 10%	1
L604	A700024P13	COIL RF FIX 1.0UH 10%	1
L605	L855671P1	COIL RADIO FREQUENCY	1
L606	A700024P13	COIL RF FIX 1.0UH 10%	1
L607	A700024P13	COIL RF FIX 1.0UH 10%	1
L608	A700024P1	COIL RF FIX 0.1UH 10%	1
L609	K805653G6	COIL ASM 6 1/2T	1
L610	A700024P29	COIL RF FIX 22UH 10%	1
P102	J707064P112	CONN PWB FEM 12-CKT	1
P105	A701883P4	CONN PWB FEM RECP	1
Q100	J707388P1	TSTR NPN SI BFR 53	1
Q101	J707388P1	TSTR NPN SI BFR 53	1
Q102	A701940P1	TSTR NPN SI RF-PWR 0.4W	1
Q103	A700066P2	TSTR NPN SI RF-PWR 2.0W	1
Q104	J708167P2	TSTR NPN SI RF-PWR 23W G1,G2,G3	1
Q105	J708556P1	TSTR NPN SI RF-PWR 28W G1,G2,G3	1
Q105	J708167P2	TSTR NPN SI RF-PWR 23W G4,G5,G6	1
Q106	J707432P1	TSTR PNP SI BCX 18	1
Q107	J707386P1	TSTR NPN SI BCW 32	1
Q108	J708406P1	TSTR NPN SI BD 233	1
Q201	J707435P1	TSTR PNP SI BC 369	1
Q202	J707386P1	TSTR NPN SI BCW 32	1
Q203	J707432P1	TSTR PNP SI BCX 18	1
Q204	J707386P1	TSTR NPN SI BCW 32	1
Q301	J706011P2	TSTR NPN SI BFR 91A	1
Q302	J708315P1	TSTR JFET SI 2N5245	1
Q401	J707817P1	TSTR JFET SI J 309	1
Q402	J707817P1	TSTR JFET SI J 309	1
Q403	J707419P1	TSTR JFET SI BF511	1
Q404	J708418P1	TSTR NPN SI BFS 20	1
Q405	J708418P1	TSTR NPN SI BFS 20	1
Q406	J708418P1	TSTR NPN SI BFS 20	1
Q407	J707386P1	TSTR NPN SI BCW 32	1
Q408	J707387P1	TSTR PNP SI BCW 30	1
Q501	J707817P1	TSTR JFET SI J 309	1
Q502	J707388P1	TSTR NPN SI BFR 53	1
Q503	J707388P1	TSTR NPN SI BFR 53	1
Q504	J708318P1	TSTR PNP SI BFT 92	1
Q601	J707817P1	TSTR JFET SI J 309	1
Q602	J707388P1	TSTR NPN SI BFR 53	1
Q603	J707388P1	TSTR NPN SI BFR 53	1
Q604	J708318P1	TSTR PNP SI BFT 92	1
Q605	J707386P1	TSTR NPN SI BCW 32	1
Q606	J707386P1	TSTR NPN SI BCW 32	1
Q607	J707386P1	TSTR NPN SI BCW 32	1
Q608	J707433P1	TSTR MFET SI BF 989	1
Q609	J707419P1	TSTR JFET SI BF511	1
R100	J707385P152	RES MFLM 1/8W 1K5 5%	1
R101	J707385P562	RES MFLM 1/8W 5K6 5%	1
R102	J707385P470	RES MFLM 1/8W 47R 5%	1
R103	J707385P152	RES MFLM 1/8W 1K5 5%	1
R104	J707385P562	RES MFLM 1/8W 5K6 5%	1
R105	J707385P270	RES MFLM 1/8W 27R 5%	1
R106	J707385P270	RES MFLM 1/8W 27R 5%	1
R107	J707385P102	RES MFLM 1/8W 1K0 5%	1
R108	J707385P100	RES MFLM 1/8W 10R 5%	1
R109	J707385P100	RES MFLM 1/8W 10R 5%	1
R110	J707385P947	RES MFLM 1/8W 4R7 20%	1
R111	J707385P102	RES MFLM 1/8W 1K0 5%	1
R112	J707385P270	RES MFLM 1/8W 27R 5%	1
R113	J707385P100	RES MFLM 1/8W 10R 5% G1,G2,G3	1
R114	J707385P100	RES MFLM 1/8W 10R 5% G1,G2,G3	1
R115	J707385P100	RES MFLM 1/8W 10R 5%	1
R116	J707385P100	RES MFLM 1/8W 10R 5%	1
R117	J707385P100	RES MFLM 1/8W 10R 5%	1
R119	J707385P473	RES MFLM 1/8W 47K 5%	1
R120	J707385P473	RES MFLM 1/8W 47K 5%	1

Pos	Code No.	Description	Qt
R121	J707385P102	RES MFLM 1/8W 1K0 5% G4,G5,G6	1
R121	J707385P221	RES MFLM 1/8W 220R 5% G1,G2,G3	1
R122	J707385P102	RES MFLM 1/8W 1K0 5% G4,G5,G6	1
R122	J707385P221	RES MFLM 1/8W 220R 5% G1,G2,G3	1
R123	J707385P220	RES MFLM 1/8W 22R 5%	1
R124	J707385P220	RES MFLM 1/8W 22R 5%	1
R125	J707385P391	RES MFLM 1/8W 390R 5% G1,G2,G3	1
R126	J707385P391	RES MFLM 1/8W 390R 5% G1,G2,G3	1
R127	J707385P101	RES MFLM 1/8W 100R 5% G1,G2,G3	1
R130	J707385P103	RES MFLM 1/8W 10K 5%	1
R131	J707385P472	RES MFLM 1/8W 4K7 5% G1,G2,G3	1
R131	J707385P473	RES MFLM 1/8W 47K 5% G4,G5,G6	1
R132	J708538P9	RES VAR CERM 200K 20%	1
R133	J708538P4	RES VAR CERM 5K0 20%	1
R134	J707385P100	RES MFLM 1/8W 10R 5%	1
R135	J706147P2	RES THERM PTC 80R 25% G1,G2,G3	1
R136	J707385P101	RES MFLM 1/8W 100R 5% G4,G5,G6	1
R136	J707385P153	RES MFLM 1/8W 15K 5% G1,G2,G3	1
R137	J707385P473	RES MFLM 1/8W 47K 5%	1
R138	J707385P333	RES MFLM 1/8W 33K 5%	1
R139	J707385P333	RES MFLM 1/8W 33K 5%	1
R140	J707385P104	RES MFLM 1/8W 100K 5%	1
R141	J707385P222	RES MFLM 1/8W 2K2 5%	1
R142	J707385P222	RES MFLM 1/8W 2K2 5%	1
R143	J707385P104	RES MFLM 1/8W 100K 5%	1
R144	J707385P682	RES MFLM 1/8W 6K8 5%	1
R145	J707385P154	RES MFLM 1/8W 150K 5%	1
R146	J707385P472	RES MFLM 1/8W 4K7 5%	1
R147	J707385P123	RES MFLM 1/8W 12K 5%	1
R148	J707385P331	RES MFLM 1/8W 330R 5%	1
R149	J707385P683	RES MFLM 1/8W 68K 5%	1
R150	J707385P104	RES MFLM 1/8W 100K 5%	1
R151	J707385P274	RES MFLM 1/8W 270K 5%	1
R152	J707385P562	RES MFLM 1/8W 5K6 5%	1
R153	J707385P222	RES MFLM 1/8W 2K2 5%	1
R154	J707385P102	RES MFLM 1/8W 1K0 5%	1
R155	J707385P472	RES MFLM 1/8W 4K7 5%	1
R156	J707385P223	RES MFLM 1/8W 22K 5%	1
R157	J709725P1	RES THERM PTC 1K0	1
R158	J707385P472	RES MFLM 1/8W 4K7 5%	1
R167	2113740A55	CAP CER NPO 100P 5% G2	1
R201	J707385P561	RES MFLM 1/8W 560R 5%	1
R202	J707385P271	RES MFLM 1/8W 270R 5%	1
R203	J707385P153	RES MFLM 1/8W 15K 5%	1
R204	J707385P153	RES MFLM 1/8W 15K 5%	1
R205	J707385P472	RES MFLM 1/8W 4K7 5%	1
R206	J707385P272	RES MFLM 1/8W 2K7 5%	1

Pos	Code No.	Description	Qt
R207	J707385P563	RES MFLM 1/8W 56K 5%	1
R208	J707385P563	RES MFLM 1/8W 56K 5%	1
R209	J707385P271	RES MFLM 1/8W 270R 5%	1
R301	J707385P473	RES MFLM 1/8W 47K 5%	1
R302	J707385P221	RES MFLM 1/8W 220R 5%	1
R303	J707385P104	RES MFLM 1/8W 100K 5%	1
R304	J707385P104	RES MFLM 1/8W 100K 5%	1
R306	J707385P222	RES MFLM 1/8W 2K2 5%	1
R307	J707385P681	RES MFLM 1/8W 680R 5%	1
R308	J707385P560	RES MFLM 1/8W 56R 5%	1
R309	J707385P270	RES MFLM 1/8W 27R 5%	1
R310	J707385P104	RES MFLM 1/8W 100K 5%	1
R311	J707385P270	RES MFLM 1/8W 27R 5%	1
R312	J707385P104	RES MFLM 1/8W 100K 5%	1
R313	J707385P104	RES MFLM 1/8W 100K 5%	1
R314	J707385P104	RES MFLM 1/8W 100K 5%	1
R315	J707385P104	RES MFLM 1/8W 100K 5%	1
R316	J707385P104	RES MFLM 1/8W 100K 5%	1
R317	J707385P272	RES MFLM 1/8W 2K7 5%	1
R318	J707385P100	RES MFLM 1/8W 10R 5%	1
R319	J707385P101	RES MFLM 1/8W 100R 5%	1
R320	J707385P103	RES MFLM 1/8W 10K 5%	1
R321	J707385P270	RES MFLM 1/8W 27R 5%	1
R322	J707385P104	RES MFLM 1/8W 100K 5%	1
R323	J707385P102	RES MFLM 1/8W 1K0 5%	1
R324	J707385P101	RES MFLM 1/8W 100R 5%	1
R401	J707385P560	RES MFLM 1/8W 56R 5%	1
R402	J707385P100	RES MFLM 1/8W 10R 5%	1
R403	J707385P332	RES MFLM 1/8W 3K3 5%	1
R405	J707385P100	RES MFLM 1/8W 10R 5%	1
R406	J707385P820	RES MFLM 1/8W 82R 5%	1
R407	J707385P470	RES MFLM 1/8W 47R 5%	1
R408	J707385P470	RES MFLM 1/8W 47R 5%	1
R410	J707385P272	RES MFLM 1/8W 2K7 5%	1
R411	J707385P682	RES MFLM 1/8W 6K8 5%	1
R412	J707385P272	RES MFLM 1/8W 2K7 5%	1
R413	J707385P471	RES MFLM 1/8W 470R 5%	1
R414	J707385P220	RES MFLM 1/8W 22R 5%	1
R415	J707385P222	RES MFLM 1/8W 2K2 5%	1
R416	J707385P562	RES MFLM 1/8W 5K6 5%	1
R417	J707385P103	RES MFLM 1/8W 10K 5%	1
R418	J707385P153	RES MFLM 1/8W 15K 5%	1
R419	J707385P182	RES MFLM 1/8W 1K8 5%	1
R420	J707385P182	RES MFLM 1/8W 1K8 5%	1
R421	J707385P182	RES MFLM 1/8W 1K8 5%	1
R422	J707385P473	RES MFLM 1/8W 47K 5%	1
R423	J707385P153	RES MFLM 1/8W 15K 5%	1
R424	J708538P5	RES VAR CERM 10K 20%	1
R425	J707385P272	RES MFLM 1/8W 2K7 5%	1
R426	J707385P333	RES MFLM 1/8W 33K 5% G1,G4	1
R426	J707385P473	RES MFLM 1/8W 47K 5% G2,G3,G5,G6	1
R427	J707385P393	RES MFLM 1/8W 39K 5% G2,G5	1
R427	J707385P473	RES MFLM 1/8W 47K 5% G1,G3,G4,G6	1
R428	J707385P393	RES MFLM 1/8W 39K 5% G1,G4	1

Pos	Code No.	Description	Qt
R428	J707385P563	RES MFLM 1/8W 56K 5% G2,G3,G5,G6	1
R429	J707385P104	RES MFLM 1/8W 100K 5%	1
R430	J707385P334	RES MFLM 1/8W 330K 5%	1
R431	J707385P473	RES MFLM 1/8W 47K 5%	1
R432	J707385P473	RES MFLM 1/8W 47K 5%	1
R433	J707385P271	RES MFLM 1/8W 270R 5%	1
R434	J707385P102	RES MFLM 1/8W 1K0 5%	1
R435	J706147P3	RES THERM PTC 250R 25%	1
R436	J707385P392	RES MFLM 1/8W 3K9 5%	1
R437	J707406P7	RES THERM NTC 220R 10%	1
R438	J707385P222	RES MFLM 1/8W 2K2 5%	1
R439	J707385P392	RES MFLM 1/8W 3K9 5%	1
R440	J707385P392	RES MFLM 1/8W 3K9 5%	1
R441	J707385P101	RES MFLM 1/8W 100R 5%	1
R442	J708538P6	RES VAR CERM 20K 20%	1
R444	J707385P473	RES MFLM 1/8W 47K 5%	1
R445	J707385P273	RES MFLM 1/8W 27K 5%	1
R446	J707385P224	RES MFLM 1/8W 220K 5%	1
R447	J707385P392	RES MFLM 1/8W 3K9 5%	1
R448	J707385P101	RES MFLM 1/8W 100R 5%	1
R449	J707385P470	RES MFLM 1/8W 47R 5%	1
R450	J707385P103	RES MFLM 1/8W 10K 5%	1
R451	J707385P332	RES MFLM 1/8W 3K3 5%	1
R452	J707385P332	RES MFLM 1/8W 3K3 5%	1
R501	J707385P122	RES MFLM 1/8W 1K2 5%	1
R502	J707385P122	RES MFLM 1/8W 1K2 5%	1
R503	J707385P122	RES MFLM 1/8W 1K2 5%	1
R504	J707385P104	RES MFLM 1/8W 100K 5%	1
R505	J707385P104	RES MFLM 1/8W 100K 5%	1
R506	J707385P104	RES MFLM 1/8W 100K 5%	1
R508	J707385P103	RES MFLM 1/8W 10K 5%	1
R509	J707385P100	RES MFLM 1/8W 10R 5%	1
R510	J707385P332	RES MFLM 1/8W 3K3 5%	1
R512	J707385P271	RES MFLM 1/8W 270R 5% ¤	1
R513	J707385P183	RES MFLM 1/8W 18K 5%	1
R514	J707385P472	RES MFLM 1/8W 4K7 5%	1
R515	J707385P271	RES MFLM 1/8W 270R 5%	1
R517	J707385P101	RES MFLM 1/8W 100R 5%	1
R520	J707385P682	RES MFLM 1/8W 6K8 5%	1
R521	J707385P152	RES MFLM 1/8W 1K5 5%	1
R522	J707385P680	RES MFLM 1/8W 68R 5%	1
R523	J707385P222	RES MFLM 1/8W 2K2 5%	1
R524	J707385P472	RES MFLM 1/8W 4K7 5%	1
R525	J707385P680	RES MFLM 1/8W 68R 5%	1
R526	J707385P104	RES MFLM 1/8W 100K 5%	1
R527	J707385P104	RES MFLM 1/8W 100K 5%	1
R528	J707385P103	RES MFLM 1/8W 10K 5%	1
R529	J707385P150	RES MFLM 1/8W 15R 5%	1
R530	J707385P182	RES MFLM 1/8W 1K8 5%	1
R531	J707385P682	RES MFLM 1/8W 6K8 5%	1
R532	J707385P392	RES MFLM 1/8W 3K9 5%	1
R601	J707385P122	RES MFLM 1/8W 1K2 5%	1
R602	J707385P122	RES MFLM 1/8W 1K2 5%	1
R603	J707385P122	RES MFLM 1/8W 1K2 5%	1
R604	J707385P104	RES MFLM 1/8W 100K 5%	1
R605	J707385P104	RES MFLM 1/8W 100K 5%	1
R606	J707385P104	RES MFLM 1/8W 100K 5%	1
R607	J707385P561	RES MFLM 1/8W 560R 5%	1

Pos	Code No.	Description	Qt
R608	J707385P221	RES MFLM 1/8W 220R 5%	1
R609	J707385P472	RES MFLM 1/8W 4K7 5%	1
R610	J707385P183	RES MFLM 1/8W 18K 5%	1
R611	J707385P271	RES MFLM 1/8W 270R 5%	1
R612	J707385P223	RES MFLM 1/8W 22K 5%	1
R613	J707385P101	RES MFLM 1/8W 100R 5%	1
R614	J707385P682	RES MFLM 1/8W 6K8 5%	1
R615	J707385P222	RES MFLM 1/8W 2K2 5%	1
R616	J707385P101	RES MFLM 1/8W 100R 5%	1
R617	J707385P101	RES MFLM 1/8W 100R 5%	1
R618	J707385P102	RES MFLM 1/8W 1K0 5%	1
R619	J707385P102	RES MFLM 1/8W 1K0 5%	1
R620	J707385P272	RES MFLM 1/8W 2K7 5%	1
R621	J707385P330	RES MFLM 1/8W 33R 5%	1
R622	J707385P102	RES MFLM 1/8W 1K0 5%	1
R623	J707385P123	RES MFLM 1/8W 12K 5%	1
R624	J707385P223	RES MFLM 1/8W 22K 5%	1
R625	J707385P470	RES MFLM 1/8W 47R 5%	1
R626	J707385P100	RES MFLM 1/8W 10R 5%	1
R627	J707385P103	RES MFLM 1/8W 10K 5%	1
R628	J707385P224	RES MFLM 1/8W 220K 5%	1
R629	J707385P393	RES MFLM 1/8W 39K 5% G1,G2,G4,G5	1
R629	J707385P823	RES MFLM 1/8W 82K 5% G3,G6	1
R630	J707385P100	RES MFLM 1/8W 10R 5% G1,G4,G5,G6	1
R631	J707385P332	RES MFLM 1/8W 3K3 5% G1,G2,G4,G5	1
R632	J707385P393	RES MFLM 1/8W 39K 5%	1
R633	J707385P223	RES MFLM 1/8W 22K 5%	1
R634	J707385P470	RES MFLM 1/8W 47R 5%	1
R635	J707385P102	RES MFLM 1/8W 1K0 5%	1
R636	J707385P332	RES MFLM 1/8W 3K3 5%	1
R637	J707385P181	RES MFLM 1/8W 180R 5%	1
R638	J707385P154	RES MFLM 1/8W 150K 5% G1,G2,G4,G5	1
R638	J707385P823	RES MFLM 1/8W 82K 5% G3,G6	1
R639	J707385P682	RES MFLM 1/8W 6K8 5% G1,G2,G4,G5	1
R639	J707385P822	RES MFLM 1/8W 8K2 5% G3,G6	1
R640	J707385P105	RES MFLM 1/8W 1M0 10%	1
R641	J707385P184	RES MFLM 1/8W 180K 5%	1
R642	J707385P184	RES MFLM 1/8W 180K 5%	1
R643	J707385P105	RES MFLM 1/8W 1M0 10%	1
R644	J707385P224	RES MFLM 1/8W 220K 5%	1
R645	J707385P103	RES MFLM 1/8W 10K 5%	1
R646	J707385P472	RES MFLM 1/8W 4K7 5%	1
R647	J707385P333	RES MFLM 1/8W 33K 5%	1
R648	J707385P683	RES MFLM 1/8W 68K 5%	1
R649	J707385P104	RES MFLM 1/8W 100K 5%	1
R650	J707385P223	RES MFLM 1/8W 22K 5%	1
R651	J707385P104	RES MFLM 1/8W 100K 5%	1
R652	J707385P472	RES MFLM 1/8W 4K7 5%	1
R653	J707385P333	RES MFLM 1/8W 33K 5%	1
R654	J707385P562	RES MFLM 1/8W 5K6 5%	1
R655	J707385P183	RES MFLM 1/8W 18K 5%	1

PARTS LIST FOR RADIO FREQUENCY BOARD RF666X : M905779GX BD REV. 3/L

Pos	Code No.	Description	Qt
R656	J707385P393	RES MFLM 1/8W 39K 5%	1
R657	J707385P823	RES MFLM 1/8W 82K 5%	1
R658	J707385P154	RES MFLM 1/8W 150K 5%	1
R659	J707385P102	RES MFLM 1/8W 1K0 5%	1
R660	J707385P333	RES MFLM 1/8W 33K 5%	1
R661	J707385P473	RES MFLM 1/8W 47K 5%	1
R662	J707385P393	RES MFLM 1/8W 39K 5%	1
R663	J708538P5	RES VAR CERM 10K 20%	1
R664	J707385P333	RES MFLM 1/8W 33K 5%	1
R665	J707385P824	RES MFLM 1/8W 820K 5%	1
R666	J707385P124	RES MFLM 1/8W 120K 5%	1
R667	J707385P124	RES MFLM 1/8W 120K 5%	1
R668	J707385P122	RES MFLM 1/8W 1K2 5%	1
R669	J707385P221	RES MFLM 1/8W 220R 5%	1
R670	J707385P103	RES MFLM 1/8W 10K 5%	1
R671	J707385P562	RES MFLM 1/8W 5K6 5%	1
R672	J707385P822	RES MFLM 1/8W 8K2 5%	1
R673	J707385P822	RES MFLM 1/8W 8K2 5%	1
R674	J707385P101	RES MFLM 1/8W 100R 5%	1
R675	J708538P5	RES VAR CERM 10K 20%	1
R676	J707385P123	RES MFLM 1/8W 12K 5%	1
R677	J708538P5	RES VAR CERM 10K 20%	1
R678	J707385P821	RES MFLM 1/8W 820R 5%	1
R679	J707385P683	RES MFLM 1/8W 68K 5%	1
R680	J708538P6	RES VAR CERM 20K 20%	1
R681	J707385P683	RES MFLM 1/8W 68K 5%	1
R682	J707385P331	RES MFLM 1/8W 330R 5%	1
R683	J707385P681	RES MFLM 1/8W 680R 5%	1
R684	J707385P105	RES MFLM 1/8W 1M0 10%	1
R685	J707385P183	RES MFLM 1/8W 18K 5%	1
R686	J707385P103	RES MFLM 1/8W 10K 5%	1
R687	J707385P183	RES MFLM 1/8W 18K 5%	1
R688	J707385P103	RES MFLM 1/8W 10K 5%	1
R689	J707385P124	RES MFLM 1/8W 120K 5%	1
R690	J707385P152	RES MFLM 1/8W 1K5 5%	1
R691	J707385P223	RES MFLM 1/8W 22K 5%	1
R692	J707385P105	RES MFLM 1/8W 1M0 10%	1
R693	J707385P223	RES MFLM 1/8W 22K 5%	1
R694	J707385P223	RES MFLM 1/8W 22K 5%	1
R695	J707385P105	RES MFLM 1/8W 1M0 10%	1
R696	J707385P223	RES MFLM 1/8W 22K 5%	1
R697	J707385P223	RES MFLM 1/8W 22K 5%	1
R698	J707385P105	RES MFLM 1/8W 1M0 10%	1
R699	J707385P273	RES MFLM 1/8W 27K 5%	1
R700	J707385P103	RES MFLM 1/8W 10K 5%	1
R701	J707385P824	RES MFLM 1/8W 820K 5%	1
R702	J707385P824	RES MFLM 1/8W 820K 5%	1
R703	J707385P154	RES MFLM 1/8W 150K 5%	1
R704	J707385P561	RES MFLM 1/8W 560R 5%	1
R705	J707385P122	RES MFLM 1/8W 1K2 5%	1
R706	J707385P561	RES MFLM 1/8W 560R 5%	1
U100	J708165P2	IC LIN OP-AMP 324	1
U201	J708333P1	IC LIN VR FIX 4785	1
U401	J707449P1	IC LIN IF-AMP 3357	1
U402	M905766G1	INT CKT SQ 4002 G1,G4	1
U402	M905766G2	INT CKT SQ 4003 G3,G6	1
U402	M905766G3	INT CKT SQ 4004 G2,G5	1
U601	J707859P1	IC LIN OP-AMP 204	1
U602	J707859P1	IC LIN OP-AMP 204	1

Pos	Code No.	Description	Qt
U603	J707859P1	IC LIN OP-AMP 204	1
U604	J707859P1	IC LIN OP-AMP 204	1
U606	J707243P1	IC DIG REG 4094	1
U607	J707374P3	IC PLL PRESC 12017 G1,G2,G4,G4	1
U607	J707374P4	IC PLL PRESC 12018 G3,G6	1
U608	B800902P1	IC PLL SYN CUSTOM DES	1
U609	J707859P1	IC LIN OP-AMP 204	1
U610	J708503P2	IC LIN CMPAR LM 339	1
U615	J708621P2	CPLR OPTO PC 827	1
U616	J708503P2	IC LIN CMPAR LM 339	1
W001	J706451P1	WIRE STRAP G5	1
W004	J706451P1	WIRE STRAP	1
W1	A700184P1	RES WIRE JMPR OR JUMPER	1
W3	J707256P1	COIL FIX	1
W5	J708717P1	STRAP	1
Y401	J708426P1	CRYSTAL UNIT 44.5450MHZ	1
Z401	J708330P1	FLTR CRY 45.0 +/-7.5KHZ G1,G4	1
Z401	J708330P2	FLTR CRY 45.0 +/-6KHZ G2,G5	1
Z401	J708330P3	FLTR CRY 45.0 +/-3.75KHZ G3,G6	1
Z402	J707446P1	FLTR CER 455K +/-10KHZ G1,G4	1
Z402	J707446P3	FLTR CER 455K +/- 7.5KHZ G2,G5	1
Z402	J707446P4	FLTR CER 455K +/- 4.5KHZ G3,G6	1
Z403	J707446P1	FLTR CER 455K +/-10KHZ G1,G4	1
Z403	J707446P3	FLTR CER 455K +/- 7.5KHZ G2,G5	1
Z403	J707446P4	FLTR CER 455K +/- 4.5KHZ G3,G6	1
	M905780P1R3	BD PW SMD DS G1,G2,G3	1
	M905780P2R3	BD PW SMD DS G4,G5,G6	1
		NON REFERENCED ITEMS:	
	J706804P2	WASH INS CRYS FOR HC-18/U	1
	J706804P3	WASH INS CRYS FOR HC-45/U	2
	J708561P3	COIL FIXED	2
	J708966G1	HEAT SINK MODF	1
	K805569G1	SHIELD METALLIZED	1
	J709006P1	SPACER SELF CLINCHING G4,G5,G6	2

PARTS LIST FOR RADIO FREQUENCY BOARD RF666X : M905779GX BD REV. 3/K

Pos	Code No.	Description	Qt
		COMPONENTS REVISED SINCE LAST EDITION ARE MARKED ✱	
	M905779G1	RF6662S25 CH. SPAC. 25kHz/25W OUT	
	M905779G2	RF6663S25 CH. SPAC. 20kHz/25W OUT	
	M905779G3	RF6664S25 CH. SPAC. 12.5kHz/25W OUT	
	M905779G4	RF6662S6 CH. SPAC. 25kHz/6W OUT	
	M905779G5	RF6663S6 CH. SPAC. 20kHz/6W OUT	
	M905779G6	RF6664S6 CH. SPAC. 12.5kHz/6W OUT	
C100	2113740A29	CAP CER NPO 10P 5%	1
C101	2113740A33	CAP CER NPO 15P 5%	1
C102	2113741M45	CAP CER CL2 10N 10%	1
C103	2113740A17	CAP CER NPO 3P9 .25P	1
C104	2113740A17	CAP CER NPO 3P9 .25P	1
C105	2113740A39	CAP CER NPO 27P 5%	1
C107	2113740A55	CAP CER NPO 100P 5%	1
C108	2113740A33	CAP CER NPO 15P 5%	1
C109	2113740A39	CAP CER NPO 27P 5%	1
C110	2113740A43	CAP CER NPO 39P 5%	1
C111	2113741M45	CAP CER CL2 10N 10%	1
C112	2113740A55	CAP CER NPO 100P 5%	1
C113	2113740A39	CAP CER NPO 27P 5%	1
C114	J707809P13	CAP CER NPO 10P 5%	1
C115	J707809P18	CAP CER NPO 27P 5%	1
C116	J707809P20	CAP CER NPO 39P 5%	1
C117	J707809P25	CAP CER NPO 100P 5%	1
C118	2113741A33	CAP CER CL2 3N3 5%	1
C119	J707809P25	CAP CER NPO 100P 5% G1,G2,G3	1
C120	J707809P21	CAP CER NPO 47P 5%	1
C121	A700006P19	CAP MICA 27P 5% G1,G2,G3	1
C122	A700006P19	CAP MICA 27P 5% G1,G2,G3	1
C123	J707809P25	CAP CER NPO 100P 5% G1,G2,G3	1
C124	2113741M45	CAP CER CL2 10N 10% G1,G2,G3	1
C126	A700006P11	CAP MICA 15P 5% G1,G2,G3	1
C127	A700006P11	CAP MICA 15P 5% G1,G2,G3	1
C128	J707809P13	CAP CER NPO 10P 5% G4,G5,G6	1
C128	J707809P14	CAP CER NPO 12P 5% G1,G2,G3	1
C129	J707809P13	CAP CER NPO 10P 5% G4,G5,G6	1
C129	J707809P14	CAP CER NPO 12P 5% G1,G2,G3	1
C130	A700006P19	CAP MICA 27P 5%	1
C131	A700006P19	CAP MICA 27P 5%	1
C132	J707809P27	CAP CER NPO 150P 5%	1
C133	2113741M45	CAP CER CL2 10N 10%	1
C134	A700006P26	CAP MICA 47P 5% G1,G2,G3	1
C134	A700006P28	CAP MICA 56P 5% G4,G5,G6	1
C135	A700006P26	CAP MICA 47P 5% G1,G2,G3	1
C135	A700006P28	CAP MICA 56P 5% G3,G4,G5	1
C136	A700006P14	CAP MICA 18P 5%	1
C137	J707353P6	CAP ELECT 4U7 25V	1
C138	2113741C09	CAP CER CL2 47N 5%	1
C139	J707809P25	CAP CER NPO 100P 5%	1
C140	J707809P25	CAP CER NPO 100P 5%	1
C141	J707809P25	CAP CER NPO 100P 5%	1
C142	J707809P25	CAP CER NPO 100P 5%	1
C143	J707809P25	CAP CER NPO 100P 5%	1
C144	J707809P25	CAP CER NPO 100P 5%	1
C145	J707809P25	CAP CER NPO 100P 5%	1
C146	A700006P4	CAP PTFE 8P2 10%	1
C147	A700006P11	CAP MICA 15P 5%	1
C148	A700006P11	CAP MICA 15P 5%	1
C149	A700006P3	CAP PTFE 6P8 10%	1
C150	J707809P8	CAP CER NPO 3P9 .25P	1
C151	2113741A33	CAP CER CL2 3N3 5%	1
C153	J707809P1	CAP CER NPO 1P0 .25P	1
C154	J707809P1	CAP CER NPO 1P0 .25P	1
C155	J707809P25	CAP CER NPO 100P 5%	1
C160	2113740A55	CAP CER NPO 100P 5%	1
C161	2113740A55	CAP CER NPO 100P 5%	1
C162	J707353P3	CAP ELECT 0U47 50V	1
C163	2113740A55	CAP CER NPO 100P 5%	1
C164	2113741M45	CAP CER CL2 10N 10% ✱	1
C165	2113741M45	CAP CER CL2 10N 10%	1
C166	2113740A55	CAP CER NPO 100P 5%	1
C167	2113741M45	CAP CER CL2 10N 10% ✱	1
C168	2113741M45	CAP CER CL2 10N 10%	1
C169	2113741C05	CAP CER CL2 33N 5% ✱	1
C170	2113740A55	CAP CER NPO 100P 5%	1
C171	2113740A55	CAP CER NPO 100P 5%	1
C172	2113741M45	CAP CER CL2 10N 10% ✱	1
C173	2113741M21	CAP CER CL2 1N0 10% ✱	1
C174	2113741A33	CAP CER CL2 3N3 5% ✱	1
C175	J707809P25	CAP CER NPO 100P 5% ✱	1
C201	2113741C17	CAP CER CL2 100N 5%	1
C202	J707444P8	CAP TA SOL 22U 16V	1
C203	J707444P6	CAP TA SOL 4U7 35V	1
C204	2113741M13	CAP CER CL2 470P 10%	1
C205	J706024P7	CAP ELECT 330U 25V ✱	1
C301	J707809P25	CAP CER NPO 100P 5%	1
C302	J707809P15	CAP CER NPO 15P 5%	1
C303	J707809P15	CAP CER NPO 15P 5%	1
C304	J708287P1	CAP VAR CER 3.3/7.2PF	1
C305	2113740A21	CAP CER NPO 5P6 .25P	1
C306	J707483P6	CAP PHEN 0P82 5%	1
C307	2113740A55	CAP CER NPO 100P 5%	1
C308	2113740A24	CAP CER NPO 6P8 .25P	1
C309	J708287P1	CAP VAR CER 3.3/7.2PF	1

Pos	Code No.	Description	Qt
C310	2113741M13	CAP CER CL2 470P 10%	1
C311	2113740A41	CAP CER NP0 33P 5%	1
C312	2113740A63	CAP CER NP0 220P 5%	1
C313	2113741M13	CAP CER CL2 470P 10%	1
C314	2113740A11	CAP CER NP0 2P2 .25P	1
C315	2113740A27	CAP CER NP0 8P2 .25P	1
C316	J708287P1	CAP VAR CER 3.3/7.2PF	1
C317	J707444P2	CAP TA SOL 0U22 35V	1
C318	2113741M13	CAP CER CL2 470P 10%	1
C319	2113740A24	CAP CER NP0 6P8 .25P	1
C320	2113741M13	CAP CER CL2 470P 10%	1
C321	J708287P1	CAP VAR CER 3.3/7.2PF	1
C322	J707483P4	CAP PHEN 0P56 5%	1
C323	J707483P4	CAP PHEN 0P56 5%	1
C324	2113740A24	CAP CER NP0 6P8 .25P	1
C325	2113741M13	CAP CER CL2 470P 10%	1
C326	J708287P1	CAP VAR CER 3.3/7.2PF	1
C327	2113740A24	CAP CER NP0 6P8 .25P	1
C328	J707483P1	CAP PHEN 0P47 5%	1
C329	2113740A21	CAP CER NP0 5P6 .25P	1
C330	J708287P1	CAP VAR CER 3.3/7.2PF	1
C331	2113740A13	CAP CER NP0 2P7 .25P	1
C332	J708287P1	CAP VAR CER 3.3/7.2PF	1
C333	2113740A27	CAP CER NP0 8P2 .25P	1
C334	J707483P2	CAP PHEN 0P33 5%	1
C335	2113741M13	CAP CER CL2 470P 10%	1
C336	J708287P1	CAP VAR CER 3.3/7.2PF	1
C337	2113740A27	CAP CER NP0 8P2 .25P	1
C338	2113740A24	CAP CER NP0 6P8 .25P	1
C339	2113741M45	CAP CER CL2 10N 10%	1
C340	2113741M45	CAP CER CL2 10N 10%	1
C341	2113741M13	CAP CER CL2 470P 10%	1
C342	J708287P1	CAP VAR CER 3.3/7.2PF	1
C343	2113740A29	CAP CER NP0 10P 5%	1
C344	2113741M13	CAP CER CL2 470P 10%	1
C345	2113740A41	CAP CER NP0 33P 5%	1
C347	2113741M13	CAP CER CL2 470P 10%	1
C348	2113741M13	CAP CER CL2 470P 10%	1
C349	2113740A09	CAP CER NP0 1P8 .25P	1
C350	2113741M13	CAP CER CL2 470P 10%	1
C401	2113741A33	CAP CER CL2 3N3 5%	1
C402	2113741A33	CAP CER CL2 3N3 5%	1
C403	2113741A33	CAP CER CL2 3N3 5%	1
C404	2113740A19	CAP CER NP0 4P7 .25P	1
C405	2113741C17	CAP CER CL2 100N 5%	1
C406	2113740A21	CAP CER NP0 5P6 .25P	1
C407	2113740A19	CAP CER NP0 4P7 .25P	1
C408	2113741M21	CAP CER CL2 1N0 10%	1
C409	2113741A33	CAP CER CL2 3N3 5%	1
C410	J707444P8	CAP TA SOL 22U 16V	1
C411	2113741C17	CAP CER CL2 100N 5%	1
C412	2113741C17	CAP CER CL2 100N 5%	1
C413	2113740A33	CAP CER NP0 15P 5%	1
C414	2113741A33	CAP CER CL2 3N3 5%	1
C415	2113741A33	CAP CER CL2 3N3 5%	1
C416	J708702P16	CAP CER N750 18P 5%	1
C417	2113740A49	CAP CER NP0 56P 5%	1
C418	2113741M45	CAP CER CL2 10N 10%	1
C419	2113741C17	CAP CER CL2 100N 5%	1
C420	2113741M45	CAP CER CL2 10N 10%	1
C421	2113741C17	CAP CER CL2 100N 5%	1
C422	2113741C17	CAP CER CL2 100N 5%	1
C423	2113740A29	CAP CER NP0 10P 5%	1
C424	2113741A33	CAP CER CL2 3N3 5%	1
C425	J707412P13	CAP PYES 470N 10%	1
C426	2113740C25	CAP CER NP0 2N2 5%	1
C427	2113740A67	CAP CER NP0 330P 5%	1
C428	2113740A63	CAP CER NP0 220P 5% G3,G6	1
C428	2113740A65	CAP CER NP0 270P 5% G1,G2,G4,G5	1
C429	2113741M45	CAP CER CL2 10N 10%	1
C430	J707444P8	CAP TA SOL 22U 16V	1
C431	J707444P8	CAP TA SOL 22U 16V	1
C432	2113741C17	CAP CER CL2 100N 5%	1
C433	2113741C17	CAP CER CL2 100N 5%	1
C434	2113741A33	CAP CER CL2 3N3 5%	1
C435	2113740A03	CAP CER NP0 1P0 .25P	1
C436	2113741C17	CAP CER CL2 100N 5%	1
C501	J707412P11	CAP PYES 220N 10%	1
C502	J707412P11	CAP PYES 220N 10%	1
C503	J707412P11	CAP PYES 220N 10%	1
C504	A700235P3	CAP CER N150 1P5 .25P	1
C505	A700235P3	CAP CER N150 1P5 .25P	1
C506	A700235P6	CAP CER N150 2P7 .25P	1
C507	A700235P5	CAP CER N150 2P2 .25P	1
C508	A700235P10	CAP CER N150 5P6 .25P	1
C509	A700235P12	CAP CER N150 8P2 .25P	1
C510	A700235P9	CAP CER N150 4P7 .25P	1
C512	J707483P7	CAP PHEN 1P00 5%	1
C513	2113741M13	CAP CER CL2 470P 10%	1
C515	2113740A19	CAP CER NP0 4P7 .25P	1
C516	2113740A15	CAP CER NP0 3P3 .25P	1
C517	J707444P6	CAP TA SOL 4U7 35V	1
C518	2113740A13	CAP CER NP0 2P7 .25P	1
C519	2113741M13	CAP CER CL2 470P 10%	1
C520	2113740A17	CAP CER NP0 3P9 .25P	1
C521	2113740A19	CAP CER NP0 4P7 .25P	1
C522	2113741M13	CAP CER CL2 470P 10%	1
C523	2113740A21	CAP CER NP0 5P6 .25P	1
C525	2113741M13	CAP CER CL2 470P 10%	1
C526	2113740A31	CAP CER NP0 12P 5%	1
C527	2113741M13	CAP CER CL2 470P 10%	1
C528	2113740A59	CAP CER NP0 150P 5%	1
C529	J708287P1	CAP VAR CER 3.3/7.2PF	1
C530	2113740A21	CAP CER NP0 5P6 .25P	1
C531	J707483P7	CAP PHEN 1P00 5%	1
C532	2113740A21	CAP CER NP0 5P6 .25P	1
C533	J708287P1	CAP VAR CER 3.3/7.2PF	1
C534	2113740A15	CAP CER NP0 3P3 .25P	1
C535	2113740A15	CAP CER NP0 3P3 .25P	1
C536	2113741M13	CAP CER CL2 470P 10%	1
C537	2113741M13	CAP CER CL2 470P 10%	1
C538	2113741M13	CAP CER CL2 470P 10%	1
C539	2113741M13	CAP CER CL2 470P 10%	1
C540	2113741M13	CAP CER CL2 470P 10%	1
C541	2113741M13	CAP CER CL2 470P 10%	1
C542	2113741M13	CAP CER CL2 470P 10%	1

PARTS LIST FOR RADIO FREQUENCY BOARD RF666X : M905779GX BD REV. 3/K

Pos	Code No.	Description	Qt
C543	2113741M13	CAP CER CL2 470P 10%	1
C544	2113741M13	CAP CER CL2 470P 10%	1
C545	2113741M13	CAP CER CL2 470P 10%	1
C601	J707412P11	CAP PYES 220N 10%	1
C602	J707412P11	CAP PYES 220N 10%	1
C603	J707412P11	CAP PYES 220N 10%	1
C604	A700235P5	CAP CER N150 2P2 .25P *	1
C605	A700235P3	CAP CER N150 1P5 .25P *	1
C606	A700235P8	CAP CER N150 3P9 .25P *	1
C607	A700235P9	CAP CER N150 4P7 .25P *	1
C608	A700235P12	CAP CER N150 8P2 .25P *	1
C609	A700235P33	CAP CER N150 13P 5% *	1
C610	A700235P12	CAP CER N150 8P2 .25P *	1
C611	2113740A15	CAP CER NPO 3P3 .25P	1
C612	2113740A19	CAP CER NPO 4P7 .25P	1
C613	J707444P6	CAP TA SOL 4U7 35V	1
C614	2113740A13	CAP CER NPO 2P7 .25P	1
C615	2113740A71	CAP CER NPO 470P 5%	1
C616	2113741M13	CAP CER CL2 470P 10%	1
C617	2113740A15	CAP CER NPO 3P3 .25P	1
C618	2113740A19	CAP CER NPO 4P7 .25P	1
C619	2113741M13	CAP CER CL2 470P 10%	1
C620	2113740A03	CAP CER NPO 1P0 .25P	1
C621	2113741M13	CAP CER CL2 470P 10%	1
C622	2113741M13	CAP CER CL2 470P 10%	1
C623	2113741M13	CAP CER CL2 470P 10%	1
C624	2113740A59	CAP CER NPO 150P 5%	1
C625	2113740A37	CAP CER NPO 22P 5%	1
C626	2113741M21	CAP CER CL2 1N0 10%	1
C627	2113741M45	CAP CER CL2 10N 10%	1
C628	2113740C21	CAP CER NPO 1N5 5%	1
C629	2113740A59	CAP CER NPO 150P 5%	1
C630	2113741C17	CAP CER CL2 100N 5%	1
C632	2113741C17	CAP CER CL2 100N 5%	1
C633	J707444P17	CAP TA SOL 47U 10V	1
C634	2113741C17	CAP CER CL2 100N 5%	1
C635	2113741M13	CAP CER CL2 470P 10%	1
C636	J707444P17	CAP TA SOL 47U 10V	1
C637	2113741C17	CAP CER CL2 100N 5%	1
C639	2113741A33	CAP CER CL2 3N3 5%	1
C640	J707412P9	CAP PYES 100N 10%	1
C641	J707412P13	CAP PYES 470N 10%	1
C642	J707412P13	CAP PYES 470N 10%	1
C643	2113741C09	CAP CER CL2 47N 5%	1
C644	2113740A13	CAP CER NPO 2P7 .25P	1
C645	2113740A63	CAP CER NPO 220P 5%	1
C647	2113740A29	CAP CER NPO 10P 5%	1
C648	2113740A63	CAP CER NPO 220P 5%	1
C653	J707444P6	CAP TA SOL 4U7 35V	1
C656	2113740A71	CAP CER NPO 470P 5%	1
C657	2113741M13	CAP CER CL2 470P 10%	1
C658	2113741M45	CAP CER CL2 10N 10%	1
C659	2113741M21	CAP CER CL2 1N0 10%	1
C660	2113741M13	CAP CER CL2 470P 10%	1
C661	2113741M13	CAP CER CL2 470P 10%	1
C662	2113741M13	CAP CER CL2 470P 10%	1
C663	2113741M13	CAP CER CL2 470P 10%	1
C664	2113741C17	CAP CER CL2 100N 5%	1
C665	2113741M13	CAP CER CL2 470P 10%	1
C666	2113741M13	CAP CER CL2 470P 10%	1
C667	2113741M13	CAP CER CL2 470P 10%	1
C668	2113741A41	CAP CER CL2 6N8 5%	1
C669	2113740A55	CAP CER NPO 100P 5%	1
C670	2113740A31	CAP CER NPO 12P 5%	1
C671	2113741C17	CAP CER CL2 100N 5%	1
C680	J708538P5	RES VAR CERM 10K 20% G5	1
D100	J706892P2	DIO SI PIN UM 9678	1
D101	A700047P3	DIO SI SIG 1N6263	1
D102	J707390P1	DIO SI SIG BAV 74	1
D301	J706892P2	DIO SI PIN UM 9678	1
D302	J706007P1	DIO SI CAP BB 505B	1
D303	J706007P1	DIO SI CAP BB 505B	1
D304	A700047P3	DIO SI SIG 1N6263	1
D305	J706007P1	DIO SI CAP BB 505B	1
D306	J706007P1	DIO SI CAP BB 505B	1
D307	J706007P1	DIO SI CAP BB 505B	1
D308	J706007P1	DIO SI CAP BB 505B	1
D309	J706007P1	DIO SI CAP BB 505B	1
D310	J706007P1	DIO SI CAP BB 505B	1
D311	J706007P1	DIO SI CAP BB 505B	1
D401	A700025P8	DIO SI ZENR 6V8 5% 0.4W	1
D501	J706007P1	DIO SI CAP BB 505B	1
D502	J706007P1	DIO SI CAP BB 505B	1
D503	J706007P1	DIO SI CAP BB 505B	1
D504	J706007P1	DIO SI CAP BB 505B	1
D505	J707769P2	DIO SI CAP BBY 31 *	1
D506	J707390P1	DIO SI SIG BAV 74	1
D507	J707769P1	DIO SI CAP BBY 31	1
D508	J707769P1	DIO SI CAP BBY 31	1
D601	J706007P1	DIO SI CAP BB 505B	1
D602	J706007P1	DIO SI CAP BB 505B	1
D603	J706007P1	DIO SI CAP BB 505B	1
D604	J706007P1	DIO SI CAP BB 505B	1
D605	J707390P1	DIO SI SIG BAV 74	1
D606	J708681P1	DIO SI SIG BAW 56	1
D607	J707390P1	DIO SI SIG BAV 74	1
D608	J707390P1	DIO SI SIG BAV 74	1
D610	J708681P1	DIO SI SIG BAW 56	1
D611	J707389P1	DIO SI SIG BAV 99	1
L100	K805653G2	COIL ASM 2 1/2T	1
L101	A700024P1	COIL RF FIX 0.1UH 10%	1
L102	K805653G2	COIL ASM 2 1/2T	1
L103	J707256P2	COIL FIX	1
L104	K805653G2	COIL ASM 2 1/2T	1
L105	J707256P2	COIL FIX	1
L106	K805653G1	COIL ASM 1 1/2T	1
L107	A701237P1	COIL	1
L108	J707339G1	COIL FIX ASM	1
L109	A700024P1	COIL RF FIX 0.1UH 10% G1,G2,G3	1
L110	J707339G1	COIL FIX ASM G1,G2,G3	1
L111	A701237P1	COIL G1,G2,G3	1
L112	J709287P1	CORE TOR FERR G1,G2,G3	1
L113	A700024P1	COIL RF FIX 0.1UH 10%	1
L114	J707339G1	COIL FIX ASM	1

PARTS LIST FOR RADIO FREQUENCY BOARD RF666X : M905779GX BD REV. 3/K

Pos	Code No.	Description	Qt
L115	A701237P1	COIL G1,G2,G3	1
L115	J707256P3	COIL FIX G4,G5,G6	1
L116	J708561P4	COIL FIXED	1
L117	A700024P3	COIL RF FIX 0.15UH 10%	1
L118	J709603P1	COIL	1
L119	J709603P1	COIL	1
L120	J709603P1	COIL	1
L121	A700024P25	COIL RF FIX 10UH 10%	1
L122	A700024P25	COIL RF FIX 10UH 10%	1
L123	J709287P1	CORE TOR FERR	1
L301	J707256P2	COIL FIX	1
L302	J707256P2	COIL FIX	1
L303	K805627G1	COIL RF FIXED 1 1/2T	1
L304	K805627G1	COIL RF FIXED 1 1/2T	1
L305	J707486P11	COIL RF FIX 2.2UH 10%	1
L306	K805627G1	COIL RF FIXED 1 1/2T	1
L307	K805627G1	COIL RF FIXED 1 1/2T	1
L308	K805627G1	COIL RF FIXED 1 1/2T	1
L309	K805627G1	COIL RF FIXED 1 1/2T	1
L311	K805627G1	COIL RF FIXED 1 1/2T	1
L312	J708428P2	COIL RF VAR 45 MHZ	1
L401	J707486P10	COIL RF FIX 1.5UH 10%	1
L403	K805570G2	COIL ASM	1
L404	K805570G1	COIL ASM	1
L405	J708428P1	COIL RF VAR 45 MHZ	1
L406	K805570G3	COIL ASM	1
L407	A700024P25	COIL RF FIX 10UH 10%	1
L408	J708428P2	COIL RF VAR 45 MHZ	1
L409	J707431P1	COIL RF VAR 455KHZ 25%	1
L410	J707431P1	COIL RF VAR 455KHZ 25%	1
L501	A700024P13	COIL RF FIX 1.0UH 10%	1
L502	A700024P13	COIL RF FIX 1.0UH 10%	1
L503	A700024P13	COIL RF FIX 1.0UH 10%	1
L504	A700024P13	COIL RF FIX 1.0UH 10%	1
L505	L855671P1	COIL RADIO FREQUENCY	1
L506	A700024P13	COIL RF FIX 1.0UH 10%	1
L507	A700024P13	COIL RF FIX 1.0UH 10%	1
L508	A700024P1	COIL RF FIX 0.1UH 10%	1
L509	K805527G1	COIL ASM	1
L510	J707256P3	COIL FIX	1
L511	J707256P3	COIL FIX	1
L512	K805653G1	COIL ASM 1 1/2T	1
L513	K805653G3	COIL ASM 3 1/2T	1
L601	A700024P13	COIL RF FIX 1.0UH 10%	1
L602	A700024P13	COIL RF FIX 1.0UH 10%	1
L603	A700024P13	COIL RF FIX 1.0UH 10%	1
L604	A700024P13	COIL RF FIX 1.0UH 10%	1
L605	L855671P1	COIL RADIO FREQUENCY	1
L606	A700024P13	COIL RF FIX 1.0UH 10%	1
L607	A700024P13	COIL RF FIX 1.0UH 10%	1
L608	A700024P1	COIL RF FIX 0.1UH 10%	1
L609	K805653G6	COIL ASM 6 1/2T	1
L610	A700024P29	COIL RF FIX 22UH 10%	1
P102	J707064P112	CONN PWB FEM 12-CKT	1
P105	A701883P4	CONN PWB FEM RECP	1
Q100	J707388P1	TSTR NPN SI BFR 53	1
Q101	J707388P1	TSTR NPN SI BFR 53	1
Q102	A701940P1	TSTR NPN SI RF-PWR 0.4W	1
Q103	A700066P2	TSTR NPN SI RF-PWR 2.0W	1
Q104	J708167P2	TSTR NPN SI RF-PWR 23W G1,G2,G3	1
Q105	J708556P1	TSTR NPN SI RF-PWR 28W G1,G2,G3	1
Q105	J708167P2	TSTR NPN SI RF-PWR 23W G4,G5,G6	1
Q106	J707432P1	TSTR PNP SI BCX 18	1
Q107	J707386P1	TSTR NPN SI BCW 32	1
Q108	J708406P1	TSTR NPN SI BD 233	1
Q201	J707435P1	TSTR PNP SI BC 369	1
Q202	J707386P1	TSTR NPN SI BCW 32	1
Q203	J707432P1	TSTR PNP SI BCX 18	1
Q204	J707386P1	TSTR NPN SI BCW 32	1
Q301	J706011P2	TSTR NPN SI BFR 91A	1
Q302	J708315P1	TSTR JFET SI 2N5245	1
Q401	J707817P1	TSTR JFET SI J 309	1
Q402	J707817P1	TSTR JFET SI J 309	1
Q403	J707419P1	TSTR JFET SI BF511	1
Q404	J708418P1	TSTR NPN SI BFS 20	1
Q405	J708418P1	TSTR NPN SI BFS 20	1
Q406	J708418P1	TSTR NPN SI BFS 20	1
Q407	J707386P1	TSTR NPN SI BCW 32	1
Q408	J707387P1	TSTR PNP SI BCW 30	1
Q501	J707817P1	TSTR JFET SI J 309	1
Q502	J707388P1	TSTR NPN SI BFR 53	1
Q503	J707388P1	TSTR NPN SI BFR 53	1
Q504	J708318P1	TSTR PNP SI BFT 92	1
Q601	J707817P1	TSTR JFET SI J 309	1
Q602	J707388P1	TSTR NPN SI BFR 53	1
Q603	J707388P1	TSTR NPN SI BFR 53	1
Q604	J708318P1	TSTR PNP SI BFT 92	1
Q605	J707386P1	TSTR NPN SI BCW 32	1
Q606	J707386P1	TSTR NPN SI BCW 32	1
Q607	J707386P1	TSTR NPN SI BCW 32	1
Q608	J707433P1	TSTR MFET SI BF 989	1
Q609	J707419P1	TSTR JFET SI BF511	1
R100	J707385P152	RES MFLM 1/8W 1K5 5%	1
R101	J707385P562	RES MFLM 1/8W 5K6 5%	1
R102	J707385P470	RES MFLM 1/8W 47R 5%	1
R103	J707385P152	RES MFLM 1/8W 1K5 5%	1
R104	J707385P562	RES MFLM 1/8W 5K6 5%	1
R105	J707385P270	RES MFLM 1/8W 27R 5%	1
R106	J707385P270	RES MFLM 1/8W 27R 5%	1
R107	J707385P102	RES MFLM 1/8W 1KO 5%	1
R108	J707385P100	RES MFLM 1/8W 10R 5%	1
R109	J707385P100	RES MFLM 1/8W 10R 5%	1
R110	J707385P947	RES MFLM 1/8W 4R7 20%	1
R111	J707385P102	RES MFLM 1/8W 1KO 5%	1
R112	J707385P270	RES MFLM 1/8W 27R 5%	1
R113	J707385P100	RES MFLM 1/8W 10R 5% G1,G2,G3	1
R114	J707385P100	RES MFLM 1/8W 10R 5% G1,G2,G3	1
R115	J707385P100	RES MFLM 1/8W 10R 5%	1
R116	J707385P100	RES MFLM 1/8W 10R 5%	1
R117	J707385P100	RES MFLM 1/8W 10R 5%	1
R119	J707385P473	RES MFLM 1/8W 47K 5%	1
R120	J707385P473	RES MFLM 1/8W 47K 5%	1

Pos	Code No.	Description			Qt
R121	J707385P102	RES MFLM 1/8W 1K0 G4,G5,G6	5%		1
R121	J707385P221	RES MFLM 1/8W 220R G1,G2,G3	5%		1
R122	J707385P102	RES MFLM 1/8W 1K0 G4,G5,G6	5%		1
R122	J707385P221	RES MFLM 1/8W 220R G1,G2,G3	5%		1
R123	J707385P220	RES MFLM 1/8W 22R	5%		1
R124	J707385P220	RES MFLM 1/8W 22R	5%		1
R125	J707385P391	RES MFLM 1/8W 390R G1,G2,G3	5%		1
R126	J707385P391	RES MFLM 1/8W 390R G1,G2,G3	5%		1
R127	J707385P101	RES MFLM 1/8W 100R G1,G2,G3	5%		1
R130	J707385P103	RES MFLM 1/8W 10K	5%		1
R131	J707385P472	RES MFLM 1/8W 4K7 G1,G2,G3	5%		1
R131	J707385P473	RES MFLM 1/8W 47K G4,G5,G6	5%	✱	1
R132	J708538P9	RES VAR CERM 200K	20%		1
R133	J708538P4	RES VAR CERM 5K0	20%		1
R134	J707385P100	RES MFLM 1/8W 10R	5%		1
R135	J706147P2	RES THERM PTC 80R G1,G2,G3	25%		1
R136	J707385P101	RES MFLM 1/8W 100R G4,G5,G6	5%		1
R136	J707385P153	RES MFLM 1/8W 15K G1,G2,G3	5%		1
R137	J707385P473	RES MFLM 1/8W 47K	5%		1
R138	J707385P333	RES MFLM 1/8W 33K	5%		1
R139	J707385P333	RES MFLM 1/8W 33K	5%		1
R140	J707385P104	RES MFLM 1/8W 100K	5%		1
R141	J707385P222	RES MFLM 1/8W 2K2	5%		1
R142	J707385P222	RES MFLM 1/8W 2K2	5%		1
R143	J707385P104	RES MFLM 1/8W 100K	5%		1
R144	J707385P682	RES MFLM 1/8W 6K8	5%		1
R145	J707385P154	RES MFLM 1/8W 150K	5%	✱	1
R146	J707385P472	RES MFLM 1/8W 4K7	5%		1
R147	J707385P123	RES MFLM 1/8W 12K	5%		1
R148	J707385P331	RES MFLM 1/8W 330R	5%		1
R149	J707385P683	RES MFLM 1/8W 68K	5%		1
R150	J707385P104	RES MFLM 1/8W 100K	5%		1
R151	J707385P274	RES MFLM 1/8W 270K	5%		1
R152	J707385P562	RES MFLM 1/8W 5K6	5%		1
R153	J707385P222	RES MFLM 1/8W 2K2	5%		1
R154	J707385P102	RES MFLM 1/8W 1K0	5%		1
R155	J707385P472	RES MFLM 1/8W 4K7	5%		1
R156	J707385P223	RES MFLM 1/8W 22K	5%	✱	1
R157	J709725P1	RES THERM PTC 1K0		✱	1
R158	J707385P472	RES MFLM 1/8W 4K7	5%	✱	1
R167	2113740A55	CAP CER NPO 100P	5%	G2	1
R201	J707385P561	RES MFLM 1/8W 560R	5%		1
R202	J707385P271	RES MFLM 1/8W 270R	5%		1
R203	J707385P153	RES MFLM 1/8W 15K	5%		1
R204	J707385P153	RES MFLM 1/8W 15K	5%		1
R205	J707385P472	RES MFLM 1/8W 4K7	5%		1
R206	J707385P272	RES MFLM 1/8W 2K7	5%		1

Pos	Code No.	Description		Qt
R207	J707385P563	RES MFLM 1/8W 56K	5%	1
R208	J707385P563	RES MFLM 1/8W 56K	5%	1
R209	J707385P271	RES MFLM 1/8W 270R	5%	1
R301	J707385P473	RES MFLM 1/8W 47K	5%	1
R302	J707385P221	RES MFLM 1/8W 220R	5%	1
R303	J707385P104	RES MFLM 1/8W 100K	5%	1
R304	J707385P104	RES MFLM 1/8W 100K	5%	1
R306	J707385P222	RES MFLM 1/8W 2K2	5%	1
R307	J707385P681	RES MFLM 1/8W 680R	5%	1
R308	J707385P560	RES MFLM 1/8W 56R	5%	1
R309	J707385P270	RES MFLM 1/8W 27R	5%	1
R310	J707385P104	RES MFLM 1/8W 100K	5%	1
R311	J707385P270	RES MFLM 1/8W 27R	5%	1
R312	J707385P104	RES MFLM 1/8W 100K	5%	1
R313	J707385P104	RES MFLM 1/8W 100K	5%	1
R314	J707385P104	RES MFLM 1/8W 100K	5%	1
R315	J707385P104	RES MFLM 1/8W 100K	5%	1
R316	J707385P104	RES MFLM 1/8W 100K	5%	1
R317	J707385P272	RES MFLM 1/8W 2K7	5%	1
R318	J707385P100	RES MFLM 1/8W 10R	5%	1
R319	J707385P101	RES MFLM 1/8W 100R	5%	1
R320	J707385P103	RES MFLM 1/8W 10K	5%	1
R321	J707385P270	RES MFLM 1/8W 27R	5%	1
R322	J707385P104	RES MFLM 1/8W 100K	5%	1
R323	J707385P102	RES MFLM 1/8W 1K0	5%	1
R324	J707385P101	RES MFLM 1/8W 100R	5%	1
R401	J707385P560	RES MFLM 1/8W 56R	5%	1
R402	J707385P100	RES MFLM 1/8W 10R	5%	1
R403	J707385P332	RES MFLM 1/8W 3K3	5%	1
R405	J707385P100	RES MFLM 1/8W 10R	5%	1
R406	J707385P820	RES MFLM 1/8W 82R	5%	1
R407	J707385P470	RES MFLM 1/8W 47R	5%	1
R408	J707385P470	RES MFLM 1/8W 47R	5%	1
R410	J707385P272	RES MFLM 1/8W 2K7	5%	1
R411	J707385P682	RES MFLM 1/8W 6K8	5%	1
R412	J707385P272	RES MFLM 1/8W 2K7	5%	1
R413	J707385P471	RES MFLM 1/8W 470R	5%	1
R414	J707385P220	RES MFLM 1/8W 22R	5%	1
R415	J707385P222	RES MFLM 1/8W 2K2	5%	1
R416	J707385P562	RES MFLM 1/8W 5K6	5%	1
R417	J707385P103	RES MFLM 1/8W 10K	5%	1
R418	J707385P153	RES MFLM 1/8W 15K	5%	1
R419	J707385P182	RES MFLM 1/8W 1K8	5%	1
R420	J707385P182	RES MFLM 1/8W 1K8	5%	1
R421	J707385P182	RES MFLM 1/8W 1K8	5%	1
R422	J707385P473	RES MFLM 1/8W 47K	5%	1
R423	J707385P153	RES MFLM 1/8W 15K	5%	1
R424	J708538P5	RES VAR CERM 10K	20%	1
R425	J707385P272	RES MFLM 1/8W 2K7	5%	1
R426	J707385P333	RES MFLM 1/8W 33K G1,G4	5%	1
R426	J707385P473	RES MFLM 1/8W 47K G2,G3,G5,G6	5%	1
R427	J707385P393	RES MFLM 1/8W 39K G2,G5	5%	1
R427	J707385P473	RES MFLM 1/8W 47K G1,G3,G4,G6	5%	1
R428	J707385P393	RES MFLM 1/8W 39K G1,G4	5%	1

Pos	Code No.	Description	Qt
R428	J707385P563	RES MFLM 1/8W 56K 5% G2,G3,G5,G6	1
R429	J707385P104	RES MFLM 1/8W 100K 5%	1
R430	J707385P334	RES MFLM 1/8W 330K 5%	1
R431	J707385P473	RES MFLM 1/8W 47K 5%	1
R432	J707385P473	RES MFLM 1/8W 47K 5%	1
R433	J707385P271	RES MFLM 1/8W 270R 5%	1
R434	J707385P102	RES MFLM 1/8W 1K0 5%	1
R435	J706147P3	RES THERM PTC 250R 25%	1
R436	J707385P392	RES MFLM 1/8W 3K9 5%	1
R437	J707406P7	RES THERM NTC 220R 10%	1
R438	J707385P222	RES MFLM 1/8W 2K2 5%	1
R439	J707385P392	RES MFLM 1/8W 3K9 5%	1
R440	J707385P392	RES MFLM 1/8W 3K9 5%	1
R441	J707385P101	RES MFLM 1/8W 100R 5%	1
R442	J708538P6	RES VAR CERM 20K 20%	1
R444	J707385P473	RES MFLM 1/8W 47K 5%	1
R445	J707385P273	RES MFLM 1/8W 27K 5%	1
R446	J707385P224	RES MFLM 1/8W 220K 5%	1
R447	J707385P392	RES MFLM 1/8W 3K9 5%	1
R448	J707385P101	RES MFLM 1/8W 100R 5%	1
R449	J707385P470	RES MFLM 1/8W 47R 5%	1
R450	J707385P103	RES MFLM 1/8W 10K 5%	1
R451	J707385P332	RES MFLM 1/8W 3K3 5%	1
R452	J707385P332	RES MFLM 1/8W 3K3 5%	1
R501	J707385P122	RES MFLM 1/8W 1K2 5%	1
R502	J707385P122	RES MFLM 1/8W 1K2 5%	1
R503	J707385P122	RES MFLM 1/8W 1K2 5%	1
R504	J707385P104	RES MFLM 1/8W 100K 5%	1
R505	J707385P104	RES MFLM 1/8W 100K 5%	1
R506	J707385P104	RES MFLM 1/8W 100K 5%	1
R508	J707385P103	RES MFLM 1/8W 10K 5%	1
R509	J707385P100	RES MFLM 1/8W 10R 5%	1
R510	J707385P332	RES MFLM 1/8W 3K3 5%	1
R512	J707385P561	RES MFLM 1/8W 560R 5%	1
R513	J707385P183	RES MFLM 1/8W 18K 5%	1
R514	J707385P472	RES MFLM 1/8W 4K7 5%	1
R515	J707385P271	RES MFLM 1/8W 270R 5%	1
R517	J707385P101	RES MFLM 1/8W 100R 5%	1
R520	J707385P682	RES MFLM 1/8W 6K8 5%	1
R521	J707385P152	RES MFLM 1/8W 1K5 5%	1
R522	J707385P680	RES MFLM 1/8W 68R 5%	1
R523	J707385P222	RES MFLM 1/8W 2K2 5%	1
R524	J707385P472	RES MFLM 1/8W 4K7 5%	1
R525	J707385P680	RES MFLM 1/8W 68R 5%	1
R526	J707385P104	RES MFLM 1/8W 100K 5%	1
R527	J707385P104	RES MFLM 1/8W 100K 5%	1
R528	J707385P103	RES MFLM 1/8W 10K 5%	1
R529	J707385P150	RES MFLM 1/8W 15R 5%	1
R530	J707385P182	RES MFLM 1/8W 1K8 5%	1
R531	J707385P682	RES MFLM 1/8W 6K8 5%	1
R532	J707385P392	RES MFLM 1/8W 3K9 5%	1
R601	J707385P122	RES MFLM 1/8W 1K2 5%	1
R602	J707385P122	RES MFLM 1/8W 1K2 5%	1
R603	J707385P122	RES MFLM 1/8W 1K2 5%	1
R604	J707385P104	RES MFLM 1/8W 100K 5%	1
R605	J707385P104	RES MFLM 1/8W 100K 5%	1
R606	J707385P104	RES MFLM 1/8W 100K 5%	1
R607	J707385P561	RES MFLM 1/8W 560R 5%	1

Pos	Code No.	Description	Qt
R608	J707385P221	RES MFLM 1/8W 220R 5%	1
R609	J707385P472	RES MFLM 1/8W 4K7 5%	1
R610	J707385P183	RES MFLM 1/8W 18K 5%	1
R611	J707385P271	RES MFLM 1/8W 270R 5%	1
R612	J707385P223	RES MFLM 1/8W 22K 5%	1
R613	J707385P101	RES MFLM 1/8W 100R 5%	1
R614	J707385P682	RES MFLM 1/8W 6K8 5%	1
R615	J707385P222	RES MFLM 1/8W 2K2 5%	1
R616	J707385P101	RES MFLM 1/8W 100R 5%	1
R617	J707385P101	RES MFLM 1/8W 100R 5%	1
R618	J707385P102	RES MFLM 1/8W 1K0 5%	1
R619	J707385P102	RES MFLM 1/8W 1K0 5%	1
R620	J707385P272	RES MFLM 1/8W 2K7 5%	1
R621	J707385P330	RES MFLM 1/8W 33R 5%	1
R622	J707385P102	RES MFLM 1/8W 1K0 5%	1
R623	J707385P123	RES MFLM 1/8W 12K 5%	1
R624	J707385P223	RES MFLM 1/8W 22K 5%	1
R625	J707385P470	RES MFLM 1/8W 47R 5%	1
R626	J707385P100	RES MFLM 1/8W 10R 5%	1
R627	J707385P103	RES MFLM 1/8W 10K 5%	1
R628	J707385P224	RES MFLM 1/8W 220K 5%	1
R629	J707385P393	RES MFLM 1/8W 39K 5% G1,G2,G4,G5	1
R629	J707385P823	RES MFLM 1/8W 82K 5% G3,G6	1
R630	J707385P100	RES MFLM 1/8W 10R 5% G1,G4,G5,G6	1
R631	J707385P332	RES MFLM 1/8W 3K3 5% G1,G2,G4,G5	1
R632	J707385P393	RES MFLM 1/8W 39K 5%	1
R633	J707385P223	RES MFLM 1/8W 22K 5%	1
R634	J707385P470	RES MFLM 1/8W 47R 5%	1
R635	J707385P102	RES MFLM 1/8W 1K0 5%	1
R636	J707385P332	RES MFLM 1/8W 3K3 5%	1
R637	J707385P181	RES MFLM 1/8W 180R 5%	1
R638	J707385P154	RES MFLM 1/8W 150K 5% G1,G2,G4,G5	1
R638	J707385P823	RES MFLM 1/8W 82K 5% G3,G6	1
R639	J707385P682	RES MFLM 1/8W 6K8 5% G1,G2,G4,G5	1
R639	J707385P822	RES MFLM 1/8W 8K2 5% G3,G6	1
R640	J707385P105	RES MFLM 1/8W 1M0 10%	1
R641	J707385P184	RES MFLM 1/8W 180K 5%	1
R642	J707385P184	RES MFLM 1/8W 180K 5%	1
R643	J707385P105	RES MFLM 1/8W 1M0 10%	1
R644	J707385P224	RES MFLM 1/8W 220K 5%	1
R645	J707385P103	RES MFLM 1/8W 10K 5%	1
R646	J707385P472	RES MFLM 1/8W 4K7 5%	1
R647	J707385P333	RES MFLM 1/8W 33K 5%	1
R648	J707385P683	RES MFLM 1/8W 68K 5%	1
R649	J707385P104	RES MFLM 1/8W 100K 5%	1
R650	J707385P223	RES MFLM 1/8W 22K 5%	1
R651	J707385P104	RES MFLM 1/8W 100K 5%	1
R652	J707385P472	RES MFLM 1/8W 4K7 5%	1
R653	J707385P333	RES MFLM 1/8W 33K 5%	1
R654	J707385P562	RES MFLM 1/8W 5K6 5%	1
R655	J707385P183	RES MFLM 1/8W 18K 5%	1

PARTS LIST FOR RADIO FREQUENCY BOARD RF666X : M905779GX BD REV. 3/K

Pos	Code No.	Description	Qt
R656	J707385P393	RES MFLM 1/8W 39K 5%	1
R657	J707385P823	RES MFLM 1/8W 82K 5%	1
R658	J707385P154	RES MFLM 1/8W 150K 5%	1
R659	J707385P102	RES MFLM 1/8W 1K0 5%	1
R660	J707385P333	RES MFLM 1/8W 33K 5%	1
R661	J707385P473	RES MFLM 1/8W 47K 5%	1
R662	J707385P393	RES MFLM 1/8W 39K 5%	1
R663	J708538P5	RES VAR CERM 10K 20%	1
R664	J707385P333	RES MFLM 1/8W 33K 5%	1
R665	J707385P824	RES MFLM 1/8W 820K 5%	1
R666	J707385P124	RES MFLM 1/8W 120K 5%	1
R667	J707385P124	RES MFLM 1/8W 120K 5%	1
R668	J707385P122	RES MFLM 1/8W 1K2 5%	1
R669	J707385P221	RES MFLM 1/8W 220R 5%	1
R670	J707385P103	RES MFLM 1/8W 10K 5%	1
R671	J707385P562	RES MFLM 1/8W 5K6 5%	1
R672	J707385P822	RES MFLM 1/8W 8K2 5%	1
R673	J707385P822	RES MFLM 1/8W 8K2 5%	1
R674	J707385P101	RES MFLM 1/8W 100R 5%	1
R675	J708538P5	RES VAR CERM 10K 20%	1
R676	J707385P123	RES MFLM 1/8W 12K 5%	1
R677	J708538P5	RES VAR CERM 10K 20%	1
R678	J707385P821	RES MFLM 1/8W 820R 5%	1
R679	J707385P683	RES MFLM 1/8W 68K 5%	1
R680	J708538P6	RES VAR CERM 20K 20%	1
R681	J707385P683	RES MFLM 1/8W 68K 5%	1
R682	J707385P331	RES MFLM 1/8W 330R 5%	1
R683	J707385P681	RES MFLM 1/8W 680R 5%	1
R684	J707385P105	RES MFLM 1/8W 1M0 10%	1
R685	J707385P183	RES MFLM 1/8W 18K 5%	1
R686	J707385P103	RES MFLM 1/8W 10K 5%	1
R687	J707385P183	RES MFLM 1/8W 18K 5%	1
R688	J707385P103	RES MFLM 1/8W 10K 5%	1
R689	J707385P124	RES MFLM 1/8W 120K 5%	1
R690	J707385P152	RES MFLM 1/8W 1K5 5%	1
R691	J707385P223	RES MFLM 1/8W 22K 5%	1
R692	J707385P105	RES MFLM 1/8W 1M0 10%	1
R693	J707385P223	RES MFLM 1/8W 22K 5%	1
R694	J707385P223	RES MFLM 1/8W 22K 5%	1
R695	J707385P105	RES MFLM 1/8W 1M0 10%	1
R696	J707385P223	RES MFLM 1/8W 22K 5%	1
R697	J707385P223	RES MFLM 1/8W 22K 5%	1
R698	J707385P105	RES MFLM 1/8W 1M0 10%	1
R699	J707385P273	RES MFLM 1/8W 27K 5%	1
R700	J707385P103	RES MFLM 1/8W 10K 5%	1
R701	J707385P824	RES MFLM 1/8W 820K 5%	1
R702	J707385P824	RES MFLM 1/8W 820K 5%	1
R703	J707385P154	RES MFLM 1/8W 150K 5%	1
R704	J707385P561	RES MFLM 1/8W 560R 5%	1
R705	J707385P122	RES MFLM 1/8W 1K2 5%	1
R706	J707385P561	RES MFLM 1/8W 560R 5%	1
U100	J708165P2	IC LIN OP-AMP 324	1
U201	J708333P1	IC LIN VR FIX 4785	1
U401	J707449P1	IC LIN IF-AMP 3357	1
U402	M905766G1	INT CKT SQ 4002 G1,G4	1
U402	M905766G2	INT CKT SQ 4003 G3,G6	1
U402	M905766G3	INT CKT SQ 4004 G2,G5	1
U601	J707859P1	IC LIN OP-AMP 204	1
U602	J707859P1	IC LIN OP-AMP 204	1

Pos	Code No.	Description	Qt
U603	J707859P1	IC LIN OP-AMP 204	1
U604	J707859P1	IC LIN OP-AMP 204	1
U606	J707243P1	IC DIG REG 4094	1
U607	J707374P3	IC PLL PRESC 12017 G1,G2,G4,G4	1
U607	J707374P4	IC PLL PRESC 12018 G3,G6	1
U608	B800902P1	IC PLL SYN CUSTOM DES	1
U609	J707859P1	IC LIN OP-AMP 204	1
U610	J708503P2	IC LIN CMPAR LM 339	1
U615	J708621P2	CPLR OPTO PC 827	1
U616	J708503P2	IC LIN CMPAR LM 339	1
W001	J706451P1	WIRE STRAP G5	1
W004	J706451P1	WIRE STRAP ✱	1
W1	A700184P1	RES WIRE JMPR OR JUMPER	1
W3	J707256P1	COIL FIX	1
W5	J708717P1	STRAP	1
Y401	J708426P1	CRYSTAL UNIT 44.5450MHZ	1
Z401	J708330P1	FLTR CRY 45.0 +/-7.5KHZ G1,G4	1
Z401	J708330P2	FLTR CRY 45.0 +/-6KHZ G2,G5	1
Z401	J708330P3	FLTR CRY 45.0 +/-3.75KHZ G3,G6	1
Z402	J707446P1	FLTR CER 455K +/-10KHZ G1,G4	1
Z402	J707446P3	FLTR CER 455K +/- 7.5KHZ G2,G5	1
Z402	J707446P4	FLTR CER 455K +/- 4.5KHZ G3,G6	1
Z403	J707446P1	FLTR CER 455K +/-10KHZ G1,G4	1
Z403	J707446P3	FLTR CER 455K +/- 7.5KHZ G2,G5	1
Z403	J707446P4	FLTR CER 455K +/- 4.5KHZ G3,G6	1
	M905780P1R3	BD PW SMD DS G1,G2,G3	1
	M905780P2R3	BD PW SMD DS G4,G5,G6	1
		NON REFERENCED ITEMS:	
	J706804P2	WASH INS CRYS FOR HC-18/U ✱	1
	J706804P3	WASH INS CRYS FOR HC-45/U ✱	2
	J708561P3	COIL FIXED	2
	J708966G1	HEAT SINK MODF	1
	K805569G1	SHIELD METALLIZED	1
	J709006P1	SPACER SELF CLINCHING G4,G5,G6	2

PARTS LIST FOR RADIO FREQUENCY BOARD RF666X : M905779GX BD. REV. 0/I

Pos	Code No.	Description	Qt
		COMPONENTS REVISED SINCE LAST EDITION ARE MARKED *	
	M905779G1	RF6662S25 CH. SPAC. 25kHZ/25W OUT	
	M905779G2	RF6663S25 CH. SPAC. 20kHZ/25W OUT	
	M905779G3	RF6664S25 CH. SPAC. 12.5kHZ/25W OUT	
	M905779G4	RF6662S6 CH. SPAC. 25kHZ/6W OUT	
	M905779G5	RF6662S6 CH. SPAC. 20kHZ/6W OUT	
	M905779G6	RF6662S6 CH. SPAC. 12.5kHZ/6W OUT	
C100	21R13740A29	CAP CER NP0 10P 5%	1
C101	21R13740A33	CAP CER NP0 15P 5%	1
C102	21R13741M45	CAP CER CL2 10N 10%	1
C103	21R13740A17	CAP CER NP0 3P9 .25P	1
C104	21R13740A17	CAP CER NP0 3P9 .25P	1
C105	21R13740A39	CAP CER NP0 27P 5%	1
C107	21R13740A55	CAP CER NP0 100P 5%	1
C108	21R13740A33	CAP CER NP0 15P 5%	1
C109	21R13740A39	CAP CER NP0 27P 5%	1
C110	21R13740A43	CAP CER NP0 39P 5%	1
C111	21R13741M45	CAP CER CL2 10N 10%	1
C112	21R13740A55	CAP CER NP0 100P 5%	1
C113	21R13740A39	CAP CER NP0 27P 5%	1
C114	J707809P13	CAP CER NP0 10P 5%	1
C115	J707809P18	CAP CER NP0 27P 5%	1
C116	J707809P20	CAP CER NP0 39P 5%	1
C117	J707809P25	CAP CER NP0 100P 5%	1
C118	21R13741A33	CAP CER CL2 3N3 10%	1
C119	J707809P25	CAP CER NP0 100P 5% G1/G2/G3	1
C120	J707809P21	CAP CER NP0 47P 5%	1
C121	A700006P19	CAP MICA 27P 5% G1/G2/G3	1
C122	A700006P19	CAP MICA 27P 5% G1/G2/G3	1
C123	J707809P25	CAP CER NP0 100P 5% G1/G2/G3	1
C124	21R13741M45	CAP CER CL2 10N 10% G1/G2/G3	1
C126	A700006P11	CAP MICA 15P 5% G1/G2/G3	1
C127	A700006P11	CAP MICA 15P 5% G1/G2/G3	1
C128	J707809P14	CAP CER NP0 12P 5% G1/G2/G3	1
C128	J707809P13	CAP CER NP0 10P 5% G4/G5/G6	1
C129	J707809P14	CAP CER NP0 12P 5% G1/G2/G3	1
C129	J707809P13	CAP CER NP0 10P 5% G4/G5/G6	1
C130	A700006P19	CAP MICA 27P 5%	1
C131	A700006P19	CAP MICA 27P 5%	1
C132	J707809P27	CAP CER NP0 150P 5%	1
C133	21R13741M45	CAP CER CL2 10N 10%	1
C134	A700006P26	CAP MICA 47P 5% G1/G2/G3	1
C134	A700006P28	CAP MICA 56P 5% G4/G5/G6	1
C135	A700006P26	CAP MICA 47P 5% G1/G2/G3	1
C135	A700006P28	CAP MICA 56P 5% G4/G5/G6	1
C136	A700006P14	CAP MICA 18P 5%	1
C137	J707353P6	CAP ELECT 4U7 25V	1
C138	21R13741C09	CAP CER CL2 47N 10%	1
C139	J707809P25	CAP CER NP0 100P 5%	1
C140	J707809P25	CAP CER NP0 100P 5%	1
C141	J707809P25	CAP CER NP0 100P 5%	1
C142	J707809P25	CAP CER NP0 100P 5%	1
C143	J707809P25	CAP CER NP0 100P 5%	1
C144	J707809P25	CAP CER NP0 100P 5%	1
C145	J707809P25	CAP CER NP0 100P 5%	1
C146	A700006P4	CAP PTFE 8P2 10%	1
C147	A700006P11	CAP MICA 15P 5%	1
C148	A700006P11	CAP MICA 15P 5%	1
C149	A700006P3	CAP PTFE 6P8 10%	1
C150	J707809P8	CAP CER NP0 3P9 .25P	1
C151	21R13741A33	CAP CER CL2 3N3 10%	1
C152	21R13740A55	CAP CER NP0 100P 5%	1
C153	J707809P1	CAP CER NP0 1P0 .25P	1
C154	J707809P1	CAP CER NP0 1P0 .25P	1
C155	J707809P25	CAP CER NP0 100P 5%	1
C160	21R13740A55	CAP CER NP0 100P 5%	1
C161	21R13740A55	CAP CER NP0 100P 5%	1
C162	J707353P3	CAP ELECT 0U47 50V	1
C163	21R13740A55	CAP CER NP0 100P 5%	1
C164	21R13741C05	CAP CER CL2 33N 10%	1
C165	21R13741M45	CAP CER CL2 10N 10%	1
C166	21R13740A55	CAP CER NP0 100P 5%	1
C167	21R13740A55	CAP CER NP0 100P 5%	1
C168	21R13741M45	CAP CER CL2 10N 10%	1
C169	21R13741C17	CAP CER CL2 100N 10%	1
C170	21R13740A55	CAP CER NP0 100P 5%	1
C171	21R13740A55	CAP CER NP0 100P 5%	1
C201	21R13741C17	CAP CER CL2 100N 10%	1
C202	J707444P8	CAP TA SOL 22U 16V	1
C203	J707444P6	CAP TA SOL 4U7 35V	1
C204	21R13741M13	CAP CER CL2 470P 10%	1
C205	J706024P7	CAP ELECT 330U 25 G3/G6	1
C301	J707809P25	CAP CER NP0 100P 5%	1
C302	J707809P15	CAP CER NP0 15P 5%	1
C303	J707809P15	CAP CER NP0 15P 5%	1
C304	J708287P1	CAP VAR CER 3.3/7.2 PF	1
C305	21R13740A21	CAP CER NP0 5P6 .25P	1
C306	J707483P6	CAP PHEN 0P82 5%	1
C307	21R13740A55	CAP CER NP0 100P 5%	1
C308	21R13740A24	CAP CER NP0 6P8 .25P	1
C309	J708287P1	CAP VAR CER 3.3/7.2 PF	1
C310	21R13741M13	CAP CER CL2 470P 10%	1

Pos	Code No.	Description	Qt
C311	21R13740A41	CAP CER NPO 33P 5%	1
C312	21R13740A63	CAP CER NPO 220P 5%	1
C313	21R13741M13	CAP CER CL2 470P 10%	1
C314	21R13740A11	CAP CER NPO 2P2 .25P	1
C315	21R13740A27	CAP CER NPO 8P2 .25P	1
C316	J708287P1	CAP VAR CER 3.3/7.2PF	1
C317	J707444P2	CAP TA SOL 0U22 35V	1
C318	21R13741M13	CAP CER CL2 470P 10%	1
C319	21R13740A24	CAP CER NPO 6P8 .25P	1
C320	21R13741M13	CAP CER CL2 470P 10%	1
C321	J708287P1	CAP VAR CER 3.3/7.2PF	1
C322	J707483P4	CAP PHEN 0P56 5%	1
C323	J707483P4	CAP PHEN 0P56 5%	1
C324	21R13740A24	CAP CER NPO 6P8 .25P	1
C325	21R13741M13	CAP CER CL2 470P 10%	1
C326	J708287P1	CAP VAR CER 3.3/7.2PF	1
C327	21R13740A24	CAP CER NPO 6P8 .25P	1
C328	J707483P1	CAP PHEN 0P47 5%	1
C329	21R13740A21	CAP CER NPO 5P6 .25P	1
C330	J708287P1	CAP VAR CER 3.3/7.2PF	1
C331	21R13740A11	CAP CER NPO 2P7 .25P	1
C332	J708287P1	CAP VAR CER 3.3/7.2PF	1
C333	21R13740A27	CAP CER NPO 8P2 .25P	1
C334	J707483P2	CAP PHEN 0P33 5%	1
C335	21R13741M13	CAP CER CL2 470P 10%	1
C336	J708287P1	CAP VAR CER 3.3/7.2PF	1
C337	21R13740A27	CAP CER NPO 8P2 .25P	1
C338	21R13740A24	CAP CER NPO 6P8 .25P	1
C339	21R13741M45	CAP CER CL2 10N 10%	1
C340	21R13741M45	CAP CER CL2 10N 10%	1
C341	21R13741M13	CAP CER CL2 470P 10%	1
C342	J708287P1	CAP VAR CER 3.3/7.2PF	1
C343	21R13740A29	CAP CER NPO 10P 5%	1
C344	21R13741M13	CAP CER CL2 470P 10%	1
C345	21R13740A41	CAP CER NPO 33P 5%	1
C347	21R13741M13	CAP CER CL2 470P 10%	1
C348	21R13741M13	CAP CER CL2 470P 10%	1
C349	21R13740A09	CAP CER NPO 1P8 .25P	1
C350	21R13741M13	CAP CER CL2 470P 10%	1
C401	21R13741A33	CAP CER CL2 3N3 10%	1
C402	21R13741A33	CAP CER CL2 3N3 10%	1
C403	21R13741A33	CAP CER CL2 3N3 10%	1
C404	21R13740A19	CAP CER NPO 4P7 .25P	1
C405	21R13741C17	CAP CER CL2 100N 10%	1
C406	21R13740A21	CAP CER NPO 5P6 .25P	1
C407	21R13740A19	CAP CER NPO 4P7 .25P	1
C408	21R13741M21	CAP CER CL2 1N 10%	1
C409	21R13741A33	CAP CER CL2 3N3 10%	1
C410	J707444P8	CAP TA SOL 22U 16V	1
C411	21R13741C17	CAP CER CL2 100N 10%	1
C412	21R13741C17	CAP CER CL2 100N 10%	1
C413	21R13740A33	CAP CER NPO 15P 5%	1
C414	21R13741A33	CAP CER CL2 3N3 10%	1
C415	21R13741A33	CAP CER CL2 3N3 10%	1
C416	J708702P16	CAP CER N750 18P 5%	1
C417	21R13740A49	CAP CER NPO 56P 5%	1
C418	21R13741M45	CAP CER CL2 10N 10%	1
C419	21R13741C17	CAP CER CL2 100N 10%	1
C420	21R13741M45	CAP CER CL2 10N 10%	1

Pos	Code No.	Description	Qt
C421	21R13741C17	CAP CER CL2 100N 10%	1
C422	21R13741C17	CAP CER CL2 100N 10%	1
C423	21R13740A29	CAP CER NPO 10P 5%	1
C424	21R13741A33	CAP CER CL2 3N3 10%	1
C425	J707412P13	CAP PYES 470N 10%	1
C426	21R13740C25	CAP CER NPO 2N2 5%	1
C427	21R13740A67	CAP CER NPO 330P 5%	1
C428	21R13740A65	CAP CER NPO 270P 5% G1/G2/G4/G5	1
C428	21R13740A63	CAP CER NPO 220P 5% G3/G6	1
C429	21R13741M45	CAP CER CL2 10N 10%	1
C430	J707444P8	CAP TA SOL 22U 16V	1
C431	J707444P8	CAP TA SOL 22U 16V	1
C432	21R13741C17	CAP CER CL2 100N 10%	1
C433	21R13741C17	CAP CER CL2 100N 10%	1
C434	21R13741A33	CAP CER CL2 3N3 10%	1
C435	21R13740A03	CAP CER NPO 1P0 .25P	1
C436	21R13741C17	CAP CER CL2 100N 10%	1
C501	J707412P11	CAP PYES 220N 10%	1
C502	J707412P11	CAP PYES 220N 10%	1
C503	J707412P11	CAP PYES 220N 10%	1
C504	A700235P3	CAP CER N150 1P5 .25P	1
C505	A700235P3	CAP CER N150 1P5 .25P	1
C506	A700235P6	CAP CER N150 2P7 .25P	1
C507	A700235P5	CAP CER N150 2P2 .25P	1
C508	A700235P10	CAP CER N150 5P6 .25P	1
C509	A700235P12	CAP CER N150 8P2 .25P	1
C510	A700235P9	CAP CER N150 4P7 .25P	1
C512	J707483P7	CAP PHEN 1P00 5%	1
C513	21R13741M13	CAP CER CL2 470P 10%	1
C515	21R13740A19	CAP CER NPO 4P7 .25P	1
C516	21R13740A15	CAP CER NPO 3P3 .25P	1
C517	J707444P6	CAP TA SOL 4U7 35V	1
C518	21R13740A13	CAP CER NPO 2P7 .25P	1
C519	21R13741M13	CAP CER CL2 470P 10%	1
C520	21R13740A17	CAP CER NPO 3P9 .25P	1
C521	21R13740A19	CAP CER NPO 4P7 .25P	1
C522	21R13741M13	CAP CER CL2 470P 10%	1
C523	21R13740A21	CAP CER NPO 5P6 .25P	1
C525	21R13741M13	CAP CER CL2 470P 10%	1
C526	21R13740A31	CAP CER NPO 12P 5%	1
C527	21R13741M13	CAP CER CL2 470P 10%	1
C528	21R13740A59	CAP CER NPO 150P 5%	1
C529	J708287P1	CAP VAR CER 3.3/7.2PF	1
C530	21R13740A21	CAP CER NPO 5P6 .25P	1
C531	J707483P7	CAP PHEN 1P00 5%	1
C532	21R13740A21	CAP CER NPO 5P6 .25P	1
C533	J708287P1	CAP VAR CER 3.3/7.2PF	1
C534	21R13740A15	CAP CER NPO 3P3 .25P	1
C535	21R13740A15	CAP CER NPO 3P3 .25P	1
C536	21R13741M13	CAP CER CL2 470P 10%	1
C537	21R13741M13	CAP CER CL2 470P 10%	1
C538	21R13741M13	CAP CER CL2 470P 10%	1
C539	21R13741M13	CAP CER CL2 470P 10%	1
C540	21R13741M13	CAP CER CL2 470P 10%	1
C541	21R13741M13	CAP CER CL2 470P 10%	1
C542	21R13741M13	CAP CER CL2 470P 10%	1
C543	21R13741M13	CAP CER CL2 470P 10%	1

Pos	Code No.	Description	Qt
C544	21R13741M13	CAP CER CL2 470P 10%	1
C545	21R13741M13	CAP CER CL2 470P 10%	1
C601	J707412P11	CAP PYES 220N 10%	1
C602	J707412P11	CAP PYES 220N 10%	1
C603	J707412P11	CAP PYES 220N 10%	1
C604	A700235P5	CAP CER N150 2P2 .25P	1
C605	A700235P3	CAP CER N150 1P5 .25P	1
C606	A700235P8	CAP CER N150 3P9 .25P	1
C607	A700235P9	CAP CER N150 4P7 .25P	1
C608	A700235P12	CAP CER N150 8P2 .25P	1
C609	A700235P33	CAP CER N150 13P 5%	1
C610	A700235P12	CAP CER N150 8P2 .25P	1
C611	21R13740A15	CAP CER NPO 3P3 .25P	1
C612	21R13740A19	CAP CER NPO 4P7 .25P	1
C613	J707444P6	CAP TA SOL 4U7 35V	1
C614	21R13740A13	CAP CER NPO 2P7 .25P	1
C615	21R13740A71	CAP CER NPO 470P 5%	1
C616	21R13741M13	CAP CER CL2 470P 10%	1
C617	21R13740A15	CAP CER NPO 3P3 .25P	1
C618	21R13740A19	CAP CER NPO 4P7 .25P	1
C619	21R13741M13	CAP CER CL2 470P 10%	1
C620	21R13740A03	CAP CER NPO 1P0 .25P	1
C621	21R13741M13	CAP CER CL2 470P 10%	1
C622	21R13741M13	CAP CER CL2 470P 10%	1
C623	21R13741M13	CAP CER CL2 470P 10%	1
C624	21R13740A59	CAP CER NPO 150P 5%	1
C625	21R13740A37	CAP CER NPO 22P 5%	1
C626	21R13741M21	CAP CER CL2 1N 10%	1
C627	21R13741M45	CAP CER CL2 10N 10%	1
C628	21R13740C21	CAP CER NPO 1N5 5%	1
C629	21R13740A59	CAP CER NPO 150P 5%	1
C630	21R13741C17	CAP CER CL2 100N 10%	1
C632	21R13741C17	CAP CER CL2 100N 10%	1
C633	J707444P17	CAP TA SOL 47U 10V	1
C634	21R13741C17	CAP CER CL2 100N 10%	1
C635	21R13741M13	CAP CER CL2 470P 10%	1
C636	J707444P17	CAP TA SOL 47U 10V	1
C637	21R13741C17	CAP CER CL2 100N 10%	1
C639	21R13741A33	CAP CER CL2 3N3 10%	1
C640	J707412P9	CAP PYES 100N 10%	1
C641	J707412P13	CAP PYES 470N 10%	1
C642	J707412P13	CAP PYES 470N 10%	1
C643	21R13741C09	CAP CER CL2 47N 10%	1
C644	21R13740A13	CAP CER NPO 2P7 .25P	1
C645	21R13740A63	CAP CER NPO 220P 5%	1
C647	21R13740A29	CAP CER NPO 10P 5%	1
C648	21R13740A63	CAP CER NPO 220P 5%	1
C653	J707444P6	CAP TA SOL 4U7 35V	1
C656	21R13740A71	CAP CER NPO 470P 5%	1
C657	21R13741M13	CAP CER CL2 470P 10%	1
C658	21R13741M45	CAP CER CL2 10N 10%	1
C659	21R13741M21	CAP CER CL2 1N 10%	1
C660	21R13741M13	CAP CER CL2 470P 10%	1
C661	21R13741M13	CAP CER CL2 470P 10%	1
C662	21R13741M13	CAP CER CL2 470P 10%	1
C663	21R13741M13	CAP CER CL2 470P 10%	1
C664	21R13741C17	CAP CER CL2 100N 10%	1
C665	21R13741M13	CAP CER CL2 470P 10%	1
C666	21R13741M13	CAP CER CL2 470P 10%	1
C667	21R13741M13	CAP CER CL2 470P 10%	1
C668	21R13741A41	CAP CER CL2 6N8 5%	1
C669	21R13740A55	CAP CER NPO 100P 5%	1
C670	21R13740A31	CAP CER NPO 12P 5%	1
C671	21R13741C17	CAP CER CL2 100N 10%	1
D100	J706892P2	DIO SI PIN UM 9678	1
D101	A700047P3	DIO SI SIG 1N6263	1
D102	J707390P1	DIO SI SIG BAV 74	1
D301	J706892P2	DIO SI PIN UM 9678	1
D302	J706007P1	DIO SI CAP BB505B	1
D303	J706007P1	DIO SI CAP BB505B	1
D304	A700047P3	DIO SI SIG 1N6263	1
D305	J706007P1	DIO SI CAP BB505B	1
D306	J706007P1	DIO SI CAP BB505B	1
D307	J706007P1	DIO SI CAP BB505B	1
D308	J706007P1	DIO SI CAP BB505B	1
D309	J706007P1	DIO SI CAP BB505B	1
D310	J706007P1	DIO SI CAP BB505B	1
D311	J706007P1	DIO SI CAP BB505B	1
D401	A700025P8	DIO SI ZENR 6V8 5% 0.4W	1
D501	J706007P1	DIO SI CAP BB505B	1
D502	J706007P1	DIO SI CAP BB505B	1
D503	J706007P1	DIO SI CAP BB505B	1
D504	J706007P1	DIO SI CAP BB505B	1
D505	J707769P2	DIO SI CAP BBY 31	1
D506	J707390P1	DIO SI SIG BAV 74	1
D507	J707769P1	DIO SI CAP BBY 31	1
D508	J707769P1	DIO SI CAP BBY 31	1
D601	J706007P1	DIO SI CAP BB505B	1
D602	J706007P1	DIO SI CAP BB505B	1
D603	J706007P1	DIO SI CAP BB505B	1
D604	J706007P1	DIO SI CAP BB505B	1
D605	J707390P1	DIO SI SIG BAV 74	1
D606	J708681P1	DIO SI SIG BAW 56	1
D607	J707390P1	DIO SI SIG BAV 74	1
D608	J707390P1	DIO SI SIG BAV 74	1
D610	J708681P1	DIO SI SIG BAW 56	1
D611	J707389P1	DIO SI SIG BAV 99	1
L100	K805653G2	COIL ASM 2 1/2T	1
L101	A700024P1	COIL RF FIX 0.1UH 10%	1
L102	K805653G2	COIL ASM 2 1/2T	1
L103	J707256P2	COIL FIX	1
L104	K805653G2	COIL ASM 2 1/2T	1
L105	J707256P2	COIL FIX	1
L106	K805653G1	COIL ASM 1 1/2T	1
L107	A701237P1	COIL	1
L108	J707339G1	COIL FIX ASM	1
L109	A700024P1	COIL RF FIX 0.1UH 10% G1/G2/G3	1
L110	J707339G1	COIL FIX ASM G1/G2/G3	1
L111	A701237P1	COIL G1/G2/G3	1
L112	J709287P1	CORE TOR FERR G1/G2/G3	1
L113	A700024P1	COIL RF FIX 0.1UH 10%	1
L114	J707339G1	COIL FIX ASM	1
L115	A701237P1	COIL G1/G2/G3	1

Pos	Code No.	Description	Qt
L115	A701237P3	COIL FIX G4/G5/G6	1
L116	J708561P4	COIL FIXED	1
L117	A700024P3	COIL RF FIX 0.15UH 10%	1
L118	J709603P1	COIL	1
L119	J709603P1	COIL	1
L120	J709603P1	COIL	1
L121	A700024P25	COIL RF FIX 10UH 10%	1
L122	A700024P25	COIL RF FIX 10UH 10%	1
L123	J709287P1	CORE TOR FERR	1
L301	J707256P2	COIL FIX	1
L302	J707256P2	COIL FIX	1
L303	K805627G1	COIL RF FIXED 1 1/2T	1
L304	K805627G1	COIL RF FIXED 1 1/2T	1
L305	J707486P11	COIL RF FIX 2.2UH 10%	1
L306	K805627G1	COIL RF FIXED 1 1/2T	1
L307	K805627G1	COIL RF FIXED 1 1/2T	1
L308	K805627G1	COIL RF FIXED 1 1/2T	1
L309	K805627G1	COIL RF FIXED 1 1/2T	1
L311	K805627G1	COIL RF FIXED 1 1/2T	1
L312	J708428P2	COIL RF VAR 45 MHZ	1
L401	J707486P10	COIL RF FIX 1.5UH 10%	1
L403	K805570G2	COIL ASM	1
L404	K805570G1	COIL ASM	1
L405	J708428P1	COIL RF VAR 45 MHZ	1
L406	K805570G3	COIL ASM	1
L407	A700024P25	COIL RF FIX 10UH 10%	1
L408	J708428P2	COIL RF VAR 45 MHZ	1
L409	J707431P1	COIL RF VAR 455KHZ 25%	1
L410	J707431P1	COIL RF VAR 455KHZ 25%	1
L501	A700024P13	COIL RF FIX 1.0UH 10%	1
L502	A700024P13	COIL RF FIX 1.0UH 10%	1
L503	A700024P13	COIL RF FIX 1.0UH 10%	1
L504	A700024P13	COIL RF FIX 1.0UH 10%	1
L505	L855671P1	COIL RADIO FREQUENCY	1
L506	A700024P13	COIL RF FIX 1.0UH 10%	1
L507	A700024P13	COIL RF FIX 1.0UH 10%	1
L508	A700024P1	COIL RF FIX 0.1UH 10%	1
L509	K805527G1	COIL ASM	1
L510	J707256P3	COIL FIX	1
L511	J707256P3	COIL FIX	1
L512	K805653G1	COIL ASM 1 1/2T	1
L513	K805653G3	COIL ASM 3 1/2T	1
L601	A700024P13	COIL RF FIX 1.0UH 10%	1
L602	A700024P13	COIL RF FIX 1.0UH 10%	1
L603	A700024P13	COIL RF FIX 1.0UH 10%	1
L604	A700024P13	COIL RF FIX 1.0UH 10%	1
L605	L855671P1	COIL RADIO FREQUENCY	1
L606	A700024P13	COIL RF FIX 1.0UH 10%	1
L607	A700024P13	COIL RF FIX 1.0UH 10%	1
L608	A700024P1	COIL RF FIX 0.1UH 10%	1
L609	K805653G6	COIL ASM 6 1/2T	1
L610	A700024P29	COIL RF FIX 22UH 10%	1
P102	J707064P112	CONN PWB FEM 12-CKT	1
P105	A701883P4	CONN PWB FEM RECP	1
Q100	J707388P1	TSTR NPN SI BFR 53	1
Q101	J707388P1	TSTR NPN SI BFR 53	1
Q102	A701940P1	TSTR NPN SI RF-PWR 0.4W	1
Q103	A700066P2	TSTR NPN SI RF-PWR 2.0W	1
Q104	J708167P2	TSTR NPN SI RF-PWR 23W G1/G2/G3	1
Q105	J708556P1	TSTR NPN SI RF-PWR 28W G1/G2/G3	1
Q105	J708167P2	TSTR NPN SI RF-PWR 23W G4/G5/G6	1
Q106	J707432P1	TSTR PNP SI BCX 18	1
Q107	J707386P1	TSTR NPN SI BCW 32	1
Q108	J708406P1	TSTR NPN SI BD 233	1
Q201	J707435P1	TSTR PNP SI BC 369	1
Q202	J707386P1	TSTR NPN SI BCW 32	1
Q203	J707432P1	TSTR PNP SI BCX 18	1
Q204	J707386P1	TSTR NPN SI BCW 32	1
Q301	J706011P2	TSTR NPN SI BFR 91A	1
Q302	J708315P1	TSTR JFET SI 2N5245	1
Q401	J707817P1	TSTR JFET SI J 309	1
Q402	J707817P1	TSTR JFET SI J 309	1
Q403	J707419P1	TSTR JFET SI BF511	1
Q404	J708418P1	TSTR NPN SI BFS 20	1
Q405	J708418P1	TSTR NPN SI BFS 20	1
Q406	J708418P1	TSTR NPN SI BFS 20	1
Q407	J707386P1	TSTR NPN SI BCW 32	1
Q408	J707387P1	TSTR PNP SI BCW 30	1
Q501	J707817P1	TSTR JFET SI J 309	1
Q502	J707388P1	TSTR NPN SI BFR 53	1
Q503	J707388P1	TSTR NPN SI BFR 53	1
Q504	J708318P1	TSTR PNP SI BFT 92	1
Q601	J707817P1	TSTR JFET SI J 309	1
Q602	J707388P1	TSTR NPN SI BFR 53	1
Q603	J707388P1	TSTR NPN SI BFR 53	1
Q604	J708318P1	TSTR PNP SI BFT 92	1
Q605	J707386P1	TSTR NPN SI BCW 32	1
Q606	J707386P1	TSTR NPN SI BCW 32	1
Q607	J707386P1	TSTR NPN SI BCW 32	1
Q608	J707433P1	TSTR MFET SI BF 989	1
Q609	J707419P1	TSTR JFET SI BF511	1
R000	J707385P332	RES MFLM 1/8W 3K3 5%	1
R100	J707385P152	RES MFLM 1/8W 1K5 5%	1
R101	J707385P562	RES MFLM 1/8W 5K6 5%	1
R102	J707385P470	RES MFLM 1/8W 47R 5%	1
R103	J707385P152	RES MFLM 1/8W 1K5 5%	1
R104	J707385P562	RES MFLM 1/8W 5K6 5%	1
R105	J707385P270	RES MFLM 1/8W 27R 5%	1
R106	J707385P270	RES MFLM 1/8W 27R 5%	1
R107	J707385P102	RES MFLM 1/8W 1K0 5%	1
R108	J707385P100	RES MFLM 1/8W 10R 5%	1
R109	J707385P100	RES MFLM 1/8W 10R 5%	1
R110	J707385P947	RES MFLM 1/8W 4R7 20%	1
R111	J707385P102	RES MFLM 1/8W 1K0 5%	1
R112	J707385P270	RES MFLM 1/8W 27R 5%	1
R113	J707385P100	RES MFLM 1/8W 10R 5% G1/G2/G3	1
R114	J707385P100	RES MFLM 1/8W 10R 5% G1/G2/G3	1
R115	J707385P100	RES MFLM 1/8W 10R 5%	1
R116	J707385P100	RES MFLM 1/8W 10R 5%	1
R117	J707385P100	RES MFLM 1/8W 10R 5%	1
R119	J707385P473	RES MFLM 1/8W 47K 5%	1
R120	J707385P473	RES MFLM 1/8W 47K 5%	1

Pos	Code No.	Description	Qt
R121	J707385P221	RES MFLM 1/8W 220R 5% G1/G2/G3	1
R121	J707385P102	RES MFLM 1/8W 1K0 5% G4/G5/G6	1
R122	J707385P221	RES MFLM 1/8W 220R 5% G1/G2/G3	1
R122	J707385P102	RES MFLM 1/8W 1K0 5% G4/G5/G6	1
R123	J707385P220	RES MFLM 1/8W 22R 5%	1
R124	J707385P220	RES MFLM 1/8W 22R 5%	1
R125	J707385P391	RES MFLM 1/8W 390R 5% G1/G2/G3	1
R126	J707385P391	RES MFLM 1/8W 390R 5% G1/G2/G3	1
R127	J707385P101	RES MFLM 1/8W 100R 5% G1/G2/G3	1
R130	J707385P103	RES MFLM 1/8W 10K 5%	1
R131	J707385P472	RES MFLM 1/8W 4K7 5%	1
R131	J707385P683	RES MFLM 1/8W 68K 5% G1/G2/G3	1
R132	J708538P9	RES VAR CERM 200K 20%	1
R133	J708538P4	RES VAR CERM 5K0 20%	1
R134	J707385P100	RES MFLM 1/8W 10R 5%	1
R135	J706147P2	RES THERM PTC 80R 25% G1/G2/G3	1
R136	J707385P153	RES MFLM 1/8W 15K 5% G1/G2/G3	1
R136	J707385P101	RES MFLM 1/8W 100R 5% G4/G5/G6	1
R137	J707385P473	RES MFLM 1/8W 47K 5%	1
R138	J707385P333	RES MFLM 1/8W 33K 5%	1
R139	J707385P333	RES MFLM 1/8W 33K 5%	1
R140	J707385P104	RES MFLM 1/8W 100K 5%	1
R141	J707385P222	RES MFLM 1/8W 2K2 5%	1
R142	J707385P222	RES MFLM 1/8W 2K2 5%	1
R143	J707385P104	RES MFLM 1/8W 100K 5%	1
R144	J707385P682	RES MFLM 1/8W 6K8 5%	1
R145	J707385P473	RES MFLM 1/8W 47K 5%	1
R146	J707385P472	RES MFLM 1/8W 4K7 5%	1
R147	J707385P123	RES MFLM 1/8W 12K 5%	1
R148	J707385P331	RES MFLM 1/8W 330R 5%	1
R149	J707385P683	RES MFLM 1/8W 68K 5%	1
R150	J707385P104	RES MFLM 1/8W 100K 5%	1
R151	J707385P274	RES MFLM 1/8W 270K 5%	1
R152	J707385P562	RES MFLM 1/8W 5K6 5%	1
R153	J707385P222	RES MFLM 1/8W 2K2 5%	1
R154	J707385P102	RES MFLM 1/8W 1K0 5%	1
R155	J707385P472	RES MFLM 1/8W 4K7 5%	1
R201	J707385P561	RES MFLM 1/8W 560R 5%	1
R202	J707385P271	RES MFLM 1/8W 270R 5%	1
R203	J707385P153	RES MFLM 1/8W 15K 5%	1
R204	J707385P153	RES MFLM 1/8W 15K 5%	1
R205	J707385P472	RES MFLM 1/8W 4K7 5%	1
R206	J707385P272	RES MFLM 1/8W 2K7 5%	1
R207	J707385P563	RES MFLM 1/8W 56K 5%	1
R208	J707385P563	RES MFLM 1/8W 56K 5%	1
R209	J707385P271	RES MFLM 1/8W 270R 5%	1
R301	J707385P473	RES MFLM 1/8W 47K 5%	1
R302	J707385P221	RES MFLM 1/8W 220R 5%	1

Pos	Code No.	Description	Qt
R303	J707385P104	RES MFLM 1/8W 100K 5%	1
R304	J707385P104	RES MFLM 1/8W 100K 5%	1
R306	J707385P222	RES MFLM 1/8W 2K2 5%	1
R307	J707385P681	RES MFLM 1/8W 680R 5%	1
R308	J707385P560	RES MFLM 1/8W 56R 5%	1
R309	J707385P270	RES MFLM 1/8W 27R 5%	1
R310	J707385P104	RES MFLM 1/8W 100K 5%	1
R311	J707385P270	RES MFLM 1/8W 27R 5%	1
R312	J707385P104	RES MFLM 1/8W 100K 5%	1
R313	J707385P104	RES MFLM 1/8W 100K 5%	1
R314	J707385P104	RES MFLM 1/8W 100K 5%	1
R315	J707385P104	RES MFLM 1/8W 100K 5%	1
R316	J707385P104	RES MFLM 1/8W 100K 5%	1
R317	J707385P272	RES MFLM 1/8W 2K7 5%	1
R318	J707385P100	RES MFLM 1/8W 10R 5%	1
R319	J707385P101	RES MFLM 1/8W 100R 5%	1
R320	J707385P103	RES MFLM 1/8W 10K 5%	1
R321	J707385P270	RES MFLM 1/8W 27R 5%	1
R322	J707385P104	RES MFLM 1/8W 100K 5%	1
R323	J707385P102	RES MFLM 1/8W 1K0 5%	1
R324	J707385P101	RES MFLM 1/8W 100R 5%	1
R401	J707385P560	RES MFLM 1/8W 56R 5%	1
R402	J707385P100	RES MFLM 1/8W 10R 5%	1
R403	J707385P332	RES MFLM 1/8W 3K3 5%	1
R405	J707385P100	RES MFLM 1/8W 10R 5%	1
R406	J707385P820	RES MFLM 1/8W 82R 5%	1
R407	J707385P470	RES MFLM 1/8W 47R 5%	1
R408	J707385P470	RES MFLM 1/8W 47R 5%	1
R410	J707385P272	RES MFLM 1/8W 2K7 5%	1
R411	J707385P682	RES MFLM 1/8W 6K8 5%	1
R412	J707385P272	RES MFLM 1/8W 2K7 5%	1
R413	J707385P220	RES MFLM 1/8W 470R 5%	1
R414	J707385P220	RES MFLM 1/8W 22R 5%	1
R415	J707385P222	RES MFLM 1/8W 2K2 5%	1
R416	J707385P562	RES MFLM 1/8W 5K6 5%	1
R417	J707385P103	RES MFLM 1/8W 10K 5%	1
R418	J707385P153	RES MFLM 1/8W 15K 5%	1
R419	J707385P182	RES MFLM 1/8W 1K8 5%	1
R420	J707385P182	RES MFLM 1/8W 1K8 5%	1
R421	J707385P182	RES MFLM 1/8W 1K8 5%	1
R422	J707385P473	RES MFLM 1/8W 47K 5%	1
R423	J707385P153	RES MFLM 1/8W 15K 5%	1
R424	J708538P5	RES VAR CERM 10K 20%	1
R425	J707385P272	RES MFLM 1/8W 2K7 5%	1
R426	J707385P333	RES MFLM 1/8W 33K 5% G1/G4	1
R426	J707385P473	RES MFLM 1/8W 47K 5% G2/G3/G5/G6	1
R427	J707385P473	RES MFLM 1/8W 47K 5% G1/G3/G4/G6	1
R427	J707385P393	RES MFLM 1/8W 39K 5% G2/G5	1
R428	J707385P393	RES MFLM 1/8W 39K 5% G1/G4	1
R428	J707385P563	RES MFLM 1/8W 56K 5% G2/G3/G5/G6	1
R429	J707385P104	RES MFLM 1/8W 100K 5%	1
R430	J707385P334	RES MFLM 1/8W 330K 5%	1
R431	J707385P473	RES MFLM 1/8W 47K 5%	1

Pos	Code No.	Description	Qt
R432	J707385P473	RES MFLM 1/8W 47K 5%	1
R433	J707385P271	RES MFLM 1/8W 270R 5%	1
R434	J707385P102	RES MFLM 1/8W 1K0 5%	1
R435	J706147P3	RES THERM PTC 250R 25%	1
R436	J707385P392	RES MFLM 1/8W 3K9 5%	1
R437	J707406P7	RES THERM NTC 220R 10%	1
R438	J707385P222	RES MFLM 1/8W 2K2 5%	1
R439	J707385P392	RES MFLM 1/8W 3K9 5%	1
R440	J707385P392	RES MFLM 1/8W 3K9 5%	1
R441	J707385P101	RES MFLM 1/8W 100R 5%	1
R442	J708538P6	RES VAR CERM 20K 20%	1
R444	J707385P473	RES MFLM 1/8W 47K 5%	1
R445	J707385P273	RES MFLM 1/8W 27K 5%	1
R446	J707385P224	RES MFLM 1/8W 220K 5%	1
R447	J707385P392	RES MFLM 1/8W 3K9 5%	1
R448	J707385P101	RES MFLM 1/8W 100R 5%	1
R449	J707385P470	RES MFLM 1/8W 47R 5%	1
R450	J707385P103	RES MFLM 1/8W 10K 5%	1
R451	J707385P332	RES MFLM 1/8W 3K3 5%	1
R501	J707385P122	RES MFLM 1/8W 1K2 5%	1
R502	J707385P122	RES MFLM 1/8W 1K2 5%	1
R503	J707385P122	RES MFLM 1/8W 1K2 5%	1
R504	J707385P104	RES MFLM 1/8W 100K 5%	1
R505	J707385P104	RES MFLM 1/8W 100K 5%	1
R506	J707385P104	RES MFLM 1/8W 100K 5%	1
R508	J707385P103	RES MFLM 1/8W 10K 5%	1
R509	J707385P100	RES MFLM 1/8W 10R 5%	1
R510	J707385P332	RES MFLM 1/8W 3K3 5%	1
R512	J707385P561	RES MFLM 1/8W 560R 5%	1
R513	J707385P183	RES MFLM 1/8W 18K 5%	1
R514	J707385P472	RES MFLM 1/8W 4K7 5%	1
R515	J707385P271	RES MFLM 1/8W 270R 5%	1
R517	J707385P101	RES MFLM 1/8W 100R 5%	1
R520	J707385P682	RES MFLM 1/8W 6K8 5%	1
R521	J707385P152	RES MFLM 1/8W 1K5 5%	1
R522	J707385P680	RES MFLM 1/8W 68R 5%	1
R523	J707385P222	RES MFLM 1/8W 2K2 5%	1
R524	J707385P472	RES MFLM 1/8W 4K7 5%	1
R525	J707385P680	RES MFLM 1/8W 68R 5%	1
R526	J707385P104	RES MFLM 1/8W 100K 5%	1
R527	J707385P104	RES MFLM 1/8W 100K 5%	1
R528	J707385P103	RES MFLM 1/8W 10K 5%	1
R529	J707385P150	RES MFLM 1/8W 15R 5%	1
R530	J707385P182	RES MFLM 1/8W 1K8 5%	1
R531	J707385P682	RES MFLM 1/8W 6K8 5%	1
R532	J707385P392	RES MFLM 1/8W 3K9 5%	1
R601	J707385P122	RES MFLM 1/8W 1K2 5%	1
R602	J707385P122	RES MFLM 1/8W 1K2 5%	1
R603	J707385P122	RES MFLM 1/8W 1K2 5%	1
R604	J707385P104	RES MFLM 1/8W 100K 5%	1
R605	J707385P104	RES MFLM 1/8W 100K 5%	1
R606	J707385P104	RES MFLM 1/8W 100K 5%	1
R607	J707385P183	RES MFLM 1/8W 18K 5%	1
R608	J707385P271	RES MFLM 1/8W 270R 5%	1
R609	J707385P223	RES MFLM 1/8W 22K 5%	1
R610	J707385P101	RES MFLM 1/8W 100R 5%	1
R611	J707385P682	RES MFLM 1/8W 6K8 5%	1
R612	J707385P222	RES MFLM 1/8W 2K2 5%	1
R613	J707385P101	RES MFLM 1/8W 100R 5%	1

Pos	Code No.	Description	Qt
R614	J707385P101	RES MFLM 1/8W 100R 5%	1
R615	J707385P102	RES MFLM 1/8W 1K0 5%	1
R616	J707385P102	RES MFLM 1/8W 1K0 5%	1
R617	J707385P272	RES MFLM 1/8W 2K7 5%	1
R618	J707385P330	RES MFLM 1/8W 33R 5%	1
R619	J707385P102	RES MFLM 1/8W 1K0 5%	1
R620	J707385P123	RES MFLM 1/8W 12K 5%	1
R621	J707385P223	RES MFLM 1/8W 22K 5%	1
R622	J707385P470	RES MFLM 1/8W 47R 5%	1
R623	J707385P100	RES MFLM 1/8W 10R 5%	1
R624	J707385P103	RES MFLM 1/8W 10K 5%	1
R625	J707385P224	RES MFLM 1/8W 220K 5%	1
R626	J707385P393	RES MFLM 1/8W 39K 5%	1
R627	J707385P103	RES MFLM 1/8W 10K 5%	1
R628	J707385P100	RES MFLM 1/8W 10R 5%	1
R629	J707385P823	RES MFLM 1/8W 82K 5% G3/G6	1
R629	J707385P393	RES MFLM 1/8W 39K 5% G1/G2/G4/G5	1
R630	J707385P223	RES MFLM 1/8W 22K 5%	1
R631	J707385P470	RES MFLM 1/8W 47R 5% G1/G2/G4/G5	1
R632	J707385P102	RES MFLM 1/8W 1K0 5%	1
R633	J707385P332	RES MFLM 1/8W 3K3 5%	1
R634	J707385P181	RES MFLM 1/8W 180R 5%	1
R635	J707385P154	RES MFLM 1/8W 150K 5%	1
R636	J707385P332	RES MFLM 1/8W 3K3 5%	1
R637	J707385P682	RES MFLM 1/8W 6K8 5%	1
R638	J707385P154	RES MFLM 1/8W 150K 5% G1/G2/G4/G5	1
R638	J707385P823	RES MFLM 1/8W 82K 5% G3/G6	1
R639	J707385P682	RES MFLM 1/8W 6K8 5% G1/G2/G4/G5	1
R639	J707385P822	RES MFLM 1/8W 8K2 5% G3/G6	1
R640	J707385P105	RES MFLM 1/8W 1M0 10%	1
R641	J707385P224	RES MFLM 1/8W 220K 5%	1
R642	J707385P103	RES MFLM 1/8W 10K 5%	1
R643	J707385P472	RES MFLM 1/8W 4K7 5%	1
R644	J707385P333	RES MFLM 1/8W 33K 5%	1
R645	J707385P683	RES MFLM 1/8W 68K 5%	1
R646	J707385P104	RES MFLM 1/8W 100K 5%	1
R647	J707385P223	RES MFLM 1/8W 22K 5%	1
R648	J707385P104	RES MFLM 1/8W 100K 5%	1
R649	J707385P472	RES MFLM 1/8W 4K7 5%	1
R650	J707385P333	RES MFLM 1/8W 33K 5%	1
R651	J707385P562	RES MFLM 1/8W 5K6 5%	1
R652	J707385P183	RES MFLM 1/8W 18K 5%	1
R653	J707385P393	RES MFLM 1/8W 39K 5%	1
R654	J707385P823	RES MFLM 1/8W 82K 5%	1
R655	J707385P154	RES MFLM 1/8W 150K 5%	1
R656	J707385P102	RES MFLM 1/8W 1K0 5%	1
R657	J707385P333	RES MFLM 1/8W 33K 5%	1
R658	J707385P473	RES MFLM 1/8W 47K 5%	1
R659	J707385P393	RES MFLM 1/8W 39K 5%	1
R660	J708538P5	RES VAR CERM 10K 20%	1
R661	J707385P333	RES MFLM 1/8W 33K 5%	1
R662	J707385P824	RES MFLM 1/8W 820K 5%	1

PARTS LIST FOR RADIO FREQUENCY BOARD RF666X : M905779GX BD. REV. 0/I

Pos	Code No.	Description	Qt
R663	J707385P124	RES MFLM 1/8W 120K 5%	1
R664	J707385P124	RES MFLM 1/8W 120K 5%	1
R665	J707385P122	RES MFLM 1/8W 1K2 5%	1
R666	J707385P221	RES MFLM 1/8W 220R 5%	1
R667	J707385P103	RES MFLM 1/8W 10K 5%	1
R668	J707385P562	RES MFLM 1/8W 5K6 5%	1
R669	J707385P822	RES MFLM 1/8W 8K2 5%	1
R670	J707385P822	RES MFLM 1/8W 8K2 5%	1
R671	J707385P101	RES MFLM 1/8W 100R 5%	1
R672	J708538P5	RES VAR CERM 10K 20%	1
R673	J707385P123	RES MFLM 1/8W 12K 5%	1
R674	J708538P5	RES VAR CERM 10K 20%	1
R675	J707385P821	RES MFLM 1/8W 820R 5%	1
R676	J707385P683	RES MFLM 1/8W 68K 5%	1
R677	J708538P5	RES VAR CERM 10K 20%	1
R678	J707385P683	RES MFLM 1/8W 68K 5%	1
R679	J707385P561	RES MFLM 1/8W 560R 5%	1
R680	J707385P271	RES MFLM 1/8W 270R 5%	1
R681	J707385P683	RES MFLM 1/8W 68K 5%	1
R682	J707385P561	RES MFLM 1/8W 560R 5%	1
R683	J707385P271	RES MFLM 1/8W 270R 5%	1
R684	J707385P105	RES MFLM 1/8W 1M0 10%	1
R685	J707385P183	RES MFLM 1/8W 18K 5%	1
R686	J707385P103	RES MFLM 1/8W 10K 5%	1
R687	J707385P183	RES MFLM 1/8W 18K 5%	1
R688	J707385P103	RES MFLM 1/8W 10K 5%	1
R689	J707385P124	RES MFLM 1/8W 120K 5%	1
R690	J707385P152	RES MFLM 1/8W 1K5 5%	1
R691	J707385P223	RES MFLM 1/8W 22K 5%	1
R692	J707385P105	RES MFLM 1/8W 1M0 10%	1
R693	J707385P223	RES MFLM 1/8W 22K 5%	1
R694	J707385P223	RES MFLM 1/8W 22K 5%	1
R695	J707385P105	RES MFLM 1/8W 1M0 10%	1
R696	J707385P223	RES MFLM 1/8W 22K 5%	1
R697	J707385P223	RES MFLM 1/8W 22K 5%	1
R698	J707385P105	RES MFLM 1/8W 1M0 10%	1
R699	J707385P273	RES MFLM 1/8W 27K 5%	1
R700	J707385P103	RES MFLM 1/8W 10K 5%	1
R701	J707385P824	RES MFLM 1/8W 820K 5%	1
R702	J707385P824	RES MFLM 1/8W 820K 5%	1
R703	J707385P154	RES MFLM 1/8W 150K 5%	1
R704	J707385P561	RES MFLM 1/8W 560R 5%	1
R705	J707385P122	RES MFLM 1/8W 1K2 5%	1
R706	J707385P561	RES MFLM 1/8W 560R 5%	1
U100	J708165P2	IC LIN OP-AMP 324	1
U201	J708333P1	IC LIN VR FIX 4785	1
U401	J707449P1	IC LIN IF-AMP 3357	1
U402	M905766G1	INT CKT SQ 4002 G1/G2/G4/G5	1
U402	M905766G2	INT CKT SQ 4003 G3/G6	1
U601	J707859P1	IC LIN OP-AMP 204	1
U602	J707859P1	IC LIN OP-AMP 204	1
U603	J707859P1	IC LIN OP-AMP 204	1
U604	J707859P1	IC LIN OP-AMP 204	1
U606	J707243P1	IC DIG REG 4094	1
U607	J707374P3	IC PLL PRESC 12017 G1/G2/G4/G5	1
U607	J707374P4	IC PLL PRESC 12018 G3/G6	1
U608	B800902P1	IC PLL SYN CUSTOM DES	1
U609	J707859P1	IC LIN OP-AMP 204	1
U610	J708503P2	IC LIN CMPAR LM 339	1
U615	J708621P2	CPLR OPTO PC 827	1
U616	J708503P2	IC LIN CMPAR LM 339	1
W004	J706451P1	WIRE STRAP	1
W1	A700184P1	RES WIRE JMPR OR JUMPER	1
W3	J707256P1	COIL FIX	1
W5	J708717P1	STRAP	1
W6	J708716P1	STRAP G1/G2/G3	1
Y401	J708426P1	CRYSTAL UNIT 44.5450MHZ	1
Z401	J708330P1	FLTR CRY 45.0 +/-7.5KHZ G1/G4	1
Z401	J708330P2	FLTR CRY 45.0 +/-7.5KHZ G2/G5	1
Z401	J708330P3	FLTR CRY 45.0 +/-7.5KHZ G3/G6	1
Z402	J707446P1	FLTR CER 455K +/-10KHZ G1/G4	1
Z402	J707446P3	FLTR CER 455K +/-10KHZ G2/G5	1
Z402	J707446P4	FLTR CER 455K +/-10KHZ G3/G6	1
Z403	J707446P1	FLTR CER 455K +/-10KHZ G1/G4	1
Z403	J707446P3	FLTR CER 455K +/-10KHZ G2/G5	1
Z403	J707446P4	FLTR CER 455K +/-10KHZ G3/G6	1
	M905780P1R0	BD PW G1/G2/G3	1
	M905780P2R0	BD PW G4/G5/G6	1
		NON ELECTRONICAL PARTS	
	K805569G1	SHIELD METALLIZED	1
	J708966G1	HEAT SINK MODF	1
	J708561P3	COIL FIXED	1
	J708561P3	COIL FIXED	1

DATE: 10/ 3/1988

Pos	Code No	Description	Qt
	M905779G1	RF6662S25 CHANNEL SPACING 25kHZ	
	M905779G2	RF6663S25 CHANNEL SPACING 20kHZ	
	M905779G3	RF6664S25 CHANNEL SPACING 12.5kHZ	
	M905779G4	RF6662S6 CHANNEL SPACING 25kHZ	
	M905779G5	RF6662S6 CHANNEL SPACING 20kHZ	
	M905779G6	RF6662S6 CHANNEL SPACING 12.5kHZ	
C100	J707436P13	CAP CER NPO 10P 5%	1
C101	J707436P21	CAP CER NPO 15P 5%	1
C102	J707438P14	CAP CER CL2 10N 10%	1
C103	J707436P8	CAP CER NPO 3P9 .25P	1
C104	J707436P8	CAP CER NPO 3P9 .25P	1
C105	J707436P33	CAP CER NPO 27P 5%	1
C107	J707436P61	CAP CER NPO 100P 5%	1
C108	J707436P21	CAP CER NPO 15P 5%	1
C109	J707436P33	CAP CER NPO 27P 5%	1
C110	J707436P41	CAP CER NPO 39P 5%	1
C111	J707438P14	CAP CER CL2 10N 10%	1
C112	J707436P61	CAP CER NPO 100P 5%	1
C113	J707436P33	CAP CER NPO 27P 5%	1
C114	J707809P13	CAP CER NPO 10P 5%	1
C115	J707809P18	CAP CER NPO 27P 5%	1
C116	J707809P20	CAP CER NPO 39P 5%	1
C117	J707809P25	CAP CER NPO 100P 5%	1
C118	J707438P8	CAP CER CL2 3N3 10%	1
C119	J707809P25	CAP CER NPO 100P 5%G1/G2/G3	1
C120	J707809P21	CAP CER NPO 47P 5%	1
C121	A700006P19	CAP MICA 27P 5% G1/G2/G3	1
C122	A700006P19	CAP MICA 27P 5% G1/G2/G3	1
C123	J707809P25	CAP CER NPO 100P 5%G1/G2/G3	1
C124	J707438P14	CAP CER CL2 10N 10%G1/G2/G3	1
C126	A700006P11	CAP MICA 15P 5% G1/G2/G3	1
C127	A700006P11	CAP MICA 15P 5% G1/G2/G3	1
C128	J707809P14	CAP CER NPO 12P 5%G1/G2/G3	1
C128	J707809P13	CAP CER NPO 10P 5%G4/G5/G6	1
C129	J707809P14	CAP CER NPO 12P 5%G1/G2/G3	1
C129	J707809P13	CAP CER NPO 10P 5%G4/G5/G6	1
C130	A700006P19	CAP MICA 27P 5%	1
C131	A700006P19	CAP MICA 27P 5%	1
C132	J707809P27	CAP CER NPO 150P 5%	1
C133	J707438P14	CAP CER CL2 10N 10%	1
C134	A700006P26	CAP MICA 47P 5% G1/G2/G3	1
C134	A700006P28	CAP MICA 56P 5% G4/G5/G6	1
C135	A700006P26	CAP MICA 47P 5% G1/G2/G3	1
C135	A700006P28	CAP MICA 56P 5% G4/G5/G6	1
C136	A700006P14	CAP MICA 18P 5%	1
C137	J707353P6	CAP ELECT 4U7 25V	1
C138	J707438P22	CAP CER CL2 47N 10%	1
C139	J707809P25	CAP CER NPO 100P 5%	1
C140	J707809P25	CAP CER NPO 100P 5%	1
C141	J707809P25	CAP CER NPO 100P 5%	1
C142	J707809P25	CAP CER NPO 100P 5%	1
C143	J707809P25	CAP CER NPO 100P 5%	1
C144	J707809P25	CAP CER NPO 100P 5%	1
C145	J707809P25	CAP CER NPO 100P 5%	1
C146	A700006P4	CAP PTFE 8P2 10%	1
C147	A700006P11	CAP MICA 15P 5%	1
C148	A700006P11	CAP MICA 15P 5%	1
C149	A700006P3	CAP PTFE 6P8 10%	1
C150	J707809P8	CAP CER NPO 3P9 .25P	1
C151	J707438P8	CAP CER CL2 3N3 10%	1
C152	J707436P61	CAP CER NPO 100P 5%	1
C153	J707809P1	CAP CER NPO 1P0 .25P	1
C154	J707809P1	CAP CER NPO 1P0 .25P	1
C155	J707809P25	CAP CER NPO 100P 5%	1
C160	J707436P61	CAP CER NPO 100P 5%	1
C161	J707436P61	CAP CER NPO 100P 5%	1
C162	J707353P3	CAP ELECT 0U47 50V	1
C163	J707436P61	CAP CER NPO 100P 5%	1
C164	J707438P20	CAP CER CL2 33N 10%	1
C165	J707438P14	CAP CER CL2 10N 10%	1
C166	J707436P61	CAP CER NPO 100P 5%	1
C167	J707436P61	CAP CER NPO 100P 5%	1
C168	J707438P14	CAP CER CL2 10N 10%	1
C169	J707438P26	CAP CER CL2 100N 10%	1
C170	J707436P61	CAP CER NPO 100P 5%	1
C171	J707436P61	CAP CER NPO 100P 5%	1
C201	J707438P26	CAP CER CL2 100N 10%	1
C202	J707444P8	CAP TA SOL 22U 16V	1
C203	J707444P6	CAP TA SOL 4U7 35V	1
C204	J707438P3	CAP CER CL2 470P 10%	1
C205	J706024P7	CAP ELECT 330U 25 G3/G6	1

Pos	Code No	Description	Qt
C301	J707809P25	CAP CER NPO 100P 5%	1
C302	J707809P15	CAP CER NPO 15P 5%	1
C303	J707809P15	CAP CER NPO 15P 5%	1
C304	J708287P1	CAP VAR CER 3.3/8 PF	1
C305	J707436P10	CAP CER NPO 5P6 .25P	1
C306	J707483P6	CAP PHEN 0P82 5%	1
C307	J707436P61	CAP CER NPO 100P 5%	1
C308	J707436P11	CAP CER NPO 6P8 .25P	1
C309	J708287P1	CAP VAR CER 3.3/8 PF	1
C310	J707438P3	CAP CER CL2 470P 10%	1
C311	J707436P37	CAP CER NPO 33P 5%	1
C312	J707436P69	CAP CER NPO 220P 5%	1
C313	J707438P3	CAP CER CL2 470P 10%	1
C314	J707436P5	CAP CER NPO 2P2 .25P	1
C315	J707436P12	CAP CER NPO 8P2 .25P	1
C316	J708287P1	CAP VAR CER 3.3/8 PF	1
C317	J707444P2	CAP TA SOL 0U22 35V	1
C318	J707438P3	CAP CER CL2 470P 10%	1
C319	J707436P11	CAP CER NPO 6P8 .25P	1
C320	J707438P3	CAP CER CL2 470P 10%	1
C321	J708287P1	CAP VAR CER 3.3/8 PF	1
C322	J707483P4	CAP PHEN 0P56 5%	1
C323	J707483P4	CAP PHEN 0P56 5%	1
C324	J707436P11	CAP CER NPO 6P8 .25P	1
C325	J707438P3	CAP CER CL2 470P 10%	1
C326	J708287P1	CAP VAR CER 3.3/8 PF	1
C327	J707436P11	CAP CER NPO 6P8 .25P	1
C328	J707483P1	CAP PHEN 0P47 5%	1
C329	J707436P10	CAP CER NPO 5P6 .25P	1
C330	J708287P1	CAP VAR CER 3.3/8 PF	1
C331	J707436P6	CAP CER NPO 2P7 .25P	1
C332	J708287P1	CAP VAR CER 3.3/8 PF	1
C333	J707436P12	CAP CER NPO 8P2 .25P	1
C334	J707483P2	CAP PHEN 0P33 5%	1
C335	J707438P3	CAP CER CL2 470P 10%	1
C336	J708287P1	CAP VAR CER 3.3/8 PF	1
C337	J707436P12	CAP CER NPO 8P2 .25P	1
C338	J707436P11	CAP CER NPO 6P8 .25P	1
C339	J707438P14	CAP CER CL2 10N 10%	1
C340	J707438P14	CAP CER CL2 10N 10%	1
C341	J707438P3	CAP CER CL2 470P 10%	1
C342	J708287P1	CAP VAR CER 3.3/8 PF	1
C343	J707436P13	CAP CER NPO 10P 5%	1
C344	J707438P3	CAP CER CL2 470P 10%	1
C345	J707436P37	CAP CER NPO 33P 5%	1
C347	J707438P3	CAP CER CL2 470P 10%	1
C348	J707438P3	CAP CER CL2 470P 10%	1
C349	J707436P4	CAP CER NPO 1P8 .25P	1
C350	J707438P3	CAP CER CL2 470P 10%	1
C401	J707438P8	CAP CER CL2 3N3 10%	1
C402	J707438P8	CAP CER CL2 3N3 10%	1
C403	J707438P8	CAP CER CL2 3N3 10%	1
C404	J707436P9	CAP CER NPO 4P7 .25P	1
C405	J707438P26	CAP CER CL2 100N 10%	1
C406	J707436P10	CAP CER NPO 5P6 .25P	1
C407	J707436P9	CAP CER NPO 4P7 .25P	1
C408	J707438P5	CAP CER CL2 1N 10%	1
C409	J707438P8	CAP CER CL2 3N3 10%	1
C410	J707444P8	CAP TA SOL 22U 16V	1
C411	J707438P26	CAP CER CL2 100N 10%	1
C412	J707438P26	CAP CER CL2 100N 10%	1
C413	J707436P21	CAP CER NPO 15P 5%	1
C414	J707438P8	CAP CER CL2 3N3 10%	1
C415	J707438P8	CAP CER CL2 3N3 10%	1
C416	J708702P16	CAP CER N750 18P 5%	1
C417	J707436P49	CAP CER NPO 56P 5%	1
C418	J707438P14	CAP CER CL2 10N 10%	1
C419	J707438P26	CAP CER CL2 100N 10%	1
C420	J707438P14	CAP CER CL2 10N 10%	1
C421	J707438P26	CAP CER CL2 100N 10%	1
C422	J707438P26	CAP CER CL2 100N 10%	1
C423	J707436P13	CAP CER NPO 10P 5%	1
C424	J707438P8	CAP CER CL2 3N3 10%	1
C425	J707412P13	CAP PYES 470N 10%	1
C426	J707436P93	CAP CER NPO 2N2 5%	1
C427	J707436P73	CAP CER NPO 330P 5%	1
C428	J707436P71	CAP CER NPO 270P 5% G1/G2/G4/G5	1
C428	J707436P69	CAP CER NPO 220P 5% G3/G6	1
C429	J707438P14	CAP CER CL2 10N 10%	1
C430	J707444P8	CAP TA SOL 22U 16V	1
C431	J707444P8	CAP TA SOL 22U 16V	1
C432	J707438P26	CAP CER CL2 100N 10%	1
C433	J707438P26	CAP CER CL2 100N 10%	1
C434	J707438P8	CAP CER CL2 3N3 10%	1

DATE: 10/ 3/1988

Pos	Code No	Description	Qt
C435	J707436P1	CAP CER NPO 1P0 .25P	1
C436	J707438P26	CAP CER CL2 100N 10%	1
C501	J707412P11	CAP PYES 220N 10%	1
C502	J707412P11	CAP PYES 220N 10%	1
C503	J707412P11	CAP PYES 220N 10%	1
C504	A700235P3	CAP CER N150 1P5 .25P	1
C505	A700235P3	CAP CER N150 1P5 .25P	1
C506	A700235P6	CAP CER N150 2P7 .25P	1
C507	A700235P5	CAP CER N150 2P2 .25P	1
C508	A700235P10	CAP CER N150 5P6 .25P	1
C509	A700235P12	CAP CER N150 8P2 .25P	1
C510	A700235P9	CAP CER N150 4P7 .25P	1
C512	J707483P7	CAP PHEN 1P00 5%	1
C513	J707438P3	CAP CER CL2 470P 10%	1
C515	J707436P9	CAP CER NPO 4P7 .25P	1
C516	J707436P7	CAP CER NPO 3P3 .25P	1
C517	J707444P6	CAP TA SOL 4U7 35V	1
C518	J707436P6	CAP CER NPO 2P7 .25P	1
C519	J707438P3	CAP CER CL2 470P 10%	1
C520	J707436P8	CAP CER NPO 3P9 .25P	1
C521	J707436P9	CAP CER NPO 4P7 .25P	1
C522	J707438P3	CAP CER CL2 470P 10%	1
C523	J707436P5	CAP CER NPO 2P2 .25P	1
C525	J707438P3	CAP CER CL2 470P 10%	1
C526	J707436P17	CAP CER NPO 12P 5%	1
C527	J707438P3	CAP CER CL2 470P 10%	1
C528	J707436P65	CAP CER NPO 150P 5%	1
C529	J708287P1	CAP VAR CER 3.3/8 PF	1
C530	J707436P10	CAP CER NPO 5P6 .25P	1
C531	J707483P7	CAP PHEN 1P00 5%	1
C532	J707436P10	CAP CER NPO 5P6 .25P	1
C533	J708287P1	CAP VAR CER 3.3/8 PF	1
C534	J707436P7	CAP CER NPO 3P3 .25P	1
C535	J707436P7	CAP CER NPO 3P3 .25P	1
C536	J707438P3	CAP CER CL2 470P 10%	1
C537	J707438P3	CAP CER CL2 470P 10%	1
C538	J707438P3	CAP CER CL2 470P 10%	1
C539	J707438P3	CAP CER CL2 470P 10%	1
C540	J707438P3	CAP CER CL2 470P 10%	1
C541	J707438P3	CAP CER CL2 470P 10%	1
C542	J707438P3	CAP CER CL2 470P 10%	1
C543	J707438P3	CAP CER CL2 470P 10%	1
C544	J707438P3	CAP CER CL2 470P 10%	1
C545	J707438P3	CAP CER CL2 470P 10%	1
C601	J707412P11	CAP PYES 220N 10%	1
C602	J707412P11	CAP PYES 220N 10%	1
C603	J707412P11	CAP PYES 220N 10%	1
C604	A700235P5	CAP CER N150 2P2 .25P	1
C605	A700235P3	CAP CER N150 1P5 .25P	1
C606	A700235P8	CAP CER N150 3P9 .25P	1
C607	A700235P9	CAP CER N150 4P7 .25P	1
C608	A700235P12	CAP CER N150 8P2 .25P	1
C609	A700235P33	CAP CER N150 13P 5%	1
C610	A700235P12	CAP CER N150 8P2 .25P	1
C611	J707436P7	CAP CER NPO 3P3 .25P	1
C612	J707436P9	CAP CER NPO 4P7 .25P	1
C613	J707444P6	CAP TA SOL 4U7 35V	1
C614	J707436P6	CAP CER NPO 2P7 .25P	1
C615	J707436P77	CAP CER NPO 470P 5%	1
C616	J707438P3	CAP CER CL2 470P 10%	1
C617	J707436P7	CAP CER NPO 3P3 .25P	1
C618	J707436P9	CAP CER NPO 4P7 .25P	1
C619	J707438P3	CAP CER CL2 470P 10%	1
C620	J707436P1	CAP CER NPO 1P0 .25P	1
C621	J707438P3	CAP CER CL2 470P 10%	1
C622	J707438P3	CAP CER CL2 470P 10%	1
C623	J707438P3	CAP CER CL2 470P 10%	1
C624	J707436P65	CAP CER NPO 150P 5%	1
C625	J707436P29	CAP CER NPO 22P 5%	1
C626	J707438P5	CAP CER CL2 1N 10%	1
C627	J707438P14	CAP CER CL2 10N 10%	1
C628	J707436P89	CAP CER NPO 1N5 5%	1
C629	J707436P65	CAP CER NPO 150P 5%	1
C630	J707438P26	CAP CER CL2 100N 10%	1
C632	J707438P26	CAP CER CL2 100N 10%	1
C633	J707444P17	CAP TA SOL 47U 10V	1
C634	J707438P26	CAP CER CL2 100N 10%	1
C635	J707438P3	CAP CER CL2 470P 10%	1
C636	J707444P17	CAP TA SOL 47U 10V	1
C637	J707438P26	CAP CER CL2 100N 10%	1
C639	J707438P8	CAP CER CL2 3N3 10%	1
C640	J707412P9	CAP PYES 100N 10%	1
C641	J707412P13	CAP PYES 470N 10%	1

Pos	Code No	Description	Qt
C642	J707412P13	CAP PYES 470N 10%	1
C643	J707438P22	CAP CER CL2 47N 10%	1
C644	J707436P6	CAP CER NPO 2P7 .25P	1
C645	J707436P69	CAP CER NPO 220P 5%	1
C647	J707436P13	CAP CER NPO 10P 5%	1
C648	J707436P69	CAP CER NPO 220P 5%	1
C653	J707444P6	CAP TA SOL 4U7 35V	1
C656	J707436P77	CAP CER NPO 470P 5%	1
C657	J707438P3	CAP CER CL2 470P 10%	1
C658	J707438P14	CAP CER CL2 10N 10%	1
C659	J707438P5	CAP CER CL2 1N 10%	1
C660	J707438P3	CAP CER CL2 470P 10%	1
C661	J707438P3	CAP CER CL2 470P 10%	1
C662	J707438P3	CAP CER CL2 470P 10%	1
C663	J707438P3	CAP CER CL2 470P 10%	1
C664	J707438P26	CAP CER CL2 100N 10%	1
C665	J707438P3	CAP CER CL2 470P 10%	1
C666	J707438P3	CAP CER CL2 470P 10%	1
C667	J707438P3	CAP CER CL2 470P 10%	1
C668	J707438P12	CAP CER CL2 6N8 5%	1
C669	J707436P61	CAP CER NPO 100P 5%	1
C670	J707436P17	CAP CER NPO 12P 5%	1
C671	J707438P26	CAP CER CL2 100N 10%	1
D100	J706892P2	DIO SI PIN UM 9678	1
D101	A700047P3	DIO SI SIG 1N6263	1
D102	J707390P1	DIO SI SIG BAV 74	1
D301	J706892P2	DIO SI PIN UM 9678	1
D302	J706007P1	DIO SI CAP BB505B	1
D303	J706007P1	DIO SI CAP BB505B	1
D304	A700047P3	DIO SI SIG 1N6263	1
D305	J706007P1	DIO SI CAP BB505B	1
D306	J706007P1	DIO SI CAP BB505B	1
D307	J706007P1	DIO SI CAP BB505B	1
D308	J706007P1	DIO SI CAP BB505B	1
D309	J706007P1	DIO SI CAP BB505B	1
D310	J706007P1	DIO SI CAP BB505B	1
D311	J706007P1	DIO SI CAP BB505B	1
D401	A700025P8	DIO SI ZENR 6V8 5% 0.4W	1
D501	J706007P1	DIO SI CAP BB505B	1
D502	J706007P1	DIO SI CAP BB505B	1
D503	J706007P1	DIO SI CAP BB505B	1
D504	J706007P1	DIO SI CAP BB505B	1
D505	J707769P2	DIO SI CAP BBY 31	1
D506	J707390P1	DIO SI SIG BAV 74	1
D507	J707769P1	DIO SI CAP BBY 31	1
D508	J707769P1	DIO SI CAP BBY 31	1
D601	J706007P1	DIO SI CAP BB505B	1
D602	J706007P1	DIO SI CAP BB505B	1
D603	J706007P1	DIO SI CAP BB505B	1
D604	J706007P1	DIO SI CAP BB505B	1
D605	J707390P1	DIO SI SIG BAV 74	1
D606	J708681P1	DIO SI SIG BAW 56	1
D607	J707390P1	DIO SI SIG BAV 74	1
D608	J707390P1	DIO SI SIG BAV 74	1
D610	J708681P1	DIO SI SIG BAW 56	1
D611	J707389P1	DIO SI SIG BAV 99	1
L100	K805653G2	COIL ASM 2 1/2T	1
L101	A700024P1	COIL RF FIX 0.1UH 10%	1
L102	K805653G2	COIL ASM 2 1/2T	1
L103	J707256P2	COIL FIX	1
L104	K805653G2	COIL ASM 2 1/2T	1
L105	J707256P2	COIL FIX	1
L106	K805653G1	COIL ASM 1 1/2T	1
L107	A701237P1	COIL	1
L108	J707339G1	COIL FIX ASM	1
L109	A700024P1	COIL RF FIX 0.1UH 10%G1/G2/G3	1
L110	J707339G1	COIL FIX ASM G1/G2/G3	1
L111	A701237P1	COIL G1/G2/G3	1
L112	J709287P1	CORE TOR FERR G1/G2/G3	1
L113	A700024P1	COIL RF FIX 0.1UH 10%	1
L114	J707339G1	COIL FIX ASM	1
L115	A701237P1	COIL G1/G2/G3	1
L115	A701237P3	COIL FIX G4/G5/G6	1
L116	J708561P4	COIL FIXED	1
L117	A700024P3	COIL RF FIX 0.15UH 10%	1
L118	J709603P1	COIL	1
L119	J709603P1	COIL	1
L120	J709603P1	COIL	1
L121	A700024P25	COIL RF FIX 10UH 10%	1
L122	A700024P25	COIL RF FIX 10UH 10%	1
L123	J709287P1	CORE TOR FERR	1
L301	J707256P2	COIL FIX	1
L302	J707256P2	COIL FIX	1

DATE: 10/ 3/1988

Pos	Code No	Description	Qt
L303	K805627G1	COIL RF FIXED 1 1/2T	1
L304	K805627G1	COIL RF FIXED 1 1/2T	1
L305	J707486P11	COIL RF FIX 2.2UH 10%	1
L306	K805627G1	COIL RF FIXED 1 1/2T	1
L307	K805627G1	COIL RF FIXED 1 1/2T	1
L308	K805627G1	COIL RF FIXED 1 1/2T	1
L309	K805627G1	COIL RF FIXED 1 1/2T	1
L311	K805627G1	COIL RF FIXED 1 1/2T	1
L312	J708428P2	COIL RF VAR 45 MHZ	1
L401	J707486P10	COIL RF FIX 1.5UH 10%	1
L403	K805570G2	COIL ASM	1
L404	K805570G1	COIL ASM	1
L405	J708428P1	COIL RF VAR 45 MHZ	1
L406	K805570G3	COIL ASM	1
L407	A700024P25	COIL RF FIX 10UH 10%	1
L408	J708428P2	COIL RF VAR 45 MHZ	1
L409	J707431P1	COIL RF VAR 455KHZ 25%	1
L410	J707431P1	COIL RF VAR 455KHZ 25%	1
L501	A700024P13	COIL RF FIX 1.0UH 10%	1
L502	A700024P13	COIL RF FIX 1.0UH 10%	1
L503	A700024P13	COIL RF FIX 1.0UH 10%	1
L504	A700024P13	COIL RF FIX 1.0UH 10%	1
L505	L855671P1	COIL RADIO FREQUENCY	1
L506	A700024P13	COIL RF FIX 1.0UH 10%	1
L507	A700024P13	COIL RF FIX 1.0UH 10%	1
L508	A700024P1	COIL RF FIX 0.1UH 10%	1
L509	K805527G1	COIL ASM	1
L510	J707256P3	COIL FIX	1
L511	J707256P3	COIL FIX	1
L512	K805653G1	COIL ASM 1 1/2T	1
L513	K805653G3	COIL ASM 3 1/2T	1
L601	A700024P13	COIL RF FIX 1.0UH 10%	1
L602	A700024P13	COIL RF FIX 1.0UH 10%	1
L603	A700024P13	COIL RF FIX 1.0UH 10%	1
L604	A700024P13	COIL RF FIX 1.0UH 10%	1
L605	L855671P1	COIL RADIO FREQUENCY	1
L606	A700024P13	COIL RF FIX 1.0UH 10%	1
L607	A700024P13	COIL RF FIX 1.0UH 10%	1
L608	A700024P1	COIL RF FIX 0.1UH 10%	1
L609	K805653G6	COIL ASM 6 1/2T	1
L610	A700024P29	COIL RF FIX 22UH 10%	1
P102	J707064P112	CONN PWB FEM 12-CKT	1
P105	A701883P4	CONN PWB FEM RECP	1
Q100	J707388P1	TSTR NPN SI BFR 53	1
Q101	J707388P1	TSTR NPN SI BFR 53	1
Q102	A701940P1	TSTR NPN SI RF-PWR 0.4W	1
Q103	A700066P2	TSTR NPN SI RF-PWR 2.0W	1
Q104	J708167P2	TSTR NPN SI RF-PWR 23W G1/G2/G3	1
Q105	J708556P1	TSTR NPN SI RF-PWR 28W G1/G2/G3	1
Q105	J708167P2	TSTR NPN SI RF-PWR 23W G4/G5/G6	1
Q106	J707432P1	TSTR PNP SI BCX 18	1
Q107	J707386P1	TSTR NPN SI BCW 32	1
Q108	J708406P1	TSTR NPN SI BD 233	1
Q201	J707435P1	TSTR PNP SI BC 369	1
Q202	J707386P1	TSTR NPN SI BCW 32	1
Q203	J707432P1	TSTR PNP SI BCX 18	1
Q204	J707386P1	TSTR NPN SI BCW 32	1
Q301	J706011P2	TSTR NPN SI BFR 91A	1
Q302	J708315P1	TSTR JFET SI 2N5245	1
Q401	J707817P1	TSTR JFET SI J 309	1
Q402	J707817P1	TSTR JFET SI J 309	1
Q403	J707419P1	TSTR JFET SI BF511	1
Q404	J708418P1	TSTR NPN SI BFS 20	1
Q405	J708418P1	TSTR NPN SI BFS 20	1
Q406	J708418P1	TSTR NPN SI BFS 20	1
Q407	J707386P1	TSTR NPN SI BCW 32	1
Q408	J707387P1	TSTR PNP SI BCW 30	1
Q501	J707817P1	TSTR JFET SI J 309	1
Q502	J707388P1	TSTR NPN SI BFR 53	1
Q503	J707388P1	TSTR NPN SI BFR 53	1
Q504	J708318P1	TSTR PNP SI BFT 92	1
Q601	J707817P1	TSTR JFET SI J 309	1
Q602	J707388P1	TSTR NPN SI BFR 53	1
Q603	J707388P1	TSTR NPN SI BFR 53	1
Q604	J708318P1	TSTR PNP SI BFT 92	1
Q605	J707386P1	TSTR NPN SI BCW 32	1
Q606	J707386P1	TSTR NPN SI BCW 32	1
Q607	J707386P1	TSTR NPN SI BCW 32	1
Q608	J707433P1	TSTR MFET SI BF 989	1
Q609	J707419P1	TSTR JFET SI BF511	1
R000	J707385P332	RES MFLM 1/8W 3K3 5%	1
R100	J707385P152	RES MFLM 1/8W 1K5 5%	1
R101	J707385P562	RES MFLM 1/8W 5K6 5%	1

Pos	Code No	Description	Qt
R102	J707385P470	RES MFLM 1/8W 47R 5%	1
R103	J707385P152	RES MFLM 1/8W 1K5 5%	1
R104	J707385P562	RES MFLM 1/8W 5K6 5%	1
R105	J707385P270	RES MFLM 1/8W 27R 5%	1
R106	J707385P270	RES MFLM 1/8W 27R 5%	1
R107	J707385P102	RES MFLM 1/8W 1KO 5%	1
R108	J707385P100	RES MFLM 1/8W 10R 5%	1
R109	J707385P100	RES MFLM 1/8W 10R 5%	1
R110	J707385P947	RES MFLM 1/8W 4R7 20%	1
R111	J707385P102	RES MFLM 1/8W 1KO 5%	1
R112	J707385P270	RES MFLM 1/8W 27R 5%	1
R113	J707385P100	RES MFLM 1/8W 10R 5%G1/G2/G3	1
R114	J707385P100	RES MFLM 1/8W 10R 5%G1/G2/G3	1
R115	J707385P100	RES MFLM 1/8W 10R 5%	1
R116	J707385P100	RES MFLM 1/8W 10R 5%	1
R117	J707385P100	RES MFLM 1/8W 10R 5%	1
R119	J707385P473	RES MFLM 1/8W 47K 5%	1
R120	J707385P473	RES MFLM 1/8W 47K 5%	1
R121	J707385P221	RES MFLM 1/8W 220R 5% G1/G2/G3	1
R121	J707385P102	RES MFLM 1/8W 1KO 5% G4/G5/G6	1
R122	J707385P221	RES MFLM 1/8W 220R 5% G1/G2/G3	1
R122	J707385P102	RES MFLM 1/8W 1KO 5% G4/G5/G6	1
R123	J707385P220	RES MFLM 1/8W 22R 5%	1
R124	J707385P220	RES MFLM 1/8W 22R 5%	1
R125	J707385P391	RES MFLM 1/8W 390R 5% G1/G2/G3	1
R126	J707385P391	RES MFLM 1/8W 390R 5% G1/G2/G3	1
R127	J707385P101	RES MFLM 1/8W 100R 5% G1/G2/G3	1
R130	J707385P103	RES MFLM 1/8W 10K 5%	1
R131	J707385P472	RES MFLM 1/8W 4K7 5%	1
R131	J707385P683	RES MFLM 1/8W 68K 5% G1/G2/G3	1
R132	J708538P9	RES VAR CERM 200K 20%	1
R133	J708538P4	RES VAR CERM 5KO 20%	1
R134	J707385P100	RES MFLM 1/8W 10R 5%	1
R135	J706147P2	RES THERM PTC 80R 25%G1/G2/G3	1
R136	J707385P153	RES MFLM 1/8W 15K 5%G1/G2/G3	1
R136	J707385P101	RES MFLM 1/8W 100R 5%G4/G5/G6	1
R137	J707385P473	RES MFLM 1/8W 47K 5%	1
R138	J707385P333	RES MFLM 1/8W 33K 5%	1
R139	J707385P333	RES MFLM 1/8W 33K 5%	1
R140	J707385P104	RES MFLM 1/8W 100K 5%	1
R141	J707385P222	RES MFLM 1/8W 2K2 5%	1
R142	J707385P222	RES MFLM 1/8W 2K2 5%	1
R143	J707385P104	RES MFLM 1/8W 100K 5%	1
R144	J707385P682	RES MFLM 1/8W 6K8 5%	1
R145	J707385P473	RES MFLM 1/8W 47K 5%	1
R146	J707385P472	RES MFLM 1/8W 4K7 5%	1
R147	J707385P123	RES MFLM 1/8W 12K 5%	1
R148	J707385P331	RES MFLM 1/8W 330R 5%	1
R149	J707385P683	RES MFLM 1/8W 68K 5%	1
R150	J707385P104	RES MFLM 1/8W 100K 5%	1
R151	J707385P274	RES MFLM 1/8W 270K 5%	1
R152	J707385P562	RES MFLM 1/8W 5K6 5%	1
R153	J707385P222	RES MFLM 1/8W 2K2 5%	1
R154	J707385P102	RES MFLM 1/8W 1KO 5%	1
R155	J707385P472	RES MFLM 1/8W 4K7 5%	1
R201	J707385P561	RES MFLM 1/8W 560R 5%	1
R202	J707385P271	RES MFLM 1/8W 270R 5%	1
R203	J707385P153	RES MFLM 1/8W 15K 5%	1
R204	J707385P153	RES MFLM 1/8W 15K 5%	1
R205	J707385P472	RES MFLM 1/8W 4K7 5%	1
R206	J707385P272	RES MFLM 1/8W 2K7 5%	1
R207	J707385P563	RES MFLM 1/8W 56K 5%	1
R208	J707385P563	RES MFLM 1/8W 56K 5%	1
R209	J707385P271	RES MFLM 1/8W 270R 5%	1
R301	J707385P473	RES MFLM 1/8W 47K 5%	1
R302	J707385P221	RES MFLM 1/8W 220R 5%	1
R303	J707385P104	RES MFLM 1/8W 100K 5%	1
R304	J707385P104	RES MFLM 1/8W 100K 5%	1
R306	J707385P222	RES MFLM 1/8W 2K2 5%	1
R307	J707385P681	RES MFLM 1/8W 680R 5%	1
R308	J707385P560	RES MFLM 1/8W 56R 5%	1
R309	J707385P270	RES MFLM 1/8W 27R 5%	1
R310	J707385P104	RES MFLM 1/8W 100K 5%	1
R311	J707385P270	RES MFLM 1/8W 27R 5%	1
R312	J707385P104	RES MFLM 1/8W 100K 5%	1
R313	J707385P104	RES MFLM 1/8W 100K 5%	1
R314	J707385P104	RES MFLM 1/8W 100K 5%	1
R315	J707385P104	RES MFLM 1/8W 100K 5%	1
R316	J707385P104	RES MFLM 1/8W 100K 5%	1
R317	J707385P272	RES MFLM 1/8W 2K7 5%	1
R318	J707385P100	RES MFLM 1/8W 10R 5%	1
R319	J707385P101	RES MFLM 1/8W 100R 5%	1
R320	J707385P103	RES MFLM 1/8W 10K 5%	1

DATE: 10/ 3/1988

Pos	Code No	Description	Qt
R321	J707385P270	RES MFLM 1/8W 27R 5%	1
R322	J707385P104	RES MFLM 1/8W 100K 5%	1
R323	J707385P102	RES MFLM 1/8W 1K0 5%	1
R324	J707385P101	RES MFLM 1/8W 100R 5%	1
R401	J707385P560	RES MFLM 1/8W 56R 5%	1
R402	J707385P100	RES MFLM 1/8W 10R 5%	1
R403	J707385P332	RES MFLM 1/8W 3K3 5%	1
R405	J707385P100	RES MFLM 1/8W 10R 5%	1
R406	J707385P820	RES MFLM 1/8W 82R 5%	1
R407	J707385P470	RES MFLM 1/8W 47R 5%	1
R408	J707385P470	RES MFLM 1/8W 47R 5%	1
R410	J707385P272	RES MFLM 1/8W 2K7 5%	1
R411	J707385P682	RES MFLM 1/8W 6K8 5%	1
R412	J707385P272	RES MFLM 1/8W 2K7 5%	1
R413	J707385P821	RES MFLM 1/8W 820R 5%	1
R414	J707385P220	RES MFLM 1/8W 22R 5%	1
R415	J707385P222	RES MFLM 1/8W 2K2 5%	1
R416	J707385P562	RES MFLM 1/8W 5K6 5%	1
R417	J707385P103	RES MFLM 1/8W 10K 5%	1
R418	J707385P153	RES MFLM 1/8W 15K 5%	1
R419	J707385P182	RES MFLM 1/8W 1K8 5%	1
R420	J707385P182	RES MFLM 1/8W 1K8 5%	1
R421	J707385P182	RES MFLM 1/8W 1K8 5%	1
R422	J707385P473	RES MFLM 1/8W 47K 5%	1
R423	J707385P153	RES MFLM 1/8W 15K 5%	1
R424	J708538P5	RES VAR CERM 10K 20%	1
R425	J707385P272	RES MFLM 1/8W 2K7 5%	1
R426	J707385P333	RES MFLM 1/8W 33K 5% G1/G4	1
R426	J707385P473	RES MFLM 1/8W 47K 5% G2/G3/G5/G6	1
R427	J707385P473	RES MFLM 1/8W 47K 5% G1/G3/G4/G6	1
R427	J707385P393	RES MFLM 1/8W 39K 5% G2/G5	1
R428	J707385P393	RES MFLM 1/8W 39K 5% G1/G4	1
R428	J707385P563	RES MFLM 1/8W 56K 5% G2/G3/G5/G6	1
R429	J707385P104	RES MFLM 1/8W 100K 5%	1
R430	J707385P334	RES MFLM 1/8W 330K 5%	1
R431	J707385P473	RES MFLM 1/8W 47K 5%	1
R432	J707385P473	RES MFLM 1/8W 47K 5%	1
R433	J707385P271	RES MFLM 1/8W 270R 5%	1
R434	J707385P102	RES MFLM 1/8W 1K0 5%	1
R435	J706147P3	RES THERM PTC 250R 25%	1
R436	J707385P392	RES MFLM 1/8W 3K9 5%	1
R437	J707406P7	RES THERM NTC 220R 10%	1
R438	J707385P222	RES MFLM 1/8W 2K2 5%	1
R439	J707385P392	RES MFLM 1/8W 3K9 5%	1
R440	J707385P392	RES MFLM 1/8W 3K9 5%	1
R441	J707385P101	RES MFLM 1/8W 100R 5%	1
R442	J708538P6	RES VAR CERM 20K 20%	1
R444	J707385P473	RES MFLM 1/8W 47K 5%	1
R445	J707385P273	RES MFLM 1/8W 27K 5%	1
R446	J707385P224	RES MFLM 1/8W 220K 5%	1
R447	J707385P392	RES MFLM 1/8W 3K9 5%	1
R448	J707385P101	RES MFLM 1/8W 100R 5%	1
R449	J707385P470	RES MFLM 1/8W 47R 5%	1
R450	J707385P103	RES MFLM 1/8W 10K 5%	1
R451	J707385P332	RES MFLM 1/8W 3K3 5%	1
R501	J707385P122	RES MFLM 1/8W 1K2 5%	1
R502	J707385P122	RES MFLM 1/8W 1K2 5%	1
R503	J707385P122	RES MFLM 1/8W 1K2 5%	1
R504	J707385P104	RES MFLM 1/8W 100K 5%	1
R505	J707385P104	RES MFLM 1/8W 100K 5%	1
R506	J707385P104	RES MFLM 1/8W 100K 5%	1
R508	J707385P103	RES MFLM 1/8W 10K 5%	1
R509	J707385P100	RES MFLM 1/8W 10R 5%	1
R510	J707385P332	RES MFLM 1/8W 3K3 5%	1
R512	J707385P561	RES MFLM 1/8W 560R 5%	1
R513	J707385P183	RES MFLM 1/8W 18K 5%	1
R514	J707385P472	RES MFLM 1/8W 4K7 5%	1
R515	J707385P271	RES MFLM 1/8W 270R 5%	1
R517	J707385P101	RES MFLM 1/8W 100R 5%	1
R520	J707385P682	RES MFLM 1/8W 6K8 5%	1
R521	J707385P152	RES MFLM 1/8W 1K5 5%	1
R522	J707385P680	RES MFLM 1/8W 68R 5%	1
R523	J707385P222	RES MFLM 1/8W 2K2 5%	1
R524	J707385P472	RES MFLM 1/8W 4K7 5%	1
R525	J707385P680	RES MFLM 1/8W 68R 5%	1
R526	J707385P104	RES MFLM 1/8W 100K 5%	1
R527	J707385P104	RES MFLM 1/8W 100K 5%	1
R528	J707385P103	RES MFLM 1/8W 10K 5%	1
R529	J707385P150	RES MFLM 1/8W 15R 5%	1
R530	J707385P182	RES MFLM 1/8W 1K8 5%	1
R531	J707385P682	RES MFLM 1/8W 6K8 5%	1
R532	J707385P392	RES MFLM 1/8W 3K9 5%	1
R601	J707385P122	RES MFLM 1/8W 1K2 5%	1

Pos	Code No	Description	Qt
R602	J707385P122	RES MFLM 1/8W 1K2 5%	1
R603	J707385P122	RES MFLM 1/8W 1K2 5%	1
R604	J707385P104	RES MFLM 1/8W 100K 5%	1
R605	J707385P104	RES MFLM 1/8W 100K 5%	1
R606	J707385P104	RES MFLM 1/8W 100K 5%	1
R607	J707385P183	RES MFLM 1/8W 18K 5%	1
R608	J707385P271	RES MFLM 1/8W 270R 5%	1
R609	J707385P223	RES MFLM 1/8W 22K 5%	1
R610	J707385P101	RES MFLM 1/8W 100R 5%	1
R611	J707385P682	RES MFLM 1/8W 6K8 5%	1
R612	J707385P222	RES MFLM 1/8W 2K2 5%	1
R613	J707385P101	RES MFLM 1/8W 100R 5%	1
R614	J707385P101	RES MFLM 1/8W 100R 5%	1
R615	J707385P102	RES MFLM 1/8W 1K0 5%	1
R616	J707385P102	RES MFLM 1/8W 1K0 5%	1
R617	J707385P272	RES MFLM 1/8W 2K7 5%	1
R618	J707385P330	RES MFLM 1/8W 33R 5%	1
R619	J707385P102	RES MFLM 1/8W 1K0 5%	1
R620	J707385P123	RES MFLM 1/8W 12K 5%	1
R621	J707385P223	RES MFLM 1/8W 22K 5%	1
R622	J707385P470	RES MFLM 1/8W 47R 5%	1
R623	J707385P100	RES MFLM 1/8W 10R 5%	1
R624	J707385P103	RES MFLM 1/8W 10K 5%	1
R625	J707385P224	RES MFLM 1/8W 220K 5%	1
R626	J707385P393	RES MFLM 1/8W 39K 5%	1
R627	J707385P103	RES MFLM 1/8W 10K 5%	1
R628	J707385P100	RES MFLM 1/8W 10R 5%	1
R629	J707385P823	RES MFLM 1/8W 82K 5% G3/G6	1
R629	J707385P393	RES MFLM 1/8W 39K 5% G1/G2/G4/G5	1
R630	J707385P223	RES MFLM 1/8W 22K 5%	1
R631	J707385P470	RES MFLM 1/8W 47R 5% G1/G2/G4/G5	1
R632	J707385P102	RES MFLM 1/8W 1K0 5%	1
R633	J707385P332	RES MFLM 1/8W 3K3 5%	1
R634	J707385P181	RES MFLM 1/8W 180R 5%	1
R635	J707385P154	RES MFLM 1/8W 150K 5%	1
R636	J707385P332	RES MFLM 1/8W 3K3 5%	1
R637	J707385P682	RES MFLM 1/8W 6K8 5%	1
R638	J707385P154	RES MFLM 1/8W 150K 5% G1/G2/G4/G5	1
R638	J707385P823	RES MFLM 1/8W 82K 5% G3/G6	1
R639	J707385P682	RES MFLM 1/8W 6K8 5% G1/G2/G4/G6	1
R639	J707385P822	RES MFLM 1/8W 8K2 5% G3/G6	1
R640	J707385P105	RES MFLM 1/8W 1M0 10%	1
R641	J707385P224	RES MFLM 1/8W 220K 5%	1
R642	J707385P103	RES MFLM 1/8W 10K 5%	1
R643	J707385P472	RES MFLM 1/8W 4K7 5%	1
R644	J707385P333	RES MFLM 1/8W 33K 5%	1
R645	J707385P683	RES MFLM 1/8W 68K 5%	1
R646	J707385P104	RES MFLM 1/8W 100K 5%	1
R647	J707385P223	RES MFLM 1/8W 22K 5%	1
R648	J707385P104	RES MFLM 1/8W 100K 5%	1
R649	J707385P472	RES MFLM 1/8W 4K7 5%	1
R650	J707385P333	RES MFLM 1/8W 33K 5%	1
R651	J707385P562	RES MFLM 1/8W 5K6 5%	1
R652	J707385P183	RES MFLM 1/8W 18K 5%	1
R653	J707385P393	RES MFLM 1/8W 39K 5%	1
R654	J707385P823	RES MFLM 1/8W 82K 5%	1
R655	J707385P154	RES MFLM 1/8W 150K 5%	1
R656	J707385P102	RES MFLM 1/8W 1K0 5%	1
R657	J707385P333	RES MFLM 1/8W 33K 5%	1
R658	J707385P473	RES MFLM 1/8W 47K 5%	1
R659	J707385P393	RES MFLM 1/8W 39K 5%	1
R660	J708538P5	RES VAR CERM 10K 20%	1
R661	J707385P333	RES MFLM 1/8W 33K 5%	1
R662	J707385P824	RES MFLM 1/8W 820K 5%	1
R663	J707385P124	RES MFLM 1/8W 120K 5%	1
R664	J707385P124	RES MFLM 1/8W 120K 5%	1
R665	J707385P122	RES MFLM 1/8W 1K2 5%	1
R666	J707385P221	RES MFLM 1/8W 220R 5%	1
R667	J707385P103	RES MFLM 1/8W 10K 5%	1
R668	J707385P562	RES MFLM 1/8W 5K6 5%	1
R669	J707385P822	RES MFLM 1/8W 8K2 5%	1
R670	J707385P822	RES MFLM 1/8W 8K2 5%	1
R671	J707385P101	RES MFLM 1/8W 100R 5%	1
R672	J708538P5	RES VAR CERM 10K 20%	1
R673	J707385P123	RES MFLM 1/8W 12K 5%	1
R674	J708538P5	RES VAR CERM 10K 20%	1
R675	J707385P821	RES MFLM 1/8W 820R 5%	1
R676	J707385P683	RES MFLM 1/8W 68K 5%	1
R677	J708538P5	RES VAR CERM 10K 20%	1
R678	J707385P683	RES MFLM 1/8W 68K 5%	1
R679	J707385P561	RES MFLM 1/8W 560R 5%	1
R680	J707385P271	RES MFLM 1/8W 270R 5%	1
R681	J707385P683	RES MFLM 1/8W 68K 5%	1

Pos	Code No	Description	Qt
R682	J707385P561	RES MFLM 1/8W 560R 5%	1
R683	J707385P271	RES MFLM 1/8W 270R 5%	1
R684	J707385P105	RES MFLM 1/8W 1MO 10%	1
R685	J707385P183	RES MFLM 1/8W 18K 5%	1
R686	J707385P103	RES MFLM 1/8W 10K 5%	1
R687	J707385P183	RES MFLM 1/8W 18K 5%	1
R688	J707385P103	RES MFLM 1/8W 10K 5%	1
R689	J707385P124	RES MFLM 1/8W 120K 5%	1
R690	J707385P152	RES MFLM 1/8W 1K5 5%	1
R691	J707385P223	RES MFLM 1/8W 22K 5%	1
R692	J707385P105	RES MFLM 1/8W 1MO 10%	1
R693	J707385P223	RES MFLM 1/8W 22K 5%	1
R694	J707385P223	RES MFLM 1/8W 22K 5%	1
R695	J707385P105	RES MFLM 1/8W 1MO 10%	1
R696	J707385P223	RES MFLM 1/8W 22K 5%	1
R697	J707385P223	RES MFLM 1/8W 22K 5%	1
R698	J707385P105	RES MFLM 1/8W 1MO 10%	1
R699	J707385P273	RES MFLM 1/8W 27K 5%	1
R700	J707385P103	RES MFLM 1/8W 10K 5%	1
R701	J707385P824	RES MFLM 1/8W 820K 5%	1
R702	J707385P824	RES MFLM 1/8W 820K 5%	1
R703	J707385P154	RES MFLM 1/8W 150K 5%	1
R704	J707385P561	RES MFLM 1/8W 560R 5%	1
R705	J707385P122	RES MFLM 1/8W 1K2 5%	1
R706	J707385P561	RES MFLM 1/8W 560R 5%	1
U100	J708165P2	IC LIN OP-AMP 324	1
U201	J708333P1	IC LIN VR FIX 4785	1
U401	J707449P1	IC LIN IF-AMP 3357	1
U402	M905766G1	INT CKT SQ 4002 G1/G2/G4/G5	1
U402	M905766G2	INT CKT SQ 4003 G3/G6	1
U601	J707859P1	IC LIN OP-AMP 204	1
U602	J707859P1	IC LIN OP-AMP 204	1
U603	J707859P1	IC LIN OP-AMP 204	1
U604	J707859P1	IC LIN OP-AMP 204	1
U606	J707243P1	IC DIG REG 4094	1
U607	J707374P3	IC PLL PRESC 12017 G1/G2/G4/G5	1
U607	J707374P4	IC PLL PRESC 12018 G3/G6	1
U608	B800902P1	IC PLL SYN CUSTOM DES	1
U609	J707859P1	IC LIN OP-AMP 204	1
U610	J708503P2	IC LIN CMPAR LM 339	1
U615	J708621P2	CPLR OPTO PC 827	1
U616	J708503P2	IC LIN CMPAR LM 339	1
W004	J706451P1	WIRE STRAP	1
W1	A700184P1	RES WIRE JMPR OR JUMPER	1
W3	J707256P1	COIL FIX	1
W5	J708717P1	STRAP	1
W6	J708716P1	STRAP G1/G2/G3	1
Y401	J708426P1	CRYSTAL UNIT 44.5450MHZ	1
Z401	J708330P1	FLTR CRY 45.0 +/-7.5KHZ G1/G4	1
Z401	J708330P2	FLTR CRY 45.0 +/-7.5KHZ G2/G5	1
Z401	J708330P3	FLTR CRY 45.0 +/-7.5KHZ G3/G6	1
Z402	J707446P1	FLTR CER 455K +/-10KHZ G1/G4	1
Z402	J707446P3	FLTR CER 455K +/-10KHZ G2/G5	1
Z402	J707446P4	FLTR CER 455K +/-10KHZ G3/G6	1
Z403	J707446P1	FLTR CER 455K +/-10KHZ G1/G4	1
Z403	J707446P3	FLTR CER 455K +/-10KHZ G2/G5	1
Z403	J707446P4	FLTR CER 455K +/-10KHZ G3/G6	1
	M905780P1R0	BD PW G1/G2/G3	1
	M905780P2R0	BD PW G4/G5/G6	1
		NON ELECTRONICAL PARTS	
	K805569G1	SHIELD METALLIZED	1
	J708966G1	HEAT SINK MODF	1
	J708561P3	COIL FIXED	1
	J708561P3	COIL FIXED	1

Pos	Code No	Description	Qt

DATE: 5/18/1988

Pos	Code No	Description	Qt
C100	J707436P13	CAP CER NPO 10P 5%	1
C101	J707436P21	CAP CER NPO 15P 5%	1
C102	J707438P14	CAP CER CL2 10N 10%	1
C103	J707436P8	CAP CER NPO 3P9 .25P	1
C104	J707436P8	CAP CER NPO 3P9 .25P	1
C105	J707436P33	CAP CER NPO 27P 5%	1
C107	J707436P61	CAP CER NPO 100P 5%	1
C108	J707436P21	CAP CER NPO 15P 5%	1
C109	J707436P33	CAP CER NPO 27P 5%	1
C110	J707436P41	CAP CER NPO 39P 5%	1
C111	J707438P14	CAP CER CL2 10N 10%	1
C112	J707436P61	CAP CER NPO 100P 5%	1
C113	J707436P33	CAP CER NPO 27P 5%	1
C114	J707809P13	CAP CER NPO 10P 5%	1
C115	J707809P18	CAP CER NPO 27P 5%	1
C116	J707809P20	CAP CER NPO 39P 5%	1
C117	J707809P25	CAP CER NPO 100P 5%	1
C118	J707438P8	CAP CER CL2 3N3 10%	1
C119	J707809P25	CAP CER NPO 100P 5% G1/G2/G3	1
C120	J707809P21	CAP CER NPO 47P 5%	1
C121	A700006P19	CAP MICA 27P 5% G1/G2/G3	1
C122	A700006P19	CAP MICA 27P 5% G1/G2/G3	1
C123	J707809P25	CAP CER NPO 100P 5% G1/G2/G3	1
C124	J707438P14	CAP CER CL2 10N 10% G1/G2/G3	1
C126	A700006P11	CAP MICA 15P 5% G1/G2/G3	1
C127	A700006P11	CAP MICA 15P 5% G1/G2/G3	1
C128	J707809P14	CAP CER NPO 12P 5% G1/G2/G3	1
C128	J707809P13	CAP CER NPO 10P 5% G4/G5/G6	1
C129	J707809P14	CAP CER NPO 12P 5% G1/G2/G3	1
C129	J707809P13	CAP CER NPO 10P 5% G4/G5/G6	1
C130	A700006P19	CAP MICA 27P 5%	1
C131	A700006P19	CAP MICA 27P 5%	1
C132	J707809P27	CAP CER NPO 150P 5%	1
C133	J707438P14	CAP CER CL2 10N 10%	1
C134	A700006P26	CAP MICA 47P 5% G1/G2/G3	1
C134	A700006P28	CAP MICA 56P 5% G4/G5/G6	1
C135	A700006P26	CAP MICA 47P 5% G1/G2/G3	1

Pos	Code No	Description	Qt
C135	A700006P28	CAP MICA 56P 5% G4/G5/G6	1
C136	A700006P14	CAP MICA 18P 5%	1
C137	J707353P6	CAP ELECT 4U7 25V	1
C138	J707438P22	CAP CER CL2 47N 10%	1
C139	J707809P25	CAP CER NPO 100P 5%	1
C140	J707809P25	CAP CER NPO 100P 5%	1
C141	J707809P25	CAP CER NPO 100P 5%	1
C142	J707809P25	CAP CER NPO 100P 5%	1
C143	J707809P25	CAP CER NPO 100P 5%	1
C144	J707809P25	CAP CER NPO 100P 5%	1
C145	J707809P25	CAP CER NPO 100P 5%	1
C146	A700006P4	CAP PTFE 8P2 10%	1
C147	A700006P11	CAP MICA 15P 5%	1
C148	A700006P11	CAP MICA 15P 5%	1
C149	A700006P3	CAP PTFE 6P8 10%	1
C150	J707809P8	CAP CER NPO 3P9 .25P	1
C151	J707438P8	CAP CER CL2 3N3 10%	1
C152	J707436P61	CAP CER NPO 100P 5%	1
C153	J707809P1	CAP CER NPO 1P0 .25P	1
C154	J707809P1	CAP CER NPO 1P0 .25P	1
C155	J707809P25	CAP CER NPO 100P 5%	1
C160	J707436P61	CAP CER NPO 100P 5%	1
C161	J707436P61	CAP CER NPO 100P 5%	1
C162	J707353P3	CAP ELECT 0U47 50V	1
C163	J707436P61	CAP CER NPO 100P 5%	1
C164	J707438P20	CAP CER CL2 33N 10%	1
C165	J707438P14	CAP CER CL2 10N 10%	1
C166	J707436P61	CAP CER NPO 100P 5%	1
C167	J707436P61	CAP CER NPO 100P 5%	1
C168	J707438P14	CAP CER CL2 10N 10%	1
C169	J707438P26	CAP CER CL2 100N 10%	1
C170	J707436P61	CAP CER NPO 100P 5%	1
C171	J707436P61	CAP CER NPO 100P 5%	1
C201	J707438P26	CAP CER CL2 100N 10%	1
C202	J707444P8	CAP TA SOL 22U 16V	1
C203	J707444P6	CAP TA SOL 4U7 35V	1
C204	J707438P3	CAP CER CL2 470P 10%	1

DATE: 5/18/1988

Pos	Code No	Description	Qt
C301	J707809P25	CAP CER NPO 100P 5%	1
C302	J707809P15	CAP CER NPO 15P 5%	1
C303	J707809P15	CAP CER NPO 15P 5%	1
C304	J708287P1	CAP VAR CER 3.3/8 PF	1
C305	J707436P10	CAP CER NPO 5P6 .25P	1
C306	J707483P6	CAP PHEN 0P82 5%	1
C307	J707436P61	CAP CER NPO 100P 5%	1
C308	J707436P11	CAP CER NPO 6P8 .25P	1
C309	J708287P1	CAP VAR CER 3.3/8 PF	1
C310	J707438P3	CAP CER CL2 470P 10%	1
C311	J707436P37	CAP CER NPO 33P 5%	1
C312	J707436P69	CAP CER NPO 220P 5%	1
C313	J707438P3	CAP CER CL2 470P 10%	1
C314	J707436P5	CAP CER NPO 2P2 .25P	1
C315	J707436P12	CAP CER NPO 8P2 .25P	1
C316	J708287P1	CAP VAR CER 3.3/8 PF	1
C317	J707444P2	CAP TA SOL 0U22 35V	1
C318	J707438P3	CAP CER CL2 470P 10%	1
C319	J707436P11	CAP CER NPO 6P8 .25P	1
C320	J707438P3	CAP CER CL2 470P 10%	1
C321	J708287P1	CAP VAR CER 3.3/8 PF	1
C322	J707483P4	CAP PHEN 0P56 5%	1
C323	J707483P4	CAP PHEN 0P56 5%	1
C324	J707436P11	CAP CER NPO 6P8 .25P	1
C325	J707438P3	CAP CER CL2 470P 10%	1
C326	J708287P1	CAP VAR CER 3.3/8 PF	1
C327	J707436P11	CAP CER NPO 6P8 .25P	1
C328	J707483P1	CAP PHEN 0P47 5%	1
C329	J707436P10	CAP CER NPO 5P6 .25P	1
C330	J708287P1	CAP VAR CER 3.3/8 PF	1
C331	J707436P6	CAP CER NPO 2P7 .25P	1
C332	J708287P1	CAP VAR CER 3.3/8 PF	1
C333	J707436P12	CAP CER NPO 8P2 .25P	1
C334	J707483P2	CAP PHEN 0P33 5%	1
C335	J707438P3	CAP CER CL2 470P 10%	1
C336	J708287P1	CAP VAR CER 3.3/8 PF	1
C337	J707436P12	CAP CER NPO 8P2 .25P	1

Pos	Code No	Description	Qt
C338	J707436P11	CAP CER NPO 6P8 .25P	1
C339	J707438P14	CAP CER CL2 10N 10%	1
C340	J707438P14	CAP CER CL2 10N 10%	1
C341	J707438P3	CAP CER CL2 470P 10%	1
C342	J708287P1	CAP VAR CER 3.3/8 PF	1
C343	J707436P13	CAP CER NPO 10P 5%	1
C344	J707438P3	CAP CER CL2 470P 10%	1
C345	J707436P37	CAP CER NPO 33P 5%	1
C347	J707438P3	CAP CER CL2 470P 10%	1
C348	J707438P3	CAP CER CL2 470P 10%	1
C349	J707436P4	CAP CER NPO 1P8 .25P	1
C350	J707438P3	CAP CER CL2 470P 10%	1
C401	J707438P8	CAP CER CL2 3N3 10%	1
C402	J707438P8	CAP CER CL2 3N3 10%	1
C403	J707438P8	CAP CER CL2 3N3 10%	1
C404	J707436P9	CAP CER NPO 4P7 .25P	1
C405	J707438P26	CAP CER CL2 100N 10%	1
C406	J707436P10	CAP CER NPO 5P6 .25P	1
C407	J707436P9	CAP CER NPO 4P7 .25P	1
C408	J707438P5	CAP CER CL2 1N 10%	1
C409	J707438P8	CAP CER CL2 3N3 10%	1
C410	J707444P8	CAP TA SOL 22U 16V	1
C411	J707438P26	CAP CER CL2 100N 10%	1
C412	J707438P26	CAP CER CL2 100N 10%	1
C413	J707436P21	CAP CER NPO 15P 5%	1
C414	J707438P8	CAP CER CL2 3N3 10%	1
C415	J707438P8	CAP CER CL2 3N3 10%	1
C416	J708702P16	CAP CER N750 18P 5%	1
C417	J707436P49	CAP CER NPO 56P 5%	1
C418	J707438P14	CAP CER CL2 10N 10%	1
C419	J707438P26	CAP CER CL2 100N 10%	1
C420	J707438P14	CAP CER CL2 10N 10%	1
C421	J707438P26	CAP CER CL2 100N 10%	1
C422	J707438P26	CAP CER CL2 100N 10%	1
C423	J707436P13	CAP CER NPO 10P 5%	1
C424	J707438P8	CAP CER CL2 3N3 10%	1
C425	J707412P13	CAP PYES 470N 10%	1

Pos	Code No	Description	Qt
C426	J707436P93	CAP CER NPO 2N2 5%	1
C427	J707436P73	CAP CER NPO 330P 5%	1
C428	J707436P73	CAP CER NPO 330P 5%	1
C429	J707438P14	CAP CER CL2 10N 10%	1
C430	J707444P8	CAP TA SOL 22U 16V	1
C431	J707444P8	CAP TA SOL 22U 16V	1
C432	J707438P26	CAP CER CL2 100N 10%	1
C433	J707438P26	CAP CER CL2 100N 10%	1
C434	J707438P8	CAP CER CL2 3N3 10%	1
C435	J707436P1	CAP CER NPO 1P0 .25P	1
C436	J707438P26	CAP CER CL2 100N 10%	1
C501	J707412P11	CAP PYES 220N 10%	1
C502	J707412P11	CAP PYES 220N 10%	1
C503	J707412P11	CAP PYES 220N 10%	1
C504	A700235P3	CAP CER N150 1P5 .25P	1
C505	A700235P3	CAP CER N150 1P5 .25P	1
C506	A700235P6	CAP CER N150 2P7 .25P	1
C507	A700235P5	CAP CER N150 2P2 .25P	1
C508	A700235P10	CAP CER N150 5P6 .25P	1
C509	A700235P12	CAP CER N150 8P2 .25P	1
C510	A700235P9	CAP CER N150 4P7 .25P	1
C512	J707483P7	CAP PHEN 1P00 5%	1
C513	J707438P3	CAP CER CL2 470P 10%	1
C515	J707436P9	CAP CER NPO 4P7 .25P	1
C516	J707436P7	CAP CER NPO 3P3 .25P	1
C517	J707444P6	CAP TA SOL 4U7 35V	1
C518	J707436P6	CAP CER NPO 2P7 .25P	1
C519	J707438P3	CAP CER CL2 470P 10%	1
C520	J707436P8	CAP CER NPO 3P9 .25P	1
C521	J707436P9	CAP CER NPO 4P7 .25P	1
C522	J707438P3	CAP CER CL2 470P 10%	1
C523	J707436P5	CAP CER NPO 2P2 .25P	1
C525	J707438P3	CAP CER CL2 470P 10%	1
C526	J707436P17	CAP CER NPO 12P 5%	1
C527	J707438P3	CAP CER CL2 470P 10%	1
C528	J707436P65	CAP CER NPO 150P 5%	1
C529	J708287P1	CAP VAR CER 3.3/8 PF	1

Pos	Code No	Description	Qt
C530	J707436P10	CAP CER NPO 5P6 .25P	1
C531	J707483P7	CAP PHEN 1P00 5%	1
C532	J707436P10	CAP CER NPO 5P6 .25P	1
C533	J708287P1	CAP VAR CER 3.3/8 PF	1
C534	J707436P7	CAP CER NPO 3P3 .25P	1
C535	J707436P7	CAP CER NPO 3P3 .25P	1
C536	J707438P3	CAP CER CL2 470P 10%	1
C537	J707438P3	CAP CER CL2 470P 10%	1
C538	J707438P3	CAP CER CL2 470P 10%	1
C539	J707438P3	CAP CER CL2 470P 10%	1
C540	J707438P3	CAP CER CL2 470P 10%	1
C541	J707438P3	CAP CER CL2 470P 10%	1
C542	J707438P3	CAP CER CL2 470P 10%	1
C543	J707438P3	CAP CER CL2 470P 10%	1
C544	J707438P3	CAP CER CL2 470P 10%	1
C545	J707438P3	CAP CER CL2 470P 10%	1
C601	J707412P11	CAP PYES 220N 10%	1
C602	J707412P11	CAP PYES 220N 10%	1
C603	J707412P11	CAP PYES 220N 10%	1
C604	A700235P5	CAP CER N150 2P2 .25P	1
C605	A700235P3	CAP CER N150 1P5 .25P	1
C606	A700235P8	CAP CER N150 3P9 .25P	1
C607	A700235P9	CAP CER N150 4P7 .25P	1
C608	A700235P12	CAP CER N150 8P2 .25P	1
C609	A700235P33	CAP CER N150 13P 5%	1
C610	A700235P12	CAP CER N150 8P2 .25P	1
C611	J707436P7	CAP CER NPO 3P3 .25P	1
C612	J707436P9	CAP CER NPO 4P7 .25P	1
C613	J707444P6	CAP TA SOL 4U7 35V	1
C614	J707436P6	CAP CER NPO 2P7 .25P	1
C615	J707436P77	CAP CER NPO 470P 5%	1
C616	J707438P3	CAP CER CL2 470P 10%	1
C617	J707436P7	CAP CER NPO 3P3 .25P	1
C618	J707436P9	CAP CER NPO 4P7 .25P	1
C619	J707438P3	CAP CER CL2 470P 10%	1
C620	J707436P1	CAP CER NPO 1P0 .25P	1
C621	J707438P3	CAP CER CL2 470P 10%	1

Pos	Code No	Description	Qt
C622	J707438P3	CAP CER CL2 470P 10%	1
C623	J707438P3	CAP CER CL2 470P 10%	1
C624	J707436P65	CAP CER NPO 150P 5%	1
C625	J707436P29	CAP CER NPO 22P 5%	1
C626	J707438P5	CAP CER CL2 1N 10%	1
C627	J707438P14	CAP CER CL2 10N 10%	1
C628	J707436P89	CAP CER NPO 1N5 5%	1
C629	J707436P65	CAP CER NPO 150P 5%	1
C630	J707438P26	CAP CER CL2 100N 10%	1
C632	J707438P26	CAP CER CL2 100N 10%	1
C633	J707444P17	CAP TA SOL 47U 10V	1
C634	J707438P26	CAP CER CL2 100N 10%	1
C635	J707438P3	CAP CER CL2 470P 10%	1
C636	J707444P17	CAP TA SOL 47U 10V	1
C637	J707438P26	CAP CER CL2 100N 10%	1
C639	J707438P8	CAP CER CL2 3N3 10%	1
C640	J707412P9	CAP PYES 100N 10%	1
C641	J707412P13	CAP PYES 470N 10%	1
C642	J707412P13	CAP PYES 470N 10%	1
C643	J707438P22	CAP CER CL2 47N 10%	1
C644	J707436P6	CAP CER NPO 2P7 .25P	1
C645	J707436P69	CAP CER NPO 220P 5%	1
C647	J707436P13	CAP CER NPO 10P 5%	1
C648	J707436P69	CAP CER NPO 220P 5%	1
C653	J707444P6	CAP TA SOL 4U7 35V	1
C656	J707436P77	CAP CER NPO 470P 5%	1
C657	J707438P3	CAP CER CL2 470P 10%	1
C658	J707438P14	CAP CER CL2 10N 10%	1
C659	J707438P5	CAP CER CL2 1N 10%	1
C660	J707438P3	CAP CER CL2 470P 10%	1
C661	J707438P3	CAP CER CL2 470P 10%	1
C662	J707438P3	CAP CER CL2 470P 10%	1
C663	J707438P3	CAP CER CL2 470P 10%	1
C664	J707438P26	CAP CER CL2 100N 10%	1
C665	J707438P3	CAP CER CL2 470P 10%	1
C666	J707438P3	CAP CER CL2 470P 10%	1
C667	J707438P3	CAP CER CL2 470P 10%	1

Pos	Code No	Description	Qt
C668	J707438P12	CAP CER CL2 6N8 5%	1
C669	J707436P61	CAP CER NPO 100P 5%	1
C670	J707436P17	CAP CER NPO 12P 5%	1
C671	J707438P26	CAP CER CL2 100N 10%	1
D100	J706892P2	DIO SI PIN UM 9678	1
D101	A700047P3	DIO SI SIG 1N6263	1
D102	J707390P1	DIO SI SIG BAV 74	1
D301	J706892P2	DIO SI PIN UM 9678	1
D302	J706007P1	DIO SI CAP BB505B	1
D303	J706007P1	DIO SI CAP BB505B	1
D304	A700047P3	DIO SI SIG 1N6263	1
D305	J706007P1	DIO SI CAP BB505B	1
D306	J706007P1	DIO SI CAP BB505B	1
D307	J706007P1	DIO SI CAP BB505B	1
D308	J706007P1	DIO SI CAP BB505B	1
D309	J706007P1	DIO SI CAP BB505B	1
D310	J706007P1	DIO SI CAP BB505B	1
D311	J706007P1	DIO SI CAP BB505B	1
D401	A700025P8	DIO SI ZENR 6V8 5% 0.4W	1
D501	J706007P1	DIO SI CAP BB505B	1
D502	J706007P1	DIO SI CAP BB505B	1
D503	J706007P1	DIO SI CAP BB505B	1
D504	J706007P1	DIO SI CAP BB505B	1
D505	J707769P2	DIO SI CAP BBY 31	1
D506	J707390P1	DIO SI SIG BAV'74	1
D507	J707769P1	DIO SI CAP BBY 31	1
D508	J707769P1	DIO SI CAP BBY 31	1
D601	J706007P1	DIO SI CAP BB505B	1
D602	J706007P1	DIO SI CAP BB505B	1
D603	J706007P1	DIO SI CAP BB505B	1
D604	J706007P1	DIO SI CAP BB505B	1
D605	J707390P1	DIO SI SIG BAV 74	1
D606	J708681P1	DIO SI SIG BAW 56	1
D607	J707390P1	DIO SI SIG BAV 74	1
D608	J707390P1	DIO SI SIG BAV 74	1
D610	J708681P1	DIO SI SIG BAW 56	1
D611	J707389P1	DIO SI SIG BAV 99	1

Pos	Code No	Description	Qt
L100	K805653G2	COIL ASM 2 1/2T	1
L101	A700024P1	COIL RF FIX 0.1UH 10%	1
L102	K805653G2	COIL ASM 2 1/2T	1
L103	J707256P2	COIL FIX	1
L104	K805653G2	COIL ASM 2 1/2T	1
L105	J707256P2	COIL FIX	1
L106	K805653G1	COIL ASM 1 1/2T	1
L107	A701237P1	COIL	1
L108	J707339G1	COIL FIX ASM	1
L109	A700024P1	COIL RF FIX 0.1UH 10% G1/G2/G3	1
L110	J707339G1	COIL FIX ASM G1/G2/G3	1
L111	A701237P1	COIL G1/G2/G3	1
L112	J709287P1	CORE TOR FERR	1
L113	A700024P1	COIL RF FIX 0.1UH 10%	1
L114	J707339G1	COIL FIX ASM	1
L115	A701237P1	COIL G1/G2/G3	1
L115	A701237P3	COIL FIX G4/G5/G6	1
L116	J708561P4	COIL FIXED	1
L117	A700024P3	COIL RF FIX 0.15UH 10%	1
L118	J709603P1	COIL	1
L119	J709603P1	COIL	1
L120	J709603P1	COIL	1
L121	A700024P25	COIL RF FIX 10UH 10%	1
L122	A700024P25	COIL RF FIX 10UH 10%	1
L123	J709287P1	CORE TOR FERR	1
L301	J707256P2	COIL FIX	1
L302	J707256P2	COIL FIX	1
L303	K805627G1	COIL RF FIXED 1 1/2T	1
L304	K805627G1	COIL RF FIXED 1 1/2T	1
L305	J707486P11	COIL RF FIX 2.2UH 10%	1
L306	K805627G1	COIL RF FIXED 1 1/2T	1
L307	K805627G1	COIL RF FIXED 1 1/2T	1
L308	K805627G1	COIL RF FIXED 1 1/2T	1
L309	K805627G1	COIL RF FIXED 1 1/2T	1
L311	K805627G1	COIL RF FIXED 1 1/2T	1
L312	J708428P2	COIL RF VAR 45 MHZ	1
L401	J707486P10	COIL RF FIX 1.5UH 10%	1

Pos	Code No	Description	Qt
L403	K805570G2	COIL ASM	1
L404	K805570G1	COIL ASM	1
L405	J708428P1	COIL RF VAR 45 MHZ	1
L406	K805570G3	COIL ASM	1
L407	A700024P25	COIL RF FIX 10UH 10%	1
L408	J708428P2	COIL RF VAR 45 MHZ	1
L409	J707431P1	COIL RF VAR 455KHZ 25%	1
L410	J707431P1	COIL RF VAR 455KHZ 25%	1
L501	A700024P13	COIL RF FIX 1.0UH 10%	1
L502	A700024P13	COIL RF FIX 1.0UH 10%	1
L503	A700024P13	COIL RF FIX 1.0UH 10%	1
L504	A700024P13	COIL RF FIX 1.0UH 10%	1
L505	L855671P1	COIL RADIO FREQUENCY	1
L506	A700024P13	COIL RF FIX 1.0UH 10%	1
L507	A700024P13	COIL RF FIX 1.0UH 10%	1
L508	A700024P1	COIL RF FIX 0.1UH 10%	1
L509	K805527G1	COIL ASM	1
L510	J707256P3	COIL FIX	1
L511	J707256P3	COIL FIX	1
L512	K805653G1	COIL ASM 1 1/2T	1
L513	K805653G3	COIL ASM 3 1/2T	1
L601	A700024P13	COIL RF FIX 1.0UH 10%	1
L602	A700024P13	COIL RF FIX 1.0UH 10%	1
L603	A700024P13	COIL RF FIX 1.0UH 10%	1
L604	A700024P13	COIL RF FIX 1.0UH 10%	1
L605	L855671P1	COIL RADIO FREQUENCY	1
L606	A700024P13	COIL RF FIX 1.0UH 10%	1
L607	A700024P13	COIL RF FIX 1.0UH 10%	1
L608	A700024P1	COIL RF FIX 0.1UH 10%	1
L609	K805653G6	COIL ASM 6 1/2T	1
L610	A700024P29	COIL RF FIX 22UH 10%	1
P102	J707064P112	CONN PWB FEM 12-CKT	1
P105	A701883P4	CONN PWB FEM RECP	1
Q100	J707388P1	TSTR NPN SI BFR 53	1
Q101	J707388P1	TSTR NPN SI BFR 53	1
Q102	A701940P1	TSTR NPN SI RF-PWR 0.4W	1
Q103	A700066P2	TSTR NPN SI RF-PWR 2.0W	1

Pos	Code No	Description	Qt
Q104	J708167P2	TSTR NPN SI RF-PWR 23W	1
Q105	J708556P1	TSTR NPN SI RF-PWR 28W	1
Q106	J707432P1	TSTR PNP SI BCX 18	1
Q107	J707386P1	TSTR NPN SI BCW 32	1
Q108	J708406P1	TSTR NPN SI BD 233	1
Q201	J707435P1	TSTR PNP SI BC 369	1
Q202	J707386P1	TSTR NPN SI BCW 32	1
Q203	J707432P1	TSTR PNP SI BCX 18	1
Q204	J707386P1	TSTR NPN SI BCW 32	1
Q301	J706011P2	TSTR NPN SI BFR 91A	1
Q302	J708315P1	TSTR JFET SI 2N5245	1
Q401	J707817P1	TSTR JFET SI J 309	1
Q402	J707817P1	TSTR JFET SI J 309	1
Q403	J707419P1	TSTR JFET SI BF511	1
Q404	J708418P1	TSTR NPN SI BFS 20	1
Q405	J708418P1	TSTR NPN SI BFS 20	1
Q406	J708418P1	TSTR NPN SI BFS 20	1
Q407	J707386P1	TSTR NPN SI BCW 32	1
Q408	J707387P1	TSTR PNP SI BCW 30	1
Q501	J707817P1	TSTR JFET SI J 309	1
Q502	J707388P1	TSTR NPN SI BFR 53	1
Q503	J707388P1	TSTR NPN SI BFR 53	1
Q504	J708318P1	TSTR PNP SI BFT 92	1
Q601	J707817P1	TSTR JFET SI J 309	1
Q602	J707388P1	TSTR NPN SI BFR 53	1
Q603	J707388P1	TSTR NPN SI BFR 53	1
Q604	J708318P1	TSTR PNP SI BFT 92	1
Q605	J707386P1	TSTR NPN SI BCW 32	1
Q606	J707386P1	TSTR NPN SI BCW 32	1
Q607	J707386P1	TSTR NPN SI BCW 32	1
Q608	J707433P1	TSTR MFET SI BF 989	1
Q609	J707419P1	TSTR JFET SI BF511	1
R000	J707385P332	RES MFLM 1/8W 3K3 5%	1
R100	J707385P152	RES MFLM 1/8W 1K5 5%	1
R101	J707385P562	RES MFLM 1/8W 5K6 5%	1
R102	J707385P470	RES MFLM 1/8W 47R 5%	1
R103	J707385P152	RES MFLM 1/8W 1K5 5%	1

Pos	Code No	Description	Qt
R104	J707385P562	RES MFLM 1/8W 5K6 5%	1
R105	J707385P270	RES MFLM 1/8W 27R 5%	1
R106	J707385P270	RES MFLM 1/8W 27R 5%	1
R107	J707385P102	RES MFLM 1/8W 1KO 5%	1
R108	J707385P100	RES MFLM 1/8W 10R 5%	1
R109	J707385P100	RES MFLM 1/8W 10R 5%	1
R110	J707385P947	RES MFLM 1/8W 4R7 20%	1
R111	J707385P102	RES MFLM 1/8W 1KO 5%	1
R112	J707385P270	RES MFLM 1/8W 27R 5%	1
R113	J707385P100	RES MFLM 1/8W 10R 5% G1/G2/G3	1
R114	J707385P100	RES MFLM 1/8W 10R 5% G1/G2/G3	1
R115	J707385P100	RES MFLM 1/8W 10R 5%	1
R116	J707385P100	RES MFLM 1/8W 10R 5%	1
R117	J707385P100	RES MFLM 1/8W 10R 5%	1
R119	J707385P473	RES MFLM 1/8W 47K 5%	1
R120	J707385P473	RES MFLM 1/8W 47K 5%	1
R121	J707385P221	RES MFLM 1/8W 220R 5% G1/G2/G3	1
R121	J707385P102	RES MFLM 1/8W 1KO 5% G4/G5/G6	1
R122	J707385P221	RES MFLM 1/8W 220R 5% G1/G2/G3	1
R122	J707385P102	RES MFLM 1/8W 1KO 5% G4/G5/G6	1
R123	J707385P220	RES MFLM 1/8W 22R 5%	1
R124	J707385P220	RES MFLM 1/8W 22R 5%	1
R125	J707385P391	RES MFLM 1/8W 390R 5% G1/G2/G3	1
R126	J707385P391	RES MFLM 1/8W 390R 5% G1/G2/G3	1
R127	J707385P101	RES MFLM 1/8W 100R 5% G1/G2/G3	1
R130	J707385P103	RES MFLM 1/8W 10K 5%	1
R131	J707385P472	RES MFLM 1/8W 4K7 5%	1
R132	J708538P9	RES VAR CERM 200K 20%	1
R133	J708538P4	RES VAR CERM 5KO 20%	1
R134	J707385P100	RES MFLM 1/8W 10R 5%	1
R135	J706147P2	RES THERM PTC 80R 25% G1/G2/G3	1
R136	J707385P153	RES MFLM 1/8W 15K 5% G1/G2/G3	1
R136	J707385P101	RES MFLM 1/8W 100R 5% G4/G5/G6	1
R137	J707385P473	RES MFLM 1/8W 47K 5%	1
R138	J707385P333	RES MFLM 1/8W 33K 5%	1
R139	J707385P333	RES MFLM 1/8W 33K 5%	1
R140	J707385P104	RES MFLM 1/8W 100K 5%	1

Pos	Code No	Description	Qt
R141	J707385P222	RES MFLM 1/8W 2K2 5%	1
R142	J707385P222	RES MFLM 1/8W 2K2 5%	1
R143	J707385P104	RES MFLM 1/8W 100K 5%	1
R144	J707385P682	RES MFLM 1/8W 6K8 5%	1
R145	J707385P473	RES MFLM 1/8W 47K 5%	1
R146	J707385P472	RES MFLM 1/8W 4K7 5%	1
R147	J707385P123	RES MFLM 1/8W 12K 5%	1
R148	J707385P331	RES MFLM 1/8W 330R 5%	1
R149	J707385P683	RES MFLM 1/8W 68K 5%	1
R150	J707385P104	RES MFLM 1/8W 100K 5%	1
R151	J707385P274	RES MFLM 1/8W 270K 5%	1
R152	J707385P562	RES MFLM 1/8W 5K6 5%	1
R153	J707385P222	RES MFLM 1/8W 2K2 5%	1
R154	J707385P102	RES MFLM 1/8W 1K0 5%	1
R155	J707385P472	RES MFLM 1/8W 4K7 5%	1
R201	J707385P561	RES MFLM 1/8W 560R 5%	1
R202	J707385P271	RES MFLM 1/8W 270R 5%	1
R203	J707385P153	RES MFLM 1/8W 15K 5%	1
R204	J707385P153	RES MFLM 1/8W 15K 5%	1
R205	J707385P472	RES MFLM 1/8W 4K7 5%	1
R206	J707385P272	RES MFLM 1/8W 2K7 5%	1
R207	J707385P563	RES MFLM 1/8W 56K 5%	1
R208	J707385P563	RES MFLM 1/8W 56K 5%	1
R209	J707385P271	RES MFLM 1/8W 270R 5%	1
R301	J707385P473	RES MFLM 1/8W 47K 5%	1
R302	J707385P221	RES MFLM 1/8W 220R 5%	1
R303	J707385P104	RES MFLM 1/8W 100K 5%	1
R304	J707385P104	RES MFLM 1/8W 100K 5%	1
R306	J707385P222	RES MFLM 1/8W 2K2 5%	1
R307	J707385P681	RES MFLM 1/8W 680R 5%	1
R308	J707385P560	RES MFLM 1/8W 56R 5%	1
R309	J707385P270	RES MFLM 1/8W 27R 5%	1
R310	J707385P104	RES MFLM 1/8W 100K 5%	1
R311	J707385P270	RES MFLM 1/8W 27R 5%	1
R312	J707385P104	RES MFLM 1/8W 100K 5%	1
R313	J707385P104	RES MFLM 1/8W 100K 5%	1
R314	J707385P104	RES MFLM 1/8W 100K 5%	1

Pos	Code No	Description	Qt
R315	J707385P104	RES MFLM 1/8W 100K 5%	1
R316	J707385P104	RES MFLM 1/8W 100K 5%	1
R317	J707385P272	RES MFLM 1/8W 2K7 5%	1
R318	J707385P100	RES MFLM 1/8W 10R 5%	1
R319	J707385P101	RES MFLM 1/8W 100R 5%	1
R320	J707385P103	RES MFLM 1/8W 10K 5%	1
R321	J707385P270	RES MFLM 1/8W 27R 5%	1
R322	J707385P104	RES MFLM 1/8W 100K 5%	1
R323	J707385P102	RES MFLM 1/8W 1K0 5%	1
R324	J707385P101	RES MFLM 1/8W 100R 5%	1
R401	J707385P560	RES MFLM 1/8W 56R 5%	1
R402	J707385P100	RES MFLM 1/8W 10R 5%	1
R403	J707385P332	RES MFLM 1/8W 3K3 5%	1
R405	J707385P100	RES MFLM 1/8W 10R 5%	1
R406	J707385P820	RES MFLM 1/8W 82R 5%	1
R407	J707385P470	RES MFLM 1/8W 47R 5%	1
R408	J707385P470	RES MFLM 1/8W 47R 5%	1
R410	J707385P272	RES MFLM 1/8W 2K7 5%	1
R411	J707385P682	RES MFLM 1/8W 6K8 5%	1
R412	J707385P272	RES MFLM 1/8W 2K7 5%	1
R413	J707385P821	RES MFLM 1/8W 820R 5%	1
R414	J707385P220	RES MFLM 1/8W 22R 5%	1
R415	J707385P222	RES MFLM 1/8W 2K2 5%	1
R416	J707385P562	RES MFLM 1/8W 5K6 5%	1
R417	J707385P103	RES MFLM 1/8W 10K 5%	1
R418	J707385P153	RES MFLM 1/8W 15K 5%	1
R419	J707385P182	RES MFLM 1/8W 1K8 5%	1
R420	J707385P182	RES MFLM 1/8W 1K8 5%	1
R421	J707385P182	RES MFLM 1/8W 1K8 5%	1
R422	J707385P473	RES MFLM 1/8W 47K 5%	1
R423	J707385P153	RES MFLM 1/8W 15K 5%	1
R424	J708538P5	RES VAR CERM 10K 20%	1
R425	J707385P272	RES MFLM 1/8W 2K7 5%	1
R426	J707385P563	RES MFLM 1/8W 56K 5%	1
R427	J707385P273	RES MFLM 1/8W 27K 5%	1
R428	J707385P683	RES MFLM 1/8W 68K 5%	1
R429	J707385P104	RES MFLM 1/8W 100K 5%	1

Pos	Code No	Description	Qt
R430	J707385P334	RES MFLM 1/8W 330K 5%	1
R431	J707385P473	RES MFLM 1/8W 47K 5%	1
R432	J707385P473	RES MFLM 1/8W 47K 5%	1
R433	J707385P271	RES MFLM 1/8W 270R 5%	1
R434	J707385P102	RES MFLM 1/8W 1K0 5%	1
R435	J706147P3	RES THERM PTC 250R 25%	1
R436	J707385P392	RES MFLM 1/8W 3K9 5%	1
R437	J707406P7	RES THERM NTC 220R 10%	1
R438	J707385P222	RES MFLM 1/8W 2K2 5%	1
R439	J707385P392	RES MFLM 1/8W 3K9 5%	1
R440	J707385P392	RES MFLM 1/8W 3K9 5%	1
R441	J707385P101	RES MFLM 1/8W 100R 5%	1
R442	J708538P6	RES VAR CERM 20K 20%	1
R444	J707385P473	RES MFLM 1/8W 47K 5%	1
R445	J707385P273	RES MFLM 1/8W 27K 5%	1
R446	J707385P224	RES MFLM 1/8W 220K 5%	1
R447	J707385P392	RES MFLM 1/8W 3K9 5%	1
R448	J707385P101	RES MFLM 1/8W 100R 5%	1
R449	J707385P470	RES MFLM 1/8W 47R 5%	1
R450	J707385P103	RES MFLM 1/8W 10K 5%	1
R451	J707385P332	RES MFLM 1/8W 3K3 5%	1
R501	J707385P122	RES MFLM 1/8W 1K2 5%	1
R502	J707385P122	RES MFLM 1/8W 1K2 5%	1
R503	J707385P122	RES MFLM 1/8W 1K2 5%	1
R504	J707385P104	RES MFLM 1/8W 100K 5%	1
R505	J707385P104	RES MFLM 1/8W 100K 5%	1
R506	J707385P104	RES MFLM 1/8W 100K 5%	1
R508	J707385P103	RES MFLM 1/8W 10K 5%	1
R509	J707385P100	RES MFLM 1/8W 10R 5%	1
R510	J707385P332	RES MFLM 1/8W 3K3 5%	1
R512	J707385P561	RES MFLM 1/8W 560R 5%	1
R513	J707385P183	RES MFLM 1/8W 18K 5%	1
R514	J707385P472	RES MFLM 1/8W 4K7 5%	1
R515	J707385P271	RES MFLM 1/8W 270R 5%	1
R517	J707385P101	RES MFLM 1/8W 100R 5%	1
R520	J707385P682	RES MFLM 1/8W 6K8 5%	1
R521	J707385P152	RES MFLM 1/8W 1K5 5%	1

Pos	Code No	Description	Qt
R522	J707385P680	RES MFLM 1/8W 68R 5%	1
R523	J707385P222	RES MFLM 1/8W 2K2 5%	1
R524	J707385P472	RES MFLM 1/8W 4K7 5%	1
R525	J707385P680	RES MFLM 1/8W 68R 5%	1
R526	J707385P104	RES MFLM 1/8W 100K 5%	1
R527	J707385P104	RES MFLM 1/8W 100K 5%	1
R528	J707385P103	RES MFLM 1/8W 10K 5%	1
R529	J707385P150	RES MFLM 1/8W 15R 5%	1
R530	J707385P182	RES MFLM 1/8W 1K8 5%	1
R531	J707385P682	RES MFLM 1/8W 6K8 5%	1
R532	J707385P392	RES MFLM 1/8W 3K9 5%	1
R601	J707385P122	RES MFLM 1/8W 1K2 5%	1
R602	J707385P122	RES MFLM 1/8W 1K2 5%	1
R603	J707385P122	RES MFLM 1/8W 1K2 5%	1
R604	J707385P104	RES MFLM 1/8W 100K 5%	1
R605	J707385P104	RES MFLM 1/8W 100K 5%	1
R606	J707385P104	RES MFLM 1/8W 100K 5%	1
R607	J707385P561	RES MFLM 1/8W 560R 5%	1
R608	J707385P221	RES MFLM 1/8W 220R 5%	1
R609	J707385P472	RES MFLM 1/8W 4K7 5%	1
R610	J707385P183	RES MFLM 1/8W 18K 5%	1
R611	J707385P271	RES MFLM 1/8W 270R 5%	1
R612	J707385P223	RES MFLM 1/8W 22K 5%	1
R613	J707385P101	RES MFLM 1/8W 100R 5%	1
R614	J707385P682	RES MFLM 1/8W 6K8 5%	1
R615	J707385P222	RES MFLM 1/8W 2K2 5%	1
R616	J707385P101	RES MFLM 1/8W 100R 5%	1
R617	J707385P101	RES MFLM 1/8W 100R 5%	1
R618	J707385P102	RES MFLM 1/8W 1K0 5%	1
R619	J707385P102	RES MFLM 1/8W 1K0 5%	1
R620	J707385P272	RES MFLM 1/8W 2K7 5%	1
R621	J707385P330	RES MFLM 1/8W 33R 5%	1
R622	J707385P102	RES MFLM 1/8W 1K0 5%	1
R623	J707385P123	RES MFLM 1/8W 12K 5%	1
R624	J707385P223	RES MFLM 1/8W 22K 5%	1
R625	J707385P470	RES MFLM 1/8W 47R 5%	1
R626	J707385P100	RES MFLM 1/8W 10R 5%	1

Pos	Code No	Description	Qt
R627	J707385P103	RES MFLM 1/8W 10K 5%	1
R628	J707385P224	RES MFLM 1/8W 220K 5%	1
R629	J707385P393	RES MFLM 1/8W 39K 5%	1
R629	J707385P823	RES MFLM 1/8W 82K 5% G3 ONLY	1
R630	J707385P100	RES MFLM 1/8W 10R 5%	1
R631	J707385P332	RES MFLM 1/8W 3K3 5% NOT IN G3	1
R632	J707385P393	RES MFLM 1/8W 39K 5%	1
R633	J707385P223	RES MFLM 1/8W 22K 5%	1
R634	J707385P470	RES MFLM 1/8W 47R 5%	1
R635	J707385P102	RES MFLM 1/8W 1K0 5%	1
R636	J707385P332	RES MFLM 1/8W 3K3 5%	1
R637	J707385P181	RES MFLM 1/8W 180R 5%	1
R638	J707385P154	RES MFLM 1/8W 150K 5%	1
R638	J707385P823	RES MFLM 1/8W 82K 5% G3 ONLY	1
R639	J707385P682	RES MFLM 1/8W 6K8 5%	1
R639	J707385P822	RES MFLM 1/8W 8K2 5% G3 ONLY	1
R640	J707385P105	RES MFLM 1/8W 1M0 10%	1
R641	J707385P184	RES MFLM 1/8W 180K 5%	1
R642	J707385P184	RES MFLM 1/8W 180K 5%	1
R643	J707385P105	RES MFLM 1/8W 1M0 10%	1
R644	J707385P224	RES MFLM 1/8W 220K 5%	1
R645	J707385P103	RES MFLM 1/8W 10K 5%	1
R646	J707385P472	RES MFLM 1/8W 4K7 5%	1
R647	J707385P333	RES MFLM 1/8W 33K 5%	1
R648	J707385P683	RES MFLM 1/8W 68K 5%	1
R649	J707385P104	RES MFLM 1/8W 100K 5%	1
R650	J707385P223	RES MFLM 1/8W 22K 5%	1
R651	J707385P104	RES MFLM 1/8W 100K 5%	1
R652	J707385P103	RES MFLM 1/8W 10K 5%	1
R653	J707385P333	RES MFLM 1/8W 33K 5%	1
R654	J707385P562	RES MFLM 1/8W 5K6 5%	1
R655	J707385P183	RES MFLM 1/8W 18K 5%	1
R656	J707385P393	RES MFLM 1/8W 39K 5%	1
R657	J707385P823	RES MFLM 1/8W 82K 5%	1
R658	J707385P154	RES MFLM 1/8W 150K 5%	1
R659	J707385P102	RES MFLM 1/8W 1K0 5%	1
R660	J707385P333	RES MFLM 1/8W 33K 5%	1

Pos	Code No	Description	Qt
R661	J707385P473	RES MFLM 1/8W 47K 5%	1
R662	J707385P393	RES MFLM 1/8W 39K 5%	1
R663	J708538P5	RES VAR CERM 10K 20%	1
R664	J707385P333	RES MFLM 1/8W 33K 5%	1
R665	J707385P824	RES MFLM 1/8W 820K 5%	1
R666	J707385P124	RES MFLM 1/8W 120K 5%	1
R667	J707385P124	RES MFLM 1/8W 120K 5%	1
R668	J707385P122	RES MFLM 1/8W 1K2 5%	1
R669	J707385P221	RES MFLM 1/8W 220R 5%	1
R670	J707385P103	RES MFLM 1/8W 10K 5%	1
R671	J707385P562	RES MFLM 1/8W 5K6 5%	1
R672	J707385P822	RES MFLM 1/8W 8K2 5%	1
R673	J707385P822	RES MFLM 1/8W 8K2 5%	1
R674	J707385P101	RES MFLM 1/8W 100R 5%	1
R675	J708538P5	RES VAR CERM 10K 20%	1
R676	J707385P123	RES MFLM 1/8W 12K 5%	1
R677	J708538P5	RES VAR CERM 10K 20%	1
R678	J707385P821	RES MFLM 1/8W 820R 5%	1
R679	J707385P683	RES MFLM 1/8W 68K 5%	1
R680	J708538P5	RES VAR CERM 10K 20%	1
R681	J707385P683	RES MFLM 1/8W 68K 5%	1
R682	J707385P561	RES MFLM 1/8W 560R 5%	1
R683	J707385P271	RES MFLM 1/8W 270R 5%	1
R684	J707385P105	RES MFLM 1/8W 1M0 10%	1
R685	J707385P183	RES MFLM 1/8W 18K 5%	1
R686	J707385P103	RES MFLM 1/8W 10K 5%	1
R687	J707385P183	RES MFLM 1/8W 18K 5%	1
R688	J707385P103	RES MFLM 1/8W 10K 5%	1
R689	J707385P124	RES MFLM 1/8W 120K 5%	1
R690	J707385P152	RES MFLM 1/8W 1K5 5%	1
R691	J707385P223	RES MFLM 1/8W 22K 5%	1
R692	J707385P105	RES MFLM 1/8W 1M0 10%	1
R693	J707385P223	RES MFLM 1/8W 22K 5%	1
R694	J707385P223	RES MFLM 1/8W 22K 5%	1
R695	J707385P105	RES MFLM 1/8W 1M0 10%	1
R696	J707385P223	RES MFLM 1/8W 22K 5%	1
R697	J707385P223	RES MFLM 1/8W 22K 5%	1

DATE: 5/18/1988

Pos	Code No	Description	Qt
R698	J707385P105	RES MFLM 1/8W 1MO 10%	1
R699	J707385P273	RES MFLM 1/8W 27K 5%	1
R700	J707385P103	RES MFLM 1/8W 10K 5%	1
R701	J707385P824	RES MFLM 1/8W 820K 5%	1
R702	J707385P824	RES MFLM 1/8W 820K 5%	1
R703	J707385P154	RES MFLM 1/8W 150K 5%	1
R704	J707385P561	RES MFLM 1/8W 560R 5%	1
R705	J707385P122	RES MFLM 1/8W 1K2 5%	1
R706	J707385P561	RES MFLM 1/8W 560R 5%	1
U100	J708165P2	IC LIN OP-AMP 324	1
U201	J708333P1	IC LIN VR FIX 4785	1
U401	J707449P1	IC LIN IF-AMP 3357	1
U402	M905766G1	INT CKT SQ 4002 G1/G2/G4/G5	1
U402	M905766G2	INT CKT SQ 4003 G3/G6	1
U601	J707859P1	IC LIN OP-AMP 204	1
U602	J707859P1	IC LIN OP-AMP 204	1
U603	J707859P1	IC LIN OP-AMP 204	1
U604	J707859P1	IC LIN OP-AMP 204	1
U606	J707243P1	IC DIG REG 4094	1
U607	J707374P3	IC PLL PRESC 12017	1
U607	J707374P4	IC PLL PRESC 12018 G3 ONLY	1
U608	B800902P1	IC PLL SYN CUSTOM DES	1
U609	J707859P1	IC LIN OP-AMP 204	1
U610	J708503P2	IC LIN CMPAR LM 339	1
U615	J708621P2	CPLR OPTO PC 827	1
U616	J708503P2	IC LIN CMPAR LM 339	1
W004	J706451P1	WIRE STRAP	1
W1	A700184P1	RES WIRE JMPR OR JUMPER	1
W3	J707256P1	COIL FIX	1
W5	J708717P1	STRAP	1
W6	J708716P1	STRAP G1/G2/G3	1
Y401	J708426P1	CRYSTAL UNIT 44.5450MHZ	1
Z401	J708330P1	FLTR CRY 45.0 +/-7.5KHZ G1/G4	1
Z401	J708330P2	FLTR CRY 45.0 +/-7.5KHZ G2/G5	1
Z401	J708330P3	FLTR CRY 45.0 +/-7.5KHZ G3/G6	1
Z402	J707446P1	FLTR CER 455K +/-10KHZ G1/G4	1
Z402	J707446P3	FLTR CER 455K +/-10KHZ G2/G5	1

Pos	Code No	Description	Qt
Z402	J707446P4	FLTR CER 455K +/-10KHZ G3/G6	1
Z403	J707446P1	FLTR CER 455K +/-10KHZ G1/G4	1
Z403	J707446P3	FLTR CER 455K +/-10KHZ G2/G5	1
Z403	J707446P4	FLTR CER 455K +/-10KHZ G3/G6	1
	M905780P1R0	BD PW G1/G2/G3	1
	M905780P2R0	BD PW G4/G5/G6	1
		NON ELECTRONICAL PARTS	
	K805569G1	SHIELD METALLIZED	1
	J708966G1	HEAT SINK MODF	1
	J708561P3	COIL FIXED	1
	J708561P3	COIL FIXED	1

DATE: 9/23/1987

Pos	Code No	Description	Qt
C100	J707436P13	CAP CER NPO 10P 5%	1
C101	J707436P21	CAP CER NPO 15P 5%	1
C102	J707438P14	CAP CER CL2 10N 10%	1
C103	J707436P8	CAP CER NPO 3P9 .25P	1
C104	J707436P8	CAP CER NPO 3P9 .25P	1
C105	J707436P33	CAP CER NPO 27P 5%	1
C107	J707436P61	CAP CER NPO 100P 5%	1
C108	J707436P21	CAP CER NPO 15P 5%	1
C109	J707436P33	CAP CER NPO 27P 5%	1
C110	J707436P41	CAP CER NPO 39P 5%	1
C111	J707438P14	CAP CER CL2 10N 10%	1
C112	J707436P61	CAP CER NPO 100P 5%	1
C113	J707436P33	CAP CER NPO 27P 5%	1
C114	J707809P13	CAP CER NPO 10P 5%	1
C115	J707809P18	CAP CER NPO 27P 5%	1
C116	J707809P20	CAP CER NPO 39P 5%	1
C117	J707809P25	CAP CER NPO 100P 5%	1
C118	J707438P8	CAP CER CL2 3N3 10%	1
C119	J707809P25	CAP CER NPO 100P 5% G1/G2/G3	1
C120	J707809P21	CAP CER NPO 47P 5%	1
C121	A700006P19	CAP MICA 27P 5% G1/G2/G3	1
C122	A700006P19	CAP MICA 27P 5% G1/G2/G3	1
C123	J707809P25	CAP CER NPO 100P 5% G1/G2/G3	1
C124	J707438P14	CAP CER CL2 10N 10% G1/G2/G3	1
C126	A700006P11	CAP MICA 15P 5% G1/G2/G3	1
C127	A700006P11	CAP MICA 15P 5% G1/G2/G3	1
C128	J707809P14	CAP CER NPO 12P 5% G1/G2/G3	1
C128	J707809P13	CAP CER NPO 10P 5% G4/G5/G6	1
C129	J707809P14	CAP CER NPO 12P 5% G1/G2/G3	1
C129	J707809P13	CAP CER NPO 10P 5% G4/G5/G6	1
C130	A700006P19	CAP MICA 27P 5%	1
C131	A700006P19	CAP MICA 27P 5%	1
C132	J707809P27	CAP CER NPO 150P 5%	1
C133	J707438P14	CAP CER CL2 10N 10%	1
C134	A700006P26	CAP MICA 47P 5% G1/G2/G3	1
C134	A700006P28	CAP MICA 56P 5% G4/G5/G6	1
C135	A700006P26	CAP MICA 47P 5% G1/G2/G3	1

Pos	Code No	Description	Qt
C135	A700006P28	CAP MICA 56P 5% G4/G5/G6	1
C136	A700006P14	CAP MICA 18P 5%	1
C137	J707353P6	CAP ELECT 4U7 25V	1
C138	J707438P22	CAP CER CL2 47N 10%	1
C139	J707809P25	CAP CER NPO 100P 5%	1
C140	J707809P25	CAP CER NPO 100P 5%	1
C141	J707809P25	CAP CER NPO 100P 5%	1
C142	J707809P25	CAP CER NPO 100P 5%	1
C143	J707809P25	CAP CER NPO 100P 5%	1
C144	J707809P25	CAP CER NPO 100P 5%	1
C145	J707809P25	CAP CER NPO 100P 5%	1
C146	A700006P4	CAP PTFE 8P2 10%	1
C147	A700006P11	CAP MICA 15P 5%	1
C148	A700006P11	CAP MICA 15P 5%	1
C149	A700006P3	CAP PTFE 6P8 10%	1
C150	J707809P8	CAP CER NPO 3P9 .25P	1
C151	J707438P8	CAP CER CL2 3N3 10%	1
C152	J707436P61	CAP CER NPO 100P 5%	1
C153	J707809P1	CAP CER NPO 1P0 .25P	1
C154	J707809P1	CAP CER NPO 1P0 .25P	1
C155	J707809P25	CAP CER NPO 100P 5%	1
C160	J707436P61	CAP CER NPO 100P 5%	1
C161	J707436P61	CAP CER NPO 100P 5%	1
C162	J707353P3	CAP ELECT 0U47 50V	1
C163	J707436P61	CAP CER NPO 100P 5%	1
C164	J707438P20	CAP CER CL2 33N 10%	1
C165	J707438P14	CAP CER CL2 10N 10%	1
C166	J707436P61	CAP CER NPO 100P 5%	1
C167	J707436P61	CAP CER NPO 100P 5%	1
C168	J707438P14	CAP CER CL2 10N 10%	1
C169	J707438P26	CAP CER CL2 100N 10%	1
C170	J707436P61	CAP CER NPO 100P 5%	1
C171	J707436P61	CAP CER NPO 100P 5%	1
C201	J707438P26	CAP CER CL2 100N 10%	1
C202	J707444P8	CAP TA SOL 22U 16V	1
C203	J707444P6	CAP TA SOL 4U7 35V	1
C204	J707438P3	CAP CER CL2 470P 10%	1

DATE: 9/23/1987

Pos	Code No	Description	Qt
C301	J707809P25	CAP CER NPO 100P 5%	1
C302	J707809P15	CAP CER NPO 15P 5%	1
C303	J707809P15	CAP CER NPO 15P 5%	1
C304	J708287P1	CAP VAR CER 3.3/8 PF	1
C305	J707436P10	CAP CER NPO 5P6 .25P	1
C306	J707483P6	CAP PHEN 0P82 5%	1
C307	J707436P61	CAP CER NPO 100P 5%	1
C308	J707436P11	CAP CER NPO 6P8 .25P	1
C309	J708287P1	CAP VAR CER 3.3/8 PF	1
C310	J707438P3	CAP CER CL2 470P 10%	1
C311	J707436P37	CAP CER NPO 33P 5%	1
C312	J707436P69	CAP CER NPO 220P 5%	1
C313	J707438P3	CAP CER CL2 470P 10%	1
C314	J707436P5	CAP CER NPO 2P2 .25P	1
C315	J707436P12	CAP CER NPO 8P2 .25P	1
C316	J708287P1	CAP VAR CER 3.3/8 PF	1
C317	J707444P2	CAP TA SOL 0U22 35V	1
C318	J707438P3	CAP CER CL2 470P 10%	1
C319	J707436P11	CAP CER NPO 6P8 .25P	1
C320	J707438P3	CAP CER CL2 470P 10%	1
C321	J708287P1	CAP VAR CER 3.3/8 PF	1
C322	J707483P4	CAP PHEN 0P56 5%	1
C323	J707483P4	CAP PHEN 0P56 5%	1
C324	J707436P11	CAP CER NPO 6P8 .25P	1
C325	J707438P3	CAP CER CL2 470P 10%	1
C326	J708287P1	CAP VAR CER 3.3/8 PF	1
C327	J707436P11	CAP CER NPO 6P8 .25P	1
C328	J707483P1	CAP PHEN 0P47 5%	1
C329	J707436P10	CAP CER NPO 5P6 .25P	1
C330	J708287P1	CAP VAR CER 3.3/8 PF	1
C331	J707436P6	CAP CER NPO 2P7 .25P	1
C332	J708287P1	CAP VAR CER 3.3/8 PF	1
C333	J707436P12	CAP CER NPO 8P2 .25P	1
C334	J707483P2	CAP PHEN 0P33 5%	1
C335	J707438P3	CAP CER CL2 470P 10%	1
C336	J708287P1	CAP VAR CER 3.3/8 PF	1
C337	J707436P12	CAP CER NPO 8P2 .25P	1

Pos	Code No	Description	Qt
C338	J707436P11	CAP CER NPO 6P8 .25P	1
C339	J707438P14	CAP CER CL2 10N 10%	1
C340	J707438P14	CAP CER CL2 10N 10%	1
C341	J707438P3	CAP CER CL2 470P 10%	1
C342	J708287P1	CAP VAR CER 3.3/8 PF	1
C343	J707436P13	CAP CER NPO 10P 5%	1
C344	J707438P3	CAP CER CL2 470P 10%	1
C345	J707436P37	CAP CER NPO 33P 5%	1
C347	J707438P3	CAP CER CL2 470P 10%	1
C348	J707438P3	CAP CER CL2 470P 10%	1
C349	J707436P4	CAP CER NPO 1P8 .25P	1
C350	J707438P3	CAP CER CL2 470P 10%	1
C401	J707438P8	CAP CER CL2 3N3 10%	1
C402	J707438P8	CAP CER CL2 3N3 10%	1
C403	J707438P8	CAP CER CL2 3N3 10%	1
C404	J707436P9	CAP CER NPO 4P7 .25P	1
C405	J707438P26	CAP CER CL2 100N 10%	1
C406	J707436P10	CAP CER NPO 5P6 .25P	1
C407	J707436P9	CAP CER NPO 4P7 .25P	1
C408	J707438P5	CAP CER CL2 1N 10%	1
C409	J707438P8	CAP CER CL2 3N3 10%	1
C410	J707444P8	CAP TA SOL 22U 16V	1
C411	J707438P26	CAP CER CL2 100N 10%	1
C412	J707438P26	CAP CER CL2 100N 10%	1
C413	J707436P21	CAP CER NPO 15P 5%	1
C414	J707438P8	CAP CER CL2 3N3 10%	1
C415	J707438P8	CAP CER CL2 3N3 10%	1
C416	J708702P16	CAP CER N750 18P 5%	1
C417	J707436P49	CAP CER NPO 56P 5%	1
C418	J707438P14	CAP CER CL2 10N 10%	1
C419	J707438P26	CAP CER CL2 100N 10%	1
C420	J707438P14	CAP CER CL2 10N 10%	1
C421	J707438P26	CAP CER CL2 100N 10%	1
C422	J707438P26	CAP CER CL2 100N 10%	1
C423	J707436P13	CAP CER NPO 10P 5%	1
C424	J707438P8	CAP CER CL2 3N3 10%	1
C425	J707412P13	CAP PYES 470N 10%	1

DATE: 9/23/1987

Pos	Code No	Description	Qt
C426	J707436P93	CAP CER NPO 2N2 5%	1
C427	J707436P73	CAP CER NPO 330P 5%	1
C428	J707436P73	CAP CER NPO 330P 5%	1
C429	J707438P14	CAP CER CL2 10N 10%	1
C430	J707444P8	CAP TA SOL 22U 16V	1
C431	J707444P8	CAP TA SOL 22U 16V	1
C432	J707438P26	CAP CER CL2 100N 10%	1
C433	J707438P26	CAP CER CL2 100N 10%	1
C434	J707438P8	CAP CER CL2 3N3 10%	1
C435	J707436P1	CAP CER NPO 1P0 .25P	1
C436	J707438P26	CAP CER CL2 100N 10%	1
C501	J707412P11	CAP PYES 220N 10%	1
C502	J707412P11	CAP PYES 220N 10%	1
C503	J707412P11	CAP PYES 220N 10%	1
C504	A700235P3	CAP CER N150 1P5 .25P	1
C505	A700235P3	CAP CER N150 1P5 .25P	1
C506	A700235P6	CAP CER N150 2P7 .25P	1
C507	A700235P5	CAP CER N150 2P2 .25P	1
C508	A700235P10	CAP CER N150 5P6 .25P	1
C509	A700235P12	CAP CER N150 8P2 .25P	1
C510	A700235P9	CAP CER N150 4P7 .25P	1
C512	J707483P7	CAP PHEN 1P00 5%	1
C513	J707438P3	CAP CER CL2 470P 10%	1
C515	J707436P9	CAP CER NPO 4P7 .25P	1
C516	J707436P7	CAP CER NPO 3P3 .25P	1
C517	J707444P6	CAP TA SOL 4U7 35V	1
C518	J707436P6	CAP CER NPO 2P7 .25P	1
C519	J707438P3	CAP CER CL2 470P 10%	1
C520	J707436P8	CAP CER NPO 3P9 .25P	1
C521	J707436P9	CAP CER NPO 4P7 .25P	1
C522	J707438P3	CAP CER CL2 470P 10%	1
C523	J707436P5	CAP CER NPO 2P2 .25P	1
C525	J707438P3	CAP CER CL2 470P 10%	1
C526	J707436P17	CAP CER NPO 12P 5%	1
C527	J707438P3	CAP CER CL2 470P 10%	1
C528	J707436P65	CAP CER NPO 150P 5%	1
C529	J708287P1	CAP VAR CER 3.3/8 PF	1

Pos	Code No	Description	Qt
C530	J707436P10	CAP CER NPO 5P6 .25P	1
C531	J707483P7	CAP PHEN 1P00 5%	1
C532	J707436P10	CAP CER NPO 5P6 .25P	1
C533	J708287P1	CAP VAR CER 3.3/8 PF	1
C534	J707436P7	CAP CER NPO 3P3 .25P	1
C535	J707436P7	CAP CER NPO 3P3 .25P	1
C536	J707438P3	CAP CER CL2 470P 10%	1
C537	J707438P3	CAP CER CL2 470P 10%	1
C538	J707438P3	CAP CER CL2 470P 10%	1
C539	J707438P3	CAP CER CL2 470P 10%	1
C540	J707438P3	CAP CER CL2 470P 10%	1
C541	J707438P3	CAP CER CL2 470P 10%	1
C542	J707438P3	CAP CER CL2 470P 10%	1
C543	J707438P3	CAP CER CL2 470P 10%	1
C544	J707438P3	CAP CER CL2 470P 10%	1
C545	J707438P3	CAP CER CL2 470P 10%	1
C601	J707412P11	CAP PYES 220N 10%	1
C602	J707412P11	CAP PYES 220N 10%	1
C603	J707412P11	CAP PYES 220N 10%	1
C604	A700235P5	CAP CER N150 2P2 .25P	1
C605	A700235P3	CAP CER N150 1P5 .25P	1
C606	A700235P8	CAP CER N150 3P9 .25P	1
C607	A700235P9	CAP CER N150 4P7 .25P	1
C608	A700235P12	CAP CER N150 8P2 .25P	1
C609	A700235P33	CAP CER N150 13P 5%	1
C610	A700235P12	CAP CER N150 8P2 .25P	1
C611	J707436P7	CAP CER NPO 3P3 .25P	1
C612	J707436P9	CAP CER NPO 4P7 .25P	1
C613	J707444P6	CAP TA SOL 4U7 35V	1
C614	J707436P6	CAP CER NPO 2P7 .25P	1
C615	J707436P77	CAP CER NPO 470P 5%	1
C616	J707438P3	CAP CER CL2 470P 10%	1
C617	J707436P7	CAP CER NPO 3P3 .25P	1
C618	J707436P9	CAP CER NPO 4P7 .25P	1
C619	J707438P3	CAP CER CL2 470P 10%	1
C620	J707436P1	CAP CER NPO 1P0 .25P	1
C621	J707438P3	CAP CER CL2 470P 10%	1

Pos	Code No	Description	Qt
C622	J707438P3	CAP CER CL2 470P 10%	1
C623	J707438P3	CAP CER CL2 470P 10%	1
C624	J707436P65	CAP CER NPO 150P 5%	1
C625	J707436P29	CAP CER NPO 22P 5%	1
C626	J707438P5	CAP CER CL2 1N 10%	1
C627	J707438P14	CAP CER CL2 10N 10%	1
C628	J707436P89	CAP CER NPO 1N5 5%	1
C629	J707436P65	CAP CER NPO 150P 5%	1
C630	J707438P26	CAP CER CL2 100N 10%	1
C632	J707438P26	CAP CER CL2 100N 10%	1
C633	J707444P17	CAP TA SOL 47U 10V	1
C634	J707438P26	CAP CER CL2 100N 10%	1
C635	J707438P3	CAP CER CL2 470P 10%	1
C636	J707444P17	CAP TA SOL 47U 10V	1
C637	J707438P26	CAP CER CL2 100N 10%	1
C639	J707438P8	CAP CER CL2 3N3 10%	1
C640	J707412P9	CAP PYES 100N 10%	1
C641	J707412P13	CAP PYES 470N 10%	1
C642	J707412P13	CAP PYES 470N 10%	1
C643	J707438P22	CAP CER CL2 47N 10%	1
C644	J707436P6	CAP CER NPO 2P7 .25P	1
C645	J707436P69	CAP CER NPO 220P 5%	1
C647	J707436P13	CAP CER NPO 10P 5%	1
C648	J707436P69	CAP CER NPO 220P 5%	1
C653	J707444P6	CAP TA SOL 4U7 35V	1
C656	J707436P77	CAP CER NPO 470P 5%	1
C657	J707438P3	CAP CER CL2 470P 10%	1
C658	J707438P14	CAP CER CL2 10N 10%	1
C659	J707438P5	CAP CER CL2 1N 10%	1
C660	J707438P3	CAP CER CL2 470P 10%	1
C661	J707438P3	CAP CER CL2 470P 10%	1
C662	J707438P3	CAP CER CL2 470P 10%	1
C663	J707438P3	CAP CER CL2 470P 10%	1
C664	J707438P26	CAP CER CL2 100N 10%	1
C665	J707438P3	CAP CER CL2 470P 10%	1
C666	J707438P3	CAP CER CL2 470P 10%	1
C667	J707438P3	CAP CER CL2 470P 10%	1

Pos	Code No	Description	Qt
C668	J707438P12	CAP CER CL2 6N8 5%	1
C669	J707436P61	CAP CER NPO 100P 5%	1
C670	J707436P17	CAP CER NPO 12P 5%	1
C671	J707438P26	CAP CER CL2 100N 10%	1
D100	J706892P2	DIO SI PIN UM 9678	1
D101	A700047P3	DIO SI SIG 1N6263	1
D102	J707390P1	DIO SI SIG BAV 74	1
D301	J706892P2	DIO SI PIN UM 9678	1
D302	J706007P1	DIO SI CAP BB505B	1
D303	J706007P1	DIO SI CAP BB505B	1
D304	A700047P3	DIO SI SIG 1N6263	1
D305	J706007P1	DIO SI CAP BB505B	1
D306	J706007P1	DIO SI CAP BB505B	1
D307	J706007P1	DIO SI CAP BB505B	1
D308	J706007P1	DIO SI CAP BB505B	1
D309	J706007P1	DIO SI CAP BB505B	1
D310	J706007P1	DIO SI CAP BB505B	1
D311	J706007P1	DIO SI CAP BB505B	1
D401	A700025P8	DIO SI ZENR 6V8 5% 0.4W	1
D501	J706007P1	DIO SI CAP BB505B	1
D502	J706007P1	DIO SI CAP BB505B	1
D503	J706007P1	DIO SI CAP BB505B	1
D504	J706007P1	DIO SI CAP BB505B	1
D505	J707769P2	DIO SI CAP BBY 31	1
D506	J707390P1	DIO SI SIG BAV 74	1
D507	J707769P1	DIO SI CAP BBY 31	1
D508	J707769P1	DIO SI CAP BBY 31	1
D601	J706007P1	DIO SI CAP BB505B	1
D602	J706007P1	DIO SI CAP BB505B	1
D603	J706007P1	DIO SI CAP BB505B	1
D604	J706007P1	DIO SI CAP BB505B	1
D605	J707390P1	DIO SI SIG BAV 74	1
D606	J708681P1	DIO SI SIG BAW 56	1
D607	J707390P1	DIO SI SIG BAV 74	1
D608	J707390P1	DIO SI SIG BAV 74	1
D610	J708681P1	DIO SI SIG BAW 56	1
D611	J707389P1	DIO SI SIG BAV 99	1

Pos	Code No	Description	Qt
L100	K805653G2	COIL ASM 2 1/2T	1
L101	A700024P1	COIL RF FIX 0.1UH 10%	1
L102	K805653G2	COIL ASM 2 1/2T	1
L103	J707256P2	COIL FIX	1
L104	K805653G2	COIL ASM 2 1/2T	1
L105	J707256P2	COIL FIX	1
L106	K805653G1	COIL ASM 1 1/2T	1
L107	A701237P1	COIL	1
L108	J707339G1	COIL FIX ASM	1
L109	A700024P1	COIL RF FIX 0.1UH 10% G1/G2/G3	1
L110	J707339G1	COIL FIX ASM G1/G2/G3	1
L111	A701237P1	COIL G1/G2/G3	1
L112	J709287P1	CORE TOR FERR	1
L113	A700024P1	COIL RF FIX 0.1UH 10%	1
L114	J707339G1	COIL FIX ASM	1
L115	A701237P1	COIL G1/G2/G3	1
L115	A701237P3	COIL FIX G4/G5/G6	1
L116	J708561P4	COIL FIXED	1
L117	A700024P3	COIL RF FIX 0.15UH 10%	1
L118	J709603P1	COIL	1
L119	J709603P1	COIL	1
L120	J709603P1	COIL	1
L121	A700024P25	COIL RF FIX 10UH 10%	1
L122	A700024P25	COIL RF FIX 10UH 10%	1
L123	J709287P1	CORE TOR FERR	1
L301	J707256P2	COIL FIX	1
L302	J707256P2	COIL FIX	1
L303	K805627G1	COIL RF FIXED 1 1/2T	1
L304	K805627G1	COIL RF FIXED 1 1/2T	1
L305	J707486P11	COIL RF FIX 2.2UH 10%	1
L306	K805627G1	COIL RF FIXED 1 1/2T	1
L307	K805627G1	COIL RF FIXED 1 1/2T	1
L308	K805627G1	COIL RF FIXED 1 1/2T	1
L309	K805627G1	COIL RF FIXED 1 1/2T	1
L311	K805627G1	COIL RF FIXED 1 1/2T	1
L312	J708428P2	COIL RF VAR 45 MHZ	1
L401	J707486P10	COIL RF FIX 1.5UH 10%	1

Pos	Code No	Description	Qt
L403	K805570G2	COIL ASM	1
L404	K805570G1	COIL ASM	1
L405	J708428P1	COIL RF VAR 45 MHZ	1
L406	K805570G3	COIL ASM	1
L407	A700024P25	COIL RF FIX 10UH 10%	1
L408	J708428P2	COIL RF VAR 45 MHZ	1
L409	J707431P1	COIL RF VAR 455KHZ 25%	1
L410	J707431P1	COIL RF VAR 455KHZ 25%	1
L501	A700024P13	COIL RF FIX 1.0UH 10%	1
L502	A700024P13	COIL RF FIX 1.0UH 10%	1
L503	A700024P13	COIL RF FIX 1.0UH 10%	1
L504	A700024P13	COIL RF FIX 1.0UH 10%	1
L505	L855671P1	COIL RADIO FREQUENCY	1
L506	A700024P13	COIL RF FIX 1.0UH 10%	1
L507	A700024P13	COIL RF FIX 1.0UH 10%	1
L508	A700024P1	COIL RF FIX 0.1UH 10%	1
L509	K805527G1	COIL ASM	1
L510	J707256P3	COIL FIX	1
L511	J707256P3	COIL FIX	1
L512	K805653G1	COIL ASM 1 1/2T	1
L513	K805653G3	COIL ASM 3 1/2T	1
L601	A700024P13	COIL RF FIX 1.0UH 10%	1
L602	A700024P13	COIL RF FIX 1.0UH 10%	1
L603	A700024P13	COIL RF FIX 1.0UH 10%	1
L604	A700024P13	COIL RF FIX 1.0UH 10%	1
L605	L855671P1	COIL RADIO FREQUENCY	1
L606	A700024P13	COIL RF FIX 1.0UH 10%	1
L607	A700024P13	COIL RF FIX 1.0UH 10%	1
L608	A700024P1	COIL RF FIX 0.1UH 10%	1
L609	K805653G6	COIL ASM 6 1/2T	1
L610	A700024P29	COIL RF FIX 22UH 10%	1
P102	J707064P112	CONN PWB FEM 12-CKT	1
P105	A701883P4	CONN PWB FEM RECP	1
Q100	J707388P1	TSTR NPN SI BFR 53	1
Q101	J707388P1	TSTR NPN SI BFR 53	1
Q102	A701940P1	TSTR NPN SI RF-PWR 0.4W	1
Q103	A700066P2	TSTR NPN SI RF-PWR 2.0W	1

DATE: 9/23/1987

Pos	Code No	Description	Qt
Q104	J708167P2	TSTR NPN SI RF-PWR 23W	1
Q105	J708556P1	TSTR NPN SI RF-PWR 28W	1
Q106	J707432P1	TSTR PNP SI BCX 18	1
Q107	J707386P1	TSTR NPN SI BCW 32	1
Q108	J708406P1	TSTR NPN SI BD 233	1
Q201	J707435P1	TSTR PNP SI BC 369	1
Q202	J707386P1	TSTR NPN SI BCW 32	1
Q203	J707432P1	TSTR PNP SI BCX 18	1
Q204	J707386P1	TSTR NPN SI BCW 32	1
Q301	J706011P2	TSTR NPN SI BFR 91A	1
Q302	J708315P1	TSTR JFET SI 2N5245	1
Q401	J707817P1	TSTR JFET SI J 309	1
Q402	J707817P1	TSTR JFET SI J 309	1
Q403	J707419P1	TSTR JFET SI BF511	1
Q404	J708418P1	TSTR NPN SI BFS 20	1
Q405	J708418P1	TSTR NPN SI BFS 20	1
Q406	J708418P1	TSTR NPN SI BFS 20	1
Q407	J707386P1	TSTR NPN SI BCW 32	1
Q408	J707387P1	TSTR PNP SI BCW 30	1
Q501	J707817P1	TSTR JFET SI J 309	1
Q502	J707388P1	TSTR NPN SI BFR 53	1
Q503	J707388P1	TSTR NPN SI BFR 53	1
Q504	J708318P1	TSTR PNP SI BFT 92	1
Q601	J707817P1	TSTR JFET SI J 309	1
Q602	J707388P1	TSTR NPN SI BFR 53	1
Q603	J707388P1	TSTR NPN SI BFR 53	1
Q604	J708318P1	TSTR PNP SI BFT 92	1
Q605	J707386P1	TSTR NPN SI BCW 32	1
Q606	J707386P1	TSTR NPN SI BCW 32	1
Q607	J707386P1	TSTR NPN SI BCW 32	1
Q608	J707433P1	TSTR MFET SI BF 989	1
Q609	J707419P1	TSTR JFET SI BF511	1
R000	J707385P332	RES MFLM 1/8W 3K3 5%	1
R100	J707385P152	RES MFLM 1/8W 1K5 5%	1
R101	J707385P562	RES MFLM 1/8W 5K6 5%	1
R102	J707385P470	RES MFLM 1/8W 47R 5%	1
R103	J707385P152	RES MFLM 1/8W 1K5 5%	1

Pos	Code No	Description	Qt
R104	J707385P562	RES MFLM 1/8W 5K6 5%	1
R105	J707385P270	RES MFLM 1/8W 27R 5%	1
R106	J707385P270	RES MFLM 1/8W 27R 5%	1
R107	J707385P102	RES MFLM 1/8W 1KO 5%	1
R108	J707385P100	RES MFLM 1/8W 10R 5%	1
R109	J707385P100	RES MFLM 1/8W 10R 5%	1
R110	J707385P947	RES MFLM 1/8W 4R7 20%	1
R111	J707385P102	RES MFLM 1/8W 1KO 5%	1
R112	J707385P270	RES MFLM 1/8W 27R 5%	1
R113	J707385P100	RES MFLM 1/8W 10R 5% G1/G2/G3	1
R114	J707385P100	RES MFLM 1/8W 10R 5% G1/G2/G3	1
R115	J707385P100	RES MFLM 1/8W 10R 5%	1
R116	J707385P100	RES MFLM 1/8W 10R 5%	1
R117	J707385P100	RES MFLM 1/8W 10R 5%	1
R119	J707385P473	RES MFLM 1/8W 47K 5%	1
R120	J707385P473	RES MFLM 1/8W 47K 5%	1
R121	J707385P221	RES MFLM 1/8W 220R 5% G1/G2/G3	1
R121	J707385P102	RES MFLM 1/8W 1KO 5% G4/G5/G6	1
R122	J707385P221	RES MFLM 1/8W 220R 5% G1/G2/G3	1
R122	J707385P102	RES MFLM 1/8W 1KO 5% G4/G5/G6	1
R123	J707385P220	RES MFLM 1/8W 22R 5%	1
R124	J707385P220	RES MFLM 1/8W 22R 5%	1
R125	J707385P391	RES MFLM 1/8W 390R 5% G1/G2/G3	1
R126	J707385P391	RES MFLM 1/8W 390R 5% G1/G2/G3	1
R127	J707385P101	RES MFLM 1/8W 100R 5% G1/G2/G3	1
R130	J707385P103	RES MFLM 1/8W 10K 5%	1
R131	J707385P472	RES MFLM 1/8W 4K7 5%	1
R132	J708538P9	RES VAR CERM 200K 20%	1
R133	J708538P4	RES VAR CERM 5KO 20%	1
R134	J707385P100	RES MFLM 1/8W 10R 5%	1
R135	J706147P2	RES THERM PTC 80R 25% G1/G2/G3	1
R136	J707385P153	RES MFLM 1/8W 15K 5% G1/G2/G3	1
R136	J707385P101	RES MFLM 1/8W 100R 5% G4/G5/G6	1
R137	J707385P473	RES MFLM 1/8W 47K 5%	1
R138	J707385P333	RES MFLM 1/8W 33K 5%	1
R139	J707385P333	RES MFLM 1/8W 33K 5%	1
R140	J707385P104	RES MFLM 1/8W 100K 5%	1

Pos	Code No	Description	Qt
R141	J707385P222	RES MFLM 1/8W 2K2 5%	1
R142	J707385P222	RES MFLM 1/8W 2K2 5%	1
R143	J707385P104	RES MFLM 1/8W 100K 5%	1
R144	J707385P682	RES MFLM 1/8W 6K8 5%	1
R145	J707385P473	RES MFLM 1/8W 47K 5%	1
R146	J707385P472	RES MFLM 1/8W 4K7 5%	1
R147	J707385P123	RES MFLM 1/8W 12K 5%	1
R148	J707385P331	RES MFLM 1/8W 330R 5%	1
R149	J707385P683	RES MFLM 1/8W 68K 5%	1
R150	J707385P104	RES MFLM 1/8W 100K 5%	1
R151	J707385P274	RES MFLM 1/8W 270K 5%	1
R152	J707385P562	RES MFLM 1/8W 5K6 5%	1
R153	J707385P222	RES MFLM 1/8W 2K2 5%	1
R154	J707385P102	RES MFLM 1/8W 1K0 5%	1
R155	J707385P472	RES MFLM 1/8W 4K7 5%	1
R201	J707385P561	RES MFLM 1/8W 560R 5%	1
R202	J707385P271	RES MFLM 1/8W 270R 5%	1
R203	J707385P153	RES MFLM 1/8W 15K 5%	1
R204	J707385P153	RES MFLM 1/8W 15K 5%	1
R205	J707385P472	RES MFLM 1/8W 4K7 5%	1
R206	J707385P272	RES MFLM 1/8W 2K7 5%	1
R207	J707385P563	RES MFLM 1/8W 56K 5%	1
R208	J707385P563	RES MFLM 1/8W 56K 5%	1
R209	J707385P271	RES MFLM 1/8W 270R 5%	1
R301	J707385P473	RES MFLM 1/8W 47K 5%	1
R302	J707385P221	RES MFLM 1/8W 220R 5%	1
R303	J707385P104	RES MFLM 1/8W 100K 5%	1
R304	J707385P104	RES MFLM 1/8W 100K 5%	1
R306	J707385P222	RES MFLM 1/8W 2K2 5%	1
R307	J707385P681	RES MFLM 1/8W 680R 5%	1
R308	J707385P560	RES MFLM 1/8W 56R 5%	1
R309	J707385P270	RES MFLM 1/8W 27R 5%	1
R310	J707385P104	RES MFLM 1/8W 100K 5%	1
R311	J707385P270	RES MFLM 1/8W 27R 5%	1
R312	J707385P104	RES MFLM 1/8W 100K 5%	1
R313	J707385P104	RES MFLM 1/8W 100K 5%	1
R314	J707385P104	RES MFLM 1/8W 100K 5%	1

Pos	Code No	Description	Qt
R315	J707385P104	RES MFLM 1/8W 100K 5%	1
R316	J707385P104	RES MFLM 1/8W 100K 5%	1
R317	J707385P272	RES MFLM 1/8W 2K7 5%	1
R318	J707385P100	RES MFLM 1/8W 10R 5%	1
R319	J707385P101	RES MFLM 1/8W 100R 5%	1
R320	J707385P103	RES MFLM 1/8W 10K 5%	1
R321	J707385P270	RES MFLM 1/8W 27R 5%	1
R322	J707385P104	RES MFLM 1/8W 100K 5%	1
R323	J707385P102	RES MFLM 1/8W 1K0 5%	1
R324	J707385P101	RES MFLM 1/8W 100R 5%	1
R401	J707385P560	RES MFLM 1/8W 56R 5%	1
R402	J707385P100	RES MFLM 1/8W 10R 5%	1
R403	J707385P332	RES MFLM 1/8W 3K3 5%	1
R405	J707385P100	RES MFLM 1/8W 10R 5%	1
R406	J707385P820	RES MFLM 1/8W 82R 5%	1
R407	J707385P470	RES MFLM 1/8W 47R 5%	1
R408	J707385P470	RES MFLM 1/8W 47R 5%	1
R410	J707385P272	RES MFLM 1/8W 2K7 5%	1
R411	J707385P682	RES MFLM 1/8W 6K8 5%	1
R412	J707385P272	RES MFLM 1/8W 2K7 5%	1
R413	J707385P821	RES MFLM 1/8W 820R 5%	1
R414	J707385P220	RES MFLM 1/8W 22R 5%	1
R415	J707385P222	RES MFLM 1/8W 2K2 5%	1
R416	J707385P562	RES MFLM 1/8W 5K6 5%	1
R417	J707385P103	RES MFLM 1/8W 10K 5%	1
R418	J707385P153	RES MFLM 1/8W 15K 5%	1
R419	J707385P182	RES MFLM 1/8W 1K8 5%	1
R420	J707385P182	RES MFLM 1/8W 1K8 5%	1
R421	J707385P182	RES MFLM 1/8W 1K8 5%	1
R422	J707385P473	RES MFLM 1/8W 47K 5%	1
R423	J707385P153	RES MFLM 1/8W 15K 5%	1
R424	J708538P5	RES VAR CERM 10K 20%	1
R425	J707385P272	RES MFLM 1/8W 2K7 5%	1
R426	J707385P563	RES MFLM 1/8W 56K 5%	1
R427	J707385P273	RES MFLM 1/8W 27K 5%	1
R428	J707385P683	RES MFLM 1/8W 68K 5%	1
R429	J707385P104	RES MFLM 1/8W 100K 5%	1

Pos	Code No	Description	Qt
R430	J707385P334	RES MFLM 1/8W 330K 5%	1
R431	J707385P473	RES MFLM 1/8W 47K 5%	1
R432	J707385P473	RES MFLM 1/8W 47K 5%	1
R433	J707385P271	RES MFLM 1/8W 270R 5%	1
R434	J707385P102	RES MFLM 1/8W 1KO 5%	1
R435	J706147P3	RES THERM PTC 250R 25%	1
R436	J707385P392	RES MFLM 1/8W 3K9 5%	1
R437	J707406P7	RES THERM NTC 220R 10%	1
R438	J707385P222	RES MFLM 1/8W 2K2 5%	1
R439	J707385P392	RES MFLM 1/8W 3K9 5%	1
R440	J707385P392	RES MFLM 1/8W 3K9 5%	1
R441	J707385P101	RES MFLM 1/8W 100R 5%	1
R442	J708538P6	RES VAR CERM 20K 20%	1
R444	J707385P473	RES MFLM 1/8W 47K 5%	1
R445	J707385P273	RES MFLM 1/8W 27K 5%	1
R446	J707385P224	RES MFLM 1/8W 220K 5%	1
R447	J707385P392	RES MFLM 1/8W 3K9 5%	1
R448	J707385P101	RES MFLM 1/8W 100R 5%	1
R449	J707385P470	RES MFLM 1/8W 47R 5%	1
R450	J707385P103	RES MFLM 1/8W 10K 5%	1
R451	J707385P332	RES MFLM 1/8W 3K3 5%	1
R501	J707385P122	RES MFLM 1/8W 1K2 5%	1
R502	J707385P122	RES MFLM 1/8W 1K2 5%	1
R503	J707385P122	RES MFLM 1/8W 1K2 5%	1
R504	J707385P104	RES MFLM 1/8W 100K 5%	1
R505	J707385P104	RES MFLM 1/8W 100K 5%	1
R506	J707385P104	RES MFLM 1/8W 100K 5%	1
R508	J707385P103	RES MFLM 1/8W 10K 5%	1
R509	J707385P100	RES MFLM 1/8W 10R 5%	1
R510	J707385P332	RES MFLM 1/8W 3K3 5%	1
R512	J707385P561	RES MFLM 1/8W 560R 5%	1
R513	J707385P183	RES MFLM 1/8W 18K 5%	1
R514	J707385P472	RES MFLM 1/8W 4K7 5%	1
R515	J707385P271	RES MFLM 1/8W 270R 5%	1
R517	J707385P101	RES MFLM 1/8W 100R 5%	1
R520	J707385P682	RES MFLM 1/8W 6K8 5%	1
R521	J707385P152	RES MFLM 1/8W 1K5 5%	1

Pos	Code No	Description	Qt
R522	J707385P680	RES MFLM 1/8W 68R 5%	1
R523	J707385P222	RES MFLM 1/8W 2K2 5%	1
R524	J707385P472	RES MFLM 1/8W 4K7 5%	1
R525	J707385P680	RES MFLM 1/8W 68R 5%	1
R526	J707385P104	RES MFLM 1/8W 100K 5%	1
R527	J707385P104	RES MFLM 1/8W 100K 5%	1
R528	J707385P103	RES MFLM 1/8W 10K 5%	1
R529	J707385P150	RES MFLM 1/8W 15R 5%	1
R530	J707385P182	RES MFLM 1/8W 1K8 5%	1
R531	J707385P682	RES MFLM 1/8W 6K8 5%	1
R532	J707385P392	RES MFLM 1/8W 3K9 5%	1
R601	J707385P122	RES MFLM 1/8W 1K2 5%	1
R602	J707385P122	RES MFLM 1/8W 1K2 5%	1
R603	J707385P122	RES MFLM 1/8W 1K2 5%	1
R604	J707385P104	RES MFLM 1/8W 100K 5%	1
R605	J707385P104	RES MFLM 1/8W 100K 5%	1
R606	J707385P104	RES MFLM 1/8W 100K 5%	1
R607	J707385P561	RES MFLM 1/8W 560R 5%	1
R608	J707385P221	RES MFLM 1/8W 220R 5%	1
R609	J707385P472	RES MFLM 1/8W 4K7 5%	1
R610	J707385P183	RES MFLM 1/8W 18K 5%	1
R611	J707385P271	RES MFLM 1/8W 270R 5%	1
R612	J707385P223	RES MFLM 1/8W 22K 5%	1
R613	J707385P101	RES MFLM 1/8W 100R 5%	1
R614	J707385P682	RES MFLM 1/8W 6K8 5%	1
R615	J707385P222	RES MFLM 1/8W 2K2 5%	1
R616	J707385P101	RES MFLM 1/8W 100R 5%	1
R617	J707385P101	RES MFLM 1/8W 100R 5%	1
R618	J707385P102	RES MFLM 1/8W 1KO 5%	1
R619	J707385P102	RES MFLM 1/8W 1KO 5%	1
R620	J707385P272	RES MFLM 1/8W 2K7 5%	1
R621	J707385P330	RES MFLM 1/8W 33R 5%	1
R622	J707385P102	RES MFLM 1/8W 1KO 5%	1
R623	J707385P123	RES MFLM 1/8W 12K 5%	1
R624	J707385P223	RES MFLM 1/8W 22K 5%	1
R625	J707385P470	RES MFLM 1/8W 47R 5%	1
R626	J707385P100	RES MFLM 1/8W 10R 5%	1

Pos	Code No	Description	Qt
R627	J707385P103	RES MFLM 1/8W 10K 5%	1
R628	J707385P224	RES MFLM 1/8W 220K 5%	1
R629	J707385P393	RES MFLM 1/8W 39K 5%	1
R629	J707385P823	RES MFLM 1/8W 82K 5% G3 ONLY	1
R630	J707385P100	RES MFLM 1/8W 10R 5%	1
R631	J707385P332	RES MFLM 1/8W 3K3 5% NOT IN G3	1
R632	J707385P393	RES MFLM 1/8W 39K 5%	1
R633	J707385P223	RES MFLM 1/8W 22K 5%	1
R634	J707385P470	RES MFLM 1/8W 47R 5%	1
R635	J707385P102	RES MFLM 1/8W 1K0 5%	1
R636	J707385P332	RES MFLM 1/8W 3K3 5%	1
R637	J707385P181	RES MFLM 1/8W 180R 5%	1
R638	J707385P154	RES MFLM 1/8W 150K 5%	1
R638	J707385P823	RES MFLM 1/8W 82K 5% G3 ONLY	1
R639	J707385P682	RES MFLM 1/8W 6K8 5%	1
R639	J707385P822	RES MFLM 1/8W 8K2 5% G3 ONLY	1
R640	J707385P105	RES MFLM 1/8W 1M0 10%	1
R641	J707385P184	RES MFLM 1/8W 180K 5%	1
R642	J707385P184	RES MFLM 1/8W 180K 5%	1
R643	J707385P105	RES MFLM 1/8W 1M0 10%	1
R644	J707385P224	RES MFLM 1/8W 220K 5%	1
R645	J707385P103	RES MFLM 1/8W 10K 5%	1
R646	J707385P472	RES MFLM 1/8W 4K7 5%	1
R647	J707385P333	RES MFLM 1/8W 33K 5%	1
R648	J707385P683	RES MFLM 1/8W 68K 5%	1
R649	J707385P104	RES MFLM 1/8W 100K 5%	1
R650	J707385P223	RES MFLM 1/8W 22K 5%	1
R651	J707385P104	RES MFLM 1/8W 100K 5%	1
R652	J707385P103	RES MFLM 1/8W 10K 5%	1
R653	J707385P333	RES MFLM 1/8W 33K 5%	1
R654	J707385P562	RES MFLM 1/8W 5K6 5%	1
R655	J707385P183	RES MFLM 1/8W 18K 5%	1
R656	J707385P393	RES MFLM 1/8W 39K 5%	1
R657	J707385P823	RES MFLM 1/8W 82K 5%	1
R658	J707385P154	RES MFLM 1/8W 150K 5%	1
R659	J707385P102	RES MFLM 1/8W 1K0 5%	1
R660	J707385P333	RES MFLM 1/8W 33K 5%	1

Pos	Code No	Description	Qt
R661	J707385P473	RES MFLM 1/8W 47K 5%	1
R662	J707385P393	RES MFLM 1/8W 39K 5%	1
R663	J708538P5	RES VAR CERM 10K 20%	1
R664	J707385P333	RES MFLM 1/8W 33K 5%	1
R665	J707385P824	RES MFLM 1/8W 820K 5%	1
R666	J707385P124	RES MFLM 1/8W 120K 5%	1
R667	J707385P124	RES MFLM 1/8W 120K 5%	1
R668	J707385P122	RES MFLM 1/8W 1K2 5%	1
R669	J707385P221	RES MFLM 1/8W 220R 5%	1
R670	J707385P103	RES MFLM 1/8W 10K 5%	1
R671	J707385P562	RES MFLM 1/8W 5K6 5%	1
R672	J707385P822	RES MFLM 1/8W 8K2 5%	1
R673	J707385P822	RES MFLM 1/8W 8K2 5%	1
R674	J707385P101	RES MFLM 1/8W 100R 5%	1
R675	J708538P5	RES VAR CERM 10K 20%	1
R676	J707385P123	RES MFLM 1/8W 12K 5%	1
R677	J708538P5	RES VAR CERM 10K 20%	1
R678	J707385P821	RES MFLM 1/8W 820R 5%	1
R679	J707385P683	RES MFLM 1/8W 68K 5%	1
R680	J708538P5	RES VAR CERM 10K 20%	1
R681	J707385P683	RES MFLM 1/8W 68K 5%	1
R682	J707385P561	RES MFLM 1/8W 560R 5%	1
R683	J707385P271	RES MFLM 1/8W 270R 5%	1
R684	J707385P105	RES MFLM 1/8W 1M0 10%	1
R685	J707385P183	RES MFLM 1/8W 18K 5%	1
R686	J707385P103	RES MFLM 1/8W 10K 5%	1
R687	J707385P183	RES MFLM 1/8W 18K 5%	1
R688	J707385P103	RES MFLM 1/8W 10K 5%	1
R689	J707385P124	RES MFLM 1/8W 120K 5%	1
R690	J707385P223	RES MFLM 1/8W 22K 5%	1
R691	J707385P223	RES MFLM 1/8W 22K 5%	1
R692	J707385P105	RES MFLM 1/8W 1M0 10%	1
R693	J707385P223	RES MFLM 1/8W 22K 5%	1
R694	J707385P223	RES MFLM 1/8W 22K 5%	1
R695	J707385P105	RES MFLM 1/8W 1M0 10%	1
R696	J707385P223	RES MFLM 1/8W 22K 5%	1
R697	J707385P223	RES MFLM 1/8W 22K 5%	1

DATE: 9/23/1987

Pos	Code No	Description	Qt
R698	J707385P105	RES MFLM 1/8W 1MO 10%	1
R699	J707385P273	RES MFLM 1/8W 27K 5%	1
R700	J707385P103	RES MFLM 1/8W 10K 5%	1
R701	J707385P824	RES MFLM 1/8W 820K 5%	1
R702	J707385P824	RES MFLM 1/8W 820K 5%	1
R703	J707385P154	RES MFLM 1/8W 150K 5%	1
R704	J707385P561	RES MFLM 1/8W 560R 5%	1
R705	J707385P122	RES MFLM 1/8W 1K2 5%	1
R706	J707385P561	RES MFLM 1/8W 560R 5%	1
U100	J708165P2	IC LIN OP-AMP 324	1
U201	J708333P1	IC LIN VR FIX 4785	1
U401	J707449P1	IC LIN IF-AMP 3357	1
U402	M905766G1	INT CKT SQ 4002 G1/G2/G4/G5	1
U402	M905766G2	INT CKT SQ 4003 G3/G6	1
U601	J707859P1	IC LIN OP-AMP 204	1
U602	J707859P1	IC LIN OP-AMP 204	1
U603	J707859P1	IC LIN OP-AMP 204	1
U604	J707859P1	IC LIN OP-AMP 204	1
U606	J707243P1	IC DIG REG 4094	1
U607	J707374P3	IC PLL PRESC 12017	1
U607	J707374P4	IC PLL PRESC 12018 G3 ONLY	1
U608	B800902P1	IC PLL SYN CUSTOM DES	1
U609	J707859P1	IC LIN OP-AMP 204	1
U610	J708503P2	IC LIN CMPAR LM 339	1
U615	J708621P2	CPLR OPTO PC 827	1
U616	J708503P2	IC LIN CMPAR LM 339	1
W004	J706451P1	WIRE STRAP	1
W1	A700184P1	RES WIRE JMPR OR JUMPER	1
W3	J707256P1	COIL FIX	1
W5	J708717P1	STRAP	1
W6	J708716P1	STRAP G1/G2/G3	1
Y401	J708426P1	CRYSTAL UNIT 44.5450MHZ	1
Z401	J708330P1	FLTR CRY 45.0 +/-7.5KHZ G1/G4	1
Z401	J708330P2	FLTR CRY 45.0 +/-7.5KHZ G2/G5	1
Z401	J708330P3	FLTR CRY 45.0 +/-7.5KHZ G3/G6	1
Z402	J707446P1	FLTR CER 455K +/-10KHZ G1/G4	1
Z402	J707446P3	FLTR CER 455K +/-10KHZ G2/G5	1

Pos	Code No	Description	Qt
Z402	J707446P4	FLTR CER 455K +/-10KHZ G3/G6	1
Z403	J707446P1	FLTR CER 455K +/-10KHZ G1/G4	1
Z403	J707446P3	FLTR CER 455K +/-10KHZ G2/G5	1
Z403	J707446P4	FLTR CER 455K +/-10KHZ G3/G6	1
	M905780P1R0	BD PW G1/G2/G3	1
	M905780P2R0	BD PW G4/G5/G6	1
		NON ELECTRONICAL PARTS	
	K805569G1	SHIELD METALLIZED	1
	J708966G1	HEAT SINK MODF	1
	J708561P3	COIL FIXED	1
	J708561P3	COIL FIXED	1

DATE: 3/17/1987

Pos	Code No	Description	Qt
C100	J707436P13	CAP CER NPO 10P 5%	1
C101	J707436P21	CAP CER NPO 15P 5%	1
C102	J707438P14	CAP CER CL2 10N 10%	1
C103	J707436P8	CAP CER NPO 3P9 .25P	1
C104	J707436P8	CAP CER NPO 3P9 .25P	1
C105	J707436P33	CAP CER NPO 27P 5%	1
C107	J707436P61	CAP CER NPO 100P 5%	1
C108	J707436P21	CAP CER NPO 15P 5%	1
C109	J707436P33	CAP CER NPO 27P 5%	1
C110	J707436P41	CAP CER NPO 39P 5%	1
C111	J707438P14	CAP CER CL2 10N 10%	1
C112	J707436P61	CAP CER NPO 100P 5%	1
C113	J707436P33	CAP CER NPO 27P 5%	1
C114	J707809P13	CAP CER NPO 10P 5%	1
C115	J707809P18	CAP CER NPO 27P 5%	1
C116	J707809P20	CAP CER NPO 39P 5%	1
C117	J707809P25	CAP CER NPO 100P 5%	1
C118	J707438P8	CAP CER CL2 3N3 10%	1
C119	J707809P25	CAP CER NPO 100P 5% G1/G2/G3	1
C120	J707809P21	CAP CER NPO 47P 5%	1
C121	A700006P19	CAP MICA 27P 5% G1/G2/G3	1
C122	A700006P19	CAP MICA 27P 5% G1/G2/G3	1
C123	J707809P25	CAP CER NPO 100P 5% G1/G2/G3	1
C124	J707438P14	CAP CER CL2 10N 10% G1/G2/G3	1
C126	A700006P11	CAP MICA 15P 5% G1/G2/G3	1
C127	A700006P11	CAP MICA 15P 5% G1/G2/G3	1
C128	J707809P14	CAP CER NPO 12P 5% G1/G2/G3	1
C128	J707809P13	CAP CER NPO 10P 5% G4/G5/G6	1
C129	J707809P14	CAP CER NPO 12P 5% G1/G2/G3	1
C129	J707809P13	CAP CER NPO 10P 5% G4/G5/G6	1
C130	A700006P19	CAP MICA 27P 5%	1
C131	A700006P19	CAP MICA 27P 5%	1
C132	J707809P27	CAP CER NPO 150P 5%	1
C133	J707438P14	CAP CER CL2 10N 10%	1
C134	A700006P26	CAP MICA 47P 5% G1/G2/G3	1
C134	A700006P28	CAP MICA 56P 5% G4/G5/G6	1
C135	A700006P26	CAP MICA 47P 5% G1/G2/G3	1

Pos	Code No	Description	Qt
C135	A700006P28	CAP MICA 56P 5% G4/G5/G6	1
C136	A700006P14	CAP MICA 18P 5%	1
C137	J707353P6	CAP ELECT 4U7 25V	1
C138	J707438P22	CAP CER CL2 47N 10%	1
C139	J707809P25	CAP CER NPO 100P 5%	1
C140	J707809P25	CAP CER NPO 100P 5%	1
C141	J707809P25	CAP CER NPO 100P 5%	1
C142	J707809P25	CAP CER NPO 100P 5%	1
C143	J707809P25	CAP CER NPO 100P 5%	1
C144	J707809P25	CAP CER NPO 100P 5%	1
C145	J707809P25	CAP CER NPO 100P 5%	1
C146	A700006P4	CAP PTFE 8P2 10%	1
C147	A700006P11	CAP MICA 15P 5%	1
C148	A700006P11	CAP MICA 15P 5%	1
C149	A700006P3	CAP PTFE 6P8 10%	1
C150	J707809P8	CAP CER NPO 3P9 .25P	1
C151	J707438P8	CAP CER CL2 3N3 10%	1
C152	J707436P61	CAP CER NPO 100P 5%	1
C153	J707809P1	CAP CER NPO 1P0 .25P	1
C154	J707809P1	CAP CER NPO 1P0 .25P	1
C155	J707809P25	CAP CER NPO 100P 5%	1
C160	J707436P61	CAP CER NPO 100P 5%	1
C161	J707436P61	CAP CER NPO 100P 5%	1
C162	J707353P3	CAP ELECT 0U47 50V	1
C163	J707436P61	CAP CER NPO 100P 5%	1
C164	J707438P20	CAP CER CL2 33N 10%	1
C165	J707438P14	CAP CER CL2 10N 10%	1
C166	J707436P61	CAP CER NPO 100P 5%	1
C167	J707436P61	CAP CER NPO 100P 5%	1
C168	J707438P14	CAP CER CL2 10N 10%	1
C169	J707438P26	CAP CER CL2 100N 10%	1
C170	J707436P61	CAP CER NPO 100P 5%	1
C171	J707436P61	CAP CER NPO 100P 5%	1
C201	J707438P26	CAP CER CL2 100N 10%	1
C202	J707444P8	CAP TA SOL 22U 16V	1
C203	J707444P6	CAP TA SOL 4U7 35V	1
C204	J707438P3	CAP CER CL2 470P 10%	1

DATE: 3/17/1987

Pos	Code No	Description	Qt
C301	J707809P25	CAP CER NPO 100P 5%	1
C302	J707809P15	CAP CER NPO 15P 5%	1
C303	J707809P15	CAP CER NPO 15P 5%	1
C304	J708287P1	CAP VAR CER 3.3/8 PF	1
C305	J707436P10	CAP CER NPO 5P6 .25P	1
C306	J707483P6	CAP PHEN 0P82 5%	1
C307	J707436P61	CAP CER NPO 100P 5%	1
C308	J707436P11	CAP CER NPO 6P8 .25P	1
C309	J708287P1	CAP VAR CER 3.3/8 PF	1
C310	J707438P3	CAP CER CL2 470P 10%	1
C311	J707436P37	CAP CER NPO 33P 5%	1
C312	J707436P69	CAP CER NPO 220P 5%	1
C313	J707438P3	CAP CER CL2 470P 10%	1
C314	J707436P5	CAP CER NPO 2P2 .25P	1
C315	J707436P12	CAP CER NPO 8P2 .25P	1
C316	J708287P1	CAP VAR CER 3.3/8 PF	1
C317	J707444P2	CAP TA SOL 0U22 35V	1
C318	J707438P3	CAP CER CL2 470P 10%	1
C319	J707436P11	CAP CER NPO 6P8 .25P	1
C320	J707438P3	CAP CER CL2 470P 10%	1
C321	J708287P1	CAP VAR CER 3.3/8 PF	1
C322	J707483P4	CAP PHEN 0P56 5%	1
C323	J707483P4	CAP PHEN 0P56 5%	1
C324	J707436P11	CAP CER NPO 6P8 .25P	1
C325	J707438P3	CAP CER CL2 470P 10%	1
C326	J708287P1	CAP VAR CER 3.3/8 PF	1
C327	J707436P11	CAP CER NPO 6P8 .25P	1
C328	J707483P1	CAP PHEN 0P47 5%	1
C329	J707436P10	CAP CER NPO 5P6 .25P	1
C330	J708287P1	CAP VAR CER 3.3/8 PF	1
C331	J707436P6	CAP CER NPO 2P7 .25P	1
C332	J708287P1	CAP VAR CER 3.3/8 PF	1
C333	J707436P12	CAP CER NPO 8P2 .25P	1
C334	J707483P2	CAP PHEN 0P33 5%	1
C335	J707438P3	CAP CER CL2 470P 10%	1
C336	J708287P1	CAP VAR CER 3.3/8 PF	1
C337	J707436P12	CAP CER NPO 8P2 .25P	1

Pos	Code No	Description	Qt
C338	J707436P11	CAP CER NPO 6P8 .25P	1
C339	J707438P14	CAP CER CL2 10N 10%	1
C340	J707438P14	CAP CER CL2 10N 10%	1
C341	J707438P3	CAP CER CL2 470P 10%	1
C342	J708287P1	CAP VAR CER 3.3/8 PF	1
C343	J707436P13	CAP CER NPO 10P 5%	1
C344	J707438P3	CAP CER CL2 470P 10%	1
C345	J707436P37	CAP CER NPO 33P 5%	1
C347	J707438P3	CAP CER CL2 470P 10%	1
C348	J707438P3	CAP CER CL2 470P 10%	1
C349	J707436P4	CAP CER NPO 1P8 .25P	1
C350	J707438P3	CAP CER CL2 470P 10%	1
C401	J707438P8	CAP CER CL2 3N3 10%	1
C402	J707438P8	CAP CER CL2 3N3 10%	1
C403	J707438P8	CAP CER CL2 3N3 10%	1
C404	J707436P9	CAP CER NPO 4P7 .25P	1
C405	J707438P26	CAP CER CL2 100N 10%	1
C406	J707436P10	CAP CER NPO 5P6 .25P	1
C407	J707436P9	CAP CER NPO 4P7 .25P	1
C408	J707438P5	CAP CER CL2 1N 10%	1
C409	J707438P8	CAP CER CL2 3N3 10%	1
C410	J707444P8	CAP TA SOL 22U 16V	1
C411	J707438P26	CAP CER CL2 100N 10%	1
C412	J707438P26	CAP CER CL2 100N 10%	1
C413	J707436P21	CAP CER NPO 15P 5%	1
C414	J707438P8	CAP CER CL2 3N3 10%	1
C415	J707438P8	CAP CER CL2 3N3 10%	1
C416	J708702P16	CAP CER N750 18P 5%	1
C417	J707436P49	CAP CER NPO 56P 5%	1
C418	J707438P14	CAP CER CL2 10N 10%	1
C419	J707438P26	CAP CER CL2 100N 10%	1
C420	J707438P14	CAP CER CL2 10N 10%	1
C421	J707438P26	CAP CER CL2 100N 10%	1
C422	J707438P26	CAP CER CL2 100N 10%	1
C423	J707436P13	CAP CER NPO 10P 5%	1
C424	J707438P8	CAP CER CL2 3N3 10%	1
C425	J707412P13	CAP PYES 470N 10%	1

DATE: 3/17/1987

Pos	Code No	Description	Qt
C426	J707436P93	CAP CER NPO 2N2 5%	1
C427	J707436P73	CAP CER NPO 330P 5%	1
C428	J707436P73	CAP CER NPO 330P 5%	1
C429	J707438P14	CAP CER CL2 10N 10%	1
C430	J707444P8	CAP TA SOL 22U 16V	1
C431	J707444P8	CAP TA SOL 22U 16V	1
C432	J707438P26	CAP CER CL2 100N 10%	1
C433	J707438P26	CAP CER CL2 100N 10%	1
C434	J707438P8	CAP CER CL2 3N3 10%	1
C435	J707436P1	CAP CER NPO 1P0 .25P	1
C436	J707438P26	CAP CER CL2 100N 10%	1
C501	J707412P11	CAP PYES 220N 10%	1
C502	J707412P11	CAP PYES 220N 10%	1
C503	J707412P11	CAP PYES 220N 10%	1
C504	A700235P3	CAP CER N150 1P5 .25P	1
C505	A700235P3	CAP CER N150 1P5 .25P	1
C506	A700235P6	CAP CER N150 2P7 .25P	1
C507	A700235P5	CAP CER N150 2P2 .25P	1
C508	A700235P10	CAP CER N150 5P6 .25P	1
C509	A700235P12	CAP CER N150 8P2 .25P	1
C510	A700235P9	CAP CER N150 4P7 .25P	1
C512	J707483P7	CAP PHEN 1P00 5%	1
C513	J707438P3	CAP CER CL2 470P 10%	1
C515	J707436P9	CAP CER NPO 4P7 .25P	1
C516	J707436P7	CAP CER NPO 3P3 .25P	1
C517	J707444P6	CAP TA SOL 4U7 35V	1
C518	J707436P6	CAP CER NPO 2P7 .25P	1
C519	J707438P3	CAP CER CL2 470P 10%	1
C520	J707436P8	CAP CER NPO 3P9 .25P	1
C521	J707436P9	CAP CER NPO 4P7 .25P	1
C522	J707438P3	CAP CER CL2 470P 10%	1
C523	J707436P5	CAP CER NPO 2P2 .25P	1
C525	J707438P3	CAP CER CL2 470P 10%	1
C526	J707436P17	CAP CER NPO 12P 5%	1
C527	J707438P3	CAP CER CL2 470P 10%	1
C528	J707436P65	CAP CER NPO 150P 5%	1
C529	J708287P1	CAP VAR CER 3.3/8 PF	1

Pos	Code No	Description	Qt
C530	J707436P10	CAP CER NPO 5P6 .25P	1
C531	J707483P7	CAP PHEN 1P00 5%	1
C532	J707436P10	CAP CER NPO 5P6 .25P	1
C533	J708287P1	CAP VAR CER 3.3/8 PF	1
C534	J707436P7	CAP CER NPO 3P3 .25P	1
C535	J707436P7	CAP CER NPO 3P3 .25P	1
C536	J707438P3	CAP CER CL2 470P 10%	1
C537	J707438P3	CAP CER CL2 470P 10%	1
C538	J707438P3	CAP CER CL2 470P 10%	1
C539	J707438P3	CAP CER CL2 470P 10%	1
C540	J707438P3	CAP CER CL2 470P 10%	1
C541	J707438P3	CAP CER CL2 470P 10%	1
C542	J707438P3	CAP CER CL2 470P 10%	1
C543	J707438P3	CAP CER CL2 470P 10%	1
C544	J707438P3	CAP CER CL2 470P 10%	1
C545	J707438P3	CAP CER CL2 470P 10%	1
C601	J707412P11	CAP PYES 220N 10%	1
C602	J707412P11	CAP PYES 220N 10%	1
C603	J707412P11	CAP PYES 220N 10%	1
C604	A700235P5	CAP CER N150 2P2 .25P	1
C605	A700235P3	CAP CER N150 1P5 .25P	1
C606	A700235P8	CAP CER N150 3P9 .25P	1
C607	A700235P9	CAP CER N150 4P7 .25P	1
C608	A700235P12	CAP CER N150 8P2 .25P	1
C609	A700235P33	CAP CER N150 13P 5%	1
C610	A700235P12	CAP CER N150 8P2 .25P	1
C611	J707436P7	CAP CER NPO 3P3 .25P	1
C612	J707436P9	CAP CER NPO 4P7 .25P	1
C613	J707444P6	CAP TA SOL 4U7 35V	1
C614	J707436P6	CAP CER NPO 2P7 .25P	1
C615	J707436P77	CAP CER NPO 470P 5%	1
C616	J707438P3	CAP CER CL2 470P 10%	1
C617	J707436P7	CAP CER NPO 3P3 .25P	1
C618	J707436P9	CAP CER NPO 4P7 .25P	1
C619	J707438P3	CAP CER CL2 470P 10%	1
C620	J707436P1	CAP CER NPO 1P0 .25P	1
C621	J707438P3	CAP CER CL2 470P 10%	1

DATE: 3/17/1987

Pos	Code No	Description	Qt
C622	J707438P3	CAP CER CL2 470P 10%	1
C623	J707438P3	CAP CER CL2 470P 10%	1
C624	J707436P65	CAP CER NPO 150P 5%	1
C625	J707436P29	CAP CER NPO 22P 5%	1
C626	J707438P5	CAP CER CL2 1N 10%	1
C627	J707438P14	CAP CER CL2 10N 10%	1
C628	J707436P89	CAP CER NPO 1N5 5%	1
C629	J707436P65	CAP CER NPO 150P 5%	1
C630	J707438P26	CAP CER CL2 100N 10%	1
C632	J707438P26	CAP CER CL2 100N 10%	1
C633	J707444P17	CAP TA SOL 47U 10V	1
C634	J707438P26	CAP CER CL2 100N 10%	1
C635	J707438P3	CAP CER CL2 470P 10%	1
C636	J707444P17	CAP TA SOL 47U 10V	1
C637	J707438P26	CAP CER CL2 100N 10%	1
C639	J707438P8	CAP CER CL2 3N3 10%	1
C640	J707412P9	CAP PYES 100N 10%	1
C641	J707412P13	CAP PYES 470N 10%	1
C642	J707412P13	CAP PYES 470N 10%	1
C643	J707438P22	CAP CER CL2 47N 10%	1
C644	J707436P6	CAP CER NPO 2P7 .25P	1
C645	J707436P69	CAP CER NPO 220P 5%	1
C647	J707436P13	CAP CER NPO 10P 5%	1
C648	J707436P69	CAP CER NPO 220P 5%	1
C653	J707444P6	CAP TA SOL 4U7 35V	1
C656	J707436P77	CAP CER NPO 470P 5%	1
C657	J707438P3	CAP CER CL2 470P 10%	1
C658	J707438P14	CAP CER CL2 10N 10%	1
C659	J707438P5	CAP CER CL2 1N 10%	1
C660	J707438P3	CAP CER CL2 470P 10%	1
C661	J707438P3	CAP CER CL2 470P 10%	1
C662	J707438P3	CAP CER CL2 470P 10%	1
C663	J707438P3	CAP CER CL2 470P 10%	1
C664	J707438P26	CAP CER CL2 100N 10%	1
C665	J707438P3	CAP CER CL2 470P 10%	1
C666	J707438P3	CAP CER CL2 470P 10%	1
C667	J707438P3	CAP CER CL2 470P 10%	1

Pos	Code No	Description	Qt
C668	J707438P12	CAP CER CL2 6N8 5%	1
C669	J707436P61	CAP CER NPO 100P 5%	1
C670	J707436P17	CAP CER NPO 12P 5%	1
C671	J707438P26	CAP CER CL2 100N 10%	1
D100	J706892P2	DIO SI PIN UM 9678	1
D101	A700047P3	DIO SI SIG 1N6263	1
D102	J707390P1	DIO SI SIG BAV 74	1
D301	J706892P2	DIO SI PIN UM 9678	1
D302	J706007P1	DIO SI CAP BB505B	1
D303	J706007P1	DIO SI CAP BB505B	1
D304	A700047P3	DIO SI SIG 1N6263	1
D305	J706007P1	DIO SI CAP BB505B	1
D306	J706007P1	DIO SI CAP BB505B	1
D307	J706007P1	DIO SI CAP BB505B	1
D308	J706007P1	DIO SI CAP BB505B	1
D309	J706007P1	DIO SI CAP BB505B	1
D310	J706007P1	DIO SI CAP BB505B	1
D311	J706007P1	DIO SI CAP BB505B	1
D401	A700025P8	DIO SI ZENR 6V8 5% 0.4W	1
D501	J706007P1	DIO SI CAP BB505B	1
D502	J706007P1	DIO SI CAP BB505B	1
D503	J706007P1	DIO SI CAP BB505B	1
D504	J706007P1	DIO SI CAP BB505B	1
D505	J707769P2	DIO SI CAP BBY 31	1
D506	J707390P1	DIO SI SIG BAV 74	1
D507	J707769P1	DIO SI CAP BBY 31	1
D508	J707769P1	DIO SI CAP BBY 31	1
D601	J706007P1	DIO SI CAP BB505B	1
D602	J706007P1	DIO SI CAP BB505B	1
D603	J706007P1	DIO SI CAP BB505B	1
D604	J706007P1	DIO SI CAP BB505B	1
D605	J707390P1	DIO SI SIG BAV 74	1
D606	J708681P1	DIO SI SIG BAW 56	1
D607	J707390P1	DIO SI SIG BAV 74	1
D608	J707390P1	DIO SI SIG BAV 74	1
D610	J708681P1	DIO SI SIG BAW 56	1
D611	J707389P1	DIO SI SIG BAV 99	1

DATE: 3/17/1987

Pos	Code No	Description	Qt
L100	K805653G2	COIL ASM 2 1/2T	1
L101	A700024P1	COIL RF FIX 0.1UH 10%	1
L102	K805653G2	COIL ASM 2 1/2T	1
L103	J707256P2	COIL FIX	1
L104	K805653G2	COIL ASM 2 1/2T	1
L105	J707256P2	COIL FIX	1
L106	K805653G1	COIL ASM 1 1/2T	1
L107	A701237P1	COIL	1
L108	J707339G1	COIL FIX ASM	1
L109	A700024P1	COIL RF FIX 0.1UH 10% G1/G2/G3	1
L110	J707339G1	COIL FIX ASM G1/G2/G3	1
L111	A701237P1	COIL G1/G2/G3	1
L112	J709287P1	CORE TOR FERR	1
L113	A700024P1	COIL RF FIX 0.1UH 10%	1
L114	J707339G1	COIL FIX ASM	1
L115	A701237P1	COIL G1/G2/G3	1
L115	A701237P3	COIL FIX G4/G5/G6	1
L116	J708561P4	COIL FIXED	1
L117	A700024P3	COIL RF FIX 0.15UH 10%	1
L118	J709603P1	COIL	1
L119	J709603P1	COIL	1
L120	J709603P1	COIL	1
L121	A700024P25	COIL RF FIX 10UH 10%	1
L122	A700024P25	COIL RF FIX 10UH 10%	1
L123	J709287P1	CORE TOR FERR	1
L301	J707256P2	COIL FIX	1
L302	J707256P2	COIL FIX	1
L303	K805627G1	COIL RF FIXED 1 1/2T	1
L304	K805627G1	COIL RF FIXED 1 1/2T	1
L305	J707486P11	COIL RF FIX 2.2UH 10%	1
L306	K805627G1	COIL RF FIXED 1 1/2T	1
L307	K805627G1	COIL RF FIXED 1 1/2T	1
L308	K805627G1	COIL RF FIXED 1 1/2T	1
L309	K805627G1	COIL RF FIXED 1 1/2T	1
L311	K805627G1	COIL RF FIXED 1 1/2T	1
L312	J708428P2	COIL RF VAR 45 MHZ	1
L401	J707486P10	COIL RF FIX 1.5UH 10%	1

Pos	Code No	Description	Qt
L403	K805570G2	COIL ASM	1
L404	K805570G1	COIL ASM	1
L405	J708428P1	COIL RF VAR 45 MHZ	1
L406	K805570G3	COIL ASM	1
L407	A700024P25	COIL RF FIX 10UH 10%	1
L408	J708428P2	COIL RF VAR 45 MHZ	1
L409	J707431P1	COIL RF VAR 455KHZ 25%	1
L410	J707431P1	COIL RF VAR 455KHZ 25%	1
L501	A700024P13	COIL RF FIX 1.0UH 10%	1
L502	A700024P13	COIL RF FIX 1.0UH 10%	1
L503	A700024P13	COIL RF FIX 1.0UH 10%	1
L504	A700024P13	COIL RF FIX 1.0UH 10%	1
L505	L855671P1	COIL RADIO FREQUENCY	1
L506	A700024P13	COIL RF FIX 1.0UH 10%	1
L507	A700024P13	COIL RF FIX 1.0UH 10%	1
L508	A700024P1	COIL RF FIX 0.1UH 10%	1
L509	K805527G1	COIL ASM	1
L510	J707256P3	COIL FIX	1
L511	J707256P3	COIL FIX	1
L512	K805653G1	COIL ASM 1 1/2T	1
L513	K805653G3	COIL ASM 3 1/2T	1
L601	A700024P13	COIL RF FIX 1.0UH 10%	1
L602	A700024P13	COIL RF FIX 1.0UH 10%	1
L603	A700024P13	COIL RF FIX 1.0UH 10%	1
L604	A700024P13	COIL RF FIX 1.0UH 10%	1
L605	L855671P1	COIL RADIO FREQUENCY	1
L606	A700024P13	COIL RF FIX 1.0UH 10%	1
L607	A700024P13	COIL RF FIX 1.0UH 10%	1
L608	A700024P1	COIL RF FIX 0.1UH 10%	1
L609	K805653G6	COIL ASM 6 1/2T	1
L610	A700024P29	COIL RF FIX 22UH 10%	1
P102	J707064P112	CONN PWB FEM 12-CKT	1
P105	A701883P4	CONN PWB FEM RECP	1
Q100	J707388P1	TSTR NPN SI BFR 53	1
Q101	J707388P1	TSTR NPN SI BFR 53	1
Q102	A701940P1	TSTR NPN SI RF-PWR 0.4W	1
Q103	A700066P2	TSTR NPN SI RF-PWR 2.0W	1

DATE: 3/17/1987

Pos	Code No	Description	Qt
Q104	J708167P2	TSTR NPN SI RF-PWR 23W	1
Q105	J708556P1	TSTR NPN SI RF-PWR 28W	1
Q106	J707432P1	TSTR PNP SI BCX 18	1
Q107	J707386P1	TSTR NPN SI BCW 32	1
Q108	J708406P1	TSTR NPN SI BD 233	1
Q201	J707435P1	TSTR PNP SI BC 369	1
Q202	J707386P1	TSTR NPN SI BCW 32	1
Q203	J707432P1	TSTR PNP SI BCX 18	1
Q204	J707386P1	TSTR NPN SI BCW 32	1
Q301	J706011P2	TSTR NPN SI BFR 91A	1
Q302	J708315P1	TSTR JFET SI 2N5245	1
Q401	J707817P1	TSTR JFET SI J 309	1
Q402	J707817P1	TSTR JFET SI J 309	1
Q403	J707419P1	TSTR JFET SI BF511	1
Q404	J708418P1	TSTR NPN SI BFS 20	1
Q405	J708418P1	TSTR NPN SI BFS 20	1
Q406	J708418P1	TSTR NPN SI BFS 20	1
Q407	J707386P1	TSTR NPN SI BCW 32	1
Q408	J707387P1	TSTR PNP SI BCW 30	1
Q501	J707817P1	TSTR JFET SI J 309	1
Q502	J707388P1	TSTR NPN SI BFR 53	1
Q503	J707388P1	TSTR NPN SI BFR 53	1
Q504	J708318P1	TSTR PNP SI BFT 92	1
Q601	J707817P1	TSTR JFET SI J 309	1
Q602	J707388P1	TSTR NPN SI BFR 53	1
Q603	J707388P1	TSTR NPN SI BFR 53	1
Q604	J708318P1	TSTR PNP SI BFT 92	1
Q605	J707386P1	TSTR NPN SI BCW 32	1
Q606	J707386P1	TSTR NPN SI BCW 32	1
Q607	J707386P1	TSTR NPN SI BCW 32	1
Q608	J707433P1	TSTR MFET SI BF 989	1
Q609	J707419P1	TSTR JFET SI BF511	1
R000	J707385P332	RES MFLM 1/8W 3K3 5%	1
R100	J707385P152	RES MFLM 1/8W 1K5 5%	1
R101	J707385P562	RES MFLM 1/8W 5K6 5%	1
R102	J707385P470	RES MFLM 1/8W 47R 5%	1
R103	J707385P152	RES MFLM 1/8W 1K5 5%	1

Pos	Code No	Description	Qt
R104	J707385P562	RES MFLM 1/8W 5K6 5%	1
R105	J707385P270	RES MFLM 1/8W 27R 5%	1
R106	J707385P270	RES MFLM 1/8W 27R 5%	1
R107	J707385P102	RES MFLM 1/8W 1KO 5%	1
R108	J707385P100	RES MFLM 1/8W 10R 5%	1
R109	J707385P100	RES MFLM 1/8W 10R 5%	1
R110	J707385P947	RES MFLM 1/8W 4R7 20%	1
R111	J707385P102	RES MFLM 1/8W 1KO 5%	1
R112	J707385P270	RES MFLM 1/8W 27R 5%	1
R113	J707385P100	RES MFLM 1/8W 10R 5% G1/G2/G3	1
R114	J707385P100	RES MFLM 1/8W 10R 5% G1/G2/G3	1
R115	J707385P100	RES MFLM 1/8W 10R 5%	1
R116	J707385P100	RES MFLM 1/8W 10R 5%	1
R117	J707385P100	RES MFLM 1/8W 10R 5%	1
R119	J707385P473	RES MFLM 1/8W 47K 5%	1
R120	J707385P473	RES MFLM 1/8W 47K 5%	1
R121	J707385P221	RES MFLM 1/8W 220R 5% G1/G2/G3	1
R121	J707385P102	RES MFLM 1/8W 1KO 5% G4/G5/G6	1
R122	J707385P221	RES MFLM 1/8W 220R 5% G1/G2/G3	1
R122	J707385P102	RES MFLM 1/8W 1KO 5% G4/G5/G6	1
R123	J707385P220	RES MFLM 1/8W 22R 5%	1
R124	J707385P220	RES MFLM 1/8W 22R 5%	1
R125	J707385P391	RES MFLM 1/8W 390R 5% G1/G2/G3	1
R126	J707385P391	RES MFLM 1/8W 390R 5% G1/G2/G3	1
R127	J707385P101	RES MFLM 1/8W 100R 5% G1/G2/G3	1
R130	J707385P103	RES MFLM 1/8W 10K 5%	1
R131	J707385P472	RES MFLM 1/8W 4K7 5%	1
R132	J708538P9	RES VAR CERM 200K 20%	1
R133	J708538P4	RES VAR CERM 5KO 20%	1
R134	J707385P100	RES MFLM 1/8W 10R 5%	1
R135	J706147P2	RES THERM PTC 80R 25% G1/G2/G3	1
R136	J707385P153	RES MFLM 1/8W 15K 5% G1/G2/G3	1
R136	J707385P101	RES MFLM 1/8W 100R 5% G4/G5/G6	1
R137	J707385P473	RES MFLM 1/8W 47K 5%	1
R138	J707385P333	RES MFLM 1/8W 33K 5%	1
R139	J707385P333	RES MFLM 1/8W 33K 5%	1
R140	J707385P104	RES MFLM 1/8W 100K 5%	1

DATE: 3/17/1987

Pos	Code No	Description	Qt
R141	J707385P222	RES MFLM 1/8W 2K2 5%	1
R142	J707385P222	RES MFLM 1/8W 2K2 5%	1
R143	J707385P104	RES MFLM 1/8W 100K 5%	1
R144	J707385P682	RES MFLM 1/8W 6K8 5%	1
R145	J707385P473	RES MFLM 1/8W 47K 5%	1
R146	J707385P472	RES MFLM 1/8W 4K7 5%	1
R147	J707385P123	RES MFLM 1/8W 12K 5%	1
R148	J707385P331	RES MFLM 1/8W 330R 5%	1
R149	J707385P683	RES MFLM 1/8W 68K 5%	1
R150	J707385P104	RES MFLM 1/8W 100K 5%	1
R151	J707385P274	RES MFLM 1/8W 270K 5%	1
R152	J707385P562	RES MFLM 1/8W 5K6 5%	1
R153	J707385P222	RES MFLM 1/8W 2K2 5%	1
R154	J707385P102	RES MFLM 1/8W 1K0 5%	1
R155	J707385P472	RES MFLM 1/8W 4K7 5%	1
R201	J707385P561	RES MFLM 1/8W 560R 5%	1
R202	J707385P271	RES MFLM 1/8W 270R 5%	1
R203	J707385P153	RES MFLM 1/8W 15K 5%	1
R204	J707385P153	RES MFLM 1/8W 15K 5%	1
R205	J707385P472	RES MFLM 1/8W 4K7 5%	1
R206	J707385P272	RES MFLM 1/8W 2K7 5%	1
R207	J707385P563	RES MFLM 1/8W 56K 5%	1
R208	J707385P563	RES MFLM 1/8W 56K 5%	1
R209	J707385P271	RES MFLM 1/8W 270R 5%	1
R301	J707385P473	RES MFLM 1/8W 47K 5%	1
R302	J707385P221	RES MFLM 1/8W 220R 5%	1
R303	J707385P104	RES MFLM 1/8W 100K 5%	1
R304	J707385P104	RES MFLM 1/8W 100K 5%	1
R306	J707385P222	RES MFLM 1/8W 2K2 5%	1
R307	J707385P681	RES MFLM 1/8W 680R 5%	1
R308	J707385P560	RES MFLM 1/8W 56R 5%	1
R309	J707385P270	RES MFLM 1/8W 27R 5%	1
R310	J707385P104	RES MFLM 1/8W 100K 5%	1
R311	J707385P270	RES MFLM 1/8W 27R 5%	1
R312	J707385P104	RES MFLM 1/8W 100K 5%	1
R313	J707385P104	RES MFLM 1/8W 100K 5%	1
R314	J707385P104	RES MFLM 1/8W 100K 5%	1

Pos	Code No	Description	Qt
R315	J707385P104	RES MFLM 1/8W 100K 5%	1
R316	J707385P104	RES MFLM 1/8W 100K 5%	1
R317	J707385P272	RES MFLM 1/8W 2K7 5%	1
R318	J707385P100	RES MFLM 1/8W 10R 5%	1
R319	J707385P101	RES MFLM 1/8W 100R 5%	1
R320	J707385P103	RES MFLM 1/8W 10K 5%	1
R321	J707385P270	RES MFLM 1/8W 27R 5%	1
R322	J707385P104	RES MFLM 1/8W 100K 5%	1
R323	J707385P102	RES MFLM 1/8W 1K0 5%	1
R324	J707385P101	RES MFLM 1/8W 100R 5%	1
R401	J707385P560	RES MFLM 1/8W 56R 5%	1
R402	J707385P100	RES MFLM 1/8W 10R 5%	1
R403	J707385P332	RES MFLM 1/8W 3K3 5%	1
R405	J707385P100	RES MFLM 1/8W 10R 5%	1
R406	J707385P820	RES MFLM 1/8W 82R 5%	1
R407	J707385P470	RES MFLM 1/8W 47R 5%	1
R408	J707385P470	RES MFLM 1/8W 47R 5%	1
R410	J707385P272	RES MFLM 1/8W 2K7 5%	1
R411	J707385P682	RES MFLM 1/8W 6K8 5%	1
R412	J707385P272	RES MFLM 1/8W 2K7 5%	1
R413	J707385P821	RES MFLM 1/8W 820R 5%	1
R414	J707385P220	RES MFLM 1/8W 22R 5%	1
R415	J707385P222	RES MFLM 1/8W 2K2 5%	1
R416	J707385P562	RES MFLM 1/8W 5K6 5%	1
R417	J707385P103	RES MFLM 1/8W 10K 5%	1
R418	J707385P153	RES MFLM 1/8W 15K 5%	1
R419	J707385P182	RES MFLM 1/8W 1K8 5%	1
R420	J707385P182	RES MFLM 1/8W 1K8 5%	1
R421	J707385P182	RES MFLM 1/8W 1K8 5%	1
R422	J707385P473	RES MFLM 1/8W 47K 5%	1
R423	J707385P153	RES MFLM 1/8W 15K 5%	1
R424	J708538P5	RES VAR CERM 10K 20%	1
R425	J707385P272	RES MFLM 1/8W 2K7 5%	1
R426	J707385P563	RES MFLM 1/8W 56K 5%	1
R427	J707385P273	RES MFLM 1/8W 27K 5%	1
R428	J707385P683	RES MFLM 1/8W 68K 5%	1
R429	J707385P104	RES MFLM 1/8W 100K 5%	1

DATE: 3/17/1987

Pos	Code No	Description	Qt
R430	J707385P334	RES MFLM 1/8W 330K 5%	1
R431	J707385P473	RES MFLM 1/8W 47K 5%	1
R432	J707385P473	RES MFLM 1/8W 47K 5%	1
R433	J707385P271	RES MFLM 1/8W 270R 5%	1
R434	J707385P102	RES MFLM 1/8W 1K0 5%	1
R435	J706147P3	RES THERM PTC 250R 25%	1
R436	J707385P392	RES MFLM 1/8W 3K9 5%	1
R437	J707406P7	RES THERM NTC 220R 10%	1
R438	J707385P222	RES MFLM 1/8W 2K2 5%	1
R439	J707385P392	RES MFLM 1/8W 3K9 5%	1
R440	J707385P392	RES MFLM 1/8W 3K9 5%	1
R441	J707385P101	RES MFLM 1/8W 100R 5%	1
R442	J708538P6	RES VAR CERM 20K 20%	1
R444	J707385P473	RES MFLM 1/8W 47K 5%	1
R445	J707385P273	RES MFLM 1/8W 27K 5%	1
R446	J707385P224	RES MFLM 1/8W 220K 5%	1
R447	J707385P392	RES MFLM 1/8W 3K9 5%	1
R448	J707385P101	RES MFLM 1/8W 100R 5%	1
R449	J707385P470	RES MFLM 1/8W 47R 5%	1
R450	J707385P103	RES MFLM 1/8W 10K 5%	1
R451	J707385P332	RES MFLM 1/8W 3K3 5%	1
R501	J707385P122	RES MFLM 1/8W 1K2 5%	1
R502	J707385P122	RES MFLM 1/8W 1K2 5%	1
R503	J707385P122	RES MFLM 1/8W 1K2 5%	1
R504	J707385P104	RES MFLM 1/8W 100K 5%	1
R505	J707385P104	RES MFLM 1/8W 100K 5%	1
R506	J707385P104	RES MFLM 1/8W 100K 5%	1
R508	J707385P103	RES MFLM 1/8W 10K 5%	1
R509	J707385P100	RES MFLM 1/8W 10R 5%	1
R510	J707385P332	RES MFLM 1/8W 3K3 5%	1
R512	J707385P561	RES MFLM 1/8W 560R 5%	1
R513	J707385P183	RES MFLM 1/8W 18K 5%	1
R514	J707385P472	RES MFLM 1/8W 4K7 5%	1
R515	J707385P271	RES MFLM 1/8W 270R 5%	1
R517	J707385P101	RES MFLM 1/8W 100R 5%	1
R520	J707385P682	RES MFLM 1/8W 6K8 5%	1
R521	J707385P152	RES MFLM 1/8W 1K5 5%	1

Pos	Code No	Description	Qt
R522	J707385P680	RES MFLM 1/8W 68R 5%	1
R523	J707385P222	RES MFLM 1/8W 2K2 5%	1
R524	J707385P472	RES MFLM 1/8W 4K7 5%	1
R525	J707385P680	RES MFLM 1/8W 68R 5%	1
R526	J707385P104	RES MFLM 1/8W 100K 5%	1
R527	J707385P104	RES MFLM 1/8W 100K 5%	1
R528	J707385P103	RES MFLM 1/8W 10K 5%	1
R529	J707385P150	RES MFLM 1/8W 15R 5%	1
R530	J707385P182	RES MFLM 1/8W 1K8 5%	1
R531	J707385P682	RES MFLM 1/8W 6K8 5%	1
R532	J707385P392	RES MFLM 1/8W 3K9 5%	1
R601	J707385P122	RES MFLM 1/8W 1K2 5%	1
R602	J707385P122	RES MFLM 1/8W 1K2 5%	1
R603	J707385P122	RES MFLM 1/8W 1K2 5%	1
R604	J707385P104	RES MFLM 1/8W 100K 5%	1
R605	J707385P104	RES MFLM 1/8W 100K 5%	1
R606	J707385P104	RES MFLM 1/8W 100K 5%	1
R607	J707385P561	RES MFLM 1/8W 560R 5%	1
R608	J707385P221	RES MFLM 1/8W 220R 5%	1
R609	J707385P472	RES MFLM 1/8W 4K7 5%	1
R610	J707385P183	RES MFLM 1/8W 18K 5%	1
R611	J707385P271	RES MFLM 1/8W 270R 5%	1
R612	J707385P223	RES MFLM 1/8W 22K 5%	1
R613	J707385P101	RES MFLM 1/8W 100R 5%	1
R614	J707385P682	RES MFLM 1/8W 6K8 5%	1
R615	J707385P222	RES MFLM 1/8W 2K2 5%	1
R616	J707385P101	RES MFLM 1/8W 100R 5%	1
R617	J707385P101	RES MFLM 1/8W 100R 5%	1
R618	J707385P102	RES MFLM 1/8W 1K0 5%	1
R619	J707385P102	RES MFLM 1/8W 1K0 5%	1
R620	J707385P272	RES MFLM 1/8W 2K7 5%	1
R621	J707385P330	RES MFLM 1/8W 33R 5%	1
R622	J707385P102	RES MFLM 1/8W 1K0 5%	1
R623	J707385P123	RES MFLM 1/8W 12K 5%	1
R624	J707385P223	RES MFLM 1/8W 22K 5%	1
R625	J707385P470	RES MFLM 1/8W 47R 5%	1
R626	J707385P100	RES MFLM 1/8W 10R 5%	1

DATE: 3/17/1987

Pos	Code No	Description	Qt
R627	J707385P103	RES MFLM 1/8W 10K 5%	1
R628	J707385P224	RES MFLM 1/8W 220K 5%	1
R629	J707385P393	RES MFLM 1/8W 39K 5%	1
R629	J707385P823	RES MFLM 1/8W 82K 5% G3 ONLY	1
R630	J707385P100	RES MFLM 1/8W 10R 5%	1
R631	J707385P332	RES MFLM 1/8W 3K3 5% NOT IN G3	1
R632	J707385P393	RES MFLM 1/8W 39K 5%	1
R633	J707385P223	RES MFLM 1/8W 22K 5%	1
R634	J707385P470	RES MFLM 1/8W 47R 5%	1
R635	J707385P102	RES MFLM 1/8W 1KO 5%	1
R636	J707385P332	RES MFLM 1/8W 3K3 5%	1
R637	J707385P181	RES MFLM 1/8W 180R 5%	1
R638	J707385P154	RES MFLM 1/8W 150K 5%	1
R638	J707385P823	RES MFLM 1/8W 82K 5% G3 ONLY	1
R639	J707385P682	RES MFLM 1/8W 6K8 5%	1
R639	J707385P822	RES MFLM 1/8W 8K2 5% G3 ONLY	1
R640	J707385P105	RES MFLM 1/8W 1MO 10%	1
R641	J707385P184	RES MFLM 1/8W 180K 5%	1
R642	J707385P184	RES MFLM 1/8W 180K 5%	1
R643	J707385P105	RES MFLM 1/8W 1MO 10%	1
R644	J707385P224	RES MFLM 1/8W 220K 5%	1
R645	J707385P103	RES MFLM 1/8W 10K 5%	1
R646	J707385P472	RES MFLM 1/8W 4K7 5%	1
R647	J707385P333	RES MFLM 1/8W 33K 5%	1
R648	J707385P683	RES MFLM 1/8W 68K 5%	1
R649	J707385P104	RES MFLM 1/8W 100K 5%	1
R650	J707385P223	RES MFLM 1/8W 22K 5%	1
R651	J707385P104	RES MFLM 1/8W 100K 5%	1
R652	J707385P103	RES MFLM 1/8W 10K 5%	1
R653	J707385P333	RES MFLM 1/8W 33K 5%	1
R654	J707385P562	RES MFLM 1/8W 5K6 5%	1
R655	J707385P183	RES MFLM 1/8W 18K 5%	1
R656	J707385P393	RES MFLM 1/8W 39K 5%	1
R657	J707385P823	RES MFLM 1/8W 82K 5%	1
R658	J707385P154	RES MFLM 1/8W 150K 5%	1
R659	J707385P102	RES MFLM 1/8W 1KO 5%	1
R660	J707385P333	RES MFLM 1/8W 33K 5%	1

Pos	Code No	Description	Qt
R661	J707385P473	RES MFLM 1/8W 47K 5%	1
R662	J707385P393	RES MFLM 1/8W 39K 5%	1
R663	J708538P5	RES VAR CERM 10K 20%	1
R664	J707385P333	RES MFLM 1/8W 33K 5%	1
R665	J707385P824	RES MFLM 1/8W 820K 5%	1
R666	J707385P124	RES MFLM 1/8W 120K 5%	1
R667	J707385P124	RES MFLM 1/8W 120K 5%	1
R668	J707385P122	RES MFLM 1/8W 1K2 5%	1
R669	J707385P221	RES MFLM 1/8W 220R 5%	1
R670	J707385P103	RES MFLM 1/8W 10K 5%	1
R671	J707385P562	RES MFLM 1/8W 5K6 5%	1
R672	J707385P822	RES MFLM 1/8W 8K2 5%	1
R673	J707385P822	RES MFLM 1/8W 8K2 5%	1
R674	J707385P101	RES MFLM 1/8W 100R 5%	1
R675	J708538P5	RES VAR CERM 10K 20%	1
R676	J707385P123	RES MFLM 1/8W 12K 5%	1
R677	J708538P5	RES VAR CERM 10K 20%	1
R678	J707385P821	RES MFLM 1/8W 820R 5%	1
R679	J707385P683	RES MFLM 1/8W 68K 5%	1
R680	J708538P5	RES VAR CERM 10K 20%	1
R681	J707385P683	RES MFLM 1/8W 68K 5%	1
R682	J707385P561	RES MFLM 1/8W 560R 5%	1
R683	J707385P271	RES MFLM 1/8W 270R 5%	1
R684	J707385P105	RES MFLM 1/8W 1MO 10%	1
R685	J707385P183	RES MFLM 1/8W 18K 5%	1
R686	J707385P103	RES MFLM 1/8W 10K 5%	1
R687	J707385P183	RES MFLM 1/8W 18K 5%	1
R688	J707385P103	RES MFLM 1/8W 10K 5%	1
R689	J707385P124	RES MFLM 1/8W 120K 5%	1
R690	J707385P223	RES MFLM 1/8W 22K 5%	1
R691	J707385P223	RES MFLM 1/8W 22K 5%	1
R692	J707385P105	RES MFLM 1/8W 1MO 10%	1
R693	J707385P223	RES MFLM 1/8W 22K 5%	1
R694	J707385P223	RES MFLM 1/8W 22K 5%	1
R695	J707385P105	RES MFLM 1/8W 1MO 10%	1
R696	J707385P223	RES MFLM 1/8W 22K 5%	1
R697	J707385P223	RES MFLM 1/8W 22K 5%	1

DATE: 3/17/1987

Pos	Code No	Description	Qt
R698	J707385P105	RES MFLM 1/8W 1MO 10%	1
R699	J707385P273	RES MFLM 1/8W 27K 5%	1
R700	J707385P272	RES MFLM 1/8W 2K7 5%	1
R701	J707385P824	RES MFLM 1/8W 820K 5%	1
R702	J707385P824	RES MFLM 1/8W 820K 5%	1
R703	J707385P154	RES MFLM 1/8W 150K 5%	1
R704	J707385P561	RES MFLM 1/8W 560R 5%	1
R705	J707385P122	RES MFLM 1/8W 1K2 5%	1
R706	J707385P561	RES MFLM 1/8W 560R 5%	1
U100	J708165P2	IC LIN OP-AMP 324	1
U201	J708333P1	IC LIN VR FIX 4785	1
U401	J707449P1	IC LIN IF-AMP 3357	1
U402	M905766G1	INT CKT SQ 4002 G1/G2/G4/G5	1
U402	M905766G2	INT CKT SQ 4003 G3/G6	1
U601	J707859P1	IC LIN OP-AMP 204	1
U602	J707859P1	IC LIN OP-AMP 204	1
U603	J707859P1	IC LIN OP-AMP 204	1
U604	J707859P1	IC LIN OP-AMP 204	1
U606	J707243P1	IC DIG REG 4094	1
U607	J707374P3	IC PLL PRESC 12017	1
U607	J707374P4	IC PLL PRESC 12018 G3 ONLY	1
U608	B800902P1	IC PLL SYN CUSTOM DES	1
U609	J707859P1	IC LIN OP-AMP 204	1
U610	J708503P2	IC LIN CMPAR LM 339	1
U615	J708621P2	CPLR OPTO PC 827	1
U616	J708503P2	IC LIN CMPAR LM 339	1
W004	J706451P1	WIRE STRAP	1
W1	A700184P1	RES WIRE JMPR OR JUMPER	1
W3	J707256P1	COIL FIX	1
W5	J708717P1	STRAP	1
W6	J708716P1	STRAP G1/G2/G3	1
Y401	J708426P1	CRYSTAL UNIT 44.5450MHZ	1
Z401	J708330P1	FLTR CRY 45.0 +/-7.5KHZ G1/G4	1
Z401	J708330P2	FLTR CRY 45.0 +/-7.5KHZ G2/G5	1
Z401	J708330P3	FLTR CRY 45.0 +/-7.5KHZ G3/G6	1
Z402	J707446P1	FLTR CER 455K +/-10KHZ G1/G4	1
Z402	J707446P3	FLTR CER 455K +/-10KHZ G2/G5	1

Pos	Code No	Description	Qt
Z402	J707446P4	FLTR CER 455K +/-10KHZ G3/G6	1
Z403	J707446P1	FLTR CER 455K +/-10KHZ G1/G4	1
Z403	J707446P3	FLTR CER 455K +/-10KHZ G2/G5	1
Z403	J707446P4	FLTR CER 455K +/-10KHZ G3/G6	1
	M905780P1R0	BD PW G1/G2/G3	1
	M905780P2R0	BD PW G4/G5/G6	1
		NON ELECTRONICAL PARTS	
	K805569G1	SHIELD METALLIZED	1
	J708966G1	HEAT SINK MODF	1
	J708561P3	COIL FIXED	1
	J708561P3	COIL FIXED	1

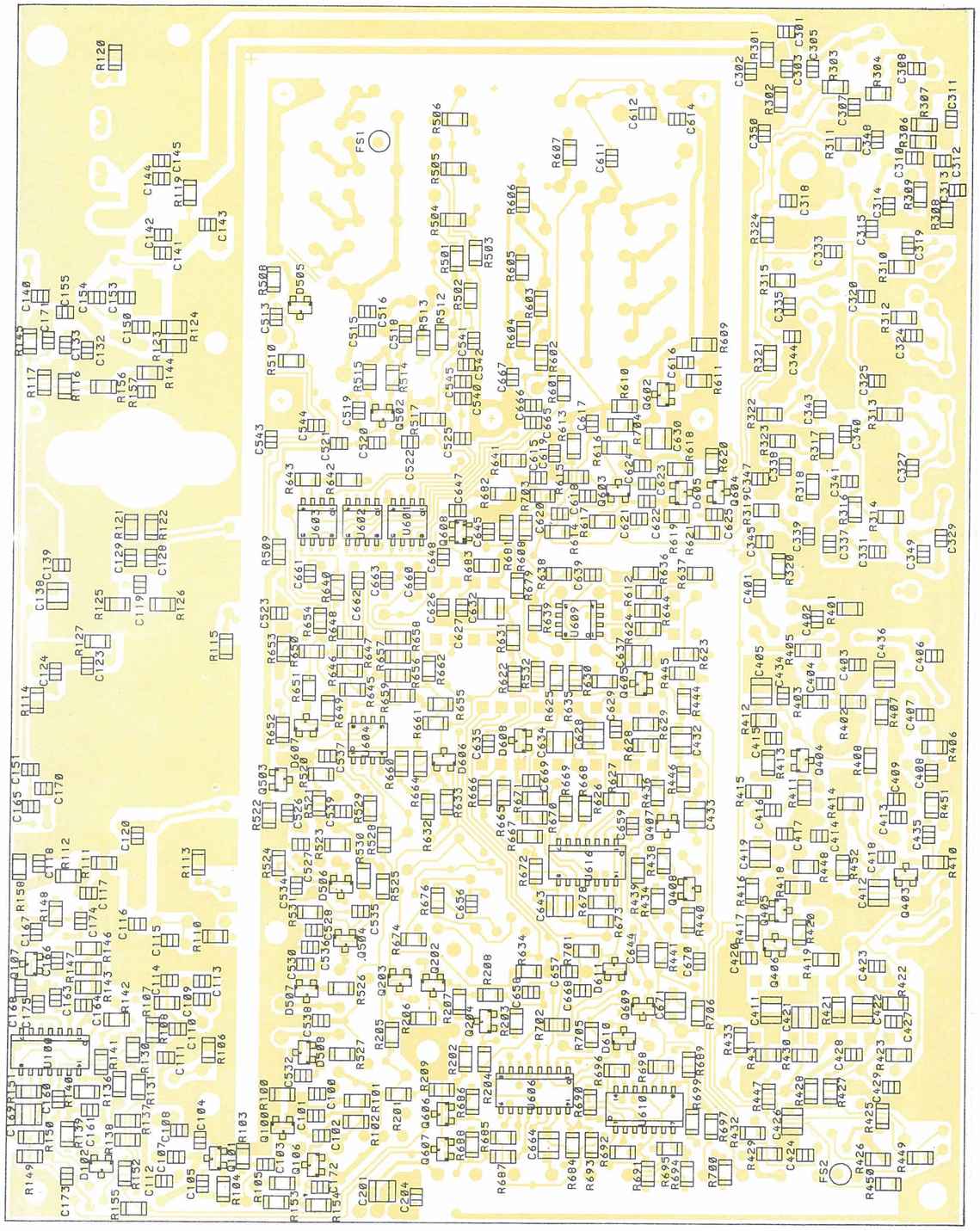

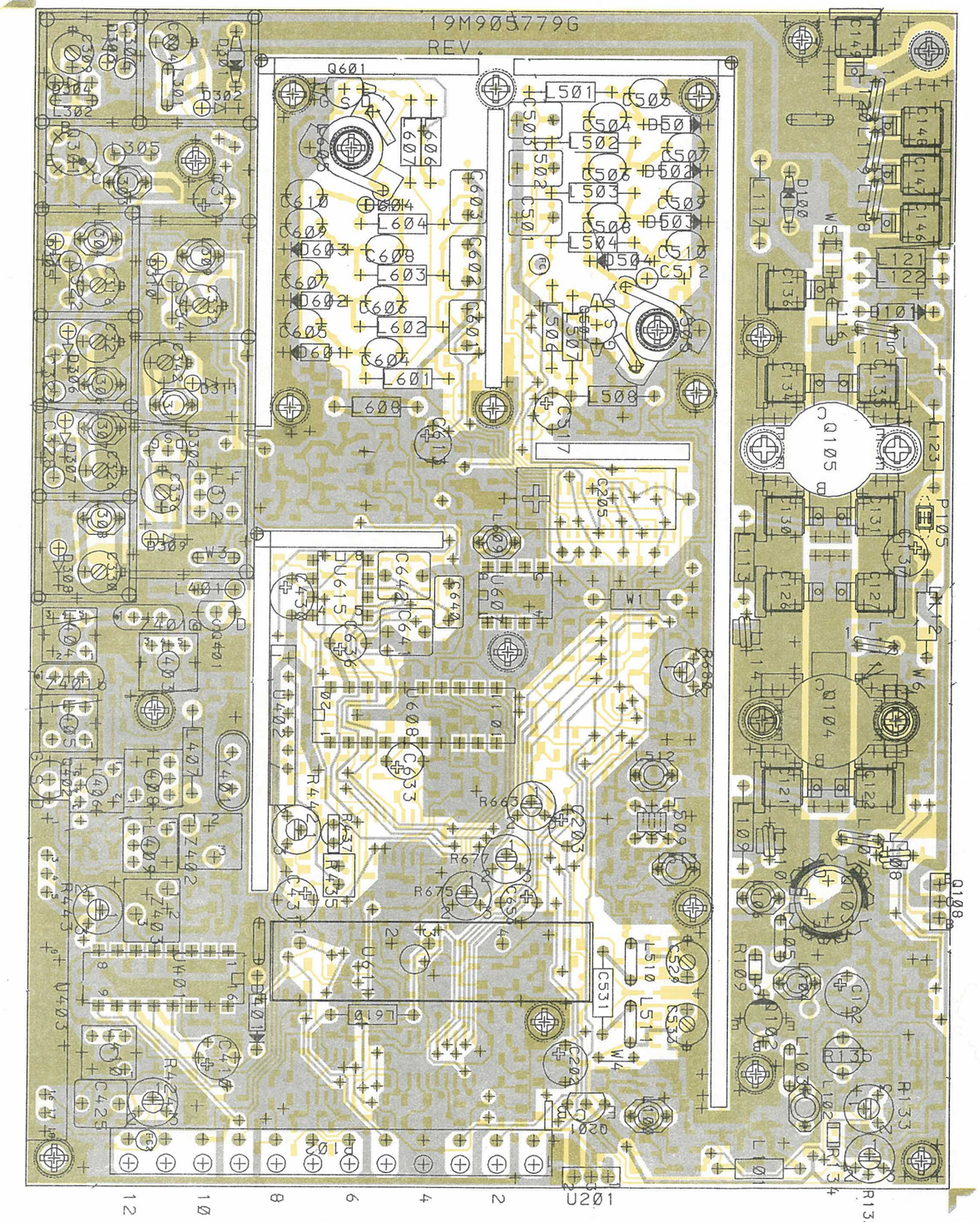

RADIO FREQUENCY BOARD RF6660
COMPONENT LAYOUT

D404.200/2 CODE NO. M905779GX REV. 3

DOC. ISSUE 12.04.89

Storno

Storno

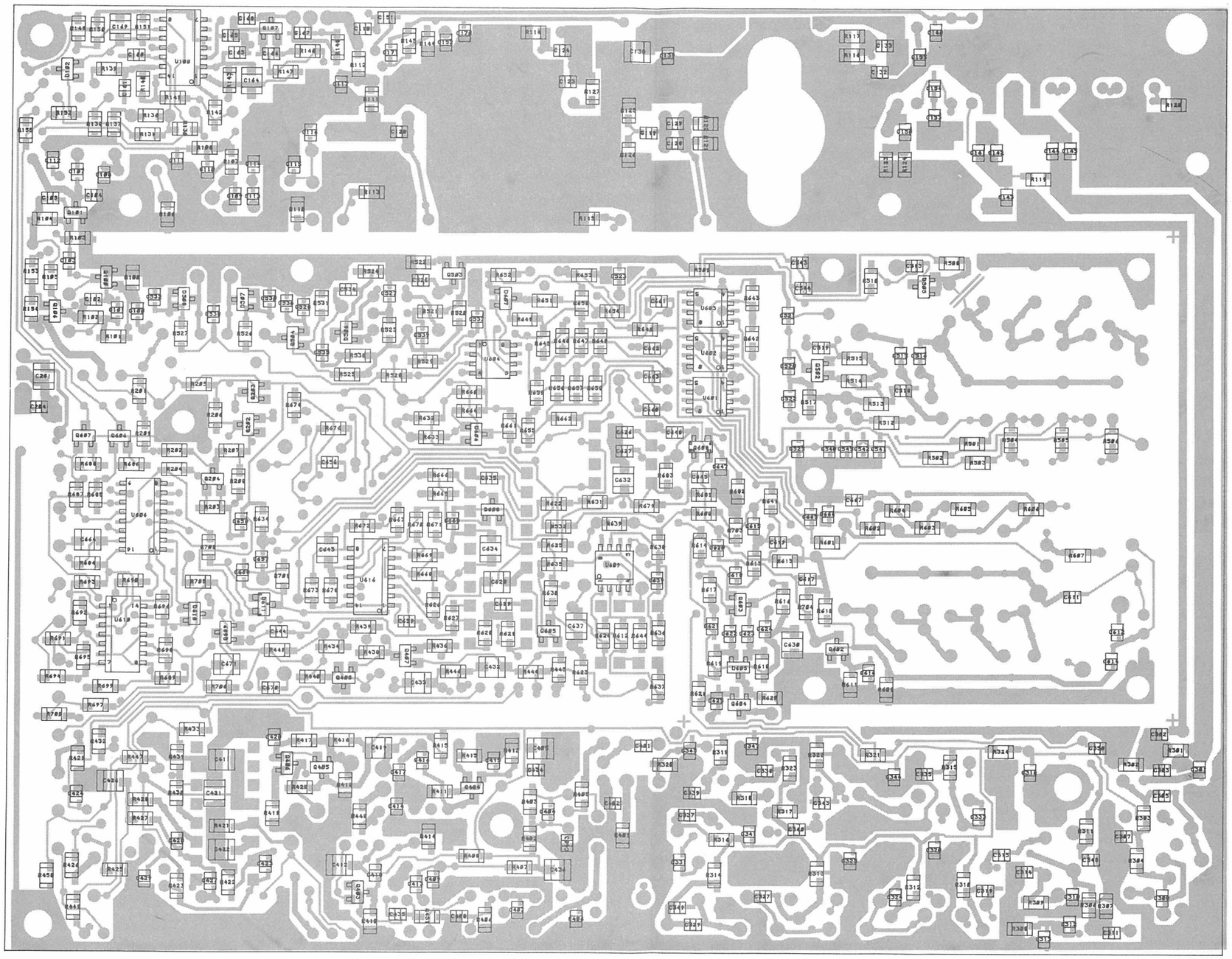

SIMPLEX
RADIO FREQUENCY-UNIT RF6660
COMPONENT LAYOUT - CHIP SIDE

D404.200

*	25W	6W
C 119	100p	
C 121	27 p	
C 122	27 p	
C 123	100p	
C 124	10n	
C 126	15 p	
C 127	15p	
C 128	12p	10p
C 129	12p	10p
C 134	47p	56p
C 135	47p	56p
L 109	100n	
L 110	+	
L 111	+	
L 112	+	
Q 104	+	
Q 105	+	+
R 113	10	
R 114	10	
R 121	220	1K
R 122	220	1K
R 125	390	
R 126	390	
R 127	100	
R 131	4K7	6K8
R 135	+	
R 136	15K	100

*	Channel spacing KHz		
	12.5	20	25
Z401a Z401b	P3	P2	P1
Z402	P4	P3	P1
Z403	P4	P3	P1
U402	G2	G1	G1
R631		+	+
U607	P4	P3	P3
R629	82K	39K	
R636	82K	150K	
R639	8K2	6K8	

CODE NO.	MODUL	REV.
M905779G1	RF6662S25	-
M905779G2	RF6663S25	-
M905779G3	RF6664S25	A
M905779G4	RF6662S6	-
M905779G5	RF6663S6	-
M905779G6	RF6664S6	A

NOTE:
COMPONENTS MARKRD RXXX ARE
PLACED ON COMPONENT SIDE.

>>THIS DOCUMENT REMAINS STORNO'S PROPERTY AND STORNO RESERVES ALL RIGHTS IN RESPECT TO THIS DOCUMENT. WITHOUT STORNO'S WRITTEN PERMISSION THE CONTENTS OF THE DOCUMENT MUST NOT BE IMPARTED TO A THIRD PARTY NOR BE USED FOR ANY UNAUTHORIZED PURPOSE<<

RADIO FREQUENCY UNIT RF666X

D404.132/4

*	25W	6W
C119	100p	
C121	27p	
C122	27p	
C123	100p	
C124	10n	
C126	15p	
C127	15p	
C128	12p	10p
C129	12p	10p
C134	47p	56p
C135	47p	56p
L109	100n	
L110	*	
L112	*	
Q104	*	
Q105	*	*
R113	10	
R114	10	
R121	220	1K
R122	220	1K
R125	390	
R126	390	
R127	100	
R131	4K7	68K
R135	*	
R136	15K	100

*	Channel spacing KHz		
	125	20	25
Z401a Z401b	P3	P2	P1
Z402	P4	P3	P1
Z403	P4	P3	P1
U402	G2	G1	G1
R631		*	*
U607	P4	P3	P3
R629	82K		39K
R638	82K		150K
R639	8K2		6K8

CODE NO.	MODUL	REV.
M905779G1	RF6662S25	B
M905779G2	RF6663S25	B
M905779G3	RF6664S25	C
M905779G4	RF6662S6	B
M905779G5	RF6663S6	B
M905779G6	RF6664S6	C

NOTE:
COMPONENTS MARKRD RXXX ARE PLACED ON COMPONENT SIDE.

>>THIS DOCUMENT REMAINS STORNO'S PROPERTY AND STORNO RESERVES ALL RIGHTS IN RESPECT TO THIS DOCUMENT. WITHOUT STORNO'S WRITTEN PERMISSION THE CONTENTS OF THE DOCUMENT MUST NOT BE IMPARTED TO A THIRD PARTY NOR BE USED FOR ANY UNAUTHORIZED PURPOSE<<

RADIO FREQUENCY UNIT RF666X

D404.132/5

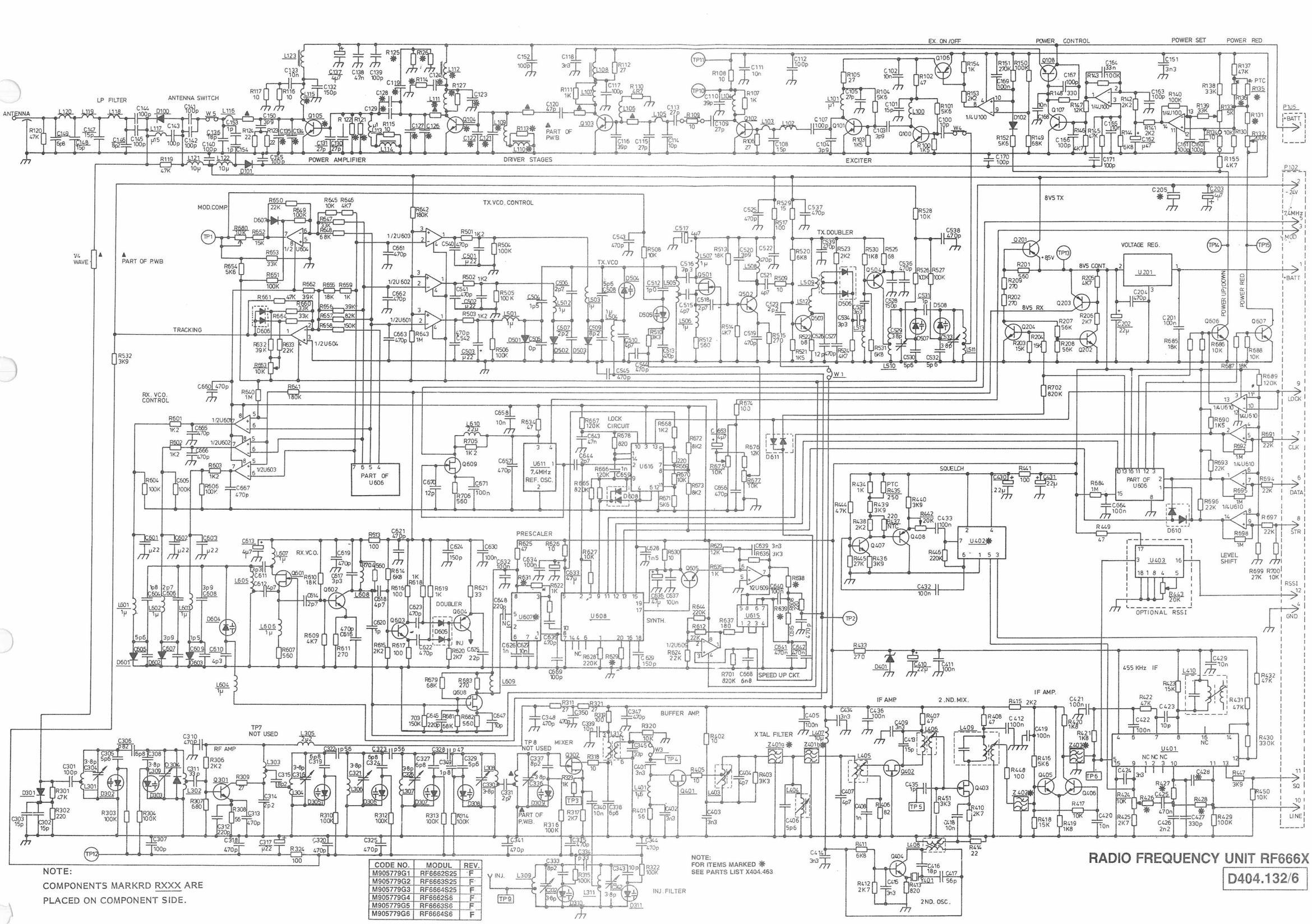

NOTE:
COMPONENTS MARKRD RXXX ARE
PLACED ON COMPONENT SIDE.

CODE NO.	MODUL	REV.
M905779G1	RF6662S25	F
M905779G2	RF6663S25	F
M905779G3	RF6664S25	F
M905779G4	RF6662S6	F
M905779G5	RF6663S6	F
M905779G6	RF6664S6	F

NOTE:
FOR ITEMS MARKED ✱
SEE PARTS LIST X404.463

RADIO FREQUENCY UNIT RF666X

D404.132/6

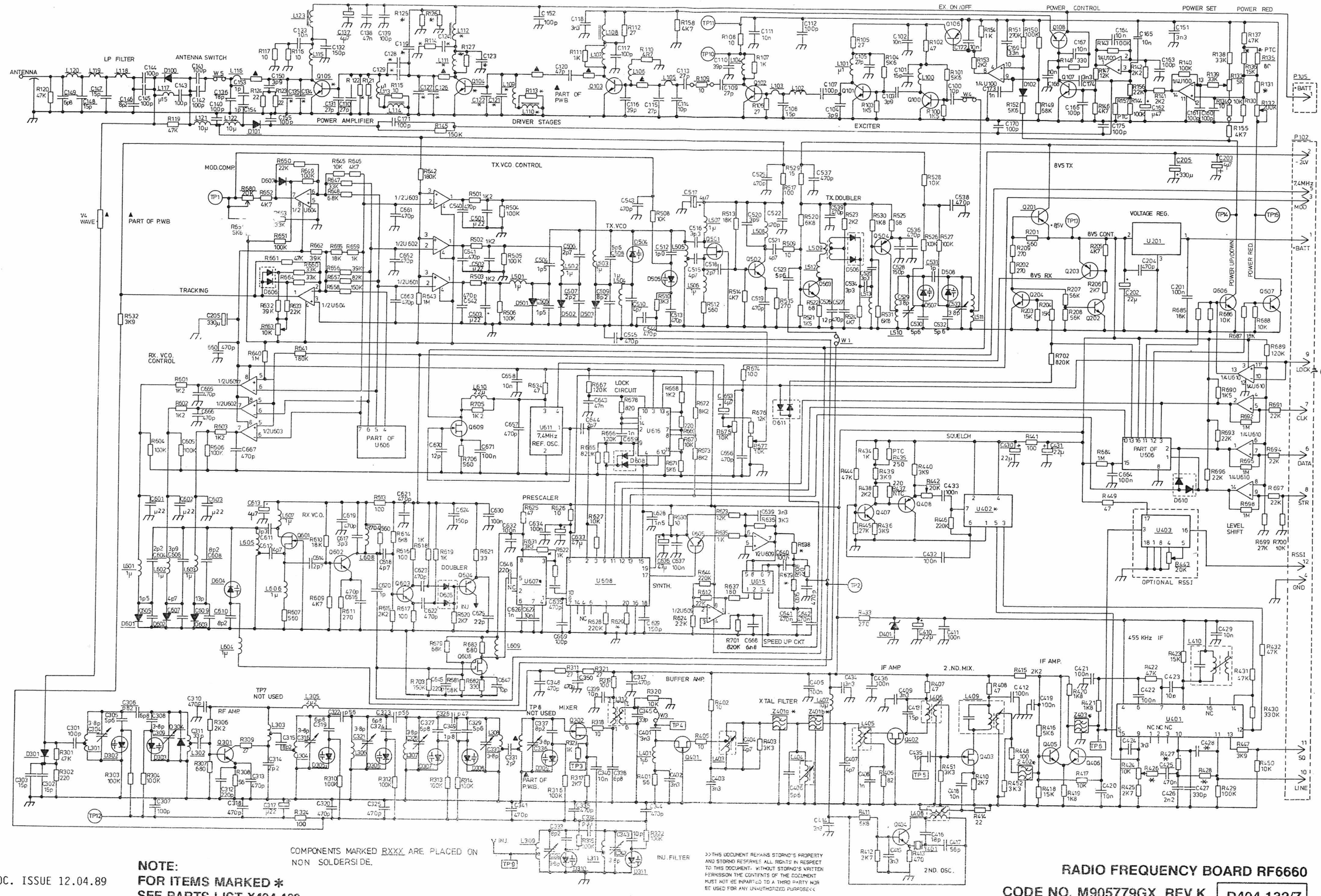

COMPONENTS MARKED RXXX ARE PLACED ON NON SOLDERSIDE.

NOTE:
FOR ITEMS MARKED *
SEE PARTS LIST X404.463

>>THIS DOCUMENT REMAINS STORNO'S PROPERTY AND STORNO RESERVES ALL RIGHTS IN RESPECT TO THIS DOCUMENT. WITHOUT STORNO'S WRITTEN PERMISSION THE CONTENTS OF THE DOCUMENT MUST NOT BE IMPARTED TO A THIRD PARTY NOR BE USED FOR ANY UNAUTHORIZED PURPOSE<<

DOC. ISSUE 12.04.89

RADIO FREQUENCY BOARD RF6660

CODE NO. M905779GX REV.K **D404.132/7**

RADIO FREQUENCY BOARD RF677x

- Electrical diagram
- Component layout
- Part list

PARTS LIST FOR RADIO FREQUENCY UNIT RF6774L/H : M905902GX BD REV. 2

Pos	Code No.	Description	Qt
		COMPONENTS REVISED SINCE LAST EDITION ARE MARKED ✱	
			REV
	M905902G1	RF6774S25L 200MHZ LOW BAND	F
	M905902G2	RF6774S25H 200MHZ HIGH BAND	I
C100	J707809P13	CAP CER NPO 10P 5%	1
C101	21R13740A71	CAP CER NPO 470P 5%	1
C102	J707809P8	CAP CER NPO 3P9 .25P	1
C103	J707809P22	CAP CER NPO 56P 5% G1	1
C103	J707809P19	CAP CER NPO 33P 5% G2	1
C104	J707809P18	CAP CER NPO 27P 5%	1
C106	21R13741M45	CAP CER CL2 10N 10%	1
C107	J707809P21	CAP CER NPO 47P 5% G1	1
C107	J707809P19	CAP CER NPO 33P 5% G2	1
C108	J707809P21	CAP CER NPO 47P 5%	1
C109	J707809P16	CAP CER NPO 18P 5% G1	1
C109	J707809P13	CAP CER NPO 10P 5% G2	1
C110	21R13741M45	CAP CER CL2 10N 10%	1
C111	J707809P25	CAP CER NPO 100P 5%	1
C112	21R13740A71	CAP CER NPO 470P 5%	1
C113	J707809P17	CAP CER NPO 22P 5%	1
C114	J707809P25	CAP CER NPO 100P 5%	1
C115	J707809P24	CAP CER NPO 82P 5%	1
C116	21R13741C17	CAP CER CL2 100N 10%	1
C117	J707809P26	CAP CER NPO 120P 5%	1
C119	21R13740A71	CAP CER NPO 470P 5%	1
C120	J707809P11	CAP CER NPO 6P8 .25P G1	1
C120	J707809P10	CAP CER NPO 5P6 .25P G2	1
C121	J707809P14	CAP CER NPO 12P 5% G1	1
C121	J707809P13	CAP CER NPO 10P 5% G2	1
C122	A700006P38	CAP MICA 150P 5%	1
C123	21R13741M45	CAP CER CL2 10N 10%	1
C124	J707809P27	CAP CER NPO 150P 5%	1
C125	21R13740A71	CAP CER NPO 470P 5%	1
C126	21R13741M45	CAP CER CL2 10N 10%	1
C127	J707353P6	CAP ELECT 4U7 25V	1
C128	J707809P27	CAP CER NPO 150P 5%	1
C129	J707809P27	CAP CER NPO 150P 5%	1
C130	A700006P17	CAP MICA 22P 5% G1	1
C130	A700006P6	CAP MICA 10P 5% G2	1
C131	J707809P11	CAP CER NPO 6P8 .25P G1	1
C131	J707809P8	CAP CER NPO 3P9 .25P G2	1
C132	A700006P38	CAP MICA 150P 5%	1
C133	21R13741M45	CAP CER CL2 10N 10%	1
C134	J707809P27	CAP CER NPO 150P 5%	1
C135	21R13740A71	CAP CER NPO 470P 5%	1
C136	A700006P35	CAP MICA 110P 5%	1
C137	A700006P17	CAP MICA 22P 5%	1
C138	J707809P27	CAP CER NPO 150P 5%	1
C139	J707809P27	CAP CER NPO 150P 5%	1
C140	J707809P27	CAP CER NPO 150P 5%	1
C141	J707809P27	CAP CER NPO 150P 5%	1
C142	A700006P4	CAP PTFE 8P2 10%	1
C143	A700006P19	CAP MICA 27P 5% G1	1
C143	A700006P18	CAP MICA 24P 5% G2	1
C144	A700006P17	CAP MICA 22P 5%	1
C145	A700006P1	CAP PTFE 4P7 10% G1	1
C145	A700006P4	CAP PTFE 8P2 10% G2	1
C146	21R13740A71	CAP CER NPO 470P 5%	1
C147	21R13740A71	CAP CER NPO 470P 5%	1
C148	21R13740A71	CAP CER NPO 470P 5%	1
C149	21R13740A71	CAP CER NPO 470P 5%	1
C150	J707809P1	CAP CER NPO 1P0 .25P	1
C151	J707809P1	CAP CER NPO 1P0 .25P	1
C152	21R13740A71	CAP CER NPO 470P 5%	1
C153	21R13740A71	CAP CER NPO 470P 5%	1
C154	21R13740A71	CAP CER NPO 470P 5%	1
C155	21R13740A71	CAP CER NPO 470P 5%	1
C156	J707353P3	CAP ELECT 0U47 50V	1
C157	21R13740A71	CAP CER NPO 470P 5%	1
C158	21R13740A71	CAP CER NPO 470P 5%	1
C159	21R13741M29	CAP CER CL2 2N2 10%	1
C160	21R13740A71	CAP CER NPO 470P 5%	1
C161	21R13741M45	CAP CER CL2 10N 10%	1
C162	21R13741M45	CAP CER CL2 10N 10%	1
C163	21R13741C05	CAP CER CL2 33N 10%	1
C164	21R13740A71	CAP CER NPO 470P 5%	1
C165	J707809P22	CAP CER NPO 56P 5%	1
C166	21R13740A71	CAP CER NPO 470P 5%	1
C167	J707809P8	CAP CER NPO 3P9 .25P	1
C168	A700006P38	CAP MICA 150P 5% G1	1
C168	A700006P36	CAP MICA 120P 5% G2	1
C169	21R13741M45	CAP CER CL2 10N 10%	1
C170	A700006P30	CAP MICA 68P 5%	1
C172	21R13741M45	CAP CER CL2 10N 10%	1
C173	21R13740A71	CAP CER NPO 470P 5%	1
C174	21R13741M29	CAP CER CL2 2N2 10%	1
C175	21R13741M21	CAP CER CL2 1N 10%	1
C176	21R13741M45	CAP CER CL2 10N 10%	1
C201	21R13741C17	CAP CER CL2 100N 10%	1
C202	J707444P8	CAP TA SOL 22U 16V	1
C203	J707444P6	CAP TA SOL 4U7 35V	1
C204	21R13740A71	CAP CER NPO 470P 5%	1
C205	J707412P9	CAP PYES 100N 10%	1
C301	21R13740A07	CAP CER NPO 1P5 .25P	1
C302	21R13741M21	CAP CER CL2 1N 10%	1
C304	21R13740A15	CAP CER NPO 3P3 .25P G1	1
C304	21R13740A07	CAP CER NPO 1P5 .25P G2	1
C305	21R13740A27	CAP CER NPO 8P2 .25P	1
C306	J707483P5	CAP PHEN 0P68 5% G1	1
C306	J707483P1	CAP PHEN 0P47 5% G2	1
C307	21R13741M21	CAP CER CL2 1N 10%	1
C309	21R13740A27	CAP CER NPO 8P2 .25P	1
C310	21R13741M21	CAP CER CL2 1N 10%	1
C311	21R13741M21	CAP CER CL2 1N 10%	1
C312	21R13740C19	CAP CER NPO 1N2 5%	1
C314	21R13740A15	CAP CER NPO 3P3 .25P G1	1
C314	21R13740A07	CAP CER NPO 1P5 .25P G2	1
C315	21R13741M21	CAP CER CL2 1N 10%	1
C316	21R13740A11	CAP CER NPO 2P2 .25P G1	1
C316	21R13740A09	CAP CER NPO 1P8 .25P G2	1
C317	J707444P2	CAP TA SOL 0U22 35V	1

Pos	Code No.	Description	Qt
C318	21R13741M21	CAP CER CL2 1N 10%	1
C319	21R13740A27	CAP CER NPO 8P2 .25P	1
C320	21R13741M21	CAP CER CL2 1N 10%	1
C322	J707483P7	CAP PHEN 1P00 5% G1	1
C322	J707483P6	CAP PHEN 0P82 5% G2	1
C323	J707483P4	CAP PHEN 0P56 5%	1
C324	21R13740A09	CAP CER NPO 1P8 .25P G1	1
C324	21R13740A07	CAP CER NPO 1P5 .25P G2	1
C325	21R13741M21	CAP CER CL2 1N 10%	1
C326	21R13740A27	CAP CER NPO 8P2 .25P	1
C328	21R13740A27	CAP CER NPO 8P2 .25P	1
C331	21R13740A27	CAP CER NPO 8P2 .25P	1
C332	21R13740A27	CAP CER NPO 8P2 .25P	1
C333	21R13740A11	CAP CER NPO 2P2 .25P G1	1
C333	21R13740A09	CAP CER NPO 1P8 .25P G2	1
C335	21R13741M21	CAP CER CL2 1N 10%	1
C338	21R13740A24	CAP CER NPO 6P8 .25P	1
C339	21R13741M21	CAP CER CL2 1N 10%	1
C340	21R13741A33	CAP CER CL2 3N3 10%	1
C345	21R13740A41	CAP CER NPO 33P 5%	1
C347	21R13741M21	CAP CER CL2 1N 10%	1
C348	21R13741M21	CAP CER CL2 1N 10%	1
C350	21R13740A07	CAP CER NPO 1P5 .25P G1	1
C350	21R13740A03	CAP CER NPO 1P0 .25P G2	1
C351	21R13740A21	CAP CER NPO 5P6 .25P G1	1
C351	21R13740A19	CAP CER NPO 4P7 .25P G2	1
C353	J707483P2	CAP PHEN 0P33 5%	1
C354	21R13740A21	CAP CER NPO 5P6 .25P G1	1
C354	21R13740A19	CAP CER NPO 4P7 .25P G2	1
C355	J707483P7	CAP PHEN 1P00 5% G1	1
C355	J707483P13	CAP PHEN 0P22 10% G2	1
C356	21R13741M21	CAP CER CL2 1N 10%	1
C357	21R13740A03	CAP CER NPO 1P0 .25P	1
C358	21R13740A03	CAP CER NPO 1P0 .25P	1
C401	21R13741A33	CAP CER CL2 3N3 10%	1
C402	21R13741A33	CAP CER CL2 3N3 10%	1
C403	21R13741A33	CAP CER CL2 3N3 10%	1
C404	21R13740A19	CAP CER NPO 4P7 .25P	1
C405	21R13741C17	CAP CER CL2 100N 10%	1
C406	21R13740A21	CAP CER NPO 5P6 .25P	1
C407	21R13740A19	CAP CER NPO 4P7 .25P	1
C408	21R13741M21	CAP CER CL2 1N 10%	1
C409	21R13741A33	CAP CER CL2 3N3 10%	1
C410	J707444P8	CAP TA SOL 22U 16V	1
C411	21R13741C17	CAP CER CL2 100N 10%	1
C412	21R13741C17	CAP CER CL2 100N 10%	1
C413	J707436P21	CAP CER NPO 15P 5%	1
C414	21R13741A33	CAP CER CL2 3N3 10%	1
C415	21R13741A33	CAP CER CL2 3N3 10%	1
C416	J708702P16	CAP CER N750 18P 5%	1
C417	21R13740A49	CAP CER NPO 56P 5%	1
C418	21R13741M45	CAP CER CL2 10N 10%	1
C419	21R13741C17	CAP CER CL2 100N 10%	1
C420	21R13741M45	CAP CER CL2 10N 10%	1
C421	21R13741C17	CAP CER CL2 100N 10%	1
C422	21R13741C17	CAP CER CL2 100N 10%	1
C423	21R13740A29	CAP CER NPO 10P 5%	1
C424	21R13741A33	CAP CER CL2 3N3 10%	1
C425	J707412P13	CAP PYES 470N 10%	1
C426	21R13740C25	CAP CER NPO 2N2 5%	1
C427	21R13740C67	CAP CER NPO 330P 5%	1
C428	21R13740A63	CAP CER NPO 220P 5%	1
C429	21R13741M45	CAP CER CL2 10N 10%	1
C430	J707444P8	CAP TA SOL 22U 16V	1
C431	J707444P8	CAP TA SOL 22U 16V	1
C432	21R13741C17	CAP CER CL2 100N 10%	1
C433	21R13741C17	CAP CER CL2 100N 10%	1
C434	21R13741A33	CAP CER CL2 3N3 10%	1
C435	21R13740A03	CAP CER NPO 1P0 .25P	1
C436	21R13741C17	CAP CER CL2 100N 10%	1
C501	J707412P11	CAP PYES 220N 10%	1
C502	J707412P11	CAP PYES 220N 10%	1
C503	J707412P11	CAP PYES 220N 10%	1
C504	A700235P4	CAP CER N150 1P8 .25P	1
C505	A700235P4	CAP CER N150 1P8 .25P G1	1
C505	A700235P8	CAP CER N150 3P9 .25P G2	1
C506	A700235P8	CAP CER N150 3P9 .25P G1	1
C506	A700235P7	CAP CER N150 3P3 .25P G2	1
C507	A700235P8	CAP CER N150 3P9 .25P G1	1
C507	A700235P9	CAP CER N150 4P7 .25P G2	1
C508	A700235P12	CAP CER N150 8P2 .25P G1	1
C508	A700235P10	CAP CER N150 5P6 .25P G2	1
C509	A700235P32	CAP CER N150 11P 5% G1	1
C509	A700235P10	CAP CER N150 5P6 5% G2	1
C510	A700235P12	CAP CER N150 8P2 .25P G1	1
C510	A700235P11	CAP CER N150 6P8 .25P G2	1
C512	J707483P7	CAP PHEN 1P00 5%	1
C513	21R13741M13	CAP CER CL2 470P 10%	1
C515	21R13740A19	CAP CER NPO 4P7 .25P	1
C516	21R13740A15	CAP CER NPO 3P3 .25P	1
C517	J707444P6	CAP TA SOL 4U7 35V	1
C518	21R13740A13	CAP CER NPO 2P7 .25P G1	1
C518	21R13740A11	CAP CER NPO 2P2 .25P G2	1
C519	21R13741M13	CAP CER CL2 470P 10%	1
C520	21R13740A13	CAP CER NPO 2P7 .25P G1	1
C520	21R13740A11	CAP CER NPO 2P2 .25P G2	1
C521	21R13740A24	CAP CER NPO 6P8 .25P	1
C522	21R13741M13	CAP CER CL2 470P 10%	1
C523	21R13740A05	CAP CER NPO 1P2 .25P G1	1
C523	21R13740A09	CAP CER NPO 1P8 .25P G2	1
C524	21R13741M13	CAP CER CL2 470P 10%	1
C525	21R13741M13	CAP CER CL2 470P 10%	1
C526	21R13741M13	CAP CER CL2 470P 10%	1
C527	21R13741M13	CAP CER CL2 470P 10%	1
C528	21R13741M13	CAP CER CL2 470P 10%	1
C540	21R13741M13	CAP CER CL2 470P 10%	1
C541	21R13741M13	CAP CER CL2 470P 10%	1
C542	21R13741M13	CAP CER CL2 470P 10%	1
C543	21R13741M13	CAP CER CL2 470P 10%	1
C544	21R13741M13	CAP CER CL2 470P 10%	1
C545	21R13741M13	CAP CER CL2 470P 10%	1
C601	J707412P11	CAP PYES 220N 10%	1
C602	J707412P11	CAP PYES 220N 10%	1
C603	J707412P11	CAP PYES 220N 10%	1
C604	A700235P2	CAP CER NPO 1P2 .25P	1
C606	A700235P6	CAP CER N150 2P7 .25P G1	1
C606	A700235P5	CAP CER N150 2P2 .25P G2	1

Pos	Code No.	Description	Qt
C607	A700235P9	CAP CER N150 4P7 .25P G1	1
C607	A700235P5	CAP CER N150 2P2 .25P G2	1
C608	A700235P8	CAP CER N150 3P9 .25P G1	1
C608	A700235P7	CAP CER N150 3P3 .25P G2	1
C609	A700235P7	CAP CER N150 3P3 .25P G1	1
C609	A700235P6	CAP CER N150 2P7 .25P G2	1
C610	A700235P10	CAP CER N150 5P6 .25P G1	1
C610	A700235P8	CAP CER N150 3P9 .25P G2	1
C611	21R13740A15	CAP CER NPO 3P3 .25P	1
C612	21R13740A19	CAP CER NPO 4P7 .25P	1
C613	J707444P6	CAP TA SOL 4U7 35V	1
C614	21R13740A03	CAP CER NPO 1P0 .25P	1
C615	21R13740A71	CAP CER NPO 470P 5%	1
C616	21R13741M13	CAP CER CL2 470P 10%	1
C617	21R13740A03	CAP CER NPO 1P0 .25P	1
C618	21R13740A21	CAP CER NPO 5P6 .25P	1
C619	21R13741M13	CAP CER CL2 470P 10%	1
C620	21R13740A11	CAP CER NPO 2P2 .25P	1
C621	21R13741M13	CAP CER CL2 470P 10%	1
C624	21R13740A63	CAP CER NPO 220P 5%	1
C625	21R13741C17	CAP CER CL2 100N 10%	1
C626	21R13741M21	CAP CER CL2 1N 10%	1
C627	21R13741M45	CAP CER CL2 10N 10%	1
C628	21R13740C21	CAP CER NPO 1N5 5%	1
C629	21R13740A59	CAP CER NPO 150P 5%	1
C630	21R13740A63	CAP CER NPO 220P 5%	1
C631	21R13740A63	CAP CER NPO 220P 5%	1
C632	21R13741C17	CAP CER CL2 100N 10%	1
C633	J707444P17	CAP TA SOL 47U 10V	1
C634	21R13741C17	CAP CER CL2 100N 10%	1
C635	21R13741M13	CAP CER CL2 470P 10%	1
C636	J707444P17	CAP TA SOL 47U 10V	1
C637	21R13741C17	CAP CER CL2 100N 10%	1
C639	21R13741A33	CAP CER CL2 3N3 10%	1
C640	J707412P9	CAP PYES 100N 10%	1
C641	J707412P13	CAP PYES 470N 10%	1
C642	J707412P13	CAP PYES 470N 10%	1
C643	21R13741C09	CAP CER CL2 47N 10%	1
C644	21R13740A13	CAP CER NPO 2P7 .25P	1
C652	21R13741M21	CAP CER CL2 1N 10%	1
C653	J707444P6	CAP TA SOL 4U7 35V	1
C656	21R13740A71	CAP CER NPO 470P 5%	1
C657	21R13741M13	CAP CER CL2 470P 10%	1
C659	21R13741M21	CAP CER CL2 1N 10%	1
C660	21R13741A41	CAP CER CL2 6N8 5%	1
C665	21R13741M13	CAP CER CL2 470P 10%	1
C666	21R13741M13	CAP CER CL2 470P 10%	1
C667	21R13741M13	CAP CER CL2 470P 10%	1
C668	21R13740A55	CAP CER NPO 100P 5%	1
C701	21R13740A37	CAP CER NPO 22P 5%	1
C702	J708702P22	CAP CER N750 56P 5%	1
C703	21R13740A63	CAP CER NPO 220P 5%	1
C704	21R13740A29	CAP CER NPO 10P 5%	1
C705	21R13741M21	CAP CER CL2 1N 10%	1
C706	21R13741M45	CAP CER CL2 10N 10%	1
C707	21R13740A21	CAP CER NPO 5P6 .25P	1
C708	21R13741M45	CAP CER CL2 10N 10%	1
C709	21R13741M45	CAP CER CL2 10N 10%	1
D100	A700047P3	DIO SI SIG 1N6263	1

Pos	Code No.	Description	Qt
D101	J706892P1	DIO SI PIN UM 9401	1
D102	J706892P1	DIO SI PIN UM 9401	1
D103	J707390P1	DIO SI SIG BAV 74	1
D300	J709100P2	DIO SI CAP BB 909B	1
D301	J709100P2	DIO SI CAP BB 909B	1
D302	J709100P2	DIO SI CAP BB 909B	1
D303	J709100P2	DIO SI CAP BB 909B	1
D304	J709100P2	DIO SI CAP BB 909B	1
D305	J709100P2	DIO SI CAP BB 909B	1
D306	J706007P1	DIO SI CAP BB 505B	1
D307	J706007P1	DIO SI CAP BB 505B	1
D401	A700025P8	DIO SI ZENR 6V8 5% 0.4W	1
D501	J706007P1	DIO SI CAP BB 505B	1
D502	J706007P1	DIO SI CAP BB 505B	1
D503	J706007P1	DIO SI CAP BB 505B	1
D504	J706007P1	DIO SI CAP BB 505B	1
D505	J707769P2	DIO SI CAP BBY 31	1
D601	J706007P1	DIO SI CAP BB 505B	1
D602	J706007P1	DIO SI CAP BB 505B	1
D603	J706007P1	DIO SI CAP BB 505B	1
D604	J706007P1	DIO SI CAP BB 505B	1
D605	J707389P1	DIO SI SIG BAV 99	1
D606	J708681P1	DIO SI SIG BAW 56	1
D607	J707390P1	DIO SI SIG BAV 74	1
D608	J707390P1	DIO SI SIG BAV 74	1
D610	J708681P1	DIO SI SIG BAW 56	1
D701	J707928P2	DIO SI CAP BB 809	1
D702	J707390P1	DIO SI SIG BAV 74	1
L100	A700024P1	COIL RF FIX 0.1UH 10%	1
L101	A700024P1	COIL RF FIX 0.1UH 10%	1
L102	K805653G4	COIL ASM 4 1/2T	1
L103	J707339G1	COIL FIX ASM	1
L104	A700024P1	COIL RF FIX 0.1UH 10%	1
L105	K805653G2	COIL ASM 2 1/2T	1
L106	J707256P1	COIL FIX	1
L107	J707339G1	COIL FIX ASM	1
L108	K805653G4	COIL ASM 4 1/2T G1	1
L108	K805653G2	COIL ASM 2 1/2T G2	1
L109	J707339G1	COIL FIX ASM	1
L110	J707256P3	COIL FIX	1
L112	J707339G1	COIL FIX ASM	1
L113	A700024P1	COIL RF FIX 0.1UH 10% G1	1
L113	A700024P13	COIL RF FIX 1.0UH 10% G2	1
L114	K805653G2	COIL ASM 2 1/2T G1	1
L114	K805653G4	COIL ASM 4 1/2T G2	1
L115	J709287P1	CORE TOR FERR	1
L116	J709287P1	CORE TOR FERR	1
L117	J709603P1	COIL	1
L118	J707339G1	COIL FIX ASM	1
L119	J709603P1	COIL	1
L120	J709603P1	COIL	1
L121	A700024P10	COIL RF FIX 0.56UH 10%	1
L122	A700024P25	COIL RF FIX 10UH 10%	1
L123	A700024P25	COIL RF FIX 10UH 10%	1
L124	K805653G5	COIL ASM 5 1/2T	1
L125	K805653G6	COIL ASM 6 1/2T	1
L126	K805653G3	COIL ASM 3 1/2T G1	1
L126	K805653G4	COIL ASM 4 1/2T G2	1
L127	A700024P25	COIL RF FIX 10UH 10%	1

Pos	Code No.	Description	Qt
L128	A700024P25	COIL RF FIX 10UH 10%	1
L129	A700024P10	COIL RF FIX 0.56UH 10%	1
L130	J707256P1	COIL FIX	1
L301	J709099P3	COIL RF VAR 3-1/2T TAP	1
L302	J709099P3	COIL RF VAR 3-1/2T TAP	1
L303	J707486P17	COIL RF FIX 0.39UH 10%	1
L304	J709099P4	COIL RF VAR 3-1/2T TAP	1
L305	J707486P2	COIL RF FIX 3.3UH 10%	1
L306	J709099P5	COIL RF VAR 3-1/2T TAP	1
L308	J709099P3	COIL RF VAR 3-1/2T TAP	1
L310	J709099P4	COIL RF VAR 3-1/2T TAP	1
L312	J708428P2	COIL RF VAR 45 MHZ	1
L313	J709099P4	COIL RF VAR 3-1/2T TAP	1
L314	J709099P3	COIL RF VAR 3-1/2T TAP	1
L401	J707486P10	COIL RF FIX 1.5UH 10%	1
L403	K805570G2	COIL ASM	1
L404	K805570G1	COIL ASM	1
L405	J708428P1	COIL RF VAR 45 MHZ	1
L406	K805570G3	COIL ASM	1
L407	A700024P25	COIL RF FIX 10UH 10%	1
L408	J708428P2	COIL RF VAR 45 MHZ	1
L409	J707431P1	COIL RF VAR 455KHZ 25%	1
L410	J707431P1	COIL RF VAR 455KHZ 25%	1
L501	A700024P13	COIL RF FIX 1.0UH 10%	1
L502	A700024P13	COIL RF FIX 1.0UH 10%	1
L503	A700024P13	COIL RF FIX 1.0UH 10%	1
L504	A700024P13	COIL RF FIX 1.0UH 10%	1
L505	L855671P1	COIL RADIO FREQUENCY	1
L506	A700024P13	COIL RF FIX 1.0UH 10%	1
L507	A700024P13	COIL RF FIX 1.0UH 10%	1
L508	A700024P1	COIL RF FIX 0.1UH 10%	1
L601	A700024P13	COIL RF FIX 1.0UH 10%	1
L602	A700024P13	COIL RF FIX 1.0UH 10%	1
L603	A700024P13	COIL RF FIX 1.0UH 10%	1
L604	A700024P13	COIL RF FIX 1.0UH 10%	1
L605	L855671P1	COIL RADIO FREQUENCY	1
L606	A700024P13	COIL RF FIX 1.0UH 10%	1
L607	A700024P13	COIL RF FIX 1.0UH 10%	1
L608	A700024P2	COIL RF FIX 0.12UH 10%	1
L609	K805653G10	COIL RF FIXED 10 1/2T G1	1
L609	K805653G6	COIL RF FIXED 6 1/2T G2	1
L701	K805570G4	COIL ASM	1
L702	A700024P43	COIL RF FIX 330UH 10%	1
L703	A700024P27	COIL RF FIX 15UH 10%	1
P102	J707064P112	CONN PWB FEM 12-CKT	1
P105	A701883P4	CONN PWB FEM RECP	1
Q100	J707388P1	TSTR NPN SI BFR 53	1
Q101	J707388P1	TSTR NPN SI BFR 53	1
Q102	A701940P1	TSTR NPN SI RF-PWR 0.4W	1
Q103	A700066P2	TSTR NPN SI RF-PWR 2.0W	1
Q104	J709163P1	TSTR NPN SI RF-PWR 10W	1
Q105	J709162P2	TSTR NPN SI RF-PWR 27W	1
Q106	J707432P1	TSTR PNP SI BCX 18	1
Q107	J707386P1	TSTR NPN SI BCW 32	1
Q108	J708406P1	TSTR NPN SI BD 233	1
Q109	J707386P1	TSTR NPN SI BCW 32	1
Q201	J707435P1	TSTR PNP SI BC 369	1
Q202	J707386P1	TSTR NPN SI BCW 32	1
Q203	J707432P1	TSTR PNP SI BCX 18	1

Pos	Code No.	Description	Qt
Q204	J707386P1	TSTR NPN SI BCW 32	1
Q301	J706011P2	TSTR NPN SI BFR 91A	1
Q302	J708315P1	TSTR JFET SI 2N5245	1
Q401	J707817P1	TSTR JFET SI J 309	1
Q402	J707817P1	TSTR JFET SI J 309	1
Q403	J707419P1	TSTR JFET SI BF511	1
Q404	J708418P1	TSTR NPN SI BFS 20	1
Q405	J708418P1	TSTR NPN SI BFS 20	1
Q406	J708418P1	TSTR NPN SI BFS 20	1
Q407	J707386P1	TSTR NPN SI BCW 32	1
Q408	J707387P1	TSTR PNP SI BCW 30	1
Q501	J707817P1	TSTR JFET SI J 309	1
Q502	J707388P1	TSTR NPN SI BFR 53	1
Q601	J707817P1	TSTR JFET SI J 309	1
Q602	J707388P1	TSTR NPN SI BFR 53	1
Q603	J708318P1	TSTR PNP SI BFT 92	1
Q604	J707433P1	TSTR MFET SI BF 989	1
Q605	J707386P1	TSTR NPN SI BCW 32	1
Q612	J707386P1	TSTR NPN SI BCW 32	1
Q613	J707386P1	TSTR NPN SI BCW 32	1
Q701	J707419P1	TSTR JFET SI BF511	1
Q702	J707387P1	TSTR PNP SI BCW 30	1
R100	J707385P122	RES MFLM 1/8W 1K2 5%	1
R101	J707385P472	RES MFLM 1/8W 4K7 5%	1
R102	J707385P270	RES MFLM 1/8W 27R 5%	1
R103	J707385P470	RES MFLM 1/8W 47R 5%	1
R104	J707385P102	RES MFLM 1/8W 1K0 5%	1
R105	J707385P182	RES MFLM 1/8W 1K8 5%	1
R106	J707385P470	RES MFLM 1/8W 47R 5%	1
R107	J707385P680	RES MFLM 1/8W 68R 5%	1
R108	J707385P560	RES MFLM 1/8W 56R 5%	1
R109	J707385P100	RES MFLM 1/8W 10R 5%	1
R110	J707385P100	RES MFLM 1/8W 10R 5%	1
R111	J707385P100	RES MFLM 1/8W 10R 5%	1
R112	J707385P100	RES MFLM 1/8W 10R 5%	1
R113	J707385P100	RES MFLM 1/8W 10R 5%	1
R114	J707385P947	RES MFLM 1/8W 4R7 20%	1
R115	J707385P100	RES MFLM 1/8W 10R 5%	1
R116	J707385P220	RES MFLM 1/8W 22R 5%	1
R117	J707385P220	RES MFLM 1/8W 22R 5%	1
R118	J707385P473	RES MFLM 1/8W 47K 5%	1
R119	J707385P820	RES MFLM 1/8W 82R 5%	1
R120	J707385P820	RES MFLM 1/8W 82R 5%	1
R121	J707385P333	RES MFLM 1/8W 33K 5%	1
R122	J707385P221	RES MFLM 1/8W 220R 5%	1
R123	J707385P221	RES MFLM 1/8W 220R 5%	1
R132	J708538P9	RES VAR CERM 200K 20%	1
R133	J708538P4	RES VAR CERM 5K0 20%	1
R134	J707385P100	RES MFLM 1/8W 10R 5%	1
R135	J706147P2	RES THERM PTC 80R 25%	1
R136	J707385P682	RES MFLM 1/8W 6K8 5%	1
R137	J707385P223	RES MFLM 1/8W 22K 5%	1
R138	J707385P472	RES MFLM 1/8W 4K7 5%	1
R139	J707385P472	RES MFLM 1/8W 4K7 5%	1
R140	J707385P333	RES MFLM 1/8W 33K 5%	1
R141	J707385P333	RES MFLM 1/8W 33K 5%	1
R142	J707385P104	RES MFLM 1/8W 100K 5%	1
R143	J707385P222	RES MFLM 1/8W 2K2 5%	1
R144	J707385P222	RES MFLM 1/8W 2K2 5%	1

Pos	Code No.	Description	Qt
R145	J707385P223	RES MFLM 1/8W 22K 5%	1
R146	J707385P104	RES MFLM 1/8W 100K 5%	1
R147	J707385P104	RES MFLM 1/8W 100K 5%	1
R148	J707385P123	RES MFLM 1/8W 12K 5%	1
R149	J707385P472	RES MFLM 1/8W 4K7 5%	1
R150	J707385P391	RES MFLM 1/8W 390R 5%	1
R151	J707385P683	RES MFLM 1/8W 68K 5%	1
R152	J707385P104	RES MFLM 1/8W 100K 5%	1
R153	J707385P472	RES MFLM 1/8W 4K7 5%	1
R154	J707385P274	RES MFLM 1/8W 270K 5%	1
R155	J707385P682	RES MFLM 1/8W 6K8 5%	1
R156	J707385P102	RES MFLM 1/8W 1K0 5%	1
R157	J707385P392	RES MFLM 1/8W 3K9 5%	1
R158	J707385P472	RES MFLM 1/8W 4K7 5%	1
R159	J707385P104	RES MFLM 1/8W 100K 5%	1
R160	J709725P1	RES THERM PTC 1K0	1
R161	J707385P271	RES MFLM 1/8W 270R 5%	1
R162	J707385P271	RES MFLM 1/8W 270R 5%	1
R163	J707385P471	RES MFLM 1/8W 470R 5%	1
R164	J707385P221	RES MFLM 1/8W 220R 5%	1
R165	J707385P221	RES MFLM 1/8W 220R 5%	1
R201	J707385P561	RES MFLM 1/8W 560R 5%	1
R202	J707385P271	RES MFLM 1/8W 270R 5%	1
R203	J707385P153	RES MFLM 1/8W 15K 5%	1
R204	J707385P153	RES MFLM 1/8W 15K 5%	1
R205	J707385P472	RES MFLM 1/8W 4K7 5%	1
R206	J707385P272	RES MFLM 1/8W 2K7 5%	1
R207	J707385P563	RES MFLM 1/8W 56K 5%	1
R208	J707385P563	RES MFLM 1/8W 56K 5%	1
R209	J707385P271	RES MFLM 1/8W 270R 5%	1
R301	J707385P102	RES MFLM 1/8W 1K0 5% G1	1
R301	J707385P182	RES MFLM 1/8W 1K8 5% G2	1
R302	J707385P561	RES MFLM 1/8W 560R 5%	1
R303	J707385P104	RES MFLM 1/8W 100K 5%	1
R304	J707385P104	RES MFLM 1/8W 100K 5%	1
R305	J707385P900	RES MFLM 1/8W 0R JUMPER	1
R306	J707385P222	RES MFLM 1/8W 2K2 5%	1
R307	J707385P681	RES MFLM 1/8W 680R 5%	1
R308	J707385P470	RES MFLM 1/8W 47R 5%	1
R309	J707385P270	RES MFLM 1/8W 27R 5%	1
R310	J707385P104	RES MFLM 1/8W 100K 5%	1
R311	J707385P560	RES MFLM 1/8W 56R 5%	1
R312	J707385P104	RES MFLM 1/8W 100K 5%	1
R314	J707385P104	RES MFLM 1/8W 100K 5%	1
R316	J707385P104	RES MFLM 1/8W 100K 5%	1
R317	J707385P182	RES MFLM 1/8W 1K8 5%	1
R318	J707385P100	RES MFLM 1/8W 10R 5%	1
R319	J707385P101	RES MFLM 1/8W 100R 5%	1
R321	J707385P270	RES MFLM 1/8W 27R 5%	1
R322	J707385P391	RES MFLM 1/8W 390R 5% G1	1
R322	J707385P471	RES MFLM 1/8W 470R 5% G2	1
R323	J707385P104	RES MFLM 1/8W 100K 5%	1
R324	J707385P104	RES MFLM 1/8W 100K 5%	1
R325	J707385P100	RES MFLM 1/8W 10R 5%	1
R326	J707385P392	RES MFLM 1/8W 3K9 5%	1
R327	J707385P102	RES MFLM 1/8W 1K0 5%	1
R401	J707385P560	RES MFLM 1/8W 56R 5%	1
R402	J707385P100	RES MFLM 1/8W 10R 5%	1
R403	J707385P332	RES MFLM 1/8W 3K3 5%	1

Pos	Code No.	Description	Qt
R405	J707385P100	RES MFLM 1/8W 10R 5%	1
R406	J707385P820	RES MFLM 1/8W 82R 5%	1
R407	J707385P470	RES MFLM 1/8W 47R 5%	1
R408	J707385P470	RES MFLM 1/8W 47R 5%	1
R410	J707385P272	RES MFLM 1/8W 2K7 5%	1
R411	J707385P682	RES MFLM 1/8W 6K8 5%	1
R412	J707385P272	RES MFLM 1/8W 2K7 5%	1
R413	J707385P471	RES MFLM 1/8W 470R 5%	1
R414	J707385P220	RES MFLM 1/8W 22R 5%	1
R415	J707385P222	RES MFLM 1/8W 2K2 5%	1
R416	J707385P562	RES MFLM 1/8W 5K6 5%	1
R417	J707385P103	RES MFLM 1/8W 10K 5%	1
R418	J707385P153	RES MFLM 1/8W 15K 5%	1
R419	J707385P182	RES MFLM 1/8W 1K8 5%	1
R420	J707385P182	RES MFLM 1/8W 1K8 5%	1
R421	J707385P182	RES MFLM 1/8W 1K8 5%	1
R422	J707385P473	RES MFLM 1/8W 47K 5%	1
R423	J707385P153	RES MFLM 1/8W 15K 5%	1
R424	J708538P5	RES VAR CERM 10K 20%	1
R425	J707385P272	RES MFLM 1/8W 2K7 5%	1
R426	J707385P473	RES MFLM 1/8W 47K 5%	1
R427	J707385P473	RES MFLM 1/8W 47K 5%	1
R428	J707385P563	RES MFLM 1/8W 56K 5%	1
R429	J707385P104	RES MFLM 1/8W 100K 5%	1
R430	J707385P334	RES MFLM 1/8W 330K 5%	1
R431	J707385P473	RES MFLM 1/8W 47K 5%	1
R432	J707385P473	RES MFLM 1/8W 47K 5%	1
R433	J707385P271	RES MFLM 1/8W 270R 5%	1
R434	J707385P102	RES MFLM 1/8W 1K0 5%	1
R435	J706147P3	RES THERM PTC 250R 25%	1
R436	J707385P392	RES MFLM 1/8W 3K9 5%	1
R437	J707406P7	RES THERM NTC 220R 10%	1
R438	J707385P222	RES MFLM 1/8W 2K2 5%	1
R439	J707385P392	RES MFLM 1/8W 3K9 5%	1
R440	J707385P392	RES MFLM 1/8W 3K9 5%	1
R441	J707385P101	RES MFLM 1/8W 100R 5%	1
R442	J708538P6	RES VAR CERM 20K 20%	1
R444	J707385P473	RES MFLM 1/8W 47K 5%	1
R445	J707385P273	RES MFLM 1/8W 27K 5%	1
R446	J707385P224	RES MFLM 1/8W 220K 5%	1
R447	J707385P392	RES MFLM 1/8W 3K9 5%	1
R448	J707385P101	RES MFLM 1/8W 100R 5%	1
R449	J707385P470	RES MFLM 1/8W 47R 5%	1
R450	J707385P103	RES MFLM 1/8W 10K 5%	1
R451	J707385P332	RES MFLM 1/8W 3K3 5%	1
R452	J707385P332	RES MFLM 1/8W 3K3 5%	1
R501	J707385P122	RES MFLM 1/8W 1K2 5%	1
R502	J707385P122	RES MFLM 1/8W 1K2 5%	1
R503	J707385P122	RES MFLM 1/8W 1K2 5%	1
R504	J707385P104	RES MFLM 1/8W 100K 5%	1
R505	J707385P104	RES MFLM 1/8W 100K 5%	1
R506	J707385P104	RES MFLM 1/8W 100K 5%	1
R508	J707385P103	RES MFLM 1/8W 10K 5%	1
R509	J707385P910	RES MFLM 1/8W 1R0 20%	1
R510	J707385P332	RES MFLM 1/8W 3K3 5%	1
R512	J707385P561	RES MFLM 1/8W 560R 5%	1
R513	J707385P183	RES MFLM 1/8W 18K 5%	1
R514	J707385P472	RES MFLM 1/8W 4K7 5%	1
R515	J707385P470	RES MFLM 1/8W 47R 5%	1

Pos	Code No.	Description	Qt
R517	J707385P101	RES MFLM 1/8W 100R 5%	1
R518	J707385P470	RES MFLM 1/8W 47R 5%	1
R519	J707385P470	RES MFLM 1/8W 47R 5%	1
R529	J707385P392	RES MFLM 1/8W 3K9 5%	1
R601	J707385P122	RES MFLM 1/8W 1K2 5%	1
R602	J707385P122	RES MFLM 1/8W 1K2 5%	1
R603	J707385P122	RES MFLM 1/8W 1K2 5%	1
R604	J707385P104	RES MFLM 1/8W 100K 5%	1
R605	J707385P104	RES MFLM 1/8W 100K 5%	1
R606	J707385P104	RES MFLM 1/8W 100K 5%	1
R607	J707385P561	RES MFLM 1/8W 560R 5%	1
R608	J707385P221	RES MFLM 1/8W 220R 5%	1
R609	J707385P472	RES MFLM 1/8W 4K7 5%	1
R610	J707385P183	RES MFLM 1/8W 18K 5%	1
R611	J707385P271	RES MFLM 1/8W 270R 5%	1
R612	J707385P102	RES MFLM 1/8W 1K0 5%	1
R613	J707385P101	RES MFLM 1/8W 100R 5%	1
R614	J707385P561	RES MFLM 1/8W 560R 5%	1
R615	J707385P272	RES MFLM 1/8W 2K7 5%	1
R616	J707385P470	RES MFLM 1/8W 47R 5%	1
R617	J707385P683	RES MFLM 1/8W 68K 5%	1
R618	J707385P683	RES MFLM 1/8W 68K 5%	1
R619	J707385P104	RES MFLM 1/8W 100K 5%	1
R620	J707385P271	RES MFLM 1/8W 270R 5% G1	1
R620	J707385P681	RES MFLM 1/8W 680R 5% G2	1
R621	J707385P561	RES MFLM 1/8W 560R 5% G1	1
R621	J707385P331	RES MFLM 1/8W 330R 5% G2	1
R622	J707385P102	RES MFLM 1/8W 1K0 5%	1
R623	J707385P224	RES MFLM 1/8W 220K 5%	1
R624	J707385P223	RES MFLM 1/8W 22K 5%	1
R625	J707385P470	RES MFLM 1/8W 47R 5%	1
R626	J707385P100	RES MFLM 1/8W 10R 5%	1
R627	J707385P103	RES MFLM 1/8W 10K 5%	1
R628	J707385P224	RES MFLM 1/8W 220K 5%	1
R629	J707385P393	RES MFLM 1/8W 39K 5%	1
R630	J707385P100	RES MFLM 1/8W 10R 5%	1
R631	J707385P824	RES MFLM 1/8W 820K 5%	1
R632	J707385P223	RES MFLM 1/8W 22K 5%	1
R633	J707385P824	RES MFLM 1/8W 820K 5%	1
R634	J707385P123	RES MFLM 1/8W 12K 5%	1
R635	J707385P102	RES MFLM 1/8W 1K0 5%	1
R636	J707385P332	RES MFLM 1/8W 3K3 5%	1
R637	J707385P181	RES MFLM 1/8W 180R 5%	1
R638	J707385P154	RES MFLM 1/8W 150K 5%	1
R639	J707385P682	RES MFLM 1/8W 6K8 5%	1
R640	J707385P105	RES MFLM 1/8W 1M0 10%	1
R641	J707385P184	RES MFLM 1/8W 180K 5%	1
R642	J707385P184	RES MFLM 1/8W 180K 5%	1
R643	J707385P105	RES MFLM 1/8W 1M0 10%	1
R644	J707385P473	RES MFLM 1/8W 47K 5% G1	1
R644	J707385P563	RES MFLM 1/8W 56K 5% G2	1
R645	J707385P103	RES MFLM 1/8W 10K 5%	1
R646	J707385P562	RES MFLM 1/8W 5K6 5% G1	1
R646	J707385P472	RES MFLM 1/8W 4K7 5% G2	1
R647	J707385P333	RES MFLM 1/8W 33K 5%	1
R648	J707385P823	RES MFLM 1/8W 82K 5% G1	1
R648	J707385P683	RES MFLM 1/8W 68K 5% G2	1
R649	J707385P393	RES MFLM 1/8W 39K 5% G1	1
R649	J707385P563	RES MFLM 1/8W 56K 5% G2	1

Pos	Code No.	Description	Qt
R650	J707385P333	RES MFLM 1/8W 33K 5% G1	1
R650	J707385P273	RES MFLM 1/8W 27K 5% G2	1
R651	J707385P273	RES MFLM 1/8W 27K 5% G1	1
R651	J707385P183	RES MFLM 1/8W 18K 5% G2	1
R652	J707385P103	RES MFLM 1/8W 10K 5%	1
R653	J707385P333	RES MFLM 1/8W 33K 5%	1
R654	J707385P562	RES MFLM 1/8W 5K6 5%	1
R655	J707385P183	RES MFLM 1/8W 18K 5%	1
R656	J707385P393	RES MFLM 1/8W 39K 5%	1
R657	J707385P823	RES MFLM 1/8W 82K 5%	1
R658	J707385P154	RES MFLM 1/8W 150K 5%	1
R659	J707385P223	RES MFLM 1/8W 22K 5% G1	1
R659	J707385P153	RES MFLM 1/8W 15K 5% G2	1
R660	J707385P333	RES MFLM 1/8W 33K 5% G1	1
R660	J707385P273	RES MFLM 1/8W 27K 5% G2	1
R661	J707385P333	RES MFLM 1/8W 33K 5% G1	1
R661	J707385P273	RES MFLM 1/8W 27K 5% G2	1
R662	J707385P473	RES MFLM 1/8W 47K 5%	1
R663	J708538P6	RES VAR CERM 20K 20%	1
R664	J707385P683	RES MFLM 1/8W 68K 5% G1	1
R664	J707385P393	RES MFLM 1/8W 39K 5% G2	1
R665	J707385P824	RES MFLM 1/8W 820K 5%	1
R666	J707385P124	RES MFLM 1/8W 120K 5%	1
R667	J707385P124	RES MFLM 1/8W 120K 5%	1
R668	J707385P122	RES MFLM 1/8W 1K2 5%	1
R669	J707385P221	RES MFLM 1/8W 220R 5%	1
R670	J707385P103	RES MFLM 1/8W 10K 5%	1
R671	J707385P562	RES MFLM 1/8W 5K6 5%	1
R672	J707385P822	RES MFLM 1/8W 8K2 5%	1
R673	J707385P822	RES MFLM 1/8W 8K2 5%	1
R674	J707385P101	RES MFLM 1/8W 100R 5%	1
R675	J708538P5	RES VAR CERM 10K 20%	1
R676	J707385P123	RES MFLM 1/8W 12K 5%	1
R677	J708538P5	RES VAR CERM 10K 20%	1
R678	J707385P470	RES MFLM 1/8W 47R 5%	1
R679	J707385P821	RES MFLM 1/8W 820R 5%	1
R680	J708538P5	RES VAR CERM 10K 20%	1
R681	J707385P223	RES MFLM 1/8W 22K 5%	1
R682	J707385P152	RES MFLM 1/8W 1K5 5%	1
R683	J707385P223	RES MFLM 1/8W 22K 5%	1
R684	J707385P183	RES MFLM 1/8W 18K 5%	1
R685	J707385P183	RES MFLM 1/8W 18K 5%	1
R686	J707385P103	RES MFLM 1/8W 10K 5%	1
R687	J707385P103	RES MFLM 1/8W 10K 5%	1
R689	J707385P105	RES MFLM 1/8W 1M0 10%	1
R690	J707385P124	RES MFLM 1/8W 120K 5%	1
R691	J707385P273	RES MFLM 1/8W 27K 5%	1
R692	J707385P223	RES MFLM 1/8W 22K 5%	1
R693	J707385P105	RES MFLM 1/8W 1M0 10%	1
R694	J707385P223	RES MFLM 1/8W 22K 5%	1
R695	J707385P105	RES MFLM 1/8W 1M0 10%	1
R696	J707385P223	RES MFLM 1/8W 22K 5%	1
R697	J707385P105	RES MFLM 1/8W 1M0 10%	1
R698	J707385P103	RES MFLM 1/8W 10K 5%	1
R701	J708666P1	RES THERM NTC 5K 2%	1
R702	A701250P413	RES MFLM 1/4W 133K 1%	1
R703	A701250P213	RES MFLM 1/4W 1K33 1%	1
R704	A701250P325	RES MFLM 1/4W 17K8 1%	1
R705	J708666P2	RES THERM NTC 20K 2%	1

Pos	Code No.	Description	Qt
R706	J708666P2	RES THERM NTC 20K 2%	1
R707	J707385P104	RES MFLM 1/8W 100K 5%	1
R708	J707385P105	RES MFLM 1/8W 1MO 10%	1
R709	J707385P181	RES MFLM 1/8W 180R 5%	1
R710	J707385P101	RES MFLM 1/8W 100R 5%	1
R711	J707385P223	RES MFLM 1/8W 22K 5%	1
R712	J707385P154	RES MFLM 1/8W 150K 5%	1
R713	J707385P821	RES MFLM 1/8W 820R 5%	1
R714	J707385P104	RES MFLM 1/8W 100K 5%	1
U100	J708165P2	IC LIN OP-AMP 324	1
U201	J708333P1	IC LIN VR FIX 4785	1
U401	J707449P1	IC LIN IF-AMP 3357	1
U402	M905766G2	INT CKT SQ 4003	1
U601	J707859P1	IC LIN OP-AMP 204	1
U602	J707859P1	IC LIN OP-AMP 204	1
U603	J707859P1	IC LIN OP-AMP 204	1
U604	J707859P1	IC LIN OP-AMP 204	1
U606	J707243P1	IC DIG REG 4094	1
U607	J707374P4	IC PLL PRESC 12018	1
U608	B800902P1	IC PLL SYN CUSTOM DES	1
U609	J707859P1	IC LIN OP-AMP 204	1
U610	J708503P2	IC LIN CMPAR LM 339	1
U615	J708621P2	CPLR OPTO PC 827	1
U616	J708503P2	IC LIN CMPAR LM 339	1
W001	A700184P1	RES WIRE JMPR OR JUMPER	1
W003	J707256P1	COIL FIX	1
W004	J707256P1	COIL FIX	1
W005	J708717P1	STRAP	1
W006	J708716P2	STRAP	1
W007	J708716P2	STRAP	1
W008	J708716P2	STRAP	1
W009	J708716P2	STRAP	1
Y401	J708426P2	CRYSTAL UNIT 45.4550MHZ	1
Y701	J707567P19	CRYSTAL UNIT 7.4000MHZ	1
Z401	J708330P3	FLTR CRY 45.0 +/-3.75KHZ	1
Z402	J707446P4	FLTR CER 455K +/- 4.5KHZ	1
Z403	J707446P4	FLTR CER 455K +/- 4.5KHZ	1
	M905903P1R2	BOARD PW	1
		NON REFERENCED ITEMS:	
	J708966G1	HEAT SINK MODF	1
	K805569G2	SHIELD METALLIZED	1
	J706281P6	CORE SCREW FERR U 10	8
	J708561P3	COIL FIXED	1
	J708561P3	COIL FIXED	1
	J708561P3	COIL FIXED	1
	J706804P3	WASH INS CRYS FOR HC-45/U	2
	J706804P2	WASH INS CRYS FOR HC-18/U	2

Pos	Code No.	Description	Qt

PARTS LIST FOR RADIO FREQUENCY UNIT RF6774L/H : M905902GX BD REV. 2

Pos	Code No.	Description	Qt
	.	COMPONENTS REVISED SINCE LAST EDITION ARE MARKED ✱	
----	----------	----------	---
			REV
	M905902G1	RF6774S25L 200MHZ LOW BAND	E
	M905902G2	RF6774S25H 200MHZ HIGH BAND	H
----	----------	----------	---
C100	J707809P13	CAP CER NPO 10P 5%	1
C101	J707436P77	CAP CER NPO 470P 5%	1
C102	J707809P8	CAP CER NPO 3P9 .25P	1
C103	J707809P22	CAP CER NPO 56P 5% G1	1
C103	J707809P19	CAP CER NPO 33P 5% G2	1
C104	J707809P18	CAP CER NPO 27P 5%	1
C106	J707438P14	CAP CER CL2 10N 10%	1
C107	J707809P21	CAP CER NPO 47P 5% G1	1
C107	J707809P19	CAP CER NPO 33P 5% G2	1
C108	J707809P21	CAP CER NPO 47P 5%	1
C109	J707809P16	CAP CER NPO 18P 5% G1	1
C109	J707809P13	CAP CER NPO 10P 5% G2	1
C110	J707438P14	CAP CER CL2 10N 10%	1
C111	J707809P25	CAP CER NPO 100P 5%	1
C112	J707436P77	CAP CER NPO 470P 5%	1
C113	J707809P17	CAP CER NPO 22P 5%	1
C114	J707809P25	CAP CER NPO 100P 5%	1
C115	J707809P24	CAP CER NPO 82P 5%	1
C116	J707438P26	CAP CER CL2 100N 10%	1
C117	J707809P26	CAP CER NPO 120P 5%	1
C119	J707436P77	CAP CER NPO 470P 5%	1
C120	J707809P11	CAP CER NPO 6P8 .25P G1	1
C120	J707809P10	CAP CER NPO 5P6 .25P G2	1
C121	J707809P14	CAP CER NPO 12P 5% G1	1
C121	J707809P13	CAP CER NPO 10P 5% G2	1
C122	A700006P38	CAP MICA 150P 5%	1
C123	J707438P14	CAP CER CL2 10N 10%	1
C124	J707809P27	CAP CER NPO 150P 5%	1
C125	J707436P77	CAP CER NPO 470P 5%	1
C126	J707438P14	CAP CER CL2 10N 10%	1
C127	J707353P6	CAP ELECT 4U7 25V	1
C128	J707809P27	CAP CER NPO 150P 5%	1
C129	J707809P27	CAP CER NPO 150P 5%	1
C130	A700006P17	CAP MICA 22P 5% G1	1
C130	A700006P6	CAP MICA 10P 5% G2	1
C131	J707809P11	CAP CER NPO 6P8 .25P G1	1
C131	J707809P8	CAP CER NPO 3P9 .25P G2	1
C132	A700006P38	CAP MICA 150P 5%	1
C133	J707438P14	CAP CER CL2 10N 10%	1
C134	J707809P27	CAP CER NPO 150P 5%	1
C135	J707436P77	CAP CER NPO 470P 5%	1
C136	A700006P35	CAP MICA 110P 5% ✱	1
C136		G2 DELETED ✱	
C137	A700006P17	CAP MICA 22P 5%	1
C138	J707809P27	CAP CER NPO 150P 5%	1
C139	J707809P27	CAP CER NPO 150P 5%	1
C140	J707809P27	CAP CER NPO 150P 5%	1
C141	J707809P27	CAP CER NPO 150P 5%	1
C142	A700006P4	CAP PTFE 8P2 10%	1
C143	A700006P19	CAP MICA 27P 5% G1	1
C143	A700006P18	CAP MICA 24P 5% G2	1
C144	A700006P17	CAP MICA 22P 5%	1
C145	A700006P1	CAP PTFE 4P7 10% G1	1
C145	A700006P4	CAP PTFE 8P2 10% G2	1
C146	J707436P77	CAP CER NPO 470P 5%	1
C147	J707436P77	CAP CER NPO 470P 5%	1
C148	J707436P77	CAP CER NPO 470P 5%	1
C149	J707436P77	CAP CER NPO 470P 5%	1
C150	J707809P1	CAP CER NPO 1P0 .25P	1
C151	J707809P1	CAP CER NPO 1P0 .25P	1
C152	J707436P77	CAP CER NPO 470P 5%	1
C153	J707436P77	CAP CER NPO 470P 5%	1
C154	J707436P77	CAP CER NPO 470P 5%	1
C155	J707436P77	CAP CER NPO 470P 5%	1
C156	J707353P3	CAP ELECT 0U47 50V	1
C157	J707436P77	CAP CER NPO 470P 5%	1
C158	J707436P77	CAP CER NPO 470P 5%	1
C159	J707438P7	CAP CER CL2 2N2 10%	1
C160	J707436P77	CAP CER NPO 470P 5%	1
C161	J707438P14	CAP CER CL2 10N 10%	1
C162	J707438P14	CAP CER CL2 10N 10%	1
C163	J707438P20	CAP CER CL2 33N 10%	1
C164	J707436P77	CAP CER NPO 470P 5%	1
C165	J707809P22	CAP CER NPO 56P 5%	1
C166	J707436P77	CAP CER NPO 470P 5%	1
C167	J707809P8	CAP CER NPO 3P9 .25P	1
C168	A700006P38	CAP MICA 150P 5% G1	1
C168	A700006P36	CAP MICA 120P 5% G2	1
C169	J707438P14	CAP CER CL2 10N 10%	1
C170	A700006P30	CAP MICA 68P 5%	1
C172	J707438P14	CAP CER CL2 10N 10%	1
C173	J707436P77	CAP CER NPO 470P 5%	1
C174	J707438P7	CAP CER CL2 2N2 10%	1
C175	J707438P5	CAP CER CL2 1N 10%	1
C176	J707438P14	CAP CER CL2 10N 10%	1
C201	J707438P26	CAP CER CL2 100N 10%	1
C202	J707444P8	CAP TA SOL 22U 16V	1
C203	J707444P6	CAP TA SOL 4U7 35V	1
C204	J707436P77	CAP CER NPO 470P 5%	1
C205	J707412P9	CAP PYES 100N 10%	1
C301	J707436P3	CAP CER NPO 1P5 .25P	1
C302	J707438P5	CAP CER CL2 1N 10%	1
C304	J707436P7	CAP CER NPO 3P3 .25P G1	1
C304	J707436P3	CAP CER NPO 1P5 .25P G2	1
C305	J707436P12	CAP CER NPO 8P2 .25P	1
C306	J707483P5	CAP PHEN 0P68 5% G1	1
C306	J707483P1	CAP PHEN 0P47 5% G2	1
C307	J707438P5	CAP CER CL2 1N 10%	1
C309	J707436P12	CAP CER NPO 8P2 .25P	1
C310	J707438P5	CAP CER CL2 1N 10%	1
C311	J707438P5	CAP CER CL2 1N 10%	1
C312	J707436P87	CAP CER NPO 1N2 5%	1
C314	J707436P7	CAP CER NPO 3P3 .25P G1	1
C314	J707436P3	CAP CER NPO 1P5 .25P G2	1
C315	J707438P5	CAP CER CL2 1N 10%	1
C316	J707436P5	CAP CER NPO 2P2 .25P G1	1
C316	J707436P4	CAP CER NPO 1P8 .25P G2	1
C317	J707444P2	CAP TA SOL 0U22 35V	1

Pos	Code No.	Description	Qt
C318	J707438P5	CAP CER CL2 1N 10%	1
C319	J707436P12	CAP CER NPO 8P2 .25P	1
C320	J707438P5	CAP CER CL2 1N 10%	1
C322	J707483P7	CAP PHEN 1P00 5% G1	1
C322	J707483P6	CAP PHEN 0P82 5% G2	1
C323	J707483P4	CAP PHEN 0P56 5%	1
C324	J707436P4	CAP CER NPO 1P8 .25P G1	1
C324	J707436P3	CAP CER NPO 1P5 .25P G2	1
C325	J707438P5	CAP CER CL2 1N 10%	1
C326	J707436P12	CAP CER NPO 8P2 .25P	1
C328	J707436P12	CAP CER NPO 8P2 .25P	1
C331	J707436P12	CAP CER NPO 8P2 .25P	1
C332	J707436P12	CAP CER NPO 8P2 .25P	1
C333	J707436P5	CAP CER NPO 2P2 .25P G1	1
C333	J707436P4	CAP CER NPO 1P8 .25P G2	1
C335	J707438P5	CAP CER CL2 1N 10%	1
C338	J707436P11	CAP CER NPO 6P8 .25P	1
C339	J707438P5	CAP CER CL2 1N 10%	1
C340	J707438P8	CAP CER CL2 3N3 10%	1
C345	J707436P37	CAP CER NPO 33P 5%	1
C347	J707438P5	CAP CER CL2 1N 10%	1
C348	J707438P5	CAP CER CL2 1N 10%	1
C350	J707436P3	CAP CER NPO 1P5 .25P G1	1
C350	J707436P1	CAP CER NPO 1P0 .25P G2	1
C351	J707436P10	CAP CER NPO 5P6 .25P G1	1
C351	J707436P9	CAP CER NPO 4P7 .25P G2	1
C353	J707483P2	CAP PHEN 0P33 5%	1
C354	J707436P10	CAP CER NPO 5P6 .25P G1	1
C354	J707436P9	CAP CER NPO 4P7 .25P G2	1
C355	J707483P7	CAP PHEN 1P00 5% G1	1
C355	J707483P13	CAP PHEN 0P22 10% G2	1
C356	J707438P5	CAP CER CL2 1N 10%	1
C357	J707436P1	CAP CER NPO 1P0 .25P	1
C358	J707436P1	CAP CER NPO 1P0 .25P	1
C401	J707438P8	CAP CER CL2 3N3 10%	1
C402	J707438P8	CAP CER CL2 3N3 10%	1
C403	J707438P8	CAP CER CL2 3N3 10%	1
C404	J707436P9	CAP CER NPO 4P7 .25P	1
C405	J707438P26	CAP CER CL2 100N 10%	1
C406	J707436P10	CAP CER NPO 5P6 .25P	1
C407	J707436P9	CAP CER NPO 4P7 .25P	1
C408	J707438P5	CAP CER CL2 1N 10%	1
C409	J707438P8	CAP CER CL2 3N3 10%	1
C410	J707444P8	CAP TA SOL 22U 16V	1
C411	J707438P26	CAP CER CL2 100N 10%	1
C412	J707438P26	CAP CER CL2 100N 10%	1
C413	J707436P21	CAP CER NPO 15P 5%	1
C414	J707438P8	CAP CER CL2 3N3 10%	1
C415	J707438P8	CAP CER CL2 3N3 10%	1
C416	J708702P16	CAP CER N750 18P 5%	1
C417	J707436P49	CAP CER NPO 56P 5%	1
C418	J707438P14	CAP CER CL2 10N 10%	1
C419	J707438P26	CAP CER CL2 100N 10%	1
C420	J707438P14	CAP CER CL2 10N 10%	1
C421	J707438P26	CAP CER CL2 100N 10%	1
C422	J707438P26	CAP CER CL2 100N 10%	1
C423	J707436P13	CAP CER NPO 10P 5%	1
C424	J707438P8	CAP CER CL2 3N3 10%	1
C425	J707412P13	CAP PYES 470N 10%	1
C426	J707436P93	CAP CER NPO 2N2 5%	1
C427	J707436P73	CAP CER NPO 330P 5%	1
C428	J707436P69	CAP CER NPO 220P 5%	1
C429	J707438P14	CAP CER CL2 10N 10%	1
C430	J707444P8	CAP TA SOL 22U 16V	1
C431	J707444P8	CAP TA SOL 22U 16V	1
C432	J707438P26	CAP CER CL2 100N 10%	1
C433	J707438P26	CAP CER CL2 100N 10%	1
C434	J707438P8	CAP CER CL2 3N3 10%	1
C435	J707436P1	CAP CER NPO 1P0 .25P	1
C436	J707438P26	CAP CER CL2 100N 10%	1
C501	J707412P11	CAP PYES 220N 10%	1
C502	J707412P11	CAP PYES 220N 10%	1
C503	J707412P11	CAP PYES 220N 10%	1
C504	A700235P4	CAP CER N150 1P8 .25P	1
C505	A700235P4	CAP CER N150 1P8 .25P G1	1
C505	A700235P8	CAP CER N150 3P9 .25P G2	1
C506	A700235P8	CAP CER N150 3P9 .25P G1	1
C506	A700235P7	CAP CER N150 3P3 .25P G2	1
C507	A700235P8	CAP CER N150 3P9 .25P G1	1
C507	A700235P9	CAP CER N150 4P7 .25P G2	1
C508	A700235P12	CAP CER N150 8P2 .25P G1	1
C508	A700235P10	CAP CER N150 5P6 .25P G2	1
C509	A700235P32	CAP CER N150 11P 5% G1	1
C509	A700235P10	CAP CER N150 5P6 5% G2 ✱	1
C510	A700235P12	CAP CER N150 8P2 .25P G1	1
C510	A700235P11	CAP CER N150 6P8 .25P G2	1
C512	J707483P7	CAP PHEN 1P00 5%	1
C513	J707438P3	CAP CER CL2 470P 10%	1
C515	J707436P9	CAP CER NPO 4P7 .25P	1
C516	J707436P7	CAP CER NPO 3P3 .25P	1
C517	J707444P6	CAP TA SOL 4U7 35V	1
C518	J707436P6	CAP CER NPO 2P7 .25P G1	1
C518	J707436P5	CAP CER NPO 2P2 .25P G2	1
C519	J707438P3	CAP CER CL2 470P 10%	1
C520	J707436P6	CAP CER NPO 2P7 .25P G1	1
C520	J707436P5	CAP CER NPO 2P2 .25P G2	1
C521	J707436P11	CAP CER NPO 6P8 .25P	1
C522	J707438P3	CAP CER CL2 470P 10%	1
C523	J707436P2	CAP CER NPO 1P2 .25P G1	1
C523	J707436P4	CAP CER NPO 1P8 .25P G2 ✱	1
C524	J707438P3	CAP CER CL2 470P 10%	1
C525	J707438P3	CAP CER CL2 470P 10%	1
C526	J707438P3	CAP CER CL2 470P 10%	1
C527	J707438P3	CAP CER CL2 470P 10%	1
C528	J707438P3	CAP CER CL2 470P 10%	1
C540	J707438P3	CAP CER CL2 470P 10%	1
C541	J707438P3	CAP CER CL2 470P 10%	1
C542	J707438P3	CAP CER CL2 470P 10%	1
C543	J707438P3	CAP CER CL2 470P 10%	1
C544	J707438P3	CAP CER CL2 470P 10%	1
C545	J707438P3	CAP CER CL2 470P 10%	1
C601	J707412P11	CAP PYES 220N 10%	1
C602	J707412P11	CAP PYES 220N 10%	1
C603	J707412P11	CAP PYES 220N 10%	1
C604	A700235P2	CAP CER NPO 1P2 .25P	1
C605		G2 DELETED ✱	
C606	A700235P6	CAP CER N150 2P7 .25P G1	1
C606	A700235P5	CAP CER N150 2P2 .25P G2 ✱	1

Pos	Code No.	Description	Qt
C607	A700235P9	CAP CER N150 4P7 .25P G1	1
C607	A700235P5	CAP CER N150 2P2 .25P G2 *	1
C608	A700235P8	CAP CER N150 3P9 .25P G1	1
C608	A700235P7	CAP CER N150 3P3 .25P G2	1
C609	A700235P7	CAP CER N150 3P3 .25P G1 *	1
C609	A700235P6	CAP CER N150 2P7 .25P G2 *	1
C610	A700235P10	CAP CER N150 5P6 .25P G1	1
C610	A700235P8	CAP CER N150 3P9 .25P G2	1
C611	J707436P7	CAP CER NP0 3P3 .25P	1
C612	J707436P9	CAP CER NP0 4P7 .25P	1
C613	J707444P6	CAP TA SOL 4U7 35V	1
C614	J707436P1	CAP CER NP0 1P0 .25P	1
C615	J707436P77	CAP CER NP0 470P 5%	1
C616	J707438P3	CAP CER CL2 470P 10%	1
C617	J707436P1	CAP CER NP0 1P0 .25P	1
C618	J707436P10	CAP CER NP0 5P6 .25P	1
C619	J707438P3	CAP CER CL2 470P 10%	1
C620	J707436P5	CAP CER NP0 2P2 .25P	1
C621	J707438P3	CAP CER CL2 470P 10%	1
C624	J707436P69	CAP CER NP0 220P 5%	1
C625	J707438P26	CAP CER CL2 100N 10%	1
C626	J707438P5	CAP CER CL2 1N 10%	1
C627	J707438P14	CAP CER CL2 10N 10%	1
C628	J707436P89	CAP CER NP0 1N5 5%	1
C629	J707436P65	CAP CER NP0 150P 5%	1
C630	J707436P69	CAP CER NP0 220P 5%	1
C631	J707436P69	CAP CER NP0 220P 5%	1
C632	J707438P26	CAP CER CL2 100N 10%	1
C633	J707444P17	CAP TA SOL 47U 10V	1
C634	J707438P26	CAP CER CL2 100N 10%	1
C635	J707438P3	CAP CER CL2 470P 10%	1
C636	J707444P17	CAP TA SOL 47U 10V	1
C637	J707438P26	CAP CER CL2 100N 10%	1
C639	J707438P8	CAP CER CL2 3N3 10%	1
C640	J707412P9	CAP PYES 100N 10%	1
C641	J707412P13	CAP PYES 470N 10%	1
C642	J707412P13	CAP PYES 470N 10%	1
C643	J707438P22	CAP CER CL2 47N 10%	1
C644	J707436P6	CAP CER NP0 2P7 .25P	1
C652	J707438P5	CAP CER CL2 1N 10%	1
C653	J707444P6	CAP TA SOL 4U7 35V	1
C656	J707436P77	CAP CER NP0 470P 5%	1
C657	J707438P3	CAP CER CL2 470P 10%	1
C659	J707438P5	CAP CER CL2 1N 10%	1
C660	J707438P12	CAP CER CL2 6N8 5%	1
C665	J707438P3	CAP CER CL2 470P 10%	1
C666	J707438P3	CAP CER CL2 470P 10%	1
C667	J707438P3	CAP CER CL2 470P 10%	1
C668	J707436P61	CAP CER NP0 100P 5%	1
C701	J707436P29	CAP CER NP0 22P 5%	1
C702	J708702P22	CAP CER N750 56P 5%	1
C703	J707436P69	CAP CER NP0 220P 5%	1
C704	J707436P13	CAP CER NP0 10P 5%	1
C705	J707438P5	CAP CER CL2 1N 10%	1
C706	J707438P14	CAP CER CL2 10N 10%	1
C707	J707436P10	CAP CER NP0 5P6 .25P	1
C708	J707438P14	CAP CER CL2 10N 10%	1
C709	J707438P14	CAP CER CL2 10N 10%	1
D100	A700047P3	DIO SI SIG 1N6263	1

Pos	Code No.	Description	Qt
D101	J706892P1	DIO SI PIN UM 9401	1
D102	J706892P1	DIO SI PIN UM 9401	1
D103	J707390P1	DIO SI SIG BAV 74	1
D300	J709100P2	DIO SI CAP BB 909B	1
D301	J709100P2	DIO SI CAP BB 909B	1
D302	J709100P2	DIO SI CAP BB 909B	1
D303	J709100P2	DIO SI CAP BB 909B	1
D304	J709100P2	DIO SI CAP BB 909B	1
D305	J709100P2	DIO SI CAP BB 909B	1
D306	J706007P1	DIO SI CAP BB 505B	1
D307	J706007P1	DIO SI CAP BB 505B	1
D401	A700025P8	DIO SI ZENR 6V8 5% 0.4W	1
D501	J706007P1	DIO SI CAP BB 505B	1
D502	J706007P1	DIO SI CAP BB 505B	1
D503	J706007P1	DIO SI CAP BB 505B	1
D504	J706007P1	DIO SI CAP BB 505B	1
D505	J707769P2	DIO SI CAP BBY 31	1
D601	J706007P1	DIO SI CAP BB 505B	1
D602	J706007P1	DIO SI CAP BB 505B	1
D603	J706007P1	DIO SI CAP BB 505B	1
D604	J706007P1	DIO SI CAP BB 505B	1
D605	J707389P1	DIO SI SIG BAV 99	1
D606	J708681P1	DIO SI SIG BAW 56	1
D607	J707390P1	DIO SI SIG BAV 74	1
D608	J707390P1	DIO SI SIG BAV 74	1
D610	J708681P1	DIO SI SIG BAW 56	1
D701	J707928P2	DIO SI CAP BB 809	1
D702	J707390P1	DIO SI SIG BAV 74	1
L100	A700024P1	COIL RF FIX 0.1UH 10%	1
L101	A700024P1	COIL RF FIX 0.1UH 10%	1
L102	K805653G4	COIL ASM 4 1/2T	1
L103	J707339G1	COIL FIX ASM	1
L104	A700024P1	COIL RF FIX 0.1UH 10%	1
L105	K805653G2	COIL ASM 2 1/2T	1
L106	J707256P1	COIL FIX	1
L107	J707339G1	COIL FIX ASM	1
L108	K805653G4	COIL ASM 4 1/2T G1	1
L108	K805653G2	COIL ASM 2 1/2T G2	1
L109	J707339G1	COIL FIX ASM	1
L110	J707256P3	COIL FIX	1
L112	J707339G1	COIL FIX ASM	1
L113	A700024P1	COIL RF FIX 0.1UH 10% G1	1
L113	A700024P13	COIL RF FIX 1.0UH 10% G2	1
L114	K805653G2	COIL ASM 2 1/2T G1	1
L114	K805653G4	COIL ASM 4 1/2T G2	1
L115	J709287P1	CORE TOR FERR	1
L116	J709287P1	CORE TOR FERR	1
L117	J709603P1	COIL	1
L118	J707339G1	COIL FIX ASM	1
L119	J709603P1	COIL	1
L120	J709603P1	COIL	1
L121	A700024P10	COIL RF FIX 0.56UH 10%	1
L122	A700024P25	COIL RF FIX 10UH 10%	1
L123	A700024P25	COIL RF FIX 10UH 10%	1
L124	K805653G5	COIL ASM 5 1/2T	1
L125	K805653G6	COIL ASM 6 1/2T	1
L126	K805653G3	COIL ASM 3 1/2T G1	1
L126	K805653G4	COIL ASM 4 1/2T G2	1
L127	A700024P25	COIL RF FIX 10UH 10%	1

Pos	Code No.	Description	Qt
L128	A700024P25	COIL RF FIX 10UH 10%	1
L129	A700024P10	COIL RF FIX 0.56UH 10%	1
L130	J707256P1	COIL FIX	1
L301	J709099P3	COIL RF VAR 3-1/2T TAP	1
L302	J709099P3	COIL RF VAR 3-1/2T TAP	1
L303	J707486P17	COIL RF FIX 0.39UH 10%	1
L304	J709099P4	COIL RF VAR 3-1/2T TAP	1
L305	J707486P2	COIL RF FIX 3.3UH 10%	1
L306	J709099P5	COIL RF VAR 3-1/2T TAP	1
L308	J709099P3	COIL RF VAR 3-1/2T TAP	1
L310	J709099P4	COIL RF VAR 3-1/2T TAP	1
L312	J708428P2	COIL RF VAR 45 MHZ	1
L313	J709099P4	COIL RF VAR 3-1/2T TAP	1
L314	J709099P3	COIL RF VAR 3-1/2T TAP	1
L401	J707486P10	COIL RF FIX 1.5UH 10%	1
L403	K805570G2	COIL ASM	1
L404	K805570G1	COIL ASM	1
L405	J708428P1	COIL RF VAR 45 MHZ	1
L406	K805570G3	COIL ASM	1
L407	A700024P25	COIL RF FIX 10UH 10%	1
L408	J708428P2	COIL RF VAR 45 MHZ	1
L409	J707431P1	COIL RF VAR 455KHZ 25%	1
L410	J707431P1	COIL RF VAR 455KHZ 25%	1
L501	A700024P13	COIL RF FIX 1.0UH 10%	1
L502	A700024P13	COIL RF FIX 1.0UH 10%	1
L503	A700024P13	COIL RF FIX 1.0UH 10%	1
L504	A700024P13	COIL RF FIX 1.0UH 10%	1
L505	L855671P1	COIL RADIO FREQUENCY	1
L506	A700024P13	COIL RF FIX 1.0UH 10%	1
L507	A700024P13	COIL RF FIX 1.0UH 10%	1
L508	A700024P1	COIL RF FIX 0.1UH 10%	1
L601	A700024P13	COIL RF FIX 1.0UH 10%	1
L602	A700024P13	COIL RF FIX 1.0UH 10%	1
L603	A700024P13	COIL RF FIX 1.0UH 10%	1
L604	A700024P13	COIL RF FIX 1.0UH 10%	1
L605	L855671P1	COIL RADIO FREQUENCY	1
L606	A700024P13	COIL RF FIX 1.0UH 10%	1
L607	A700024P13	COIL RF FIX 1.0UH 10%	1
L608	A700024P2	COIL RF FIX 0.12UH 10%	1
L609	K805653G10	COIL RF FIXED 10 1/2T G1	1
L609	K805653G6	COIL RF FIXED 6 1/2T G2	1
L701	K805570G4	COIL ASM	1
L702	A700024P43	COIL RF FIX 330UH 10%	1
L703	A700024P27	COIL RF FIX 15UH 10%	1
P102	J707064P112	CONN PWB FEM 12-CKT	1
P105	A701883P4	CONN PWB FEM RECP	1
Q100	J707388P1	TSTR NPN SI BFR 53	1
Q101	J707388P1	TSTR NPN SI BFR 53	1
Q102	A701940P1	TSTR NPN SI RF-PWR 0.4W	1
Q103	A700066P2	TSTR NPN SI RF-PWR 2.0W	1
Q104	J709163P1	TSTR NPN SI RF-PWR 10W	1
Q105	J709162P2	TSTR NPN SI RF-PWR 27W	1
Q106	J707432P1	TSTR PNP SI BCX 18	1
Q107	J707386P1	TSTR NPN SI BCW 32	1
Q108	J708406P1	TSTR NPN SI BD 233	1
Q109	J707386P1	TSTR NPN SI BCW 32	1
Q201	J707435P1	TSTR PNP SI BC 369	1
Q202	J707386P1	TSTR NPN SI BCW 32	1
Q203	J707432P1	TSTR PNP SI BCX 18	1

Pos	Code No.	Description	Qt
Q204	J707386P1	TSTR NPN SI BCW 32	1
Q301	J706011P2	TSTR NPN SI BFR 91A	1
Q302	J708315P1	TSTR JFET SI 2N5245	1
Q401	J707817P1	TSTR JFET SI J 309	1
Q402	J707817P1	TSTR JFET SI J 309	1
Q403	J707419P1	TSTR JFET SI BF511	1
Q404	J708418P1	TSTR NPN SI BFS 20	1
Q405	J708418P1	TSTR NPN SI BFS 20	1
Q406	J708418P1	TSTR NPN SI BFS 20	1
Q407	J707386P1	TSTR NPN SI BCW 32	1
Q408	J707387P1	TSTR PNP SI BCW 30	1
Q501	J707817P1	TSTR JFET SI J 309	1
Q502	J707388P1	TSTR NPN SI BFR 53	1
Q601	J707817P1	TSTR JFET SI J 309	1
Q602	J707388P1	TSTR NPN SI BFR 53	1
Q603	J708318P1	TSTR PNP SI BFT 92	1
Q604	J707433P1	TSTR MFET SI BF 989	1
Q605	J707386P1	TSTR NPN SI BCW 32	1
Q612	J707386P1	TSTR NPN SI BCW 32	1
Q613	J707386P1	TSTR NPN SI BCW 32	1
Q701	J707419P1	TSTR JFET SI BF511	1
Q702	J707387P1	TSTR PNP SI BCW 30	1
R100	J707385P122	RES MFLM 1/8W 1K2 5%	1
R101	J707385P472	RES MFLM 1/8W 4K7 5%	1
R102	J707385P270	RES MFLM 1/8W 27R 5%	1
R103	J707385P470	RES MFLM 1/8W 47R 5%	1
R104	J707385P102	RES MFLM 1/8W 1K0 5%	1
R105	J707385P182	RES MFLM 1/8W 1K8 5%	1
R106	J707385P470	RES MFLM 1/8W 47R 5%	1
R107	J707385P680	RES MFLM 1/8W 68R 5%	1
R108	J707385P560	RES MFLM 1/8W 56R 5%	1
R109	J707385P100	RES MFLM 1/8W 10R 5%	1
R110	J707385P100	RES MFLM 1/8W 10R 5%	1
R111	J707385P100	RES MFLM 1/8W 10R 5%	1
R112	J707385P100	RES MFLM 1/8W 10R 5%	1
R113	J707385P100	RES MFLM 1/8W 10R 5%	1
R114	J707385P947	RES MFLM 1/8W 4R7 20%	1
R115	J707385P100	RES MFLM 1/8W 10R 5%	1
R116	J707385P220	RES MFLM 1/8W 22R 5%	1
R117	J707385P220	RES MFLM 1/8W 22R 5%	1
R118	J707385P473	RES MFLM 1/8W 47K 5%	1
R119	J707385P820	RES MFLM 1/8W 82R 5%	1
R120	J707385P820	RES MFLM 1/8W 82R 5%	1
R121	J707385P333	RES MFLM 1/8W 33K 5%	1
R122	J707385P221	RES MFLM 1/8W 220R 5%	1
R123	J707385P221	RES MFLM 1/8W 220R 5%	1
R132	J708538P9	RES VAR CERM 200K 20%	1
R133	J708538P4	RES VAR CERM 5K0 20%	1
R134	J707385P100	RES MFLM 1/8W 10R 5%	1
R135	J706147P2	RES THERM PTC 80R 25%	1
R136	J707385P682	RES MFLM 1/8W 6K8 5%	1
R137	J707385P223	RES MFLM 1/8W 22K 5%	1
R138	J707385P472	RES MFLM 1/8W 4K7 5%	1
R139	J707385P472	RES MFLM 1/8W 4K7 5%	1
R140	J707385P333	RES MFLM 1/8W 33K 5%	1
R141	J707385P333	RES MFLM 1/8W 33K 5%	1
R142	J707385P104	RES MFLM 1/8W 100K 5%	1
R143	J707385P222	RES MFLM 1/8W 2K2 5%	1
R144	J707385P222	RES MFLM 1/8W 2K2 5%	1

Pos	Code No.	Description	Qt
R145	J707385P223	RES MFLM 1/8W 22K 5%	1
R146	J707385P104	RES MFLM 1/8W 100K 5%	1
R147	J707385P104	RES MFLM 1/8W 100K 5%	1
R148	J707385P123	RES MFLM 1/8W 12K 5%	1
R149	J707385P472	RES MFLM 1/8W 4K7 5%	1
R150	J707385P391	RES MFLM 1/8W 390R 5%	1
R151	J707385P683	RES MFLM 1/8W 68K 5%	1
R152	J707385P104	RES MFLM 1/8W 100K 5%	1
R153	J707385P472	RES MFLM 1/8W 4K7 5%	1
R154	J707385P274	RES MFLM 1/8W 270K 5%	1
R155	J707385P682	RES MFLM 1/8W 6K8 5%	1
R156	J707385P102	RES MFLM 1/8W 1K0 5%	1
R157	J707385P392	RES MFLM 1/8W 3K9 5%	1
R158	J707385P472	RES MFLM 1/8W 4K7 5%	1
R159	J707385P104	RES MFLM 1/8W 100K 5%	1
R160	J709725P1	RES THERM PTC 1K0	1
R161	J707385P271	RES MFLM 1/8W 270R 5%	1
R162	J707385P271	RES MFLM 1/8W 270R 5%	1
R163	J707385P471	RES MFLM 1/8W 470R 5%	1
R164	J707385P221	RES MFLM 1/8W 220R 5%	1
R165	J707385P221	RES MFLM 1/8W 220R 5%	1
R201	J707385P561	RES MFLM 1/8W 560R 5%	1
R202	J707385P271	RES MFLM 1/8W 270R 5%	1
R203	J707385P153	RES MFLM 1/8W 15K 5%	1
R204	J707385P153	RES MFLM 1/8W 15K 5%	1
R205	J707385P472	RES MFLM 1/8W 4K7 5%	1
R206	J707385P272	RES MFLM 1/8W 2K7 5%	1
R207	J707385P563	RES MFLM 1/8W 56K 5%	1
R208	J707385P563	RES MFLM 1/8W 56K 5%	1
R209	J707385P271	RES MFLM 1/8W 270R 5%	1
R301	J707385P102	RES MFLM 1/8W 1K0 5% G1	1
R301	J707385P182	RES MFLM 1/8W 1K8 5% G2	1
R302	J707385P561	RES MFLM 1/8W 560R 5%	1
R303	J707385P104	RES MFLM 1/8W 100K 5%	1
R304	J707385P104	RES MFLM 1/8W 100K 5%	1
R305	J707385P900	RES MFLM 1/8W 0R JUMPER	1
R306	J707385P222	RES MFLM 1/8W 2K2 5%	1
R307	J707385P681	RES MFLM 1/8W 680R 5%	1
R308	J707385P470	RES MFLM 1/8W 47R 5%	1
R309	J707385P270	RES MFLM 1/8W 27R 5%	1
R310	J707385P104	RES MFLM 1/8W 100K 5%	1
R311	J707385P560	RES MFLM 1/8W 56R 5%	1
R312	J707385P104	RES MFLM 1/8W 100K 5%	1
R314	J707385P104	RES MFLM 1/8W 100K 5%	1
R316	J707385P104	RES MFLM 1/8W 100K 5%	1
R317	J707385P182	RES MFLM 1/8W 1K8 5%	1
R318	J707385P100	RES MFLM 1/8W 10R 5%	1
R319	J707385P101	RES MFLM 1/8W 100R 5%	1
R321	J707385P270	RES MFLM 1/8W 27R 5%	1
R322	J707385P391	RES MFLM 1/8W 390R 5% G1	1
R322	J707385P471	RES MFLM 1/8W 470R 5% G2	1
R323	J707385P104	RES MFLM 1/8W 100K 5%	1
R324	J707385P104	RES MFLM 1/8W 100K 5%	1
R325	J707385P100	RES MFLM 1/8W 10R 5%	1
R326	J707385P392	RES MFLM 1/8W 3K9 5%	1
R327	J707385P102	RES MFLM 1/8W 1K0 5%	1
R401	J707385P560	RES MFLM 1/8W 56R 5%	1
R402	J707385P100	RES MFLM 1/8W 10R 5%	1
R403	J707385P332	RES MFLM 1/8W 3K3 5%	1

Pos	Code No.	Description	Qt
R405	J707385P100	RES MFLM 1/8W 10R 5%	1
R406	J707385P820	RES MFLM 1/8W 82R 5%	1
R407	J707385P470	RES MFLM 1/8W 47R 5%	1
R408	J707385P470	RES MFLM 1/8W 47R 5%	1
R410	J707385P272	RES MFLM 1/8W 2K7 5%	1
R411	J707385P682	RES MFLM 1/8W 6K8 5%	1
R412	J707385P272	RES MFLM 1/8W 2K7 5%	1
R413	J707385P821	RES MFLM 1/8W 820R 5%	1
R414	J707385P220	RES MFLM 1/8W 22R 5%	1
R415	J707385P222	RES MFLM 1/8W 2K2 5%	1
R416	J707385P562	RES MFLM 1/8W 5K6 5%	1
R417	J707385P103	RES MFLM 1/8W 10K 5%	1
R418	J707385P153	RES MFLM 1/8W 15K 5%	1
R419	J707385P182	RES MFLM 1/8W 1K8 5%	1
R420	J707385P182	RES MFLM 1/8W 1K8 5%	1
R421	J707385P182	RES MFLM 1/8W 1K8 5%	1
R422	J707385P473	RES MFLM 1/8W 47K 5%	1
R423	J707385P153	RES MFLM 1/8W 15K 5%	1
R424	J708538P5	RES VAR CERM 10K 20%	1
R425	J707385P272	RES MFLM 1/8W 2K7 5%	1
R426	J707385P473	RES MFLM 1/8W 47K 5%	1
R427	J707385P473	RES MFLM 1/8W 47K 5%	1
R428	J707385P563	RES MFLM 1/8W 56K 5%	1
R429	J707385P104	RES MFLM 1/8W 100K 5%	1
R430	J707385P334	RES MFLM 1/8W 330K 5%	1
R431	J707385P473	RES MFLM 1/8W 47K 5%	1
R432	J707385P473	RES MFLM 1/8W 47K 5%	1
R433	J707385P271	RES MFLM 1/8W 270R 5%	1
R434	J707385P102	RES MFLM 1/8W 1K0 5%	1
R435	J706147P3	RES THERM PTC 250R 25%	1
R436	J707385P392	RES MFLM 1/8W 3K9 5%	1
R437	J707406P7	RES THERM NTC 220R 10%	1
R438	J707385P222	RES MFLM 1/8W 2K2 5%	1
R439	J707385P392	RES MFLM 1/8W 3K9 5%	1
R440	J707385P392	RES MFLM 1/8W 3K9 5%	1
R441	J707385P101	RES MFLM 1/8W 100R 5%	1
R442	J708538P6	RES VAR CERM 20K 20%	1
R444	J707385P473	RES MFLM 1/8W 47K 5%	1
R445	J707385P273	RES MFLM 1/8W 27K 5%	1
R446	J707385P224	RES MFLM 1/8W 220K 5%	1
R447	J707385P392	RES MFLM 1/8W 3K9 5%	1
R448	J707385P101	RES MFLM 1/8W 100R 5%	1
R449	J707385P470	RES MFLM 1/8W 47R 5%	1
R450	J707385P103	RES MFLM 1/8W 10K 5%	1
R451	J707385P332	RES MFLM 1/8W 3K3 5%	1
R452	J707385P332	RES MFLM 1/8W 3K3 5%	1
R501	J707385P122	RES MFLM 1/8W 1K2 5%	1
R502	J707385P122	RES MFLM 1/8W 1K2 5%	1
R503	J707385P122	RES MFLM 1/8W 1K2 5%	1
R504	J707385P104	RES MFLM 1/8W 100K 5%	1
R505	J707385P104	RES MFLM 1/8W 100K 5%	1
R506	J707385P104	RES MFLM 1/8W 100K 5%	1
R508	J707385P103	RES MFLM 1/8W 10K 5%	1
R509	J707385P910	RES MFLM 1/8W 1R0 20%	1
R510	J707385P332	RES MFLM 1/8W 3K3 5%	1
R512	J707385P561	RES MFLM 1/8W 560R 5%	1
R513	J707385P183	RES MFLM 1/8W 18K 5%	1
R514	J707385P472	RES MFLM 1/8W 4K7 5%	1
R515	J707385P470	RES MFLM 1/8W 47R 5%	1

Pos	Code No.	Description	Qt
R517	J707385P101	RES MFLM 1/8W 100R 5%	1
R518	J707385P470	RES MFLM 1/8W 47R 5%	1
R519	J707385P470	RES MFLM 1/8W 47R 5%	1
R529	J707385P392	RES MFLM 1/8W 3K9 5%	1
R601	J707385P122	RES MFLM 1/8W 1K2 5%	1
R602	J707385P122	RES MFLM 1/8W 1K2 5%	1
R603	J707385P122	RES MFLM 1/8W 1K2 5%	1
R604	J707385P104	RES MFLM 1/8W 100K 5%	1
R605	J707385P104	RES MFLM 1/8W 100K 5%	1
R606	J707385P104	RES MFLM 1/8W 100K 5%	1
R607	J707385P561	RES MFLM 1/8W 560R 5%	1
R608	J707385P221	RES MFLM 1/8W 220R 5%	1
R609	J707385P472	RES MFLM 1/8W 4K7 5%	1
R610	J707385P183	RES MFLM 1/8W 18K 5%	1
R611	J707385P271	RES MFLM 1/8W 270R 5%	1
R612	J707385P102	RES MFLM 1/8W 1K0 5%	1
R613	J707385P101	RES MFLM 1/8W 100R 5%	1
R614	J707385P561	RES MFLM 1/8W 560R 5%	1
R615	J707385P272	RES MFLM 1/8W 2K7 5%	1
R616	J707385P470	RES MFLM 1/8W 47R 5%	1
R617	J707385P683	RES MFLM 1/8W 68K 5%	1
R618	J707385P683	RES MFLM 1/8W 68K 5%	1
R619	J707385P104	RES MFLM 1/8W 100K 5%	1
R620	J707385P271	RES MFLM 1/8W 270R 5% G1 *	1
R620	J707385P681	RES MFLM 1/8W 680R 5% G2 *	1
R621	J707385P561	RES MFLM 1/8W 560R 5% G1 *	1
R621	J707385P331	RES MFLM 1/8W 330R 5% G2 *	1
R622	J707385P102	RES MFLM 1/8W 1K0 5%	1
R623	J707385P224	RES MFLM 1/8W 220K 5%	1
R624	J707385P223	RES MFLM 1/8W 22K 5%	1
R625	J707385P470	RES MFLM 1/8W 47R 5%	1
R626	J707385P100	RES MFLM 1/8W 10R 5%	1
R627	J707385P103	RES MFLM 1/8W 10K 5%	1
R628	J707385P224	RES MFLM 1/8W 220K 5%	1
R629	J707385P393	RES MFLM 1/8W 39K 5%	1
R630	J707385P100	RES MFLM 1/8W 10R 5%	1
R631	J707385P824	RES MFLM 1/8W 820K 5%	1
R632	J707385P223	RES MFLM 1/8W 22K 5%	1
R633	J707385P824	RES MFLM 1/8W 820K 5%	1
R634	J707385P123	RES MFLM 1/8W 12K 5%	1
R635	J707385P102	RES MFLM 1/8W 1K0 5%	1
R636	J707385P332	RES MFLM 1/8W 3K3 5%	1
R637	J707385P181	RES MFLM 1/8W 180R 5%	1
R638	J707385P154	RES MFLM 1/8W 150K 5%	1
R639	J707385P682	RES MFLM 1/8W 6K8 5%	1
R640	J707385P105	RES MFLM 1/8W 1M0 10%	1
R641	J707385P184	RES MFLM 1/8W 180K 5%	1
R642	J707385P184	RES MFLM 1/8W 180K 5%	1
R643	J707385P105	RES MFLM 1/8W 1M0 10%	1
R644	J707385P473	RES MFLM 1/8W 47K 5% G1	1
R644	J707385P563	RES MFLM 1/8W 56K 5% G2	1
R645	J707385P103	RES MFLM 1/8W 10K 5%	1
R646	J707385P562	RES MFLM 1/8W 5K6 5% G1	1
R646	J707385P472	RES MFLM 1/8W 4K7 5% G2	1
R647	J707385P333	RES MFLM 1/8W 33K 5%	1
R648	J707385P823	RES MFLM 1/8W 82K 5% G1	1
R648	J707385P683	RES MFLM 1/8W 68K 5% G2	1
R649	J707385P393	RES MFLM 1/8W 39K 5% G1	1
R649	J707385P563	RES MFLM 1/8W 56K 5% G2	1

Pos	Code No.	Description	Qt
R650	J707385P333	RES MFLM 1/8W 33K 5% G1	1
R650	J707385P273	RES MFLM 1/8W 27K 5% G2	1
R651	J707385P273	RES MFLM 1/8W 27K 5% G1	1
R651	J707385P183	RES MFLM 1/8W 18K 5% G2	1
R652	J707385P103	RES MFLM 1/8W 10K 5%	1
R653	J707385P333	RES MFLM 1/8W 33K 5%	1
R654	J707385P562	RES MFLM 1/8W 5K6 5%	1
R655	J707385P183	RES MFLM 1/8W 18K 5%	1
R656	J707385P393	RES MFLM 1/8W 39K 5%	1
R657	J707385P823	RES MFLM 1/8W 82K 5%	1
R658	J707385P154	RES MFLM 1/8W 150K 5%	1
R659	J707385P223	RES MFLM 1/8W 22K 5% G1	1
R659	J707385P153	RES MFLM 1/8W 15K 5% G2	1
R660	J707385P333	RES MFLM 1/8W 33K 5% G1	1
R660	J707385P273	RES MFLM 1/8W 27K 5% G2	1
R661	J707385P333	RES MFLM 1/8W 33K 5% G1	1
R661	J707385P273	RES MFLM 1/8W 27K 5% G2	1
R662	J707385P473	RES MFLM 1/8W 47K 5%	1
R663	J708538P6	RES VAR CERM 20K 20%	1
R664	J707385P683	RES MFLM 1/8W 68K 5% G1	1
R664	J707385P393	RES MFLM 1/8W 39K 5% G2	1
R665	J707385P824	RES MFLM 1/8W 820K 5%	1
R666	J707385P124	RES MFLM 1/8W 120K 5%	1
R667	J707385P124	RES MFLM 1/8W 120K 5%	1
R668	J707385P122	RES MFLM 1/8W 1K2 5%	1
R669	J707385P221	RES MFLM 1/8W 220R 5%	1
R670	J707385P103	RES MFLM 1/8W 10K 5%	1
R671	J707385P562	RES MFLM 1/8W 5K6 5%	1
R672	J707385P822	RES MFLM 1/8W 8K2 5%	1
R673	J707385P822	RES MFLM 1/8W 8K2 5%	1
R674	J707385P101	RES MFLM 1/8W 100R 5%	1
R675	J708538P5	RES VAR CERM 10K 20%	1
R676	J707385P123	RES MFLM 1/8W 12K 5%	1
R677	J708538P5	RES VAR CERM 10K 20%	1
R678	J707385P470	RES MFLM 1/8W 47R 5%	1
R679	J707385P821	RES MFLM 1/8W 820R 5%	1
R680	J708538P5	RES VAR CERM 10K 20%	1
R681	J707385P223	RES MFLM 1/8W 22K 5%	1
R682	J707385P152	RES MFLM 1/8W 1K5 5%	1
R683	J707385P223	RES MFLM 1/8W 22K 5%	1
R684	J707385P183	RES MFLM 1/8W 18K 5%	1
R685	J707385P183	RES MFLM 1/8W 18K 5%	1
R686	J707385P103	RES MFLM 1/8W 10K 5%	1
R687	J707385P103	RES MFLM 1/8W 10K 5%	1
R689	J707385P105	RES MFLM 1/8W 1M0 10%	1
R690	J707385P124	RES MFLM 1/8W 120K 5%	1
R691	J707385P273	RES MFLM 1/8W 27K 5%	1
R692	J707385P223	RES MFLM 1/8W 22K 5%	1
R693	J707385P105	RES MFLM 1/8W 1M0 10%	1
R694	J707385P223	RES MFLM 1/8W 22K 5%	1
R695	J707385P105	RES MFLM 1/8W 1M0 10%	1
R696	J707385P223	RES MFLM 1/8W 22K 5%	1
R697	J707385P105	RES MFLM 1/8W 1M0 10%	1
R698	J707385P103	RES MFLM 1/8W 10K 5%	1
R701	J708666P1	RES THERM NTC 5K 2%	1
R702	A701250P413	RES MFLM 1/4W 133K 1%	1
R703	A701250P213	RES MFLM 1/4W 1K33 1%	1
R704	A701250P325	RES MFLM 1/4W 17K8 1%	1
R705	J708666P2	RES THERM NTC 20K 2%	1

Pos	Code No.	Description	Qt
R706	J708666P2	RES THERM NTC 20K 2%	1
R707	J707385P104	RES MFLM 1/8W 100K 5%	1
R708	J707385P105	RES MFLM 1/8W 1MO 10%	1
R709	J707385P181	RES MFLM 1/8W 180R 5%	1
R710	J707385P101	RES MFLM 1/8W 100R 5%	1
R711	J707385P223	RES MFLM 1/8W 22K 5%	1
R712	J707385P154	RES MFLM 1/8W 150K 5%	1
R713	J707385P821	RES MFLM 1/8W 820R 5%	1
R714	J707385P104	RES MFLM 1/8W 100K 5%	1
U100	J708165P2	IC LIN OP-AMP 324	1
U201	J708333P1	IC LIN VR FIX 4785	1
U401	J707449P1	IC LIN IF-AMP 3357	1
U402	M905766G2	INT CKT SQ 4003	1
U601	J707859P1	IC LIN OP-AMP 204	1
U602	J707859P1	IC LIN OP-AMP 204	1
U603	J707859P1	IC LIN OP-AMP 204	1
U604	J707859P1	IC LIN OP-AMP 204	1
U606	J707243P1	IC DIG REG 4094	1
U607	J707374P4	IC PLL PRESC 12018	1
U608	B800902P1	IC PLL SYN CUSTOM DES	1
U609	J707859P1	IC LIN OP-AMP 204	1
U610	J708503P2	IC LIN CMPAR LM 339	1
U615	J708621P2	CPLR OPTO PC 827	1
U616	J708503P2	IC LIN CMPAR LM 339	1
W001	A700184P1	RES WIRE JMPR OR JUMPER	1
W003	J707256P1	COIL FIX	1
W004	J707256P1	COIL FIX	1
W005	J708717P1	STRAP	1
W006	J708716P2	STRAP	1
W007	J708716P2	STRAP	1
W008	J708716P2	STRAP	1
W009	J708716P2	STRAP	1
Y401	J708426P2	CRYSTAL UNIT 45.4550MHZ	1
Y701	J707567P19	CRYSTAL UNIT 7.4000MHZ	1
Z401	J708330P3	FLTR CRY 45.0 +/-3.75KHZ	1
Z402	J707446P4	FLTR CER 455K +/- 4.5KHZ	1
Z403	J707446P4	FLTR CER 455K +/- 4.5KHZ	1
	M905903P1R2	BOARD PW	1
		NON REFERENCED ITEMS:	
	J708966G1	HEAT SINK MODF	1
	K805569G2	SHIELD METALLIZED	1
	J706281P6	CORE SCREW FERR U 10	8
	J708561P3	COIL FIXED	1
	J708561P3	COIL FIXED	1
	J708561P3	COIL FIXED	1
	J706804P3	WASH INS CRYS FOR HC-45/U	2
	J706804P2	WASH INS CRYS FOR HC-18/U	2

Pos	Code No.	Description	Qt

RA6004/RA6005 *

RSSI DETECTOR MODULES

(PART OF RSSI OPTION WITH IU6001)

An RSSI is a unit which in some way monitors the strength of the electromagnetic field in which the antenna of a receiver is located.

A way to perform this task is to measure the amplitude of the IF-signal in the receiver. This is done by the detector module RA6004. The output of this module is a DC-voltage which has a level corresponding to the strength of the field at the antenna. To make the information compatible to a micro-processor system, the voltage is lead to an interface module (IU6001) which transforms it to an 8 bit digital code.

IU6001 contains an ADC that can be read whenever information about the field strength is needed.

CIRCUIT DESCRIPTION

The RA6004 detector module is mounted on epoxy printed circuit board.

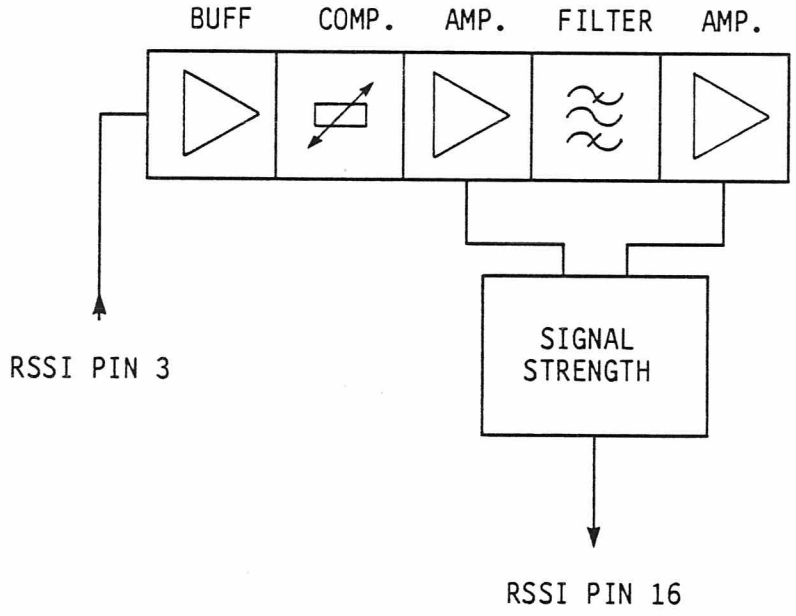

ALIGNMENT OF RSSI RA6004

The module buffers, amplifies and detects the amplitude of the 455 kHz IF-signal. The module also includes a compensation network which, to some degree, cancels the gain variation of the RX RF-path, caused by temperature changes. The amplification and detection is provided by an integrated circuit, U100.

This device is a complete FM IF-string but only the signal strength indicator is used. The output of the RA6004 is a voltage between 0 and 5 volts which is logarithmically related to the detector input, the IF-signal.

* RA6005 is no longer produced.

The IF-signal is fed to a source follower to prevent loading of the connection point. The source resistor is composed of four resistance including an NTC-resistor and a trimming resistance. Its purpose is partly to obtain temperature dependent attenuation and partly to obtain attenuation in general. The general attenuation is necessary as the IC is linear in the range from 10 uV to 10 mV and the IF-signal delivered by the radio typically ranges from 2 mV to 2 V. The trimmer is required since all radios do not have the same front gain.

From the source follower the signal is lead to the input of the IC which is coupled as an IF-amplifier. Pin 5 of the IC provides a current (0.5 - 10 uA) that relates logarithmically to the input, pin 16. After transformation of the current to a voltage of 0.05 - 3.0 V the final output is given at pin 16 of the RSSI module.

SPECIFICATION

Power supply
8.5 V ± 0.25 V

Current comsumption
Typical: 3 mA
Maximum: 10 mA

Input IF-signal 455 kHz
4 Vpp maximum

Input impedance
1 Mohm/5 pF

Output voltage
2.4 V typical at +25°C

Output impedance
100 Kohm/0.1 uF

Bandwidth
±10 kHz

Mechanical
46.0 x 12.8 mm

Temperature range
-25°C to +75°C

MOUNTING PROCEDURE

Mount RA6004 as U403 on the pertinent RF6xxx-board

On the same board; mount a potentiometer of 100 ohm lin as R443.

PARTS LIST FOR RSSI DETECTOR MODULES RA600X : L856009G1 BD REV. 2

Pos	Code No.	Description	Qt
C100	J707436P73	CAP CER NP0 330P 5%	1
C101	J707438P14	CAP CER CL2 10N 10%	1
C102	J707438P26	CAP CER CL2 100N 10%	1
C103	J707438P26	CAP CER CL2 100N 10%	1
C104	J707438P26	CAP CER CL2 100N 10%	1
C105	J707438P26	CAP CER CL2 100N 10%	1
C106	J707438P16	CAP CER CL2 15N 10%	1
C107	J709426P7	CAP TA SOL 1U0 10V	1
C108	J707438P26	CAP CER CL2 100N 10%	1
C109	J707438P26	CAP CER CL2 100N 10%	1
Q100	J707419P1	TSTR JFET SI BF511	1
R100	J707385P105	RES MFLM 1/8W 1M0 10%	1
R101	J707406P4	RES THERM NTC 2K2 10%	1
R102	J707385P272	RES MFLM 1/8W 2K7 5%	1
R103	J707385P821	RES MFLM 1/8W 820R 5%	1
R105	J707385P471	RES MFLM 1/8W 470R 5%	1
R106	J707385P102	RES MFLM 1/8W 1K0 5%	1
R107	J707385P104	RES MFLM 1/8W 100K 5%	1
U100	J709576P2	IC LIN IF-AMP 604	1
Z100	J707446P1	FLTR CER 455K +/-10KHZ	1
	L856010P1R2	BD PW	1
		NON REFERENCED ITEMS:	
	J707469P3	LEAD FRAME A=9.5 B=0.8	7
	J709494P1	SPACER	2

Pos	Code No.	Description	Qt

DATE: 9/29/1987

Pos	Code No	Description	Qt
C100	J707436P73	CAP CER NPO 330P 5%	1
C101	J707438P14	CAP CER CL2 10N 10%	1
C102	J707438P26	CAP CER CL2 100N 10%	1
C103	J707438P26	CAP CER CL2 100N 10%	1
C104	J707438P26	CAP CER CL2 100N 10%	1
C105	J707438P26	CAP CER CL2 100N 10%	1
C106	J707438P16	CAP CER CL2 15N 10%	1
C107	J709426P7	CAP TA SOL 1U0 10V	1
C108	J707438P26	CAP CER CL2 100N 10%	1
C109	J707438P26	CAP CER CL2 100N 10%	1
Q100	J707419P1	TSTR JFET SI BF511	1
R100	J707385P105	RES MFLM 1/8W 1M0 10%	1
R101	J707406P4	RES THERM NTC 2K2 10%	1
R102	J707385P272	RES MFLM 1/8W 2K7 5%	1
R103	J707385P821	RES MFLM 1/8W 820R 5%	1
R105	J707385P471	RES MFLM 1/8W 470R 5%	1
R106	J707385P102	RES MFLM 1/8W 1K0 5%	1
R107	J707385P104	RES MFLM 1/8W 100K 5%	1
U100	J709576P2	IC LIN IF-AMP 604	1
Z100	J707446P1	FLTR CER 455K +/-10KHZ	1
	L856010P1R1	BD PW	1
		NON ELECTRONICAL PART	
	J707469P3	LEAD FRAME A=9.5 B=0.8	7
	J709494P1	SPACER	2

Pos	Code No	Description	Qt

ITEM NUMBER	DESCRIPTION
M905902G1	RF 6774S25L, 200 MHZ LOW BAND SIDE, 25W
M905902G2	RF 6774S25H, 200 MHZ HIGH BAND SIDE, 25W

P A R T S L I S T :

CIRCUIT POSITION	COMPONENT ITEM NUMBER	COMPONENT DESCRIPTION	QUANTITY	
C100	J707809P13	CAP CER NPO 10P 5% 50V	1	ALL
C101	J707436P77	CAP CER NPO 470P 5% 50V	1	ALL
C102	J707809P8	CAP CER 3P9 0,25P 50V	1	ALL
C103	J707809P22	CAP CER NPO 56P 5% 50V	1	F.:-G1
C103	J707809P19	CAP CER NPO 33P 5% 50V	1	F.:-G2
C104	J707809P18	CAP CER NPO 27P 5% 50V	1	ALL
C106	J707438P14	CAP CER CL2 10N 10% 50V	1	ALL
C107	J707809P21	CAP CER NPO 47P 5% 50V	1	F.:-G1
C107	J707809P19	CAP CER NPO 33P 5% 50V	1	F.:-G2
C108	J707809P21	CAP CER NPO 47P 5% 50V	1	ALL
C109	J707809P16	CAP CER NPO 18P 5% 50V	1	F.:-G1
C109	J707809P13	CAP CER NPO 10P 5% 50V	1	F.:-G2
C110	J707438P14	CAP CER CL2 10N 10% 50V	1	ALL
C111	J707809P25	CAP CER NPO 100P 5% 50V	1	ALL
C112	J707436P77	CAP CER NPO 470P 5% 50V	1	ALL
C113	J707809P17	CAP CER NPO 22P 5% 50V	1	ALL
C114	J707809P25	CAP CER NPO 100P 5% 50V	1	ALL
C115	J707809P24	CAP CER NPO 82P 5% 50V	1	ALL
C116	J707438P14	CAP CER CL2 10N 10% 50V	1	ALL
C117	J707809P26	CAP CER NPO 120P 5% 50V	1	ALL
C118	J707438P14	CAP CER CL2 10N 10% 50V	1	ALL
C119	J707436P77	CAP CER NPO 470P 5% 50V	1	ALL
C120	J707809P11	CAP CER NPO 6P8 .25P 50V	1	F.:-G1
C120	J707809P10	CAP CER NPO 5P6 .25P 50V	1	F.:-G2
C121	J707809P14	CAP CER NPO 12P 5% 50V	1	F.:-G1
C121	J707809P13	CAP CER NPO 10P 5% 50V	1	F.:-G2
C122	A700006P37	CAP MICA 130P 5% 100V	1	F.:-G1
C122	A700006P36	CAP MICA 120P 5% 100V	1	F.:-G2
C123	J707438P14	CAP CER CL2 10N 10% 50V	1	ALL
C124	J707809P26	CAP CER NPO 120P 5% 50V	1	ALL
C125	J707436P77	CAP CER NPO 470P 5% 50V	1	ALL
C126	J707438P14	CAP CER CL2 10N 10% 50V	1	ALL
C127	J707353P6	CAP ELECT 4U7 20% 25V	1	ALL
C128	J707809P27	CAP CER NPO 150P 5% 50V	1	ALL
C129	J707809P27	CAP CER NPO 150P 5% 50V	1	ALL
C130	A700006P34	CAP MICA 100P 5% 100V	1	F.:-G1
C130	A700006P26	CAP MICA 47P 5% 100V	1	F.:-G2
C131	J707809P11	CAP CER NPO 6P8 .25P 50V	1	ALL
C132	A700006P43	CAP MICA 200P 5% 100V	1	F.:-G1
C132	A700006P38	CAP MICA 150P 5% 100V	1	F.:-G2
C133	J707438P26	CAP CER CL2 100N 10% 50V	1	ALL
C134	J707809P26	CAP CER NPO 120P 5% 50V	1	ALL
C135	J707436P77	CAP CER NPO 470P 5% 50V	1	ALL
C136	A700006P38	CAP MICA 150P 5% 100V	1	ALL

CIRCUIT POSITION	COMPONENT ITEM NUMBER	COMPONENT DESCRIPTION	QUANTITY	
C137	A700006P22	CAP MICA 36P 5% 100V	1	F.:-G1
C137	A700006P21	CAP MICA 33P 5% 100V	1	F.:-G2
C138	J707809P27	CAP CER NPO 150P 5% 50V	1	ALL
C139	J707809P27	CAP CER NPO 150P 5% 50V	1	ALL
C140	J707809P27	CAP CER NPO 150P 5% 50V	1	ALL
C141	J707809P27	CAP CER NPO 150P 5% 50V	1	ALL
C142	A700006P4	CAP PFTE 8P2 5% 50V	1	F.:-G1
C142	A700006P4	CAP PFTE 8P2 5% 50V	1	F.:-G2
C143	A700006P19	CAP MICA 27P 5% 100V	1	F.:-G1
C143	A700006P18	CAP MICA 24P 5% 100V	1	F.:-G2
C144	A700006P17	CAP MICA 22P 5% 100V	1	F.:-G1
C144	A700006P16	CAP MICA 20P 5% 100V	1	F.:-G2
C145	A700006P1	CAP PTFE 4P7 10% 100V	1	ALL
C146	J707436P77	CAP CER NPO 470P 5% 50V	1	ALL
C147	J707436P77	CAP CER NPO 470P 5% 50V	1	ALL
C148	J707436P77	CAP CER NPO 470P 5% 50V	1	ALL
C149	J707436P77	CAP CER NPO 470P 5% 50V	1	ALL
C150	J707809P1	CAP CER 1P0 0,25P 50V	1	ALL
C151	J707809P1	CAP CER 1P0 0,25P 50V	1	ALL
C152	J707436P77	CAP CER NPO 470P 5% 50V	1	ALL
C153	J707436P77	CAP CER NPO 470P 5% 50V	1	ALL
C154	J707436P77	CAP CER NPO 470P 5% 50V	1	ALL
C155	J707436P77	CAP CER NPO 470P 5% 50V	1	ALL
C156	J707353P3	CAP ELECT 0U47 20% 50V	1	ALL
C157	J707436P77	CAP CER NPO 470P 5% 50V	1	ALL
C158	J707436P77	CAP CER NPO 470P 5% 50V	1	ALL
C159	J707438P7	CAP CER CL2 2N2 10% 50V	1	ALL
C160	J707436P77	CAP CER NPO 470P 5% 50V	1	ALL
C161	J707438P14	CAP CER CL2 10N 10% 50V	1	ALL
C162	J707438P14	CAP CER CL2 10N 10% 50V	1	ALL
C163	J707438P26	CAP CER CL2 100N 10% 50V	1	ALL
C164	J707436P77	CAP CER NPO 470P 5% 50V	1	ALL
C165	J707809P22	CAP CER NPO 56P 5% 50V	1	ALL
C166	J707436P77	CAP CER NPO 470P 5% 50V	1	ALL
C167	J707809P8	CAP CER 3P9 .25P 50V	1	ALL
C201	J707438P26	CAP CER CL2 100N 10% 50V	1	ALL
C202	J707444P8	CAP TA SOL 22U 20% 16V	1	ALL
C203	J707444P6	CAP TA SOL 4U7 20% 35V	1	ALL
C204	J707436P77	CAP CER NPO 470P 5% 50V	1	ALL
C205	J707412P9	CAP PYES 100N 10% 63V	1	ALL
C301	J707436P3	CAP CER NPO 1P5 .25P 50V	1	ALL
C302	J707438P5	CAP CER CL2 1N 10% 50V	1	ALL
C304	J707436P7	CAP CER NPO 3P3 .25P 50V	1	F.:-G1
C304	J707436P3	CAP CER NPO 1P5 .25P 50V	1	F.:-G2
C305	J707436P12	CAP CER NPO 8P2 .25P 50V	1	ALL
C306	J707483P5	CAP PHEN 0P68 5% 500V	1	F.:-G1
C306	J707483P1	CAP PHEN 0P47 5% 500V	1	F.:-G2
C307	J707438P5	CAP CER CL2 1N 10% 50V	1	ALL
C309	J707436P12	CAP CER NPO 8P2 .25P 50V	1	ALL
C310	J707438P5	CAP CER CL2 1N 10% 50V	1	ALL
C311	J707438P5	CAP CER CL2 1N 10% 50V	1	ALL
C312	J707436P87	CAP CER NPO 1N2 5% 50V	1	ALL

CIRCUIT POSITION	COMPONENT ITEM NUMBER	COMPONENT DESCRIPTION	QUANTITY	
C314	J707436P7	CAP CER NPO 3P3 .25P 50V	1	F.:-G1
C314	J707436P3	CAP CER NPO 1P5 .25P 50V	1	F.:-G2
C315	J707438P5	CAP CER CL2 1N 10% 50V	1	ALL
C316	J707436P5	CAP CER NPO 2P2 .25P 50V	1	F.:-G1
C316	J707436P4	CAP CER NPO 1P8 .25P 50V	1	F.:-G2
C317	J707444P2	CAP TA SOL 0U22 20% 35V	1	ALL
C318	J707438P5	CAP CER CL2 1N 10% 50V	1	ALL
C319	J707436P12	CAP CER NPO 8P2 .25P 50V	1	ALL
C320	J707438P5	CAP CER CL2 1N 10% 50V	1	ALL
C322	J707483P7	CAP PHEN 1P00 5% 500V	1	F.:-G1
C322	J707483P6	CAP PHEN 0P82 5% 500V	1	F.:-G2
C323	J707483P4	CAP PHEN 0P56 5% 500V	1	ALL
C324	J707436P4	CAP CER NPO 1P8 .25P 50V	1	F.:-G1
C324	J707436P3	CAP CER NPO 1P5 .25P 50V	1	F.:-G2
C325	J707438P5	CAP CER CL2 1N 10% 50V	1	ALL
C326	J707436P12	CAP CER NPO 8P2 .25P 50V	1	ALL
C328	J707436P12	CAP CER NPO 8P2 .25P 50V	1	ALL
C331	J707436P12	CAP CER NPO 8P2 .25P 50V	1	ALL
C332	J707436P12	CAP CER NPO 8P2 .25P 50V	1	ALL
C333	J707436P5	CAP CER NPO 2P2 .25P 50V	1	F.:-G1
C333	J707436P4	CAP CER NPO 1P8 .25P 50V	1	F.:-G2
C335	J707438P5	CAP CER CL2 1N 10% 50V	1	ALL
C338	J707436P11	CAP CER 6P8 .25P 50V	1	ALL
C339	J707438P5	CAP CER CL2 1N 10% 50V	1	ALL
C340	J707438P8	CAP CER CL2 3N3 10% 50V	1	ALL
C345	J707436P37	CAP CER NPO 33P 5% 50V	1	ALL
C347	J707438P5	CAP CER CL2 1N 10% 50V	1	ALL
C348	J707438P5	CAP CER CL2 1N 10% 50V	1	ALL
C350	J707436P3	CAP CER NPO 1P5 .25P 50V	1	F.:-G1
C350	J707436P1	CAP CER NPO 1P0 .25P 50V	1	F.:-G2
C351	J707436P10	CAP CER NPO 5P6 .25P 50V	1	F.:-G1
C351	J707436P9	CAP CER NPO 4P7 .25P 50V	1	F.:-G2
C353	J707483P2	CAP PHEN 0P33 5% 500V	1	ALL
C354	J707436P10	CAP CER NPO 5P6 .25P 50V	1	F.:-G1
C354	J707436P9	CAP CER NPO 4P7 .25P 50V	1	F.:-G2
C355	J707483P7	CAP PHEN 1P00 5% 500V	1	F.:-G1
C355	J707483P13	CAP PHEN 0P22 10% 500V	1	F.:-G2
C356	J707438P5	CAP CER CL2 1N 10% 50V	1	ALL
C357	J707436P1	CAP CER NPO 1P0 .25P 50V	1	ALL
C358	J707436P1	CAP CER NPO 1P0 .25P 50V	1	ALL
C401	J707438P8	CAP CER CL2 3N3 10% 50V	1	ALL
C402	J707438P8	CAP CER CL2 3N3 10% 50V	1	ALL
C403	J707438P8	CAP CER CL2 3N3 10% 50V	1	ALL
C404	J707436P9	CAP CER NPO 4P7 .25P 50V	1	ALL
C405	J707438P26	CAP CER CL2 100N 10% 50V	1	ALL
C406	J707436P10	CAP CER NPO 5P6 .25P 50V	1	ALL
C407	J707436P9	CAP CER NPO 4P7 .25P 50V	1	ALL
C408	J707438P5	CAP CER CL2 1N 10% 50V	1	ALL
C409	J707438P8	CAP CER CL2 3N3 10% 50V	1	ALL
C410	J707444P8	CAP TA SOL 22U 20% 16V	1	ALL
C411	J707438P26	CAP CER CL2 100N 10% 50V	1	ALL
C412	J707438P26	CAP CER CL2 100N 10% 50V	1	ALL
C413	J707436P21	CAP CER NPO 15P 5% 50V	1	ALL

CIRCUIT POSITION	COMPONENT ITEM NUMBER	COMPONENT DESCRIPTION	QUANTITY	
C414	J707438P8	CAP CER CL2 3N3 10% 50V	1	ALL
C415	J707438P8	CAP CER CL2 3N3 10% 50V	1	ALL
C416	J708702P16	CAP CER N750 18P 5% 50V	1	ALL
C417	J707436P49	CAP CER NPO 56P 5% 50V	1	ALL
C418	J707438P14	CAP CER CL2 10N 10% 50V	1	ALL
C419	J707438P26	CAP CER CL2 100N 10% 50V	1	ALL
C420	J707438P14	CAP CER CL2 10N 10% 50V	1	ALL
C421	J707438P26	CAP CER CL2 100N 10% 50V	1	ALL
C422	J707438P26	CAP CER CL2 100N 10% 50V	1	ALL
C423	J707436P13	CAP CER NPO 10P 5% 50V	1	ALL
C424	J707438P8	CAP CER CL2 3N3 10% 50V	1	ALL
C425	J707412P13	CAP PYES 470N 10% 63V	1	ALL
C426	J707436P93	CAP CER NPO 2N2 5% 50V	1	ALL
C427	J707436P73	CAP CER NPO 330P 5% 50V	1	ALL
C428	J707436P73	CAP CER NPO 330P 5% 50V	1	ALL
C429	J707438P14	CAP CER CL2 10N 10% 50V	1	ALL
C430	J707444P8	CAP TA SOL 22U 20% 16V	1	ALL
C431	J707444P8	CAP TA SOL 22U 20% 16V	1	ALL
C432	J707438P26	CAP CER CL2 100N 10% 50V	1	ALL
C433	J707438P26	CAP CER CL2 100N 10% 50V	1	ALL
C434	J707438P8	CAP CER CL2 3N3 10% 50V	1	ALL
C435	J707436P1	CAP CER NPO 1P0 .25P 50V	1	ALL
C436	J707438P26	CAP CER CL2 100N 10% 50V	1	ALL
C501	J707412P11	CAP PYES 220N 10% 63V	1	ALL
C502	J707412P11	CAP PYES 220N 10% 63V	1	ALL
C503	J707412P11	CAP PYES 220N 10% 63V	1	ALL
C504	A700235P4	CAP CER N150 1P8 .25P 50V	1	ALL
C505	A700235P4	CAP CER N150 1P8 .25P 50V	1	F.:-G1
C505	A700235P8	CAP CER N150 3P9 .25P 50V	1	F.:-G2
C506	A700235P8	CAP CER N150 3P9 .25P 50V	1	F.:-G1
C506	A700235P7	CAP CER N150 3P3 .25P 50V	1	F.:-G2
C507	A700235P8	CAP CER N150 3P9 .25P 50V	1	F.:-G1
C507	A700235P9	CAP CER N150 4P7 .25P 50V	1	F.:-G2
C508	A700235P12	CAP CER N150 8P2 .25P 50V	1	F.:-G1
C508	A700235P10	CAP CER N150 5P6 .25P 50V	1	F.:-G2
C509	A700235P32	CAP CER N150 11P 5% 50V	1	F.:-G1
C509	A700235P9	CAP CER N150 4P7 5% 50V	1	F.:-G2
C510	A700235P12	CAP CER N150 8P2 .25P 50V	1	F.:-G1
C510	A700235P11	CAP CER N150 6P8 .25P 50V	1	F.:-G2
C512	J707483P7	CAP PHEN 1P00 5% 500V	1	ALL
C513	J707438P3	CAP CER CL2 470P 10% 50V	1	ALL
C515	J707436P9	CAP CER NPO 4P7 .25P 50V	1	ALL
C516	J707436P7	CAP CER NPO 3P3 .25P 50V	1	ALL
C517	J707444P6	CAP TA SOL 4U7 20% 35V	1	ALL
C518	J707436P6	CAP CER NPO 2P7 .25P 50V	1	F.:-G1
C518	J707436P5	CAP CER NPO 2P2 .25P 50V	1	F.:-G2
C519	J707438P3	CAP CER CL2 470P 10% 50V	1	ALL
C520	J707436P6	CAP CER NPO 2P7 .25P 50V	1	F.:-G1
C520	J707436P5	CAP CER NPO 2P2 .25P 50V	1	F.:-G2
C521	J707436P11	CAP CER NPO 6P8 .25P 50V	1	ALL
C522	J707438P3	CAP CER CL2 470P 10% 50V	1	ALL
C523	J707436P2	CAP CER NPO 1P2 .25% 50V	1	F.:-G1
C523	J707436P1	CAP CER NPO 1P0 .25% 50V	1	F.:-G2

CIRCUIT POSITION	COMPONENT ITEM NUMBER	COMPONENT DESCRIPTION	QUANTITY	
C524	J707438P3	CAP CER CL2 470P 10% 50V	1	ALL
C525	J707438P3	CAP CER CL2 470P 10% 50V	1	ALL
C526	J707438P3	CAP CER CL2 470P 10% 50V	1	ALL
C527	J707438P3	CAP CER CL2 470P 10% 50V	1	ALL
C528	J707438P3	CAP CER CL2 470P 10% 50V	1	ALL
C540	J707438P3	CAP CER CL2 470P 10% 50V	1	ALL
C541	J707438P3	CAP CER CL2 470P 10% 50V	1	ALL
C542	J707438P3	CAP CER CL2 470P 10% 50V	1	ALL
C543	J707438P3	CAP CER CL2 470P 10% 50V	1	ALL
C544	J707438P3	CAP CER CL2 470P 10% 50V	1	ALL
C545	J707438P3	CAP CER CL2 470P 10% 50V	1	ALL
C601	J707412P11	CAP PYES 220N 10% 63V	1	ALL
C602	J707412P11	CAP PYES 220N 10% 63V	1	ALL
C603	J707412P11	CAP PYES 220N 10% 63V	1	ALL
C604	A700235P2	CAP CER NPO 1P2 .25P 50V	1	ALL
C605	A700235P1	CAP CER NPO 1P0 .25P 50V	1	F.:-G2
C606	A700235P6	CAP CER N150 2P7 .25P 50V	1	F.:-G1
C606	A700235P4	CAP CER N150 1P8 .25P 50V	1	F.:-G2
C607	A700235P9	CAP CER N150 4P7 .25P 50V	1	F.:-G1
C607	A700235P6	CAP CER N150 2P7 .25P 50V	1	F.:-G2
C608	A700235P8	CAP CER N150 3P9 .25P 50V	1	F.:-G1
C608	A700235P7	CAP CER N150 3P3 .25P 50V	1	F.:-G2
C609	A700235P7	CAP CER N150 3P3 .25P 50V	1	ALL
C610	A700235P10	CAP CER N150 5P6 .25P 50V	1	F.:-G1
C610	A700235P8	CAP CER N150 3P9 .25P 50V	1	F.:-G2
C611	J707436P7	CAP CER NPO 3P3 .25P 50V	1	ALL
C612	J707436P9	CAP CER NPO 4P7 .25P 50V	1	ALL
C613	J707444P6	CAP TA SOL 4U7 20% 35V	1	ALL
C614	J707436P1	CAP CER NPO 1P0 .25P 50V	1	ALL
C615	J707436P77	CAP CER NPO 470P 5% 50V	1	ALL
C616	J707438P3	CAP CER CL2 470P 10% 50V	1	ALL
C617	J707436P1	CAP CER NPO 1P0 .25P 50V	1	ALL
C618	J707436P10	CAP CER NPO 5P6 .25P 50V	1	ALL
C619	J707438P3	CAP CER CL2 470P 10% 50V	1	ALL
C620	J707436P5	CAP CER NPO 2P2 .25P 50V	1	ALL
C621	J707438P3	CAP CER CL2 470P 10% 50V	1	ALL
C624	J707436P69	CAP CER NPO 220P 10% 50V	1	ALL
C625	J707438P26	CAP CER CL2 100N 10% 50V	1	ALL
C626	J707438P5	CAP CER CL2 1N 10% 50V	1	ALL
C627	J707438P14	CAP CER CL2 10N 10% 50V	1	ALL
C628	J707436P89	CAP CER NPO 1N5 5% 50V	1	ALL
C629	J707436P65	CAP CER NPO 150P 5% 50V	1	ALL
C630	J707436P69	CAP CER NPO 220P 5% 50V	1	ALL
C631	J707436P69	CAP CER NPO 220P 10% 50V	1	ALL
C632	J707438P26	CAP CER CL2 100N 10% 50V	1	ALL
C633	J707444P17	CAP TA SOL 47U 20% 35V	1	ALL
C634	J707438P26	CAP CER CL2 100N 10% 50V	1	ALL
C635	J707438P3	CAP CER CL2 470P 10% 50V	1	ALL
C636	J707444P17	CAP TA SOL 47U 20% 35V	1	ALL
C637	J707438P26	CAP CER CL2 100N 10% 50V	1	ALL
C639	J707438P8	CAP CER CL2 3N3 10% 50V	1	ALL
C640	J707412P9	CAP PYES 100N 10% 63V	1	ALL
C641	J707412P13	CAP PYES 470N 10% 63V	1	ALL

CIRCUIT POSITION	COMPONENT ITEM NUMBER	COMPONENT DESCRIPTION	QUANTITY	
C642	J707412P13	CAP PYES 470N 10% 63V	1	ALL
C643	J707438P22	CAP CER CL2 47N 10% 50V	1	ALL
C644	J707436P6	CAP CER NPO 2P7 .25P 50V	1	ALL
C652	J707438P5	CAP CER CL2 1N 10% 50V	1	ALL
C653	J707444P6	CAP TA SOL 4U7 20% 35V	1	ALL
C656	J707436P77	CAP CER NPO 470P 5% 50V	1	ALL
C657	J707438P3	CAP CER CL2 470P 10% 50V	1	ALL
C659	J707438P5	CAP CER CL2 1N 10% 50V	1	ALL
C660	J707438P12	CAP CER CL2 6N8 5% 500V	1	ALL
C665	J707438P3	CAP CER CL2 470P 10% 50V	1	ALL
C666	J707438P3	CAP CER CL2 470P 10% 50V	1	ALL
C667	J707438P3	CAP CER CL2 470P 10% 50V	1	ALL
C701	J707436P29	CAP CER NPO 22P 5% 50V	1	ALL
C702	J708702P22	CAP CER N750 56P 5% 50V	1	ALL
C703	J707436P69	CAP CER NPO 220P 5% 50V	1	ALL
C704	J707436P13	CAP CER NPO 10P 5% 50V	1	ALL
C705	J707438P5	CAP CER CL2 1N 10% 50V	1	ALL
C706	J707438P14	CAP CER CL2 10N 10% 50V	1	ALL
C707	J707436P10	CAP CER NPO 5P6 .25P 50V	1	ALL
C708	J707438P14	CAP CER CL2 10N 10% 50V	1	ALL
C709	J707438P14	CAP CER CL2 10N 10% 50V	1	ALL
D100	A700047P3	DIO SI SIG 1N6263	1	ALL
D101	J706892P1	DIO SI PIN UM 9401	1	ALL
D102	J706892P1	DIO SI PIN UM 9401	1	ALL
D103	J707390P1	DIO SI SIG BAV 74	1	ALL
D300	J709100P2	DIO SI CAP BB 909B	1	ALL
D301	J709100P2	DIO SI CAP BB 909B	1	ALL
D302	J709100P2	DIO SI CAP BB 909B	1	ALL
D303	J709100P2	DIO SI CAP BB 909B	1	ALL
D304	J709100P2	DIO SI CAP BB 909B	1	ALL
D305	J709100P2	DIO SI CAP BB 909B	1	ALL
D306	J706007P1	DIO SI CAP BB 505B	1	ALL
D307	J706007P1	DIO SI CAP BB 505B	1	ALL
D401	A700025P8	DIO SI ZENR 6V8 5% 0,4W	1	ALL
D501	J706007P1	DIO SI CAP BB 505B	1	ALL
D502	J706007P1	DIO SI CAP BB 505B	1	ALL
D503	J706007P1	DIO SI CAP BB 505B	1	ALL
D504	J706007P1	DIO SI CAP BB 505B	1	ALL
D505	J707769P1	DIO SI CAP BBY 31	1	ALL
D601	J706007P1	DIO SI CAP BB 505B	1	ALL
D602	J706007P1	DIO SI CAP BB 505B	1	ALL
D603	J706007P1	DIO SI CAP BB 505B	1	ALL
D604	J706007P1	DIO SI CAP BB 505B	1	ALL
D605	J707389P1	DIO SI SIG BAV 99	1	ALL
D606	J708681P1	DIO SI SIG BAW 56	1	ALL
D607	J707390P1	DIO SI SIG BAV 74	1	ALL
D608	J707390P1	DIO SI SIG BAV 74	1	ALL

CIRCUIT POSITION	COMPONENT ITEM NUMBER	COMPONENT DESCRIPTION	QUANTITY	
D610	J708681P1	DIO SI SIG BAW 56	1	ALL
D701	J707928P2	DIO SI CAP BB 409	1	ALL
D702	J707390P1	DIO SI SIG BAV 74	1	ALL
L100	A700024P1	COIL FIX 100NH 10%	1	ALL
L101	A700024P1	COIL FIX 100NH 10%	1	ALL
L102	K805653G4	COIL ASM 4 1/2T	1	ALL
L103	J707339G1	COIL FIX ASM	1	ALL
L104	A700024P1	COIL FIX 100NH 10%	1	ALL
L105	K805653G2	COIL ASM 2 1/2T	1	ALL
L106	J707256P1	COIL FIX	1	ALL
L107	J707339G1	COIL FIX ASM	1	ALL
L108	K805653G2	COIL ASM 2 1/2T	1	ALL
L109	J707339G1	COIL FIX ASM	1	ALL
L110	J707256P3	COIL FIX	1	ALL
L112	J707339G1	COIL FIX ASM	1	ALL
L113	A700024P1	COIL FIX 100NH 10%	1	F.:-G1
L113	A700024P13	COIL FIX 1.0UH 10%	1	F.:-G2
L114	K805653G4	COIL ASM 4 1/2T	1	ALL
L115	J709287P1	CORE TOROIDAL FERR	1	ALL
L116	J709287P1	CORE TOROIDAL FERR	1	ALL
L117	K805653G2	COIL ASM 2 1/2T	1	ALL
L118	J707339G1	COIL FIX ASM	1	ALL
L119	K805653G4	COIL ASM 4 1/2T	1	ALL
L120	K805653G1	COIL ASM 1 1/2T	1	ALL
L121	A700024P10	COIL FIX 560NH 10%	1	ALL
L122	A700024P25	COIL FIX 10,0UH 10%	1	ALL
L123	A700024P25	COIL FIX 10,0UH 10%	1	ALL
L124	K805653G5	COIL ASM 5 1/2T	1	ALL
L125	K805653G6	COIL ASM 6 1/2T	1	ALL
L126	K805653G3	COIL ASM 3 1/2T	1	ALL
L127	A700024P25	COIL FIX 10,0UH 10%	1	ALL
L128	A700024P25	COIL FIX 10,0UH 10%	1	ALL
L129	A700024P10	COIL FIX 560NH 10%	1	ALL
L301	J709099P3	COIL RF VAR 3 1/2T	1	ALL
L302	J709099P3	COIL RF VAR 3 1/2T	1	ALL
L303	J707486P17	COIL RF FIX 0.39UH 10%	1	ALL
L304	J709099P4	COIL RF VAR 3 1/2T	1	ALL
L305	J707486P2	COIL RF FIX 3.3UH 10%	1	ALL
L306	J709099P5	COIL RF VAR 3 1/2T	1	ALL
L308	J709099P3	COIL RF VAR 3 1/2T	1	ALL
L310	J709099P4	COIL RF VAR 3 1/2T	1	ALL
L312	J708428P2	COIL RF VAR 45 MHZ	1	ALL
L313	J709099P4	COIL RF VAR 3 1/2T	1	ALL
L314	J709099P3	COIL RF VAR 3 1/2T	1	ALL
L401	J707486P10	COIL RF FIX 1,5UH 10%	1	ALL
L403	K805570G2	COIL ASM	1	ALL
L404	K805570G1	COIL ASM	1	ALL
L405	J708428P1	COIL RF VAR 45 MHZ	1	ALL
L406	K805570G3	COIL ASM	1	ALL

CIRCUIT POSITION	COMPONENT ITEM NUMBER	COMPONENT DESCRIPTION	QUANTITY	
L407	A700024P25	COIL FIX 10,0UH 10%	1	ALL
L408	J708428P2	COIL RF VAR 45 MHZ	1	ALL
L409	J707431P1	COIL RF VAR 455KHZ 25%	1	ALL
L410	J707431P1	COIL RF VAR 455KHZ 25%	1	ALL
L501	A700024P13	COIL FIX 1,0UH 10%	1	ALL
L502	A700024P13	COIL FIX 1,0UH 10%	1	ALL
L503	A700024P13	COIL FIX 1,0UH 10%	1	ALL
L504	A700024P13	COIL FIX 1,0UH 10%	1	ALL
L505	L855671P1	COIL RADIO FREQUENCY	1	ALL
L506	A700024P13	COIL FIX 1,0UH 10%	1	ALL
L507	A700024P13	COIL FIX 1,0UH 10%	1	ALL
L508	A700024P1	COIL FIX 100NH 10%	1	ALL
L601	A700024P13	COIL FIX 1,0UH 10%	1	ALL
L602	A700024P13	COIL FIX 1,0UH 10%	1	ALL
L603	A700024P13	COIL FIX 1,0UH 10%	1	ALL
L604	A700024P13	COIL FIX 1,0UH 10%	1	ALL
L605	L855671P1	COIL RADIO FREQUENCY	1	ALL
L606	A700024P13	COIL FIX 1,0UH 10%	1	ALL
L607	A700024P13	COIL FIX 1,0UH 10%	1	ALL
L608	A700024P2	COIL FIX 120NH 10%	1	ALL
L609	K805653G10	COIL RF FIXED 10 1/2T	1	F.:-G1
L609	K805653G6	COIL RF FIXED 6 1/2T	1	F.:-G2
L701	K805570G4	COIL ASM	1	ALL
L702	A700024P43	COIL FIX 330UH 10%	1	ALL
L703	A700024P27	COIL FIX 15,0UH 10%	1	ALL
P102	J707064P112	CONN PWB FEM 12-CKT	1	ALL
P105	A701883P4	CONT EL	1	ALL
Q100	J707388P1	TSTR NPN SI BFR 53	1	ALL
Q101	J707388P1	TSTR NPN SI BFR 53	1	ALL
Q102	A701940P1	TSTR NPN SI RF-PWR 0.4W	1	ALL
Q103	A700066P2	TSTR NPN SI RF-PWR 2W	1	ALL
Q104	J709163P1	TSTR NPN SI RF-PWR 10W	1	ALL
Q105	J709162P1	TSTR NPN SI RF-PWR 27W	1	ALL
Q106	J707432P1	TSTR PNP SI BCX 18	1	ALL
Q107	J707386P1	TSTR NPN SI BCW 32	1	ALL
Q108	J708406P1	TSTR SI NPN BD 233	1	ALL
Q109	J707386P1	TSTR NPN SI BCW 32	1	ALL
Q201	J707435P1	TSTR PNP SI BC 369	1	ALL
Q202	J707386P1	TSTR NPN SI BCW 32	1	ALL
Q203	J707432P1	TSTR PNP SI BCX 18	1	ALL
Q204	J707386P1	TSTR NPN SI BCW 32	1	ALL
Q301	J706011P2	TSTR NPN SI BFR 91A	1	ALL
Q302	J708315P1	TSTR JFET SI 2N5245	1	ALL
Q401	J707817P1	TSTR JFET SI J 309	1	ALL

CIRCUIT POSITION	COMPONENT ITEM NUMBER	COMPONENT DESCRIPTION	QUANTITY	
Q402	J707817P1	TSTR JFET SI J 309	1	ALL
Q403	J707419P1	TSTR JFET SI BF 511	1	ALL
Q404	J708418P1	TSTR NPN SI BFS 20	1	ALL
Q405	J708418P1	TSTR NPN SI BFS 20	1	ALL
Q406	J708418P1	TSTR NPN SI BFS 20	1	ALL
Q407	J707386P1	TSTR NPN SI BCW 32	1	ALL
Q408	J707387P1	TSTR PNP SI BCW 30	1	ALL
Q501	J707817P1	TSTR JFET SI J 309	1	ALL
Q502	J707388P1	TSTR NPN SI BFR 53	1	ALL
Q601	J707817P1	TSTR JFET SI J 309	1	ALL
Q602	J707388P1	TSTR NPN SI BFR 53	1	ALL
Q603	J708318P1	TSTR PNP SI BFT 92	1	ALL
Q604	J707433P1	TSTR MFET SI BF 989	1	ALL
Q605	J707386P1	TSTR NPN SI BCW 32	1	ALL
Q612	J707386P1	TSTR NPN SI BCW 32	1	ALL
Q613	J707386P1	TSTR NPN SI BCW 32	1	ALL
Q701	J707419P1	TSTR JFET SI BF 511	1	ALL
Q702	J707387P1	TSTR PNP SI BCW 30	1	ALL
R100	J707385P122	RES MFILM 1K2 5% 1/8W	1	ALL
R101	J707385P472	RES MFILM 4K7 5% 1/8W	1	ALL
R102	J707385P270	RES MFILM 27R 5% 1/8W	1	ALL
R103	J707385P470	RES MFILM 47R 5% 1/8W	1	ALL
R104	J707385P102	RES MFILM 1K0 5% 1/8W	1	ALL
R105	J707385P182	RES MFILM 1K8 5% 1/8W	1	ALL
R106	J707385P470	RES MFILM 47R 5% 1/8W	1	ALL
R107	J707385P680	RES MFILM 68R 5% 1/8W	1	ALL
R108	J707385P820	RES MFILM 82R 5% 1/8W	1	ALL
R109	J707385P100	RES MFILM 10R 5% 1/8W	1	ALL
R110	J707385P100	RES MFILM 10R 5% 1/8W	1	ALL
R111	J707385P100	RES MFILM 10R 5% 1/8W	1	ALL
R112	J707385P947	RES MFILM 4R7 20% 1/8W	1	ALL
R113	J707385P100	RES MFILM 10R 5% 1/8W	1	ALL
R114	J707385P947	RES MFILM 4R7 20% 1/8W	1	ALL
R115	J707385P100	RES MFILM 10R 5% 1/8W	1	ALL
R116	J707385P220	RES MFILM 22R 5% 1/8W	1	ALL
R117	J707385P220	RES MFILM 22R 5% 1/8W	1	ALL
R118	J707385P473	RES MFILM 47K 5% 1/8W	1	ALL
R119	J707385P820	RES MFILM 82R 5% 1/8W	1	ALL
R120	J707385P820	RES MFILM 82R 5% 1/8W	1	ALL
R121	J707385P333	RES MFILM 33K 5% 1/8W	1	ALL
R122	J707385P221	RES MFILM 220R 5% 1/8W	1	ALL
R123	J707385P221	RES MFILM 220R 5% 1/8W	1	ALL
R132	J708538P9	RES VAR CER 200K 20% 0,5W	1	ALL
R133	J708538P4	RES VAR CER 5K 20% 0,5W	1	ALL
R134	J707385P100	RES MFILM 10R 5% 1/8W	1	ALL
R135	J706147P2	RES THERM PTC 80R 25%	1	ALL
R136	J707385P682	RES MFILM 6K8 5% 1/8W	1	ALL
R137	J707385P223	RES MFILM 22K 5% 1/8W	1	ALL
R138	J707385P472	RES MFILM 4K7 5% 1/8W	1	ALL

CIRCUIT POSITION	COMPONENT ITEM NUMBER	COMPONENT DESCRIPTION	QUANTITY	
R139	J707385P472	RES MFILM 4K7 5% 1/8W	1	ALL
R140	J707385P333	RES MFILM 33K 5% 1/8W	1	ALL
R141	J707385P333	RES MFILM 33K 5% 1/8W	1	ALL
R142	J707385P104	RES MFILM 100K 5% 1/8W	1	ALL
R143	J707385P222	RES MFILM 2K2 5% 1/8W	1	ALL
R144	J707385P222	RES MFILM 2K2 5% 1/8W	1	ALL
R145	J707385P682	RES MFILM 6K8 5% 1/8W	1	ALL
R146	J707385P273	RES MFILM 27K 5% 1/8W	1	ALL
R147	J707385P104	RES MFILM 100K 5% 1/8W	1	ALL
R148	J707385P123	RES MFILM 12K 5% 1/8W	1	ALL
R149	J707385P472	RES MFILM 4K7 5% 1/8W	1	ALL
R150	J707385P391	RES MFILM 390R 5% 1/8W	1	ALL
R151	J707385P683	RES MFILM 68K 5% 1/8W	1	ALL
R152	J707385P104	RES MFILM 100K 5% 1/8W	1	ALL
R153	J707385P221	RES MFILM 220R 5% 1/8W	1	ALL
R154	J707385P274	RES MFILM 270K 5% 1/8W	1	ALL
R155	J707385P222	RES MFILM 2K2 5% 1/8W	1	ALL
R156	J707385P102	RES MFILM 1K0 5% 1/8W	1	ALL
R157	J707385P392	RES MFILM 3K9 5% 1/8W	1	ALL
R201	J707385P561	RES MFILM 560R 5% 1/8W	1	ALL
R202	J707385P271	RES MFILM 270R 5% 1/8W	1	ALL
R203	J707385P153	RES MFILM 15K 5% 1/8W	1	ALL
R204	J707385P153	RES MFILM 15K 5% 1/8W	1	ALL
R205	J707385P472	RES MFILM 4K7 5% 1/8W	1	ALL
R206	J707385P272	RES MFILM 2K7 5% 1/8W	1	ALL
R207	J707385P563	RES MFILM 56K 5% 1/8W	1	ALL
R208	J707385P563	RES MFILM 56K 5% 1/8W	1	ALL
R209	J707385P271	RES MFILM 270R 5% 1/8W	1	ALL
R301	J707385P102	RES MFILM 1K0 5% 1/8W	1	F.:-G1
R301	J707385P182	RES MFILM 1K8 5% 1/8W	1	F.:-G2
R302	J707385P561	RES MFILM 560R 5% 1/8W	1	ALL
R303	J707385P104	RES MFILM 100K 5% 1/8W	1	ALL
R304	J707385P104	RES MFILM 100K 5% 1/8W	1	ALL
R305	J707385P900	RES MFILM 0R0 5% 1/8W,JUMP.	1	ALL
R306	J707385P222	RES MFILM 2K2 5% 1/8W	1	ALL
R307	J707385P681	RES MFILM 680R 5% 1/8W	1	ALL
R308	J707385P470	RES MFILM 47R 5% 1/8W	1	ALL
R309	J707385P270	RES MFILM 27R 5% 1/8W	1	ALL
R310	J707385P104	RES MFILM 100K 5% 1/8W	1	ALL
R311	J707385P560	RES MFILM 56R 5% 1/8W	1	ALL
R312	J707385P104	RES MFILM 100K 5% 1/8W	1	ALL
R314	J707385P104	RES MFILM 100K 5% 1/8W	1	ALL
R316	J707385P104	RES MFILM 100K 5% 1/8W	1	ALL
R317	J707385P182	RES MFILM 1K8 5% 1/8W	1	ALL
R318	J707385P100	RES MFILM 10R 5% 1/8W	1	ALL
R319	J707385P101	RES MFILM 100R 5% 1/8W	1	ALL
R321	J707385P270	RES MFILM 27R 5% 1/8W	1	ALL
R322	J707385P391	RES MFILM 390R 5% 1/8W	1	F.:-G1
R322	J707385P471	RES MFILM 470R 5% 1/8W	1	F.:-G2
R323	J707385P104	RES MFILM 100K 5% 1/8W	1	ALL
R324	J707385P104	RES MFILM 100K 5% 1/8W	1	ALL
R325	J707385P100	RES MFILM 10R 5% 1/8W	1	ALL

CIRCUIT POSITION	COMPONENT ITEM NUMBER	COMPONENT DESCRIPTION	QUANTITY	
R326	J707385P392	RES MFILM 3K9 5% 1/8W	1	ALL
R327	J707385P102	RES MFILM 1K0 5% 1/8W	1	ALL
R401	J707385P560	RES MFILM 56R 5% 1/8W	1	ALL
R402	J707385P100	RES MFILM 10R 5% 1/8W	1	ALL
R403	J707385P332	RES MFILM 3K3 5% 1/8W	1	ALL
R405	J707385P100	RES MFILM 10R 5% 1/8W	1	ALL
R406	J707385P820	RES MFILM 82R 5% 1/8W	1	ALL
R407	J707385P470	RES MFILM 47R 5% 1/8W	1	ALL
R408	J707385P470	RES MFILM 47R 5% 1/8W	1	ALL
R410	J707385P272	RES MFILM 2K7 5% 1/8W	1	ALL
R411	J707385P682	RES MFILM 6K8 5% 1/8W	1	ALL
R412	J707385P272	RES MFILM 2K7 5% 1/8W	1	ALL
R413	J707385P821	RES MFILM 820R 5% 1/8W	1	ALL
R414	J707385P220	RES MFILM 22R 5% 1/8W	1	ALL
R415	J707385P222	RES MFILM 2K2 5% 1/8W	1	ALL
R416	J707385P562	RES MFILM 5K6 5% 1/8W	1	ALL
R417	J707385P103	RES MFILM 10K 5% 1/8W	1	ALL
R418	J707385P153	RES MFILM 15K 5% 1/8W	1	ALL
R419	J707385P182	RES MFILM 1K8 5% 1/8W	1	ALL
R420	J707385P182	RES MFILM 1K8 5% 1/8W	1	ALL
R421	J707385P182	RES MFILM 1K8 5% 1/8W	1	ALL
R422	J707385P473	RES MFILM 47K 5% 1/8W	1	ALL
R423	J707385P153	RES MFILM 15K 5% 1/8W	1	ALL
R424	J708538P5	RES VAR CER 10K 20% 0,5W	1	ALL
R425	J707385P272	RES MFILM 2K7 5% 1/8W	1	ALL
R426	J707385P563	RES MFILM 56K 5% 1/8W	1	ALL
R427	J707385P273	RES MFILM 27K 5% 1/8W	1	ALL
R428	J707385P683	RES MFILM 68K 5% 1/8W	1	ALL
R429	J707385P104	RES MFILM 100K 5% 1/8W	1	ALL
R430	J707385P334	RES MFILM 330K 5% 1/8W	1	ALL
R431	J707385P473	RES MFILM 47K 5% 1/8W	1	ALL
R432	J707385P473	RES MFILM 47K 5% 1/8W	1	ALL
R433	J707385P271	RES MFILM 270R 5% 1/8W	1	ALL
R434	J707385P102	RES MFILM 1K0 5% 1/8W	1	ALL
R435	J706147P3	RES THERM PTC 250R 25%	1	ALL
R436	J707385P392	RES MFILM 3K9 5% 1/8W	1	ALL
R437	J707406P7	RES THERM NTC 220R 10%	1	ALL
R438	J707385P222	RES MFILM 2K2 5% 1/8W	1	ALL
R439	J707385P392	RES MFILM 3K9 5% 1/8W	1	ALL
R440	J707385P392	RES MFILM 3K9 5% 1/8W	1	ALL
R441	J707385P101	RES MFILM 100R 5% 1/8W	1	ALL
R442	J708538P6	RES VAR CER 20K 20% 0,5W	1	ALL
R444	J707385P473	RES MFILM 47K 5% 1/8W	1	ALL
R445	J707385P273	RES MFILM 27K 5% 1/8W	1	ALL
R446	J707385P224	RES MFILM 220K 5% 1/8W	1	ALL
R447	J707385P392	RES MFILM 3K9 5% 1/8W	1	ALL
R448	J707385P101	RES MFILM 100R 5% 1/8W	1	ALL
R449	J707385P470	RES MFILM 47R 5% 1/8W	1	ALL
R450	J707385P103	RES MFILM 10K 5% 1/8W	1	ALL
R451	J707385P332	RES MFILM 3K3 5% 1/8W	1	ALL
R501	J707385P122	RES MFILM 1K2 5% 1/8W	1	ALL
R502	J707385P122	RES MFILM 1K2 5% 1/8W	1	ALL

CIRCUIT POSITION	COMPONENT ITEM NUMBER	COMPONENT DESCRIPTION	QUANTITY	
R503	J707385P122	RES MFILM 1K2 5% 1/8W	1	ALL
R504	J707385P104	RES MFILM 100K 5% 1/8W	1	ALL
R505	J707385P104	RES MFILM 100K 5% 1/8W	1	ALL
R506	J707385P104	RES MFILM 100K 5% 1/8W	1	ALL
R508	J707385P103	RES MFILM 10K 5% 1/8W	1	ALL
R509	J707385P910	RES MFILM 1R0 20% 1/8W	1	ALL
R510	J707385P332	RES MFILM 3K3 5% 1/8W	1	ALL
R512	J707385P561	RES MFILM 560R 5% 1/8W	1	ALL
R513	J707385P183	RES MFILM 18K 5% 1/8W	1	ALL
R514	J707385P472	RES MFILM 4K7 5% 1/8W	1	ALL
R515	J707385P470	RES MFILM 47R 5% 1/8W	1	ALL
R517	J707385P101	RES MFILM 100R 5% 1/8W	1	ALL
R518	J707385P470	RES MFILM 47R 5% 1/8W	1	ALL
R519	J707385P470	RES MFILM 47R 5% 1/8W	1	ALL
R529	J707385P392	RES MFILM 3K9 5% 1/8W	1	ALL
R601	J707385P122	RES MFILM 1K2 5% 1/8W	1	ALL
R602	J707385P122	RES MFILM 1K2 5% 1/8W	1	ALL
R603	J707385P122	RES MFILM 1K2 5% 1/8W	1	ALL
R604	J707385P104	RES MFILM 100K 5% 1/8W	1	ALL
R605	J707385P104	RES MFILM 100K 5% 1/8W	1	ALL
R606	J707385P104	RES MFILM 100K 5% 1/8W	1	ALL
R607	J707385P561	RES MFILM 560R 5% 1/8W	1	ALL
R608	J707385P221	RES MFILM 220R 5% 1/8W	1	ALL
R609	J707385P472	RES MFILM 4K7 5% 1/8W	1	ALL
R610	J707385P183	RES MFILM 18K 5% 1/8W	1	ALL
R611	J707385P271	RES MFILM 270R 5% 1/8W	1	ALL
R612	J707385P102	RES MFILM 1K0 5% 1/8W	1	ALL
R613	J707385P101	RES MFILM 100R 5% 1/8W	1	ALL
R614	J707385P561	RES MFILM 560R 5% 1/8W	1	ALL
R615	J707385P272	RES MFILM 2K7 5% 1/8W	1	ALL
R616	J707385P470	RES MFILM 47R 5% 1/8W	1	ALL
R617	J707385P683	RES MFILM 68K 5% 1/8W	1	ALL
R618	J707385P683	RES MFILM 68K 5% 1/8W	1	ALL
R619	J707385P104	RES MFILM 100K 5% 1/8W	1	ALL
R620	J707385P271	RES MFILM 270R 5% 1/8W	1	ALL
R621	J707385P561	RES MFILM 560R 5% 1/8W	1	ALL
R622	J707385P102	RES MFILM 1K0 5% 1/8W	1	ALL
R623	J707385P224	RES MFILM 220K 5% 1/8W	1	ALL
R624	J707385P223	RES MFILM 22K 5% 1/8W	1	ALL
R625	J707385P470	RES MFILM 47R 5% 1/8W	1	ALL
R626	J707385P100	RES MFILM 10R 5% 1/8W	1	ALL
R627	J707385P103	RES MFILM 10K 5% 1/8W	1	ALL
R628	J707385P224	RES MFILM 220K 5% 1/8W	1	ALL
R629	J707385P393	RES MFILM 39K 5% 1/8W	1	ALL
R630	J707385P100	RES MFILM 10R 5% 1/8W	1	ALL
R631	J707385P824	RES MFILM 820K 5% 1/8W	1	ALL
R632	J707385P223	RES MFILM 22K 5% 1/8W	1	ALL
R633	J707385P824	RES MFILM 820K 5% 1/8W	1	ALL
R634	J707385P123	RES MFILM 12K 5% 1/8W	1	ALL
R635	J707385P102	RES MFILM 1K0 5% 1/8W	1	ALL
R636	J707385P332	RES MFILM 3K3 5% 1/8W	1	ALL
R637	J707385P181	RES MFILM 180R 5% 1/8W	1	ALL
R638	J707385P154	RES MFILM 150K 5% 1/8W	1	ALL

CIRCUIT POSITION	COMPONENT ITEM NUMBER	COMPONENT DESCRIPTION	QUANTITY	
R639	J707385P682	RES MFILM 6K8 5% 1/8W	1	ALL
R640	J707385P105	RES MFILM 1M0 10% 1/8W	1	ALL
R641	J707385P184	RES MFILM 180K 5% 1/8W	1	ALL
R642	J707385P184	RES MFILM 180K 5% 1/8W	1	ALL
R643	J707385P105	RES MFILM 1M0 10% 1/8W	1	ALL
R644	J707385P473	RES MFILM 47K 5% 1/8W	1	F.:-G1
R644	J707385P563	RES MFILM 56K 5% 1/8W	1	F.:-G2
R645	J707385P103	RES MFILM 10K 5% 1/8W	1	ALL
R646	J707385P562	RES MFILM 5K6 5% 1/8W	1	F.:-G1
R646	J707385P472	RES MFILM 4K7 5% 1/8W	1	F.:-G2
R647	J707385P333	RES MFILM 33K 5% 1/8W	1	ALL
R648	J707385P823	RES MFILM 82K 5% 1/8W	1	F.:-G1
R648	J707385P683	RES MFILM 68K 5% 1/8W	1	F.:-G2
R649	J707385P393	RES MFILM 39K 5% 1/8W	1	F.:-G1
R649	J707385P563	RES MFILM 56K 5% 1/8W	1	F.:-G2
R650	J707385P333	RES MFILM 33K 5% 1/8W	1	F.:-G1
R650	J707385P273	RES MFILM 27K 5% 1/8W	1	F.:-G2
R651	J707385P273	RES MFILM 27K 5% 1/8W	1	F.:-G1
R651	J707385P183	RES MFILM 18K 5% 1/8W	1	F.:-G2
R652	J707385P103	RES MFILM 10K 5% 1/8W	1	F.:-G1
R652	J707385P103	RES MFILM 10K 5% 1/8W	1	F.:-G2
R653	J707385P333	RES MFILM 33K 5% 1/8W	1	ALL
R654	J707385P562	RES MFILM 5K6 5% 1/8W	1	ALL
R655	J707385P183	RES MFILM 18K 5% 1/8W	1	ALL
R656	J707385P393	RES MFILM 39K 5% 1/8W	1	ALL
R657	J707385P823	RES MFILM 82K 5% 1/8W	1	ALL
R658	J707385P154	RES MFILM 150K 5% 1/8W	1	ALL
R659	J707385P223	RES MFILM 22K 5% 1/8W	1	F.:-G1
R659	J707385P153	RES MFILM 15K 5% 1/8W	1	F.:-G2
R660	J707385P333	RES MFILM 33K 5% 1/8W	1	F.:-G1
R660	J707385P273	RES MFILM 27K 5% 1/8W	1	F.:-G2
R661	J707385P333	RES MFILM 33K 5% 1/8W	1	F.:-G1
R661	J707385P273	RES MFILM 27K 5% 1/8W	1	F.:-G2
R662	J707385P473	RES MFILM 47K 5% 1/8W	1	ALL
R663	J708538P6	RES VAR CER 20K 20% 0,5W	1	ALL
R664	J707385P683	RES MFILM 68K 5% 1/8W	1	F.:-G1
R664	J707385P393	RES MFILM 39K 5% 1/8W	1	F.:-G2
R665	J707385P824	RES MFILM 820K 5% 1/8W	1	ALL
R666	J707385P124	RES MFILM 120K 5% 1/8W	1	ALL
R667	J707385P124	RES MFILM 120K 5% 1/8W	1	ALL
R668	J707385P122	RES MFILM 1K2 5% 1/8W	1	ALL
R669	J707385P221	RES MFILM 220R 5% 1/8W	1	ALL
R670	J707385P103	RES MFILM 10K 5% 1/8W	1	ALL
R671	J707385P562	RES MFILM 5K6 5% 1/8W	1	ALL
R672	J707385P822	RES MFILM 8K2 5% 1/8W	1	ALL
R673	J707385P822	RES MFILM 8K2 5% 1/8W	1	ALL
R674	J707385P101	RES MFILM 100R 5% 1/8W	1	ALL
R675	J708538P5	RES VAR CER 10K 20% 0,5W	1	ALL
R676	J707385P123	RES MFILM 12K 5% 1/8W	1	ALL
R677	J708538P5	RES VAR CER 10K 20% 0,5W	1	ALL
R678	J707385P470	RES MFILM 47R 5% 1/8W	1	ALL
R679	J707385P821	RES MFILM 820R 5% 1/8W	1	ALL
R680	J708538P5	RES VAR CER 10K 20% 0,5W	1	ALL
R681	J707385P223	RES MFILM 22K 5% 1/8W	1	ALL

CIRCUIT POSITION	COMPONENT ITEM NUMBER	COMPONENT DESCRIPTION	QUANTITY	
R682	J707385P223	RES MFILM 22K 5% 1/8W	1	ALL
R683	J707385P223	RES MFILM 22K 5% 1/8W	1	ALL
R684	J707385P183	RES MFILM 18K 5% 1/8W	1	ALL
R685	J707385P183	RES MFILM 18K 5% 1/8W	1	ALL
R686	J707385P103	RES MFILM 10K 5% 1/8W	1	ALL
R687	J707385P103	RES MFILM 10K 5% 1/8W	1	ALL
R689	J707385P105	RES MFILM 1M0 10% 1/8W	1	ALL
R690	J707385P124	RES MFILM 120K 5% 1/8W	1	ALL
R691	J707385P273	RES MFILM 27K 5% 1/8W	1	ALL
R692	J707385P223	RES MFILM 22K 5% 1/8W	1	ALL
R693	J707385P105	RES MFILM 1M0 10% 1/8W	1	ALL
R694	J707385P223	RES MFILM 22K 5% 1/8W	1	ALL
R695	J707385P105	RES MFILM 1M0 10% 1/8W	1	ALL
R696	J707385P223	RES MFILM 22K 5% 1/8W	1	ALL
R697	J707385P105	RES MFILM 1M0 10% 1/8W	1	ALL
R698	J707385P124	RES MFILM 120K 5% 1/8W	1	ALL
R701	J708666P1	RES THERM NTC 5K 2%	1	ALL
R702	A701250P413	RES MFILM 133K 1% 1/4W	1	ALL
R703	A701250P213	RES MFILM 1K33 1% 1/4W	1	ALL
R704	A701250P325	RES MFILM 17K8 1% 1/4W	1	ALL
R705	J708666P2	RES THERM NTC 20K 2%	1	ALL
R706	J708666P2	RES THERM NTC 20K 2%	1	ALL
R707	J707385P104	RES MFILM 100K 5% 1/8W	1	ALL
R708	J707385P105	RES MFILM 1M0 10% 1/8W	1	ALL
R709	J707385P181	RES MFILM 180R 5% 1/8W	1	ALL
R710	J707385P101	RES MFILM 100R 5% 1/8W	1	ALL
R711	J707385P223	RES MFILM 22K 5% 1/8W	1	ALL
R712	J707385P154	RES MFILM 150K 5% 1/8W	1	ALL
R713	J707385P821	RES MFILM 820R 5% 1/8W	1	ALL
R714	J707385P104	RES MFILM 100K 5% 1/8W	1	ALL
U100	J708165P2	IC LIN OP-AMP 324	1	ALL
U201	J708333P1	IC LIN VR FIX 4785	1	ALL
U401	J707449P1	IC LIN IF-AMP 3357	1	ALL
U402	M905766G2	INT CKT SQ 4003	1	ALL
U601	J708165P4	IC LIN OP-AMP 358	1	ALL
U602	J708165P4	IC LIN OP-AMP 358	1	ALL
U603	J708165P4	IC LIN OP-AMP 358	1	ALL
U604	J708165P4	IC LIN OP-AMP 358	1	ALL
U606	J707243P1	IC DIG REG 4094 CMOS	1	ALL
U607	J707374P4	IC PLL PRESC ECL 12018	1	ALL
U608	B800902P1	IC CMOS SYNTHESIZER	1	ALL
U609	J708165P4	IC LIN OP-AMP 358	1	ALL
U610	J708503P2	IC LIN CMPAR LM 339D	1	ALL
U615	J708621P2	CPLR OPTO PC 827	1	ALL
U616	J708503P2	IC LIN CMPAR LM 339D	1	ALL
W001	A700184P1	RES WIRE JMPR	1	ALL

CIRCUIT POSITION	COMPONENT ITEM NUMBER	COMPONENT DESCRIPTION	QUANTITY	
W003	J707256P1	COIL FIX	1	ALL
W004	J707256P1	COIL FIX	1	ALL
W005	J708717P1	STRAP	1	ALL
W006	J709241P1	STRAP	1	ALL
W007	J709241P1	STRAP	1	ALL
Y401	J708426P2	CRYSTAL UNIT 45.455MHZ	1	ALL
Y701	J708424P4	CRYSTAL UNIT 7.3978MHZ	1	ALL
Z401	J708330P3	FLTR CRY 45.0	1	ALL
Z402	J707446P4	FLT 455KHZ	1	ALL
Z403	J707446P4	FLT 455KHZ	1	ALL
0002	M905903P1R0	CPNT BD PW, REVISION NO.:0	1	ALL
0006	J708966G1	HEAT SINK MODF	1	ALL
0007	K805569G2	SHIELD METALLIZED	1	ALL
0008	J706281P6	CORE SCREW FERR U 10	8	F.:-G1
0008	J706281P6	CORE SCREW FERR U 10	1	F.:-G2
0009	J707256P4	COIL FIX	1	ALL
0010	J707256P4	COIL FIX	1	ALL
0011	J707256P4	COIL FIX	1	ALL

DATE: 10/ 6/1988

Pos	Code No	Description	Qt
	M905902G1	RF6774S25L 200MHZ LOW BAND	
	M905902G2	RF6774S25H 200MHZ HIGH BAND	
C100	J707809P13	CAP CER NP0 10P 5%	1
C101	J707436P77	CAP CER NP0 470P 5%	1
C102	J707809P8	CAP CER NP0 3P9 .25P	1
C103	J707809P22	CAP CER NP0 56P 5 G1	1
C103	J707809P19	CAP CER NP0 33P 5 G2	1
C104	J707809P18	CAP CER NP0 27P 5%	1
C106	J707438P14	CAP CER CL2 10N 10%	1
C107	J707809P21	CAP CER NP0 47P 5 G1	1
C107	J707809P19	CAP CER NP0 33P 5 G2	1
C108	J707809P21	CAP CER NP0 47P 5%	1
C109	J707809P16	CAP CER NP0 18P 5 G1	1
C109	J707809P13	CAP CER NP0 10P 5 G2	1
C110	J707438P14	CAP CER CL2 10N 10%	1
C111	J707809P25	CAP CER NP0 100P 5%	1
C112	J707436P77	CAP CER NP0 470P 5%	1
C113	J707809P17	CAP CER NP0 22P 5%	1
C114	J707809P25	CAP CER NP0 100P 5%	1
C115	J707809P24	CAP CER NP0 82P 5%	1
C116	J707438P26	CAP CER CL2 100N 10%	1
C117	J707809P26	CAP CER NP0 120P 5%	1
C119	J707436P77	CAP CER NP0 470P 5%	1
C120	J707809P11	CAP CER NP0 6P8 .25 G1	1
C120	J707809P10	CAP CER NP0 5P6 .25 G2	1
C121	J707809P14	CAP CER NP0 12P 5 G1	1
C121	J707809P13	CAP CER NP0 10P 5 G2	1
C122	A700006P38	CAP MICA 150P 5%	1
C123	J707438P14	CAP CER CL2 10N 10%	1
C124	J707809P27	CAP CER NP0 150P 5%	1
C125	J707436P77	CAP CER NP0 470P 5%	1
C126	J707438P14	CAP CER CL2 10N 10%	1
C127	J707353P6	CAP ELECT 4U7 25V	1
C128	J707809P27	CAP CER NP0 150P 5%	1
C129	J707809P27	CAP CER NP0 150P 5%	1
C130	A700006P17	CAP MICA 22P 5 G1	1
C130	A700006P6	CAP MICA 10P 5 G2	1
C131	J707809P11	CAP CER NP0 6P8 .25 G1	1
C131	J707809P8	CAP CER NP0 3P9 .25 G2	1
C132	A700006P38	CAP MICA 150P 5%	1
C133	J707438P14	CAP CER CL2 10N 10%	1
C134	J707809P27	CAP CER NP0 150P 5%	1
C135	J707436P77	CAP CER NP0 470P 5%	1
C136	A700006P35	CAP MICA 110P 5 G1	1
C136	A700006P33	CAP MICA 91P 5 G2	1
C137	A700006P17	CAP MICA 22P 5%	1
C138	J707809P27	CAP CER NP0 150P 5%	1
C139	J707809P27	CAP CER NP0 150P 5%	1
C140	J707809P27	CAP CER NP0 150P 5%	1
C141	J707809P27	CAP CER NP0 150P 5%	1
C142	A700006P4	CAP PTFE 8P2 10%	1
C143	A700006P19	CAP MICA 27P 5 G1	1
C143	A700006P18	CAP MICA 24P 5 G2	1
C144	A700006P17	CAP MICA 22P 5%	1
C145	A700006P1	CAP PTFE 4P7 10 G1	1
C145	A700006P4	CAP PTFE 8P2 10 G2	1
C146	J707436P77	CAP CER NP0 470P 5%	1
C147	J707436P77	CAP CER NP0 470P 5%	1
C148	J707436P77	CAP CER NP0 470P 5%	1
C149	J707436P77	CAP CER NP0 470P 5%	1
C150	J707809P1	CAP CER NP0 1P0 .25P	1
C151	J707809P1	CAP CER NP0 1P0 .25P	1
C152	J707436P77	CAP CER NP0 470P 5%	1
C153	J707436P77	CAP CER NP0 470P 5%	1
C154	J707436P77	CAP CER NP0 470P 5%	1
C155	J707436P77	CAP CER NP0 470P 5%	1
C156	J707353P3	CAP ELECT 0U47 50V	1
C157	J707436P77	CAP CER NP0 470P 5%	1
C158	J707436P77	CAP CER NP0 470P 5%	1
C159	J707438P7	CAP CER CL2 2N2 10%	1
C160	J707436P77	CAP CER NP0 470P 5%	1
C161	J707438P14	CAP CER CL2 10N 10%	1
C162	J707438P14	CAP CER CL2 10N 10%	1
C163	J707438P20	CAP CER CL2 33N 10%	1
C164	J707436P77	CAP CER NP0 470P 5%	1
C165	J707809P22	CAP CER NP0 56P 5%	1
C166	J707436P77	CAP CER NP0 470P 5%	1
C167	J707809P8	CAP CER NP0 3P9 .25P	1
C168	A700006P38	CAP MICA 150P 5 G1	1
C168	A700006P36	CAP MICA 120P 5 G2	1

Pos	Code No	Description	Qt
C169	J707438P14	CAP CER CL2 10N 10%	1
C170	A700006P30	CAP MICA 68P 5%	1
C172	J707438P14	CAP CER CL2 10N 10%	1
C173	J707436P77	CAP CER NP0 470P 5%	1
C174	J707438P7	CAP CER CL2 2N2 10%	1
C175	J707438P5	CAP CER CL2 1N 10%	1
C176	J707438P14	CAP CER CL2 10N 10%	1
C201	J707438P26	CAP CER CL2 100N 10%	1
C202	J707444P8	CAP TA SOL 22U 16V	1
C203	J707444P6	CAP TA SOL 4U7 35V	1
C204	J707436P77	CAP CER NP0 470P 5%	1
C205	J707412P9	CAP PYES 100N 10%	1
C301	J707436P3	CAP CER NP0 1P5 .25P	1
C302	J707438P5	CAP CER CL2 1N 10%	1
C304	J707436P7	CAP CER NP0 3P3 .25 G1	1
C304	J707436P3	CAP CER NP0 1P5 .25 G2	1
C305	J707436P12	CAP CER NP0 8P2 .25P	1
C306	J707483P5	CAP PHEN 0P68 5 G1	1
C306	J707483P1	CAP PHEN 0P47 5 G2	1
C307	J707438P5	CAP CER CL2 1N 10%	1
C309	J707436P12	CAP CER NP0 8P2 .25P	1
C310	J707438P5	CAP CER CL2 1N 10%	1
C311	J707438P5	CAP CER CL2 1N 10%	1
C312	J707436P87	CAP CER NP0 1N2 5%	1
C314	J707436P7	CAP CER NP0 3P3 .25 G1	1
C314	J707436P3	CAP CER NP0 1P5 .25 G2	1
C315	J707438P5	CAP CER CL2 1N 10%	1
C316	J707436P5	CAP CER NP0 2P2 .25 G1	1
C316	J707436P4	CAP CER NP0 1P8 .25 G2	1
C317	J707444P2	CAP TA SOL 0U22 35V	1
C318	J707438P5	CAP CER CL2 1N 10%	1
C319	J707436P12	CAP CER NP0 8P2 .25P	1
C320	J707438P5	CAP CER CL2 1N 10%	1
C322	J707483P7	CAP PHEN 1P00 5 G1	1
C322	J707483P6	CAP PHEN 0P82 5 G2	1
C323	J707483P4	CAP PHEN 0P56 5%	1
C324	J707436P4	CAP CER NP0 1P8 .25 G1	1
C324	J707436P3	CAP CER NP0 1P5 .25 G2	1
C325	J707438P5	CAP CER CL2 1N 10%	1
C326	J707436P12	CAP CER NP0 8P2 .25P	1
C328	J707436P12	CAP CER NP0 8P2 .25P	1
C331	J707436P12	CAP CER NP0 8P2 .25P	1
C332	J707436P12	CAP CER NP0 8P2 .25P	1
C333	J707436P5	CAP CER NP0 2P2 .25 G1	1
C333	J707436P4	CAP CER NP0 1P8 .25 G2	1
C335	J707438P5	CAP CER CL2 1N 10%	1
C338	J707436P11	CAP CER NP0 6P8 .25P	1
C339	J707438P5	CAP CER CL2 1N 10%	1
C340	J707438P8	CAP CER CL2 3N3 10%	1
C345	J707436P37	CAP CER NP0 33P 5%	1
C347	J707438P5	CAP CER CL2 1N 10%	1
C348	J707438P5	CAP CER CL2 1N 10%	1
C350	J707436P3	CAP CER NP0 1P5 .25 G1	1
C350	J707436P1	CAP CER NP0 1P0 .25 G2	1
C351	J707436P10	CAP CER NP0 5P6 .25 G1	1
C351	J707436P9	CAP CER NP0 4P7 .25 G2	1
C353	J707483P2	CAP PHEN 0P33 5%	1
C354	J707436P10	CAP CER NP0 5P6 .25 G1	1
C354	J707436P9	CAP CER NP0 4P7 .25 G2	1
C355	J707483P7	CAP PHEN 1P00 5 G1	1
C355	J707483P13	CAP PHEN 0P22 10 G2	1
C356	J707438P5	CAP CER CL2 1N 10%	1
C357	J707436P1	CAP CER NP0 1P0 .25P	1
C358	J707436P1	CAP CER NP0 1P0 .25P	1
C401	J707438P8	CAP CER CL2 3N3 10%	1
C402	J707438P8	CAP CER CL2 3N3 10%	1
C403	J707438P8	CAP CER CL2 3N3 10%	1
C404	J707436P9	CAP CER NP0 4P7 .25P	1
C405	J707438P26	CAP CER CL2 100N 10%	1
C406	J707436P10	CAP CER NP0 5P6 .25P	1
C407	J707436P9	CAP CER NP0 4P7 .25P	1
C408	J707438P5	CAP CER CL2 1N 10%	1
C409	J707438P8	CAP CER CL2 3N3 10%	1
C410	J707444P8	CAP TA SOL 22U 16V	1
C411	J707438P26	CAP CER CL2 100N 10%	1
C412	J707438P26	CAP CER CL2 100N 10%	1
C413	J707436P21	CAP CER NP0 15P 5%	1
C414	J707438P8	CAP CER CL2 3N3 10%	1
C415	J707438P8	CAP CER CL2 3N3 10%	1
C416	J708702P16	CAP CER N750 18P 5%	1
C417	J707436P49	CAP CER NP0 56P 5%	1
C418	J707438P14	CAP CER CL2 10N 10%	1
C419	J707438P26	CAP CER CL2 100N 10%	1

DATE: 9/29/1988

Pos	Code No	Description	Qt
C420	J707438P14	CAP CER CL2 10N 10%	1
C421	J707438P26	CAP CER CL2 100N 10%	1
C422	J707438P26	CAP CER CL2 100N 10%	1
C423	J707436P13	CAP CER NPO 10P 5%	1
C424	J707438P8	CAP CER CL2 3N3 10%	1
C425	J707412P13	CAP PYES 470N 10%	1
C426	J707436P93	CAP CER NPO 2N2 5%	1
C427	J707436P73	CAP CER NPO 330P 5%	1
C428	J707436P69	CAP CER NPO 220P 5%	1
C429	J707438P14	CAP CER CL2 10N 10%	1
C430	J707444P8	CAP TA SOL 22U 16V	1
C431	J707444P8	CAP TA SOL 22U 16V	1
C432	J707438P26	CAP CER CL2 100N 10%	1
C433	J707438P26	CAP CER CL2 100N 10%	1
C434	J707438P8	CAP CER CL2 3N3 10%	1
C435	J707436P1	CAP CER NPO 1P0 .25P	1
C436	J707438P26	CAP CER CL2 100N 10%	1
C501	J707412P11	CAP PYES 220N 10%	1
C502	J707412P11	CAP PYES 220N 10%	1
C503	J707412P11	CAP PYES 220N 10%	1
C504	A700235P4	CAP CER N150 1P8 .25P	1
C505	A700235P4	CAP CER N150 1P8 .25 G1	1
C505	A700235P8	CAP CER N150 3P9 .25 G2	1
C506	A700235P8	CAP CER N150 3P9 .25 G1	1
C506	A700235P7	CAP CER N150 3P3 .25 G2	1
C507	A700235P8	CAP CER N150 3P9 .25 G1	1
C507	A700235P9	CAP CER N150 4P7 .25 G2	1
C508	A700235P12	CAP CER N150 8P2 .25 G1	1
C508	A700235P10	CAP CER N150 5P6 .25 G2	1
C509	A700235P32	CAP CER N150 11P 5 G1	1
C509	A700235P9	CAP CER N150 4P7 5 G2	1
C510	A700235P12	CAP CER N150 8P2 .25 G1	1
C510	A700235P11	CAP CER N150 6P8 .25 G2	1
C512	J707483P7	CAP PHEN 1P00 5%	1
C513	J707438P3	CAP CER CL2 470P 10%	1
C515	J707436P9	CAP CER NPO 4P7 .25P	1
C516	J707436P7	CAP CER NPO 3P3 .25P	1
C517	J707444P6	CAP TA SOL 4U7 35V	1
C518	J707436P6	CAP CER NPO 2P7 .25 G1	1
C518	J707436P5	CAP CER NPO 2P2 .25 G2	1
C519	J707438P3	CAP CER CL2 470P 10%	1
C520	J707436P6	CAP CER NPO 2P7 .25 G1	1
C520	J707436P5	CAP CER NPO 2P2 .25 G2	1
C521	J707436P11	CAP CER NPO 6P8 .25P	1
C522	J707438P3	CAP CER CL2 470P 10%	1
C523	J707436P2	CAP CER NPO 1P2 .25 G1	1
C523	J707436P1	CAP CER NPO 1P0 .25 G2	1
C524	J707438P3	CAP CER CL2 470P 10%	1
C525	J707438P3	CAP CER CL2 470P 10%	1
C526	J707438P3	CAP CER CL2 470P 10%	1
C527	J707438P3	CAP CER CL2 470P 10%	1
C528	J707438P3	CAP CER CL2 470P 10%	1
C540	J707438P3	CAP CER CL2 470P 10%	1
C541	J707438P3	CAP CER CL2 470P 10%	1
C542	J707438P3	CAP CER CL2 470P 10%	1
C543	J707438P3	CAP CER CL2 470P 10%	1
C544	J707438P3	CAP CER CL2 470P 10%	1
C545	J707438P3	CAP CER CL2 470P 10%	1
C601	J707412P11	CAP PYES 220N 10%	1
C602	J707412P11	CAP PYES 220N 10%	1
C603	J707412P11	CAP PYES 220N 10%	1
C604	A700235P2	CAP CER NPO 1P2 .25P	1
C605	A700235P1	CAP CER NPO 1P0 .25 G2	1
C606	A700235P6	CAP CER N150 2P7 .25 G1	1
C606	A700235P4	CAP CER N150 1P8 .25 G2	1
C607	A700235P9	CAP CER N150 4P7 .25 G1	1
C607	A700235P6	CAP CER N150 2P7 .25 G2	1
C608	A700235P8	CAP CER N150 3P9 .25 G1	1
C608	A700235P7	CAP CER N150 3P3 .25 G2	1
C609	A700235P7	CAP CER N150 3P3 .25P	1
C610	A700235P10	CAP CER N150 5P6 .25 G1	1
C610	A700235P8	CAP CER N150 3P9 .25 G2	1
C611	J707436P7	CAP CER NPO 3P3 .25P	1
C612	J707436P9	CAP CER NPO 4P7 .25P	1
C613	J707444P6	CAP TA SOL 4U7 35V	1
C614	J707436P1	CAP CER NPO 1P0 .25P	1
C615	J707436P77	CAP CER NPO 470P 5%	1
C616	J707438P3	CAP CER CL2 470P 10%	1
C617	J707436P1	CAP CER NPO 1P0 .25P	1
C618	J707436P10	CAP CER NPO 5P6 .25P	1
C619	J707438P3	CAP CER CL2 470P 10%	1
C620	J707436P5	CAP CER NPO 2P2 .25P	1
C621	J707438P3	CAP CER CL2 470P 10%	1

Pos	Code No	Description	Qt
C624	J707436P69	CAP CER NPO 220P 5%	1
C625	J707438P26	CAP CER CL2 100N 10%	1
C626	J707438P5	CAP CER CL2 1N 10%	1
C627	J707438P14	CAP CER CL2 10N 10%	1
C628	J707436P89	CAP CER NPO 1N5 5%	1
C629	J707436P65	CAP CER NPO 150P 5%	1
C630	J707436P69	CAP CER NPO 220P 5%	1
C631	J707436P69	CAP CER NPO 220P 5%	1
C632	J707438P26	CAP CER CL2 100N 10%	1
C633	J707444P17	CAP TA SOL 47U 10V	1
C634	J707438P26	CAP CER CL2 100N 10%	1
C635	J707438P3	CAP CER CL2 470P 10%	1
C636	J707444P17	CAP TA SOL 47U 10V	1
C637	J707438P26	CAP CER CL2 100N 10%	1
C639	J707438P8	CAP CER CL2 3N3 10%	1
C640	J707412P9	CAP PYES 100N 10%	1
C641	J707412P13	CAP PYES 470N 10%	1
C642	J707412P13	CAP PYES 470N 10%	1
C643	J707438P22	CAP CER CL2 47N 10%	1
C644	J707436P6	CAP CER NPO 2P7 .25P	1
C652	J707438P5	CAP CER CL2 1N 10%	1
C653	J707444P6	CAP TA SOL 4U7 35V	1
C656	J707436P77	CAP CER NPO 470P 5%	1
C657	J707438P3	CAP CER CL2 470P 10%	1
C659	J707438P5	CAP CER CL2 1N 10%	1
C660	J707438P12	CAP CER CL2 6N8 5%	1
C665	J707438P3	CAP CER CL2 470P 10%	1
C666	J707438P3	CAP CER CL2 470P 10%	1
C667	J707438P3	CAP CER CL2 470P 10%	1
C668	J707436P61	CAP CER NPO 100P 5%	1
C701	J707436P29	CAP CER NPO 22P 5%	1
C702	J708702P22	CAP CER N750 56P 5%	1
C703	J707436P69	CAP CER NPO 220P 5%	1
C704	J707436P13	CAP CER NPO 10P 5%	1
C705	J707438P5	CAP CER CL2 1N 10%	1
C706	J707438P14	CAP CER CL2 10N 10%	1
C707	J707436P10	CAP CER NPO 5P6 .25P	1
C708	J707438P14	CAP CER CL2 10N 10%	1
C709	J707438P14	CAP CER CL2 10N 10%	1
D100	A700047P3	DIO SI SIG 1N6263	1
D101	J706892P1	DIO SI PIN UM 9401	1
D102	J706892P1	DIO SI PIN UM 9401	1
D103	J707390P1	DIO SI SIG BAV 74	1
D300	J709100P2	DIO SI CAP BB 909B	1
D301	J709100P2	DIO SI CAP BB 909B	1
D302	J709100P2	DIO SI CAP BB 909B	1
D303	J709100P2	DIO SI CAP BB 909B	1
D304	J709100P2	DIO SI CAP BB 909B	1
D305	J709100P2	DIO SI CAP BB 909B	1
D306	J706007P1	DIO SI CAP BB 505B	1
D307	J706007P1	DIO SI CAP BB 505B	1
D401	A700025P8	DIO SI ZENR 6V8 5% 0.4W	1
D501	J706007P1	DIO SI CAP BB 505B	1
D502	J706007P1	DIO SI CAP BB 505B	1
D503	J706007P1	DIO SI CAP BB 505B	1
D504	J706007P1	DIO SI CAP BB 505B	
D505	J707769P2	DIO SI CAP BBY 31	
D601	J706007P1	DIO SI CAP BB 505B	1
D602	J706007P1	DIO SI CAP BB 505B	1
D603	J706007P1	DIO SI CAP BB 505B	1
D604	J706007P1	DIO SI CAP BB 505B	1
D605	J707389P1	DIO SI SIG BAV 99	1
D606	J708681P1	DIO SI SIG BAW 56	1
D607	J707390P1	DIO SI SIG BAV 74	1
D608	J707390P1	DIO SI SIG BAV 74	1
D610	J708681P1	DIO SI SIG BAW 56	1
D701	J707928P2	DIO SI CAP BB 809	1
D702	J707390P1	DIO SI SIG BAV 74	1
L100	A700024P1	COIL RF FIX 0.1UH 10%	1
L101	A700024P1	COIL RF FIX 0.1UH 10%	1
L102	K805653G4	COIL ASM 4 1/2T	1
L103	J707339G1	COIL FIX ASM	1
L104	A700024P1	COIL RF FIX 0.1UH 10%	1
L105	K805653G2	COIL ASM 2 1/2T	1
L106	J707256P1	COIL FIX	1
L107	J707339G1	COIL FIX ASM	1
L108	K805653G4	COIL ASM 4 1/2T G1	1
L108	K805653G2	COIL ASM 2 1/2T G2	1
L109	J707339G1	COIL FIX ASM	1
L110	J707256P3	COIL FIX	1
L112	J707339G1	COIL FIX ASM	1
L113	A700024P1	COIL RF FIX 0.1UH 10 G1	1
L113	A700024P13	COIL RF FIX 1.0UH 10 G2	

Pos	Code No	Description	Qt
L114	K8^5653G2	COIL ASM 2 1/2T G1	1
L114	K805653G4	COIL ASM 4 1/2T G2	1
L115	J709287P1	CORE TOR FERR	1
L116	J709287P1	CORE TOR FERR	1
L117	J709603P1	COIL	1
L118	J707339G1	COIL FIX ASM	1
L119	J709603P1	COIL	1
L120	J709603P1	COIL	1
L121	A700024P10	COIL RF FIX 0.56UH 10%	1
L122	A700024P25	COIL RF FIX 10UH 10%	1
L123	A700024P25	COIL RF FIX 10UH 10%	1
L124	K805653G5	COIL ASM 5 1/2T	1
L125	K805653G6	COIL ASM 6 1/2T	1
L126	K805653G3	COIL ASM 3 1/2T G1	1
L126	K805653G4	COIL ASM 4 1/2T G2	1
L127	A700024P25	COIL RF FIX 10UH 10%	1
L128	A700024P25	COIL RF FIX 10UH 10%	1
L129	A700024P10	COIL RF FIX 0.56UH 10%	1
L130	J707256P1	COIL FIX	1
L301	J709099P3	COIL RF VAR 3-1/2T TAP	1
L302	J709099P3	COIL RF VAR 3-1/2T TAP	1
L303	J707486P17	COIL RF FIX 0.39UH 10%	1
L304	J709099P4	COIL RF VAR 3-1/2T TAP	1
L305	J707486P2	COIL RF FIX 3.3UH 10%	1
L306	J709099P5	COIL RF VAR 3-1/2T TAP	1
L308	J709099P3	COIL RF VAR 3-1/2T TAP	1
L310	J709099P4	COIL RF VAR 3-1/2T TAP	1
L312	J708428P2	COIL RF VAR 45 MHZ	1
L313	J709099P4	COIL RF VAR 3-1/2T TAP	1
L314	J709099P3	COIL RF VAR 3-1/2T TAP	1
L401	J707486P10	COIL RF FIX 1.5UH 10%	1
L403	K805570G2	COIL ASM	1
L404	K805570G1	COIL ASM	1
L405	J708428P1	COIL RF VAR 45 MHZ	1
L406	K805570G3	COIL ASM	1
L407	A700024P25	COIL RF FIX 10UH 10%	1
L408	J708428P2	COIL RF VAR 45 MHZ	1
L409	J707431P1	COIL RF VAR 455KHZ 25%	1
L410	J707431P1	COIL RF VAR 455KHZ 25%	1
L501	A700024P13	COIL RF FIX 1.0UH 10%	1
L502	A700024P13	COIL RF FIX 1.0UH 10%	1
L503	A700024P13	COIL RF FIX 1.0UH 10%	1
L504	A700024P13	COIL RF FIX 1.0UH 10%	1
L505	L855671P1	COIL RADIO FREQUENCY	1
L506	A700024P13	COIL RF FIX 1.0UH 10%	1
L507	A700024P13	COIL RF FIX 1.0UH 10%	1
L508	A700024P1	COIL RF FIX 0.1UH 10%	1
L601	A700024P13	COIL RF FIX 1.0UH 10%	1
L602	A700024P13	COIL RF FIX 1.0UH 10%	1
L603	A700024P13	COIL RF FIX 1.0UH 10%	1
L604	A700024P13	COIL RF FIX 1.0UH 10%	1
L605	L855671P1	COIL RADIO FREQUENCY	1
L606	A700024P13	COIL RF FIX 1.0UH 10%	1
L607	A700024P13	COIL RF FIX 1.0UH 10%	1
L608	A700024P2	COIL RF FIX 0.12UH 10%	1
L609	K805653G10	COIL RF FIXED 10 1/2T G1	1
L609	K805653G6	COIL RF FIXED 6 1/2T G2	1
L701	K805570G4	COIL ASM	1
L702	A700024P43	COIL RF FIX 330UH 10%	1
L703	A700024P27	COIL RF FIX 15UH 10%	1
P102	J707064P112	CONN PWB FEM 12-CKT	1
P105	A701883P4	CONN PWB FEM RECP	1
Q100	J707388P1	TSTR NPN SI BFR 53	1
Q101	J707388P1	TSTR NPN SI BFR 53	1
Q102	A701940P1	TSTR NPN SI RF-PWR 0.4W	1
Q103	A700066P2	TSTR NPN SI RF-PWR 2.0W	1
Q104	J709163P1	TSTR NPN SI RF-PWR 10W	1
Q105	J709162P2	TSTR NPN SI RF-PWR 27W	1
Q106	J707432P1	TSTR PNP SI BCX 18	1
Q107	J707386P1	TSTR NPN SI BCW 32	1
Q108	J708406P1	TSTR NPN SI BD 233	1
Q109	J707386P1	TSTR NPN SI BCW 32	1
Q201	J707435P1	TSTR PNP SI BC 369	1
Q202	J707386P1	TSTR NPN SI BCW 32	1
Q203	J707432P1	TSTR PNP SI BCX 18	1
Q204	J707386P1	TSTR NPN SI BCW 32	1
Q301	J706011P2	TSTR NPN SI BFR 91A	1
Q302	J708315P1	TSTR JFET SI 2N5245	1
Q401	J707817P1	TSTR JFET SI J 309	1
Q402	J707817P1	TSTR JFET SI J 309	1
Q403	J707419P1	TSTR JFET SI BF511	1
Q404	J708418P1	TSTR NPN SI BFS 20	1
Q405	J708418P1	TSTR NPN SI BFS 20	1

Pos	Code No	Description	Qt
Q406	J708418P1	TSTR NPN SI BFS 20	1
Q407	J707386P1	TSTR NPN SI BCW 32	1
Q408	J707387P1	TSTR PNP SI BCW 30	1
Q501	J707817P1	TSTR JFET SI J 309	1
Q502	J707388P1	TSTR NPN SI BFR 53	1
Q601	J707817P1	TSTR JFET SI J 309	1
Q602	J707388P1	TSTR NPN SI BFR 53	1
Q603	J708318P1	TSTR PNP SI BFT 92	1
Q604	J707433P1	TSTR MFET SI BF 989	1
Q605	J707386P1	TSTR NPN SI BCW 32	1
Q612	J707386P1	TSTR NPN SI BCW 32	1
Q613	J707386P1	TSTR NPN SI BCW 32	1
Q701	J707419P1	TSTR JFET SI BF511	1
Q702	J707387P1	TSTR PNP SI BCW 30	1
R100	J707385P122	RES MFLM 1/8W 1K2 5%	1
R101	J707385P472	RES MFLM 1/8W 4K7 5%	1
R102	J707385P270	RES MFLM 1/8W 27R 5%	1
R103	J707385P470	RES MFLM 1/8W 47R 5%	1
R104	J707385P102	RES MFLM 1/8W 1K0 5%	1
R105	J707385P182	RES MFLM 1/8W 1K8 5%	1
R106	J707385P470	RES MFLM 1/8W 47R 5%	1
R107	J707385P680	RES MFLM 1/8W 68R 5%	1
R108	J707385P560	RES MFLM 1/8W 56R 5%	1
R109	J707385P100	RES MFLM 1/8W 10R 5%	1
R110	J707385P100	RES MFLM 1/8W 10R 5%	1
R111	J707385P100	RES MFLM 1/8W 10R 5%	1
R112	J707385P100	RES MFLM 1/8W 10R 5%	1
R113	J707385P100	RES MFLM 1/8W 10R 5%	1
R114	J707385P947	RES MFLM 1/8W 4R7 20%	1
R115	J707385P100	RES MFLM 1/8W 10R 5%	1
R116	J707385P220	RES MFLM 1/8W 22R 5%	1
R117	J707385P220	RES MFLM 1/8W 22R 5%	1
R118	J707385P473	RES MFLM 1/8W 47K 5%	1
R119	J707385P820	RES MFLM 1/8W 82R 5%	1
R120	J707385P820	RES MFLM 1/8W 82R 5%	1
R121	J707385P333	RES MFLM 1/8W 33K 5%	1
R122	J707385P221	RES MFLM 1/8W 220R 5%	1
R123	J707385P221	RES MFLM 1/8W 220R 5%	1
R132	J708538P9	RES VAR CERM 200K 20%	1
R133	J708538P4	RES VAR CERM 5K0 20%	1
R134	J707385P100	RES MFLM 1/8W 10R 5%	1
R135	J706147P2	RES THERM PTC 80R 25%	1
R136	J707385P682	RES MFLM 1/8W 6K8 5%	1
R137	J707385P223	RES MFLM 1/8W 22K 5%	1
R138	J707385P472	RES MFLM 1/8W 4K7 5%	1
R139	J707385P472	RES MFLM 1/8W 4K7 5%	1
R140	J707385P333	RES MFLM 1/8W 33K 5%	1
R141	J707385P333	RES MFLM 1/8W 33K 5%	1
R142	J707385P104	RES MFLM 1/8W 100K 5%	1
R143	J707385P222	RES MFLM 1/8W 2K2 5%	1
R144	J707385P222	RES MFLM 1/8W 2K2 5%	1
R145	J707385P223	RES MFLM 1/8W 22K 5%	1
R146	J707385P104	RES MFLM 1/8W 100K 5%	1
R147	J707385P104	RES MFLM 1/8W 100K 5%	1
R148	J707385P123	RES MFLM 1/8W 12K 5%	1
R149	J707385P472	RES MFLM 1/8W 4K7 5%	1
R150	J707385P391	RES MFLM 1/8W 390R 5%	1
R151	J707385P683	RES MFLM 1/8W 68K 5%	1
R152	J707385P104	RES MFLM 1/8W 100K 5%	1
R153	J707385P472	RES MFLM 1/8W 4K7 5%	1
R154	J707385P274	RES MFLM 1/8W 270K 5%	1
R155	J707385P682	RES MFLM 1/8W 6K8 5%	1
R156	J707385P102	RES MFLM 1/8W 1K0 5%	1
R157	J707385P392	RES MFLM 1/8W 3K9 5%	1
R158	J707385P472	RES MFLM 1/8W 4K7 5%	1
R159	J707385P104	RES MFLM 1/8W 100K 5%	1
R160	J709725P1	RES THERM PTC 1K0	1
R161	J707385P271	RES MFLM 1/8W 270R 5%	1
R162	J707385P271	RES MFLM 1/8W 270R 5%	1
R163	J707385P471	RES MFLM 1/8W 470R 5%	1
R164	J707385P221	RES MFLM 1/8W 220R 5%	1
R165	J707385P221	RES MFLM 1/8W 220R 5%	1
R201	J707385P561	RES MFLM 1/8W 560R 5%	1
R202	J707385P271	RES MFLM 1/8W 270R 5%	1
R203	J707385P153	RES MFLM 1/8W 15K 5%	1
R204	J707385P153	RES MFLM 1/8W 15K 5%	1
R205	J707385P472	RES MFLM 1/8W 4K7 5%	1
R206	J707385P272	RES MFLM 1/8W 2K7 5%	1
R207	J707385P563	RES MFLM 1/8W 56K 5%	1
R208	J707385P563	RES MFLM 1/8W 56K 5%	1
R209	J707385P271	RES MFLM 1/8W 270R 5%	1
R301	J707385P102	RES MFLM 1/8W 1K0 5 G1	1
R301	J707385P182	RES MFLM 1/8W 1K8 5 G2	1

Pos	Code No	Description	Qt
R302	J707385P561	RES MFLM 1/8W 560R 5%	1
R303	J707385P104	RES MFLM 1/8W 100K 5%	1
R304	J707385P104	RES MFLM 1/8W 100K 5%	1
R305	J707385P900	RES MFLM 1/8W OR JUMPER	1
R306	J707385P222	RES MFLM 1/8W 2K2 5%	1
R307	J707385P681	RES MFLM 1/8W 680R 5%	1
R308	J707385P470	RES MFLM 1/8W 47R 5%	1
R309	J707385P270	RES MFLM 1/8W 27R 5%	1
R310	J707385P104	RES MFLM 1/8W 100K 5%	1
R311	J707385P560	RES MFLM 1/8W 56R 5%	1
R312	J707385P104	RES MFLM 1/8W 100K 5%	1
R314	J707385P104	RES MFLM 1/8W 100K 5%	1
R316	J707385P104	RES MFLM 1/8W 100K 5%	1
R317	J707385P182	RES MFLM 1/8W 1K8 5%	1
R318	J707385P100	RES MFLM 1/8W 10R 5%	1
R319	J707385P101	RES MFLM 1/8W 100R 5%	1
R321	J707385P270	RES MFLM 1/8W 27R 5%	1
R322	J707385P391	RES MFLM 1/8W 390R 5 G1	1
R322	J707385P471	RES MFLM 1/8W 470R 5 G2	1
R323	J707385P104	RES MFLM 1/8W 100K 5%	1
R324	J707385P104	RES MFLM 1/8W 100K 5%	1
R325	J707385P100	RES MFLM 1/8W 10R 5%	1
R326	J707385P392	RES MFLM 1/8W 3K9 5%	1
R327	J707385P102	RES MFLM 1/8W 1K0 5%	1
R401	J707385P560	RES MFLM 1/8W 56R 5%	1
R402	J707385P100	RES MFLM 1/8W 10R 5%	1
R403	J707385P332	RES MFLM 1/8W 3K3 5%	1
R405	J707385P100	RES MFLM 1/8W 10R 5%	1
R406	J707385P820	RES MFLM 1/8W 82R 5%	1
R407	J707385P470	RES MFLM 1/8W 47R 5%	1
R408	J707385P470	RES MFLM 1/8W 47R 5%	1
R410	J707385P272	RES MFLM 1/8W 2K7 5%	1
R411	J707385P682	RES MFLM 1/8W 6K8 5%	1
R412	J707385P272	RES MFLM 1/8W 2K7 5%	1
R413	J707385P821	RES MFLM 1/8W 820R 5%	1
R414	J707385P220	RES MFLM 1/8W 22R 5%	1
R415	J707385P222	RES MFLM 1/8W 2K2 5%	1
R416	J707385P562	RES MFLM 1/8W 5K6 5%	1
R417	J707385P103	RES MFLM 1/8W 10K 5%	1
R418	J707385P153	RES MFLM 1/8W 15K 5%	1
R419	J707385P182	RES MFLM 1/8W 1K8 5%	1
R420	J707385P182	RES MFLM 1/8W 1K8 5%	1
R421	J707385P182	RES MFLM 1/8W 1K8 5%	1
R422	J707385P473	RES MFLM 1/8W 47K 5%	1
R423	J707385P153	RES MFLM 1/8W 15K 5%	1
R424	J708538P5	RES VAR CERM 10K 20%	1
R425	J707385P272	RES MFLM 1/8W 2K7 5%	1
R426	J707385P473	RES MFLM 1/8W 47K 5%	1
R427	J707385P473	RES MFLM 1/8W 47K 5%	1
R428	J707385P563	RES MFLM 1/8W 56K 5%	1
R429	J707385P104	RES MFLM 1/8W 100K 5%	1
R430	J707385P334	RES MFLM 1/8W 330K 5%	1
R431	J707385P473	RES MFLM 1/8W 47K 5%	1
R432	J707385P473	RES MFLM 1/8W 47K 5%	1
R433	J707385P271	RES MFLM 1/8W 270R 5%	1
R434	J707385P102	RES MFLM 1/8W 1K0 5%	1
R435	J706147P3	RES THERM PTC 250R 25%	1
R436	J707385P392	RES MFLM 1/8W 3K9 5%	1
R437	J707406P7	RES THERM NTC 220R 10%	1
R438	J707385P222	RES MFLM 1/8W 2K2 5%	1
R439	J707385P392	RES MFLM 1/8W 3K9 5%	1
R440	J707385P392	RES MFLM 1/8W 3K9 5%	1
R441	J707385P101	RES MFLM 1/8W 100R 5%	1
R442	J708538P6	RES VAR CERM 20K 20%	1
R444	J707385P473	RES MFLM 1/8W 47K 5%	1
R445	J707385P273	RES MFLM 1/8W 27K 5%	1
R446	J707385P224	RES MFLM 1/8W 220K 5%	1
R447	J707385P392	RES MFLM 1/8W 3K9 5%	1
R448	J707385P101	RES MFLM 1/8W 100R 5%	1
R449	J707385P470	RES MFLM 1/8W 47R 5%	1
R450	J707385P103	RES MFLM 1/8W 10K 5%	1
R451	J707385P332	RES MFLM 1/8W 3K3 5%	1
R452	J707385P332	RES MFLM 1/8W 3K3 5%	1
R501	J707385P122	RES MFLM 1/8W 1K2 5%	1
R502	J707385P122	RES MFLM 1/8W 1K2 5%	1
R503	J707385P122	RES MFLM 1/8W 1K2 5%	1
R504	J707385P104	RES MFLM 1/8W 100K 5%	1
R505	J707385P104	RES MFLM 1/8W 100K 5%	1
R506	J707385P104	RES MFLM 1/8W 100K 5%	1
R508	J707385P103	RES MFLM 1/8W 10K 5%	1
R509	J707385P910	RES MFLM 1/8W 1R0 20%	1
R510	J707385P332	RES MFLM 1/8W 3K3 5%	1
R512	J707385P561	RES MFLM 1/8W 560R 5%	1

Pos	Code No	Description	Qt
R513	J707385P183	RES MFLM 1/8W 18K 5%	1
R514	J707385P472	RES MFLM 1/8W 4K7 5%	1
R515	J707385P470	RES MFLM 1/8W 47R 5%	1
R517	J707385P101	RES MFLM 1/8W 100R 5%	1
R518	J707385P470	RES MFLM 1/8W 47R 5%	1
R519	J707385P470	RES MFLM 1/8W 47R 5%	1
R529	J707385P392	RES MFLM 1/8W 3K9 5%	1
R601	J707385P122	RES MFLM 1/8W 1K2 5%	1
R602	J707385P122	RES MFLM 1/8W 1K2 5%	1
R603	J707385P122	RES MFLM 1/8W 1K2 5%	1
R604	J707385P104	RES MFLM 1/8W 100K 5%	1
R605	J707385P104	RES MFLM 1/8W 100K 5%	1
R606	J707385P104	RES MFLM 1/8W 100K 5%	1
R607	J707385P561	RES MFLM 1/8W 560R 5%	1
R608	J707385P221	RES MFLM 1/8W 220R 5%	1
R609	J707385P472	RES MFLM 1/8W 4K7 5%	1
R610	J707385P183	RES MFLM 1/8W 18K 5%	1
R611	J707385P271	RES MFLM 1/8W 270R 5%	1
R612	J707385P102	RES MFLM 1/8W 1K0 5%	1
R613	J707385P101	RES MFLM 1/8W 100R 5%	1
R614	J707385P561	RES MFLM 1/8W 560R 5%	1
R615	J707385P272	RES MFLM 1/8W 2K7 5%	1
R616	J707385P470	RES MFLM 1/8W 47R 5%	1
R617	J707385P683	RES MFLM 1/8W 68K 5%	1
R618	J707385P683	RES MFLM 1/8W 68K 5%	1
R619	J707385P104	RES MFLM 1/8W 100K 5%	1
R620	J707385P271	RES MFLM 1/8W 270R 5%	1
R621	J707385P561	RES MFLM 1/8W 560R 5%	1
R622	J707385P102	RES MFLM 1/8W 1K0 5%	1
R623	J707385P224	RES MFLM 1/8W 220K 5%	1
R624	J707385P223	RES MFLM 1/8W 22K 5%	1
R625	J707385P470	RES MFLM 1/8W 47R 5%	1
R626	J707385P100	RES MFLM 1/8W 10R 5%	1
R627	J707385P103	RES MFLM 1/8W 10K 5%	1
R628	J707385P224	RES MFLM 1/8W 220K 5%	1
R629	J707385P393	RES MFLM 1/8W 39K 5%	1
R630	J707385P100	RES MFLM 1/8W 10R 5%	1
R631	J707385P824	RES MFLM 1/8W 820K 5%	1
R632	J707385P223	RES MFLM 1/8W 22K 5%	1
R633	J707385P824	RES MFLM 1/8W 820K 5%	1
R634	J707385P123	RES MFLM 1/8W 12K 5%	1
R635	J707385P102	RES MFLM 1/8W 1K0 5%	1
R636	J707385P332	RES MFLM 1/8W 3K3 5%	1
R637	J707385P181	RES MFLM 1/8W 180R 5%	1
R638	J707385P154	RES MFLM 1/8W 150K 5%	1
R639	J707385P682	RES MFLM 1/8W 6K8 5%	1
R640	J707385P105	RES MFLM 1/8W 1M0 10%	1
R641	J707385P184	RES MFLM 1/8W 180K 5%	1
R642	J707385P184	RES MFLM 1/8W 180K 5%	1
R643	J707385P105	RES MFLM 1/8W 1M0 10%	1
R644	J707385P473	RES MFLM 1/8W 47K 5 G1	1
R644	J707385P563	RES MFLM 1/8W 56K 5 G2	1
R645	J707385P103	RES MFLM 1/8W 10K 5%	1
R646	J707385P562	RES MFLM 1/8W 5K6 5 G1	1
R646	J707385P472	RES MFLM 1/8W 4K7 5 G2	1
R647	J707385P333	RES MFLM 1/8W 33K 5%	1
R648	J707385P823	RES MFLM 1/8W 82K 5 G1	1
R648	J707385P683	RES MFLM 1/8W 68K 5 G2	1
R649	J707385P393	RES MFLM 1/8W 39K 5 G1	1
R649	J707385P563	RES MFLM 1/8W 56K 5 G2	1
R650	J707385P333	RES MFLM 1/8W 33K 5 G1	1
R650	J707385P273	RES MFLM 1/8W 27K 5 G2	1
R651	J707385P273	RES MFLM 1/8W 27K 5 G1	1
R651	J707385P183	RES MFLM 1/8W 18K 5 G2	1
R652	J707385P103	RES MFLM 1/8W 10K 5%	1
R653	J707385P333	RES MFLM 1/8W 33K 5%	1
R654	J707385P562	RES MFLM 1/8W 5K6 5%	1
R655	J707385P183	RES MFLM 1/8W 18K 5%	1
R656	J707385P393	RES MFLM 1/8W 39K 5%	1
R657	J707385P823	RES MFLM 1/8W 82K 5%	1
R658	J707385P154	RES MFLM 1/8W 150K 5%	1
R659	J707385P223	RES MFLM 1/8W 22K 5 G1	1
R659	J707385P153	RES MFLM 1/8W 15K 5 G2	1
R660	J707385P333	RES MFLM 1/8W 33K 5 G1	1
R660	J707385P273	RES MFLM 1/8W 27K 5 G2	1
R661	J707385P333	RES MFLM 1/8W 33K 5 G1	1
R661	J707385P273	RES MFLM 1/8W 27K 5 G2	1
R662	J707385P473	RES MFLM 1/8W 47K 5%	1
R663	J708538P6	RES VAR CERM 20K 20%	1
R664	J707385P683	RES MFLM 1/8W 68K 5 G1	1
R664	J707385P393	RES MFLM 1/8W 39K 5 G2	1
R665	J707385P824	RES MFLM 1/8W 820K 5%	1
R666	J707385P124	RES MFLM 1/8W 120K 5%	1

Pos	Code No	Description	Qt
R667	J707385P124	RES MFLM 1/8W 120K 5%	1
R668	J707385P122	RES MFLM 1/8W 1K2 5%	1
R669	J707385P221	RES MFLM 1/8W 220R 5%	1
R670	J707385P103	RES MFLM 1/8W 10K 5%	1
R671	J707385P562	RES MFLM 1/8W 5K6 5%	1
R672	J707385P822	RES MFLM 1/8W 8K2 5%	1
R673	J707385P822	RES MFLM 1/8W 8K2 5%	1
R674	J707385P101	RES MFLM 1/8W 100R 5%	1
R675	J708538P5	RES VAR CERM 10K 20%	1
R676	J707385P123	RES MFLM 1/8W 12K 5%	1
R677	J708538P5	RES VAR CERM 10K 20%	1
R678	J707385P470	RES MFLM 1/8W 47R 5%	1
R679	J707385P821	RES MFLM 1/8W 820R 5%	1
R680	J708538P5	RES VAR CERM 10K 20%	1
R681	J707385P223	RES MFLM 1/8W 22K 5%	1
R682	J707385P152	RES MFLM 1/8W 1K5 5%	1
R683	J707385P223	RES MFLM 1/8W 22K 5%	1
R684	J707385P183	RES MFLM 1/8W 18K 5%	1
R685	J707385P183	RES MFLM 1/8W 18K 5%	1
R686	J707385P103	RES MFLM 1/8W 10K 5%	1
R687	J707385P103	RES MFLM 1/8W 10K 5%	1
R689	J707385P105	RES MFLM 1/8W 1MO 10%	1
R690	J707385P124	RES MFLM 1/8W 120K 5%	1
R691	J707385P273	RES MFLM 1/8W 27K 5%	1
R692	J707385P223	RES MFLM 1/8W 22K 5%	1
R693	J707385P105	RES MFLM 1/8W 1MO 10%	1
R694	J707385P223	RES MFLM 1/8W 22K 5%	1
R695	J707385P105	RES MFLM 1/8W 1MO 10%	1
R696	J707385P223	RES MFLM 1/8W 22K 5%	1
R697	J707385P105	RES MFLM 1/8W 1MO 10%	1
R698	J707385P103	RES MFLM 1/8W 10K 5%	1
R701	J708666P1	RES THERM NTC 5K 2%	1
R702	A701250P413	RES MFLM 1/4W 133K 1%	1
R703	A701250P213	RES MFLM 1/4W 1K33 1%	1
R704	A701250P325	RES MFLM 1/4W 17K8 1%	1
R705	J708666P2	RES THERM NTC 20K 2%	1
R706	J708666P2	RES THERM NTC 20K 2%	1
R707	J707385P104	RES MFLM 1/8W 100K 5%	1
R708	J707385P105	RES MFLM 1/8W 1MO 10%	1
R709	J707385P181	RES MFLM 1/8W 180R 5%	1
R710	J707385P101	RES MFLM 1/8W 100R 5%	1
R711	J707385P223	RES MFLM 1/8W 22K 5%	1
R712	J707385P154	RES MFLM 1/8W 150K 5%	1
R713	J707385P821	RES MFLM 1/8W 820R 5%	1
R714	J707385P104	RES MFLM 1/8W 100K 5%	1
U100	J708165P2	IC LIN OP-AMP 324	1
U201	J708333P1	IC LIN VR FIX 4785	1
U401	J707449P1	IC LIN IF-AMP 3357	1
U402	M905766G2	INT CKT SQ 4003	1
U601	J707859P1	IC LIN OP-AMP 204	1
U602	J707859P1	IC LIN OP-AMP 204	1
U603	J707859P1	IC LIN OP-AMP 204	1
U604	J707859P1	IC LIN OP-AMP 204	1
U606	J707243P1	IC DIG REG 4094	1
U607	J707374P4	IC PLL PRESC 12018	1
U608	B800902P1	IC PLL SYN CUSTOM DES	1
U609	J707859P1	IC LIN OP-AMP 204	1
U610	J708503P2	IC LIN CMPAR LM 339	1
U615	J708621P2	CPLR OPTO PC 827	1
U616	J708503P2	IC LIN CMPAR LM 339	1
W001	A700184P1	RES WIRE JMPR OR JUMPER	1
W003	J707256P1	COIL FIX	1
W004	J707256P1	COIL FIX	1
W005	J708717P1	STRAP	1
W006	J708716P2	STRAP	1
W007	J708716P2	STRAP	1
W008	J708716P2	STRAP	1
W009	J708716P2	STRAP	1
Y401	J708426P2	CRYSTAL UNIT 45.4550MHZ	1
Y701	J707567P19	CRYSTAL UNIT 7.4000MHZ	1
Z401	J708330P3	FLTR CRY 45.0 +/-3.75KHZ	1
Z402	J707446P4	FLTR CER 455K +/- 4.5KHZ	1
Z403	J707446P4	FLTR CER 455K +/- 4.5KHZ	1
	M905903P1R2	BOARD PW	1

Pos	Code No	Description	Qt
		NON ELECTRONICAL PARTS	
	J708966G1	HEAT SINK MODF	1
	K805569G2	SHIELD METALLIZED	1
	J706281P6	CORE SCREW FERR U 10	8
	J708561P3	COIL FIXED	1
	J708561P3	COIL FIXED	1
	J708561P3	COIL FIXED	1
	J706804P3	WASH INS CRYS FOR HC-45/U	2
	J706804P2	WASH INS CRYS FOR HC-18/U	2

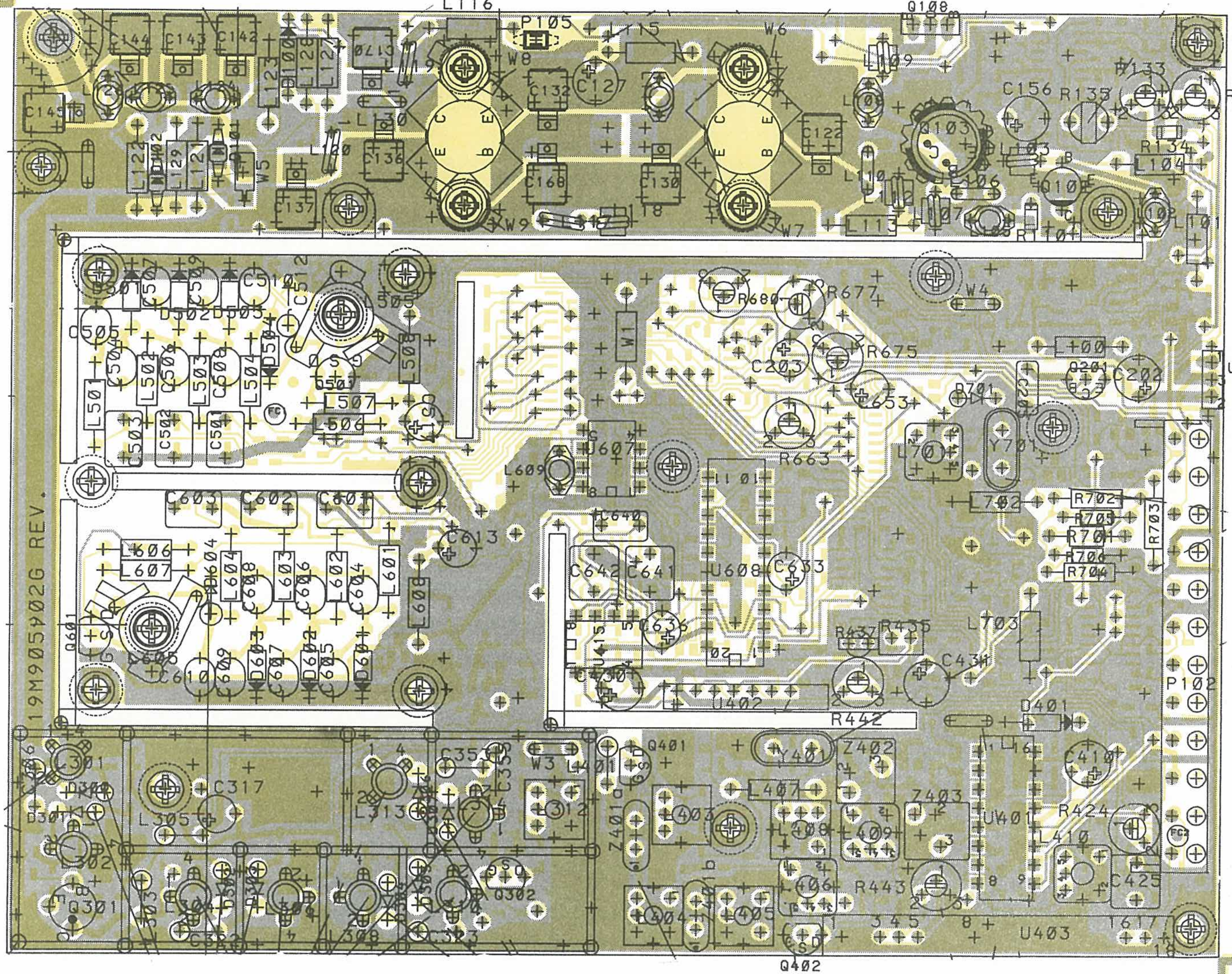

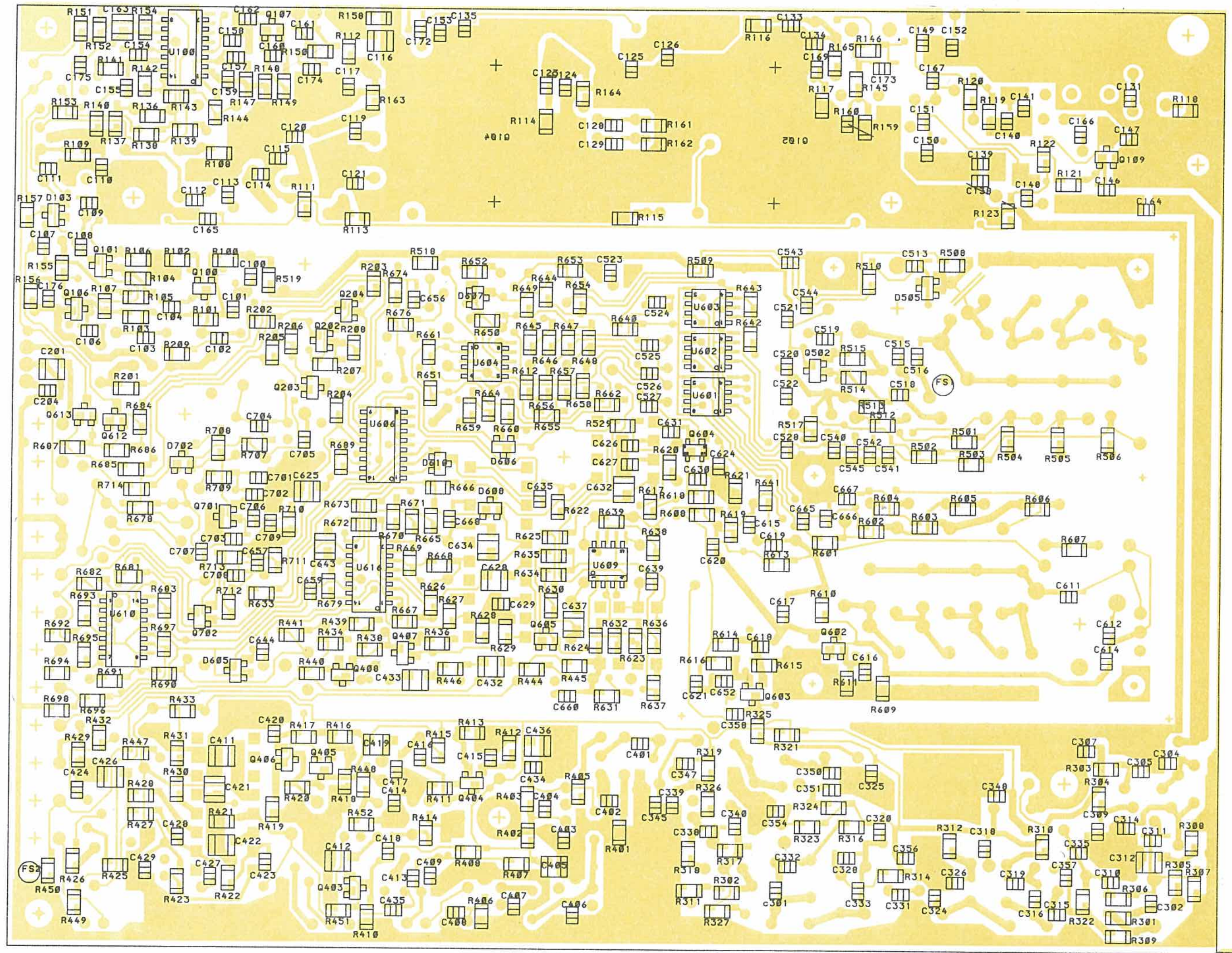

M905902G1 RF6774S25L
M905902G2 RF6774S25H

RADIO FREQUENCY - UNIT RF677X
COMPONENT LAYOUT

D404.197/2	REV. 2

Storno

Storno

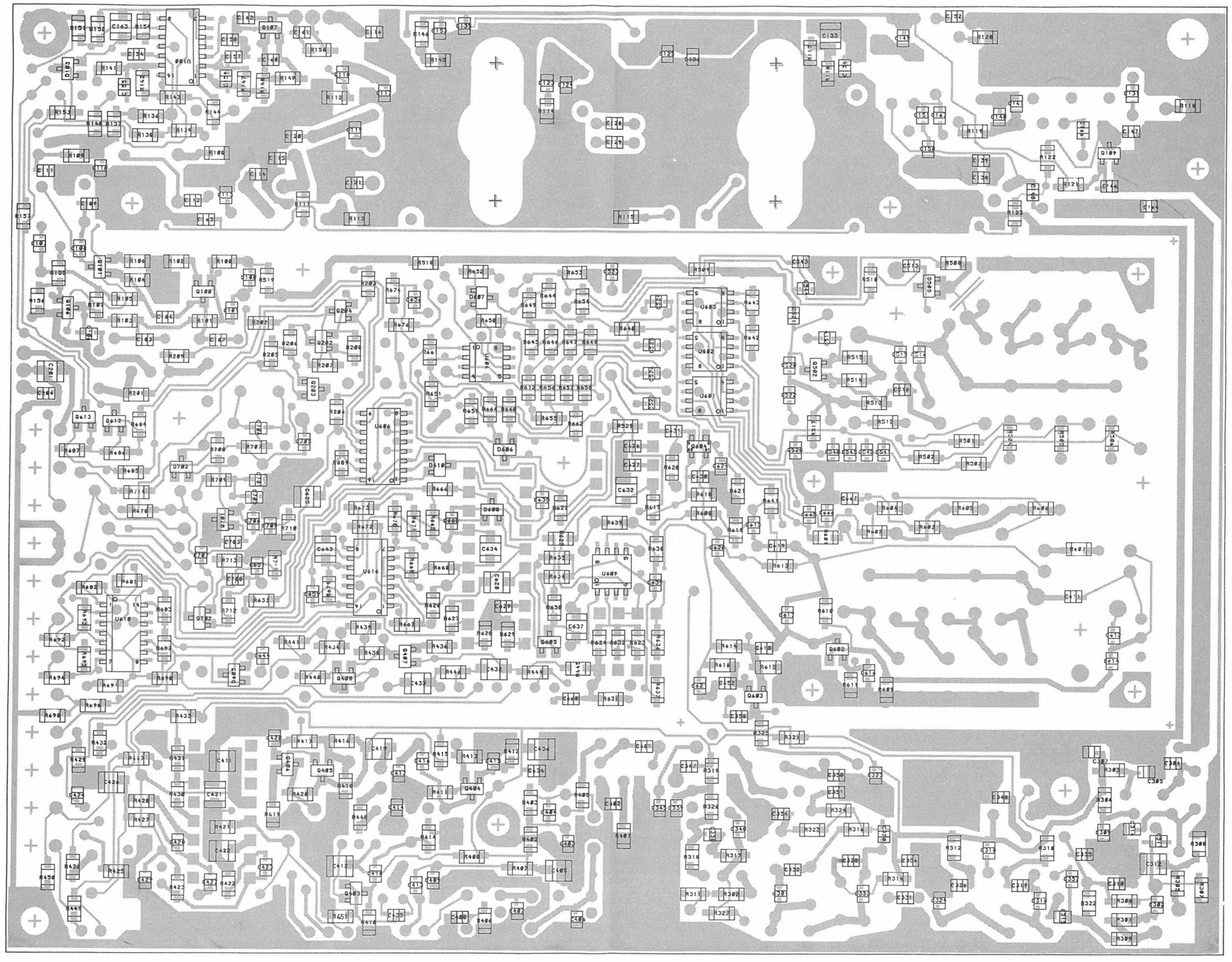

SIMPLEX

RADIO FREQUENCY-UNIT RF677X

COMPONENT LAYOUT-CHIP-SIDE

D404.198

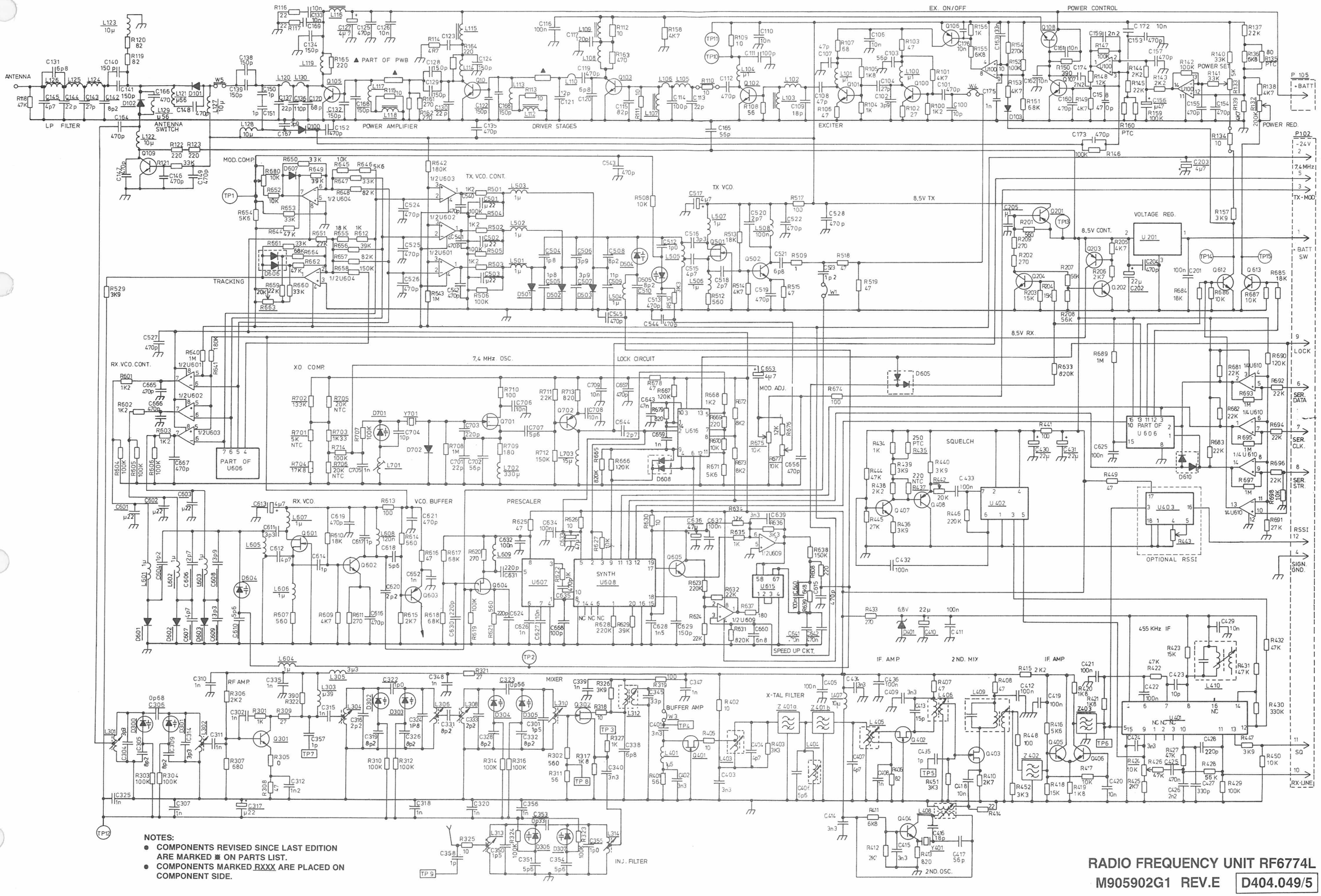

NOTES:

- **COMPONENTS REVISED SINCE LAST EDITION ARE MARKED ■ ON PARTS LIST.**
- **COMPONENTS MARKED RXXX ARE PLACED ON COMPONENT SIDE.**

RADIO FREQUENCY UNIT RF6774L

M905902G1 REV.E **D404.049/5**

ANTENNA
LP FILTER
ANTENNA SWITCH
POWER AMPLIFIER
DRIVER STAGES
EXCITER
EX. ON/OFF
POWER CONTROL
POWER SET
POWER RED.
PTC
+BATT
MOD. COMP
TX. VCO. CONT.
TX. VCO.
8,5V TX
VOLTAGE REG.
8,5V CONT.
TRACKING
RX VCO. CONT.
XO. COMP.
7,4 MHz. OSC.
LOCK CIRCUIT
MOD. ADJ.
8,5V RX.
SQUELCH
RX. VCO.
VCO. BUFFER
PRESCALER
SYNTH
SPEED UP CKT.
OPTIONAL RSSI
RF AMP
MIXER
BUFFER AMP
X-TAL FILTER
IF. AMP
2ND. MIX
455 KHz IF
2ND. OSC.
INJ. FILTER
P 105
P102
LOCK
SER. DATA
SER. CLK.
SER. STR.
RSSI
SIGN. GND.
SQ
RX-LINE
TX-MOD

NOTES:
- COMPONENTS REVISED SINCE LAST EDITION ARE MARKED ■ ON PARTS LIST.
- COMPONENTS MARKED RXXX ARE PLACED ON COMPONENT SIDE.

RADIO FREQUENCY UNIT RF6774L

M905902G1 REV.E **D404.049/5**

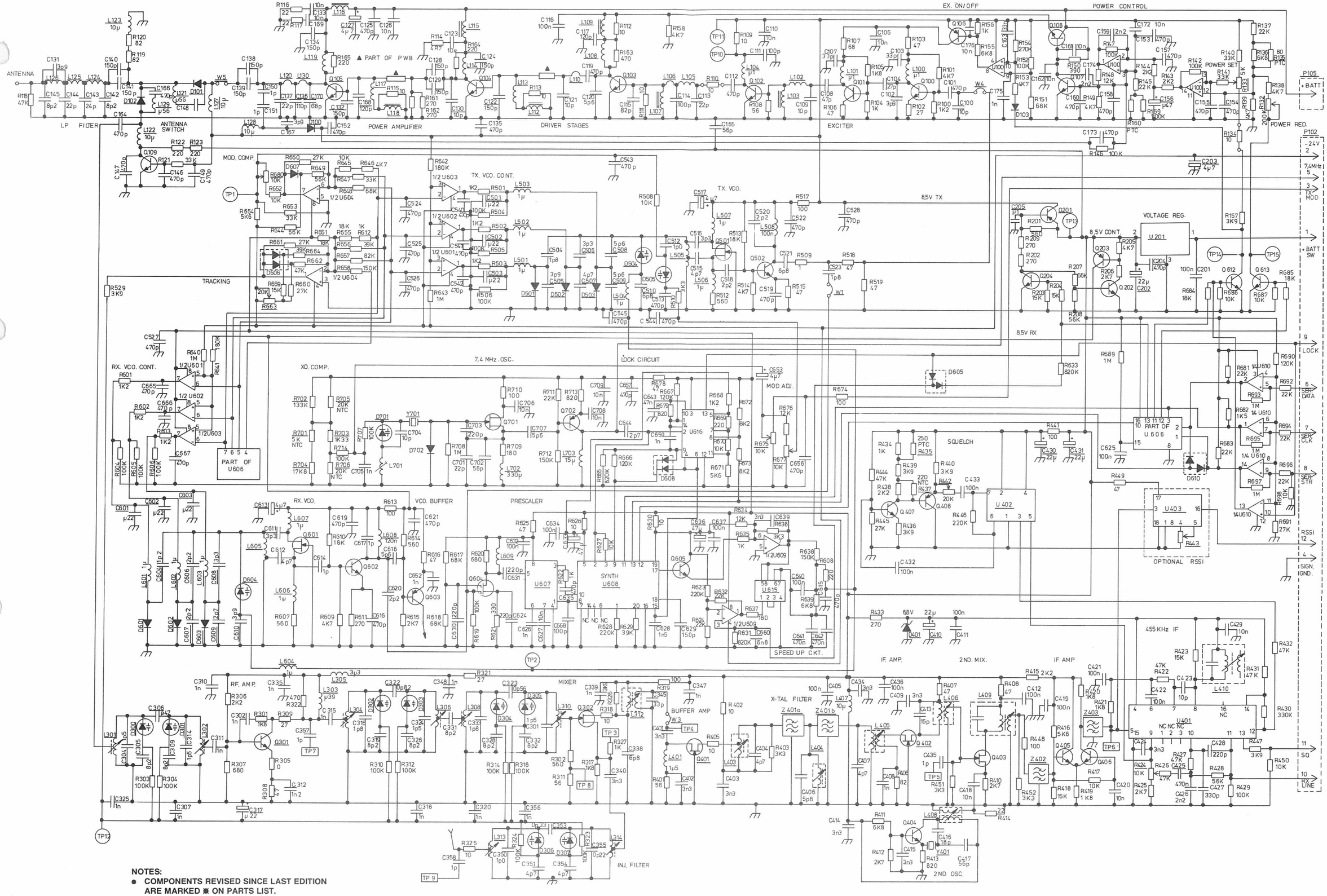

NOTES:

- **COMPONENTS REVISED SINCE LAST EDITION ARE MARKED ◙ ON PARTS LIST.**
- **COMPONENTS MARKED RXXX ARE PLACED ON COMPONENT SIDE.**

RADIO FREQAUENCY UNIT RF6774H

M905902G2 REV.H **D404.050/5**

Storno

Storno

RADIO FREQUENCY UNIT RF6774L

D404.049/3

Storno

Storno

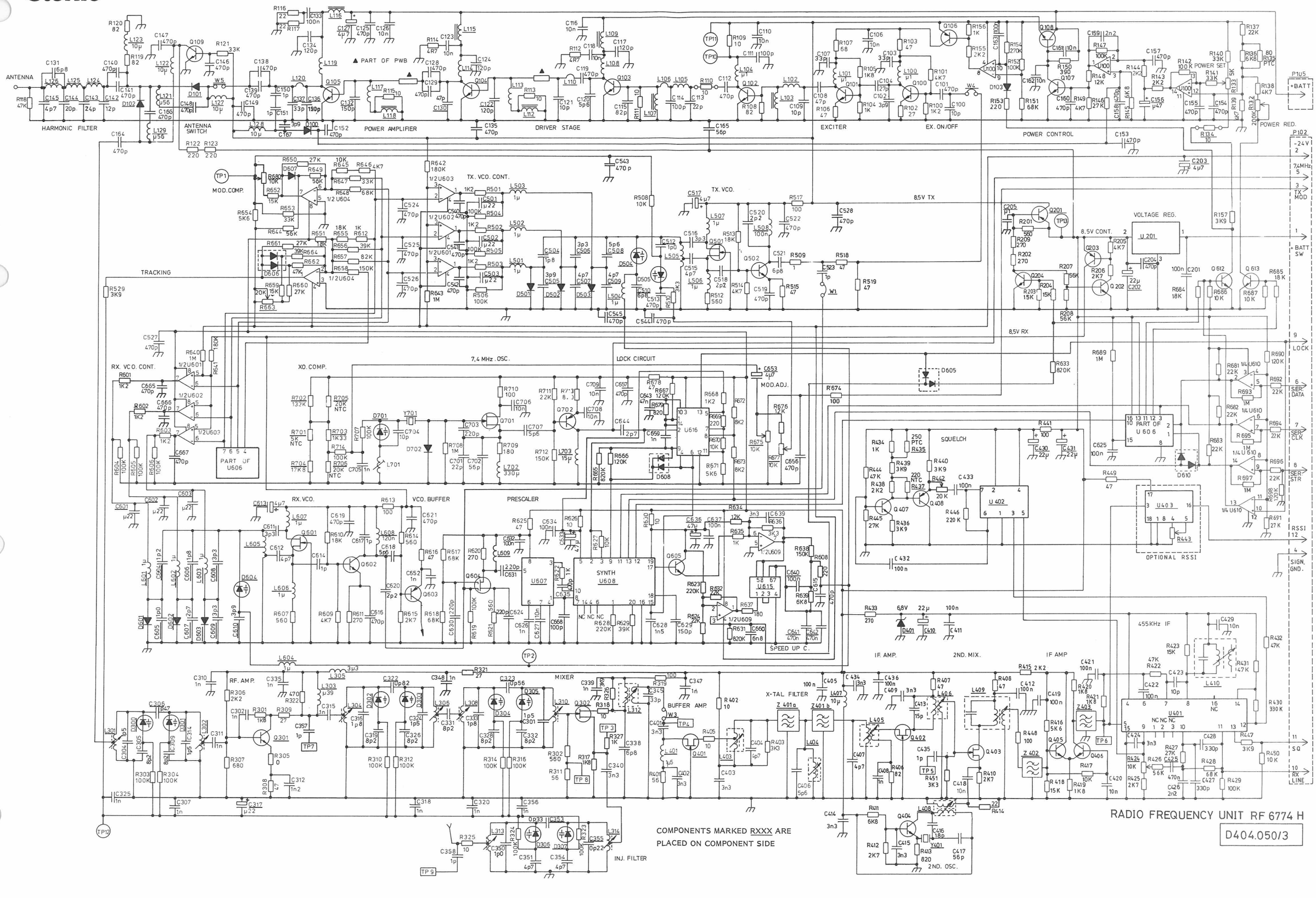

COMPONENTS MARKED RXXX ARE PLACED ON COMPONENT SIDE

RADIO FREQUENCY UNIT RF 6774 H

D404.050/3

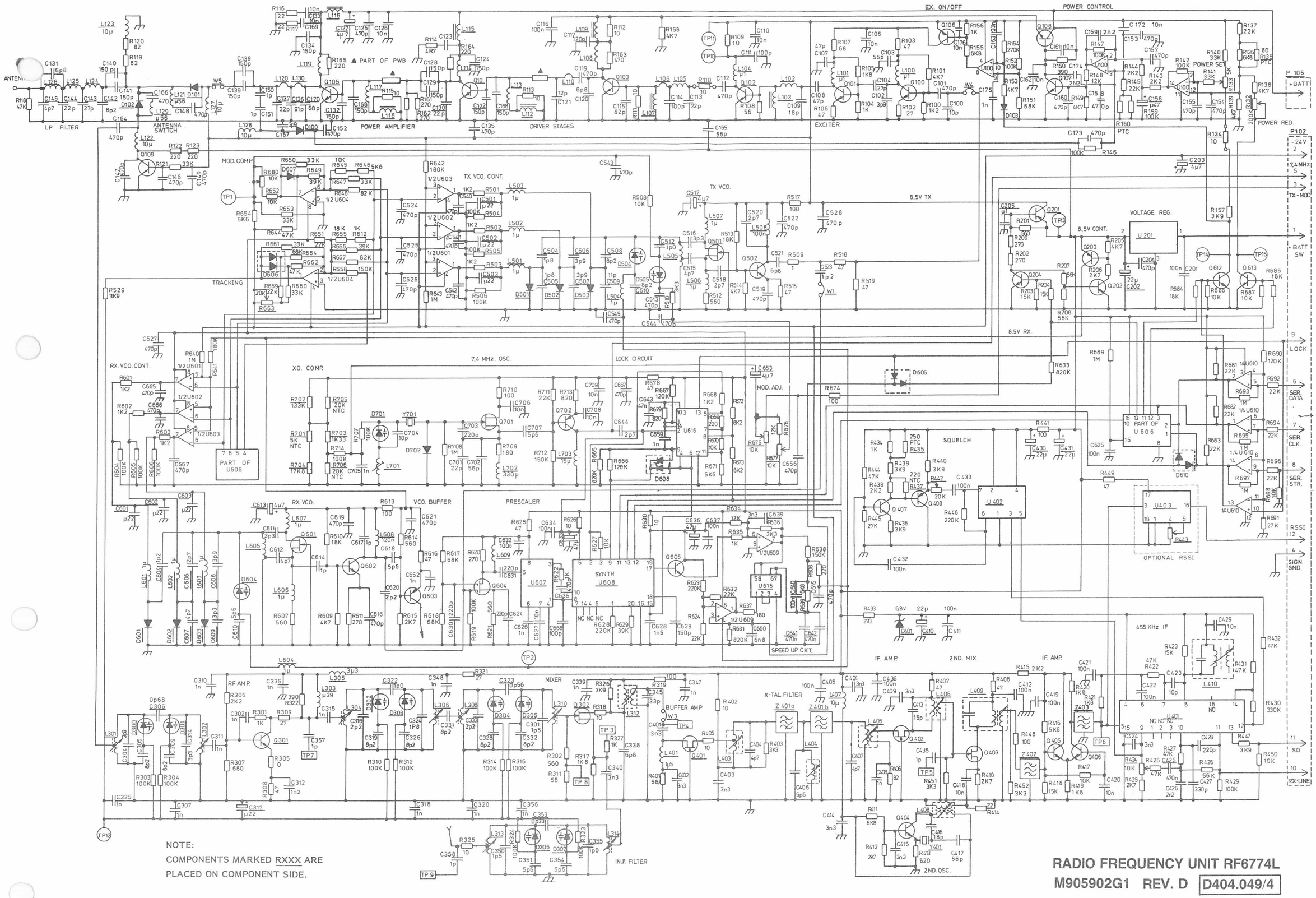

NOTE:
COMPONENTS MARKED RXXX ARE
PLACED ON COMPONENT SIDE.

RADIO FREQUENCY UNIT RF6774L
M905902G1 REV. D D404.049/4

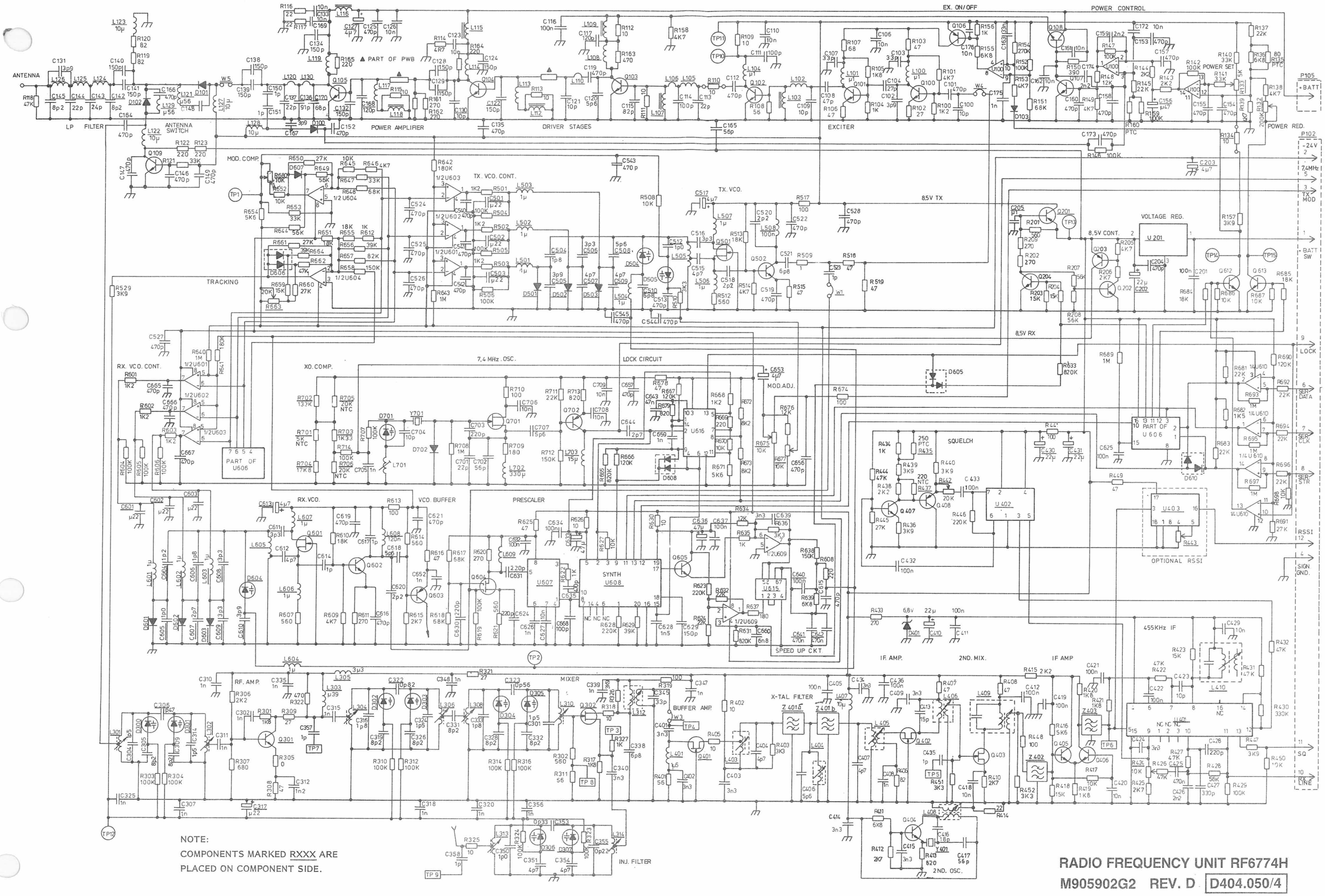

NOTE:
COMPONENTS MARKED RXXX ARE
PLACED ON COMPONENT SIDE.

RADIO FREQUENCY UNIT RF6774H
M905902G2 REV. D D404.050/4

XO6xxx & RA6004/RA6005

- Electrical Diagram
- Component layout

RA6004/RA6005 *

RSSI DETECTOR MODULES

(PART OF RSSI OPTION WITH IU6001)

An RSSI is a unit which in some way monitors the strength of the electromagnetic field in which the antenna of a receiver is located.

A way to perform this task is to measure the amplitude of the IF-signal in the receiver. This is done by the detector module RA6004. The output of this module is a DC-voltage which has a level corresponding to the strength of the field at the antenna. To make the information compatible to a micro-processor system, the voltage is lead to an interface module (IU6001) which transforms it to an 8 bit digital code.

IU6001 contains an ADC that can be read whenever information about the field strength is needed.

CIRCUIT DESCRIPTION

The RA6004 detector module is mounted on epoxy printed circuit board.

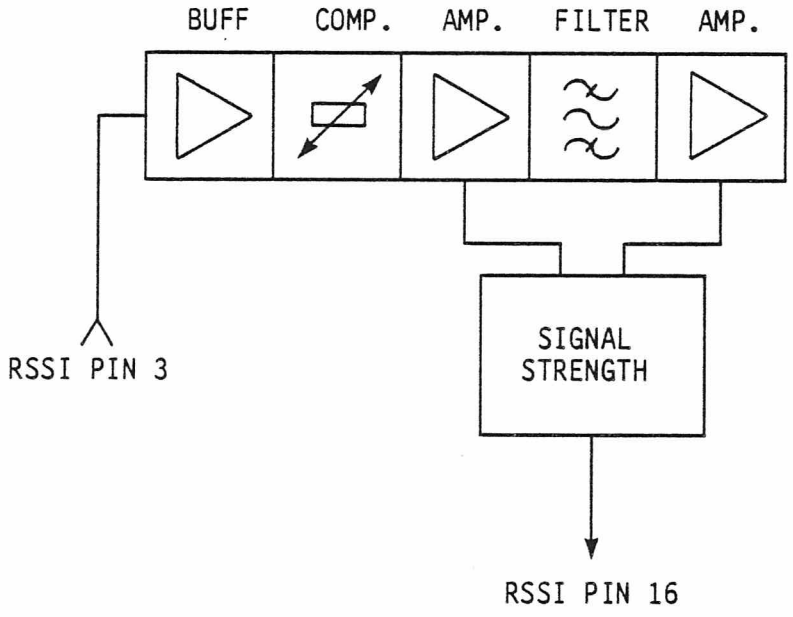

ALIGNMENT OF RSSI RA6004

The module buffers, amplifies and detects the amplitude of the 455 kHz IF-signal. The module also includes a compensation network which, to some degree, cancels the gain variation of the RX RF-path, caused by temperature changes. The amplification and detection is provided by an integrated circuit, U100.

This device is a complete FM IF-string but only the signal strength indicator is used. The output of the RA6004 is a voltage between 0 and 5 volts which is logarithmically related to the detector input, the IF-signal.

* RA6005 is no longer produced.

The IF-signal is fed to a source follower to prevent loading of the connection point. The source resistor is composed of four resistance including an NTC-resistor and a trimming resistance. Its purpose is partly to obtain temperature dependent attenuation and partly to obtain attenuation in general. The general attenuation is necessary as the IC is linear in the range from 10 uV to 10 mV and the IF-signal delivered by the radio typically ranges from 2 mV to 2 V. The trimmer is required since all radios do not have the same front gain.

From the source follower the signal is lead to the input of the IC which is coupled as an IF-amplifier. Pin 5 of the IC provides a current (0.5 - 10 uA) that relates logarithmically to the input, pin 16. After transformation of the current to a voltage of 0.05 - 3.0 V the final output is given at pin 16 of the RSSI module.

SPECIFICATION

Power supply
8.5 V ± 0.25 V

Current comsumption
Typical: 3 mA
Maximum: 10 mA

Input IF-signal 455 kHz
4 Vpp maximum

Input impedance
1 Mohm/5 pF

Output voltage
2.4 V typical at +25°C

Output impedance
100 Kohm/0.1 uF

Bandwidth
±10 kHz

Mechanical
46.0 x 12.8 mm

Temperature range
-25°C to +75°C

MOUNTING PROCEDURE

Mount RA6004 as U403 on the pertinent RF6xxx-board

On the same board; mount a potentiometer of 100 ohm lin as R443, code no. J708538P11

RA6004

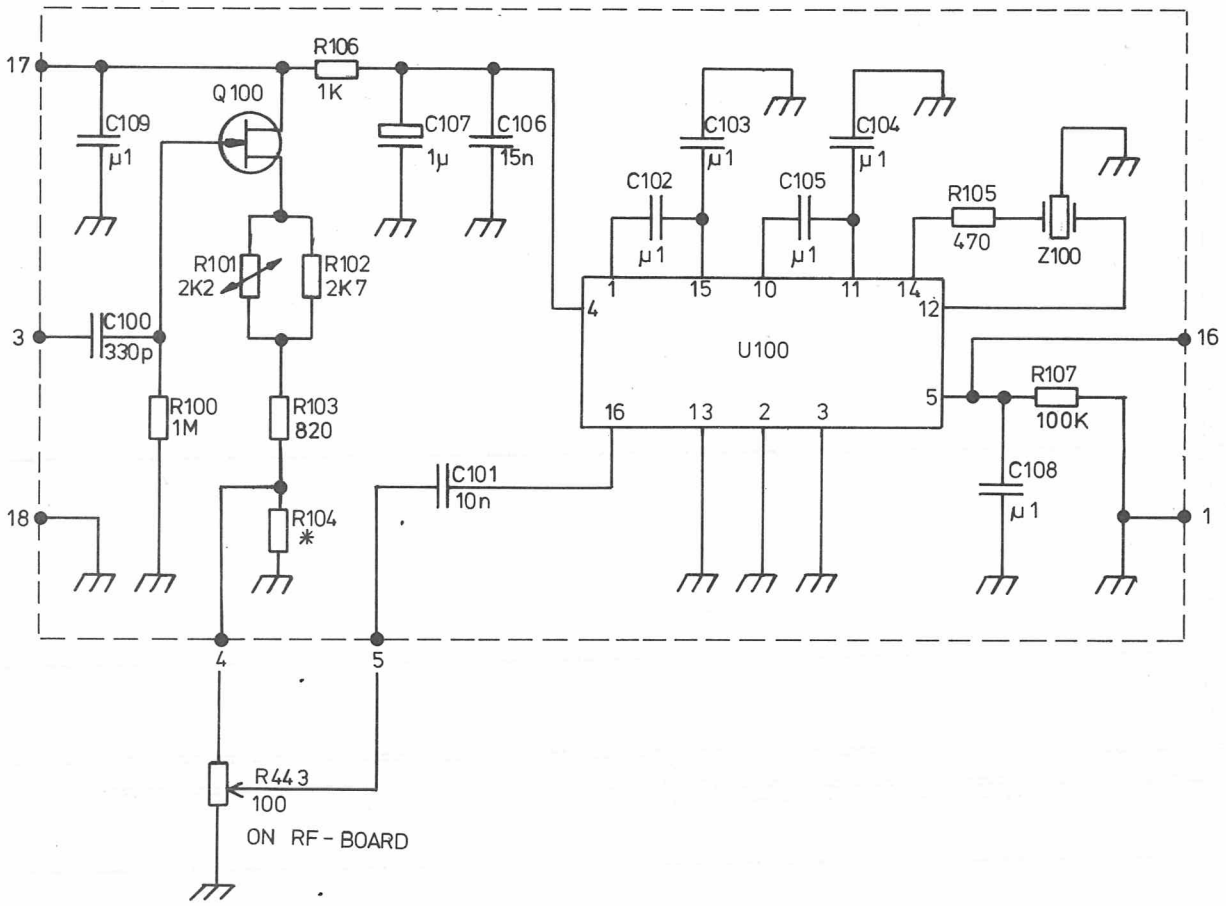

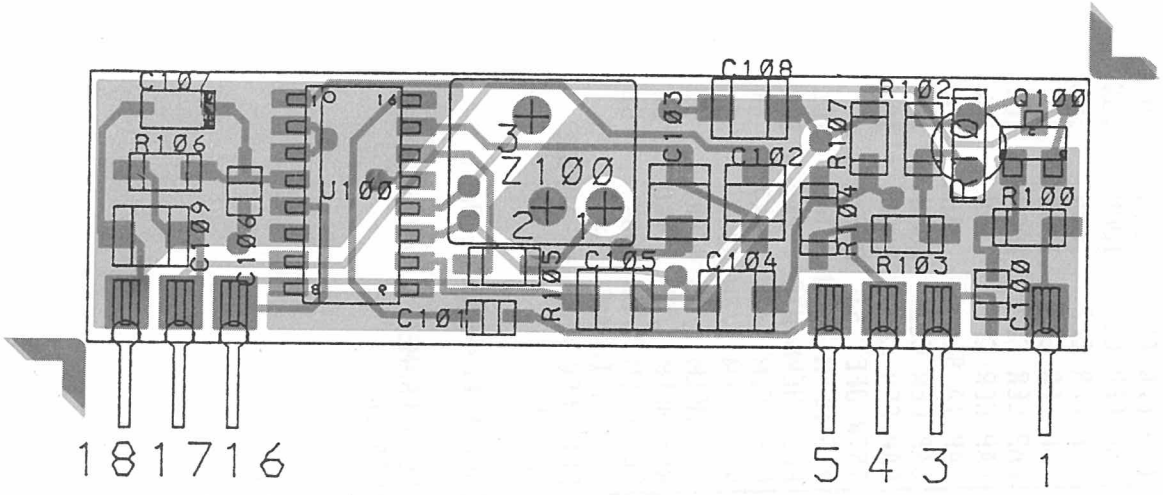

RSSI DETECTOR MODULES RA600X

CODE NO. L856009G1 | **D404.843**

DATE: 9/29/1987

Pos	Code No	Description	Qt
C100	J707436P73	CAP CER NPO 330P 5%	1
C101	J707438P14	CAP CER CL2 10N 10%	1
C102	J707438P26	CAP CER CL2 100N 10%	1
C103	J707438P26	CAP CER CL2 100N 10%	1
C104	J707438P26	CAP CER CL2 100N 10%	1
C105	J707438P26	CAP CER CL2 100N 10%	1
C106	J707438P16	CAP CER CL2 15N 10%	1
C107	J709426P7	CAP TA SOL 1U0 10V	1
C108	J707438P26	CAP CER CL2 100N 10%	1
C109	J707438P26	CAP CER CL2 100N 10%	1
Q100	J707419P1	TSTR JFET SI BF511	1
R100	J707385P105	RES MFLM 1/8W 1M0 10%	1
R101	J707406P4	RES THERM NTC 2K2 10%	1
R102	J707385P272	RES MFLM 1/8W 2K7 5%	1
R103	J707385P821	RES MFLM 1/8W 820R 5%	1
R105	J707385P471	RES MFLM 1/8W 470R 5%	1
R106	J707385P102	RES MFLM 1/8W 1K0 5%	1
R107	J707385P104	RES MFLM 1/8W 100K 5%	1
U100	J709576P2	IC LIN IF-AMP 604	1
Z100	J707446P1	FLTR CER 455K +/-10KHZ	1
	L856010P1R1	BD PW	1
		NON ELECTRONICAL PART	
	J707469P3	LEAD FRAME A=9.5 B=0.8	7
	J709494P1	SPACER	2

Pos	Code No	Description	Qt

PARTS LIST FOR RSSI DETECTOR MODULES RA600X : L856009G1 BD REV. 2

Pos	Code No.	Description	Qt
C100	J707436P73	CAP CER NPO 330P 5%	1
C101	J707438P14	CAP CER CL2 10N 10%	1
C102	J707438P26	CAP CER CL2 100N 10%	1
C103	J707438P26	CAP CER CL2 100N 10%	1
C104	J707438P26	CAP CER CL2 100N 10%	1
C105	J707438P26	CAP CER CL2 100N 10%	1
C106	J707438P16	CAP CER CL2 15N 10%	1
C107	J709426P7	CAP TA SOL 1U0 10V	1
C108	J707438P26	CAP CER CL2 100N 10%	1
C109	J707438P26	CAP CER CL2 100N 10%	1
Q100	J707419P1	TSTR JFET SI BF511	1
R100	J707385P105	RES MFLM 1/8W 1M0 10%	1
R101	J707406P4	RES THERM NTC 2K2 10%	1
R102	J707385P272	RES MFLM 1/8W 2K7 5%	1
R103	J707385P821	RES MFLM 1/8W 820R 5%	1
R105	J707385P471	RES MFLM 1/8W 470R 5%	1
R106	J707385P102	RES MFLM 1/8W 1K0 5%	1
R107	J707385P104	RES MFLM 1/8W 100K 5%	1
U100	J709576P2	IC LIN IF-AMP 604	1
Z100	J707446P1	FLTR CER 455K +/-10KHZ	1
	L856010P1R2	BD PW	1
		NON REFERENCED ITEMS:	
	J707469P3	LEAD FRAME A=9.5 B=0.8	7
	J709494P1	SPACER	2

Pos	Code No.	Description	Qt

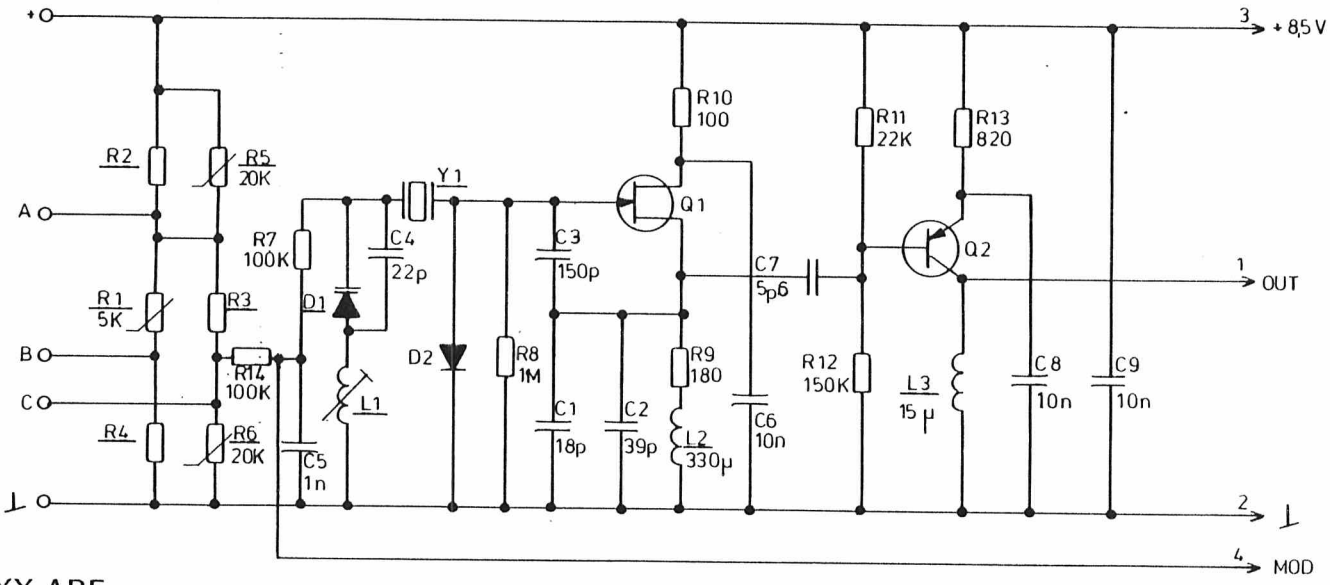

NOTE:

COMPONENTS MARKED RXXX ARE PLACED ON COMPONENT SIDE.

* R2,R3 AND R4 ARE FACTORY SELECTED COMPONENTS.

L855597		R2	R3	R4
G1 *	2 PPM	A701250P125 TO A701250P441	A701250P125 TO A701250P441	A701250P125 TO A701250P441
G2	5 PPM	A701250P443	A701250P196	A701250P305

CRYSTAL OSCILLATOR XO6000

REV.A **D404.221/3**

Storno

CHIP SIDE

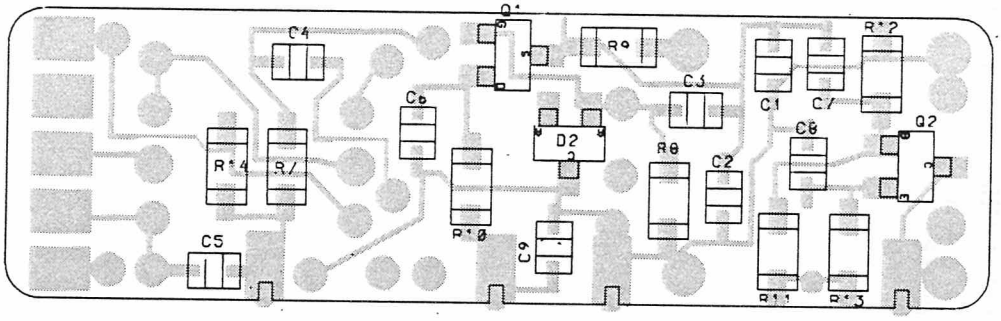

COMPONENT SIDE

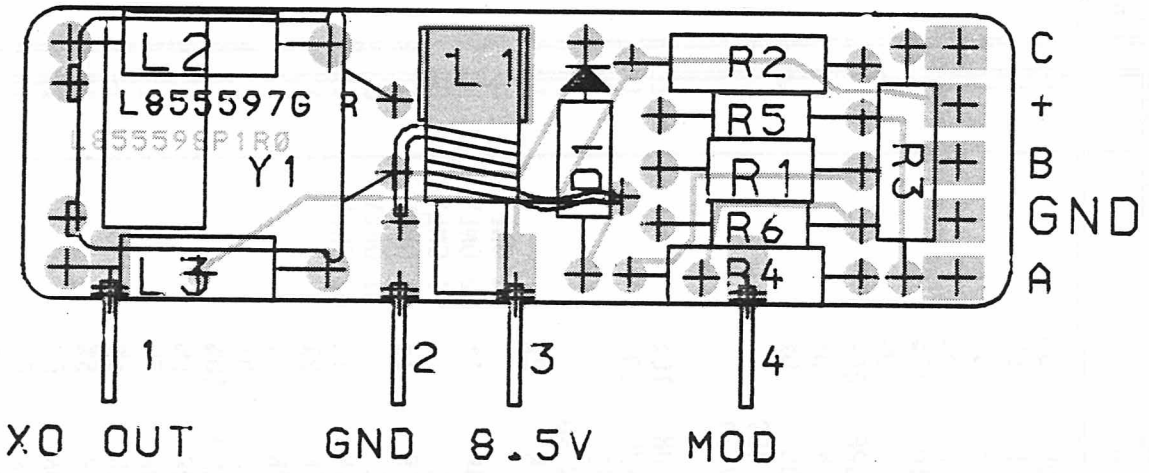

CRYSTAL OSCILLATOR XO6000
COMPONENT LAYOUT

D404.226

DATE: 5/18/1988

Pos	Code No	Description			Qt
C001	J707436P25	CAP CER NPO	18P	5%	1
C002	J708702P20	CAP CER N750	39P	5%	1
C003	J707436P65	CAP CER NPO	150P	5%	1
C004	J707436P29	CAP CER NPO	22P	5%	1
C005	J707438P5	CAP CER CL2	1N	10%	1
C006	J707438P14	CAP CER CL2	10N	10%	1
C007	J707436P10	CAP CER NPO	5P6	.25P	1
C008	J707438P14	CAP CER CL2	10N	10%	1
C009	J707438P14	CAP CER CL2	10N	10%	1
D001	A700073P1	DIO SI CAP	BB 409		1
D002	J707390P1	DIO SI SIG	BAV 74		1
L001	J707340G2	COIL ASM X06001			1
L002	A700024P43	COIL RF FIX	330UH	10%	1
L003	A700024P27	COIL RF FIX	15UH	10%	1
Q001	J707419P1	TSTR JFET SI	BF511		1
Q002	J707387P1	TSTR PNP SI	BCW 30		1
R001	J708666P1	RES THERM NTC	5K	2%	1
R002	A701250	RES MET FILM SPEC		G1 ONLY	0
R002	A701250P443	RES MFLM 1/4W	274K	1% G2 ONLY	1
R003	A701250	RES MET FILM SPEC		G1 ONLY	0
R003	A701250P196	RES MFLM 1/4W	976R	1% G2 ONLY	1
R004	A701250	RES MET FILM SPEC		G1 ONLY	0
R004	A701250P305	RES MFLM 1/4W	11KO	1% G2 ONLY	1
R005	J708666P2	RES THERM NTC	20K	2%	1
R006	J708666P2	RES THERM NTC	20K	2%	1
R007	J707385P104	RES MFLM 1/8W	100K	5%	1
R008	J707385P105	RES MFLM 1/8W	1MO	10%	1
R009	J707385P181	RES MFLM 1/8W	180R	5%	1
R010	J707385P101	RES MFLM 1/8W	100R	5%	1
R011	J707385P223	RES MFLM 1/8W	22K	5%	1
R012	J707385P154	RES MFLM 1/8W	150K	5%	1
R013	J707385P821	RES MFLM 1/8W	820R	5%	1
R014	J707385P104	RES MFLM 1/8W	100K	5%	1
Y001	J707567P19	CRYSTAL UNIT	7.4000MHZ		1
	L855598P1R1	BD PW			1

Pos	Code No	Description	Qt
		NON ELECTRONICAL PARTS	
	J707469P3	LEAD FRAME A=9.5 B=0.8	12
	J706737P1	CLIP COIL	1
	C850642P1	SPACER	1

XO6xxx

- Electrical diagram
- Component layout

Storno

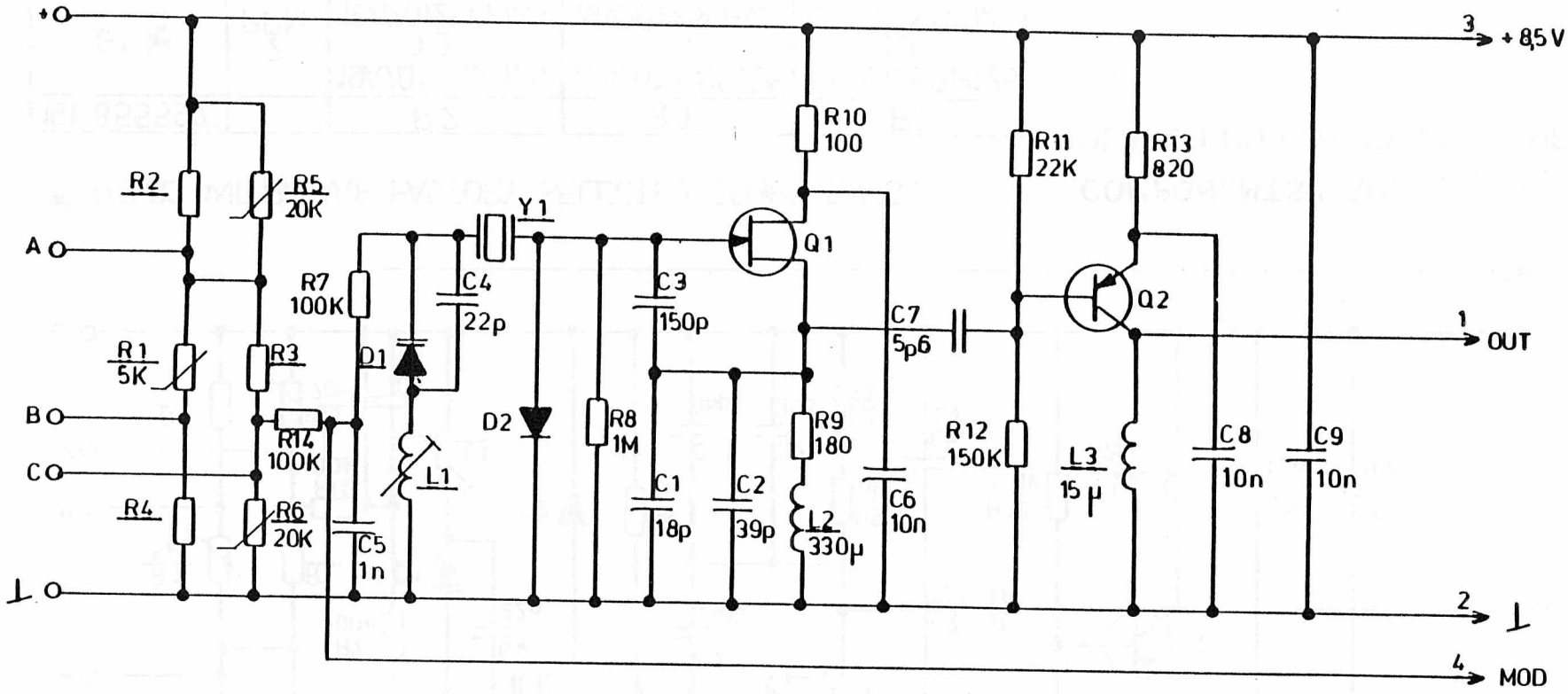

* R2.R3 AND R4 ARE FACTORY SELECTED COMPONENTS.

NOTE:

COMPONENTS MARKED RXXX ARE PLACED ON COMPOENTS SIDE

L855597		R2	R3	R4
G1 *	2 PPM	19A701250P125 TO 19A701250P441	19A701250P125 TO 19A701250P441	19A701250P125 TO 19A701250P441
G2	5 PPM	19A701250P432	19A701250P229	19A701250P309

>>THIS DOCUMENT REMAINS STORNO'S PROPERTY AND STORNO RESERVES ALL RIGHTS IN RESPECT TO THIS DOCUMENT. WITHOUT STORNO'S WRITTEN PERMISSION THE CONTENTS OF THE DOCUMENT MUST NOT BE IMPARTED TO A THIRD PARTY NOR BE USED FOR ANY UNAUTHORIZED PURPOSE<<

CRYSTAL OSCILLATOR XO6000

D404.221/2

Storno

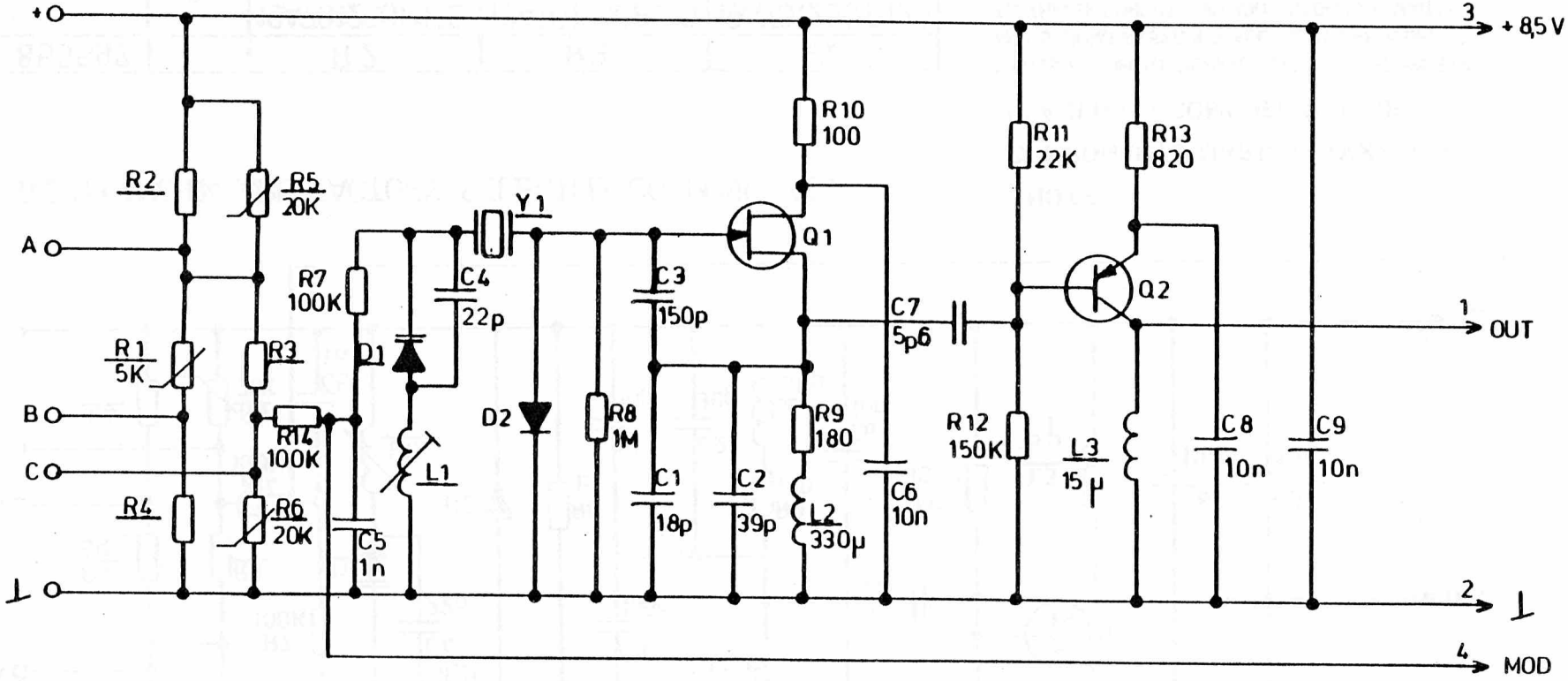

* R2.R3 AND R4 ARE FACTORY SELECTED COMPONENTS.

19L855597		R2	R3	R4
G1 *	2 PPM	19A701250P125 TO 19A701250P441	19A701250P125 TO 19A701250P441	19A701250P125 TO 19A701250P441
G2	5 PPM	19A701250P421	19A701250P213	19A701250P325

COMPONENTS MARKED RXXX ARE PLACED ON COMPONENT SIDE

CRYSTAL OSCILLATOR XO6000

D40.221

CHIP SIDE

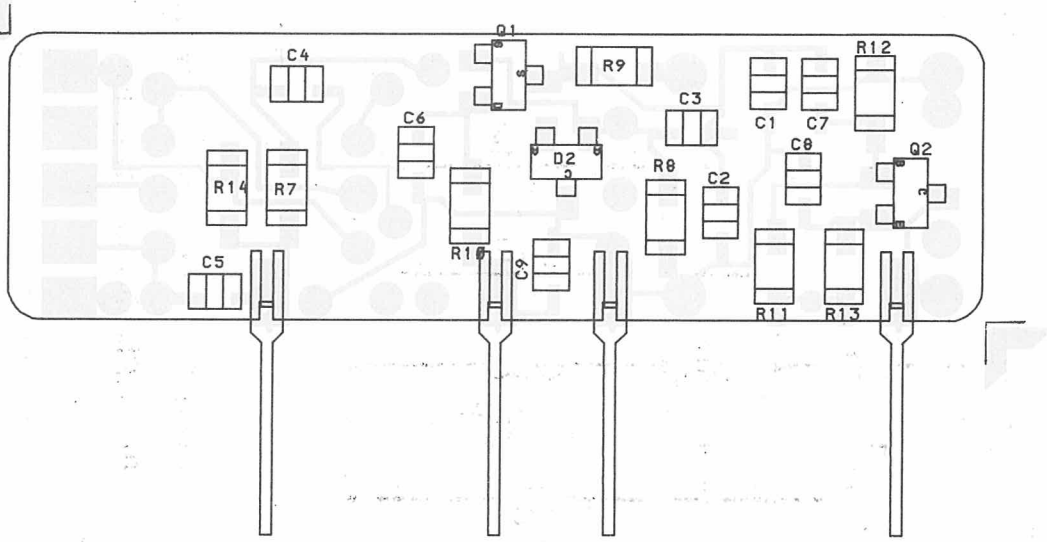

COMPONENT SIDE

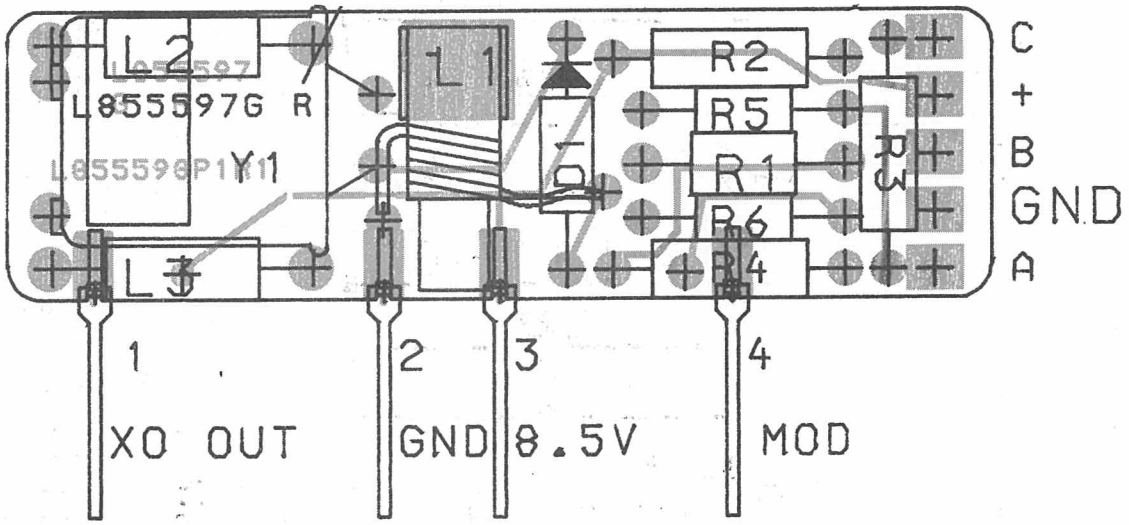

CRYSTAL OSCILLATOR XO6000
COMPONENT LAYOUT
REV. 1 D404.226/3

RA6004

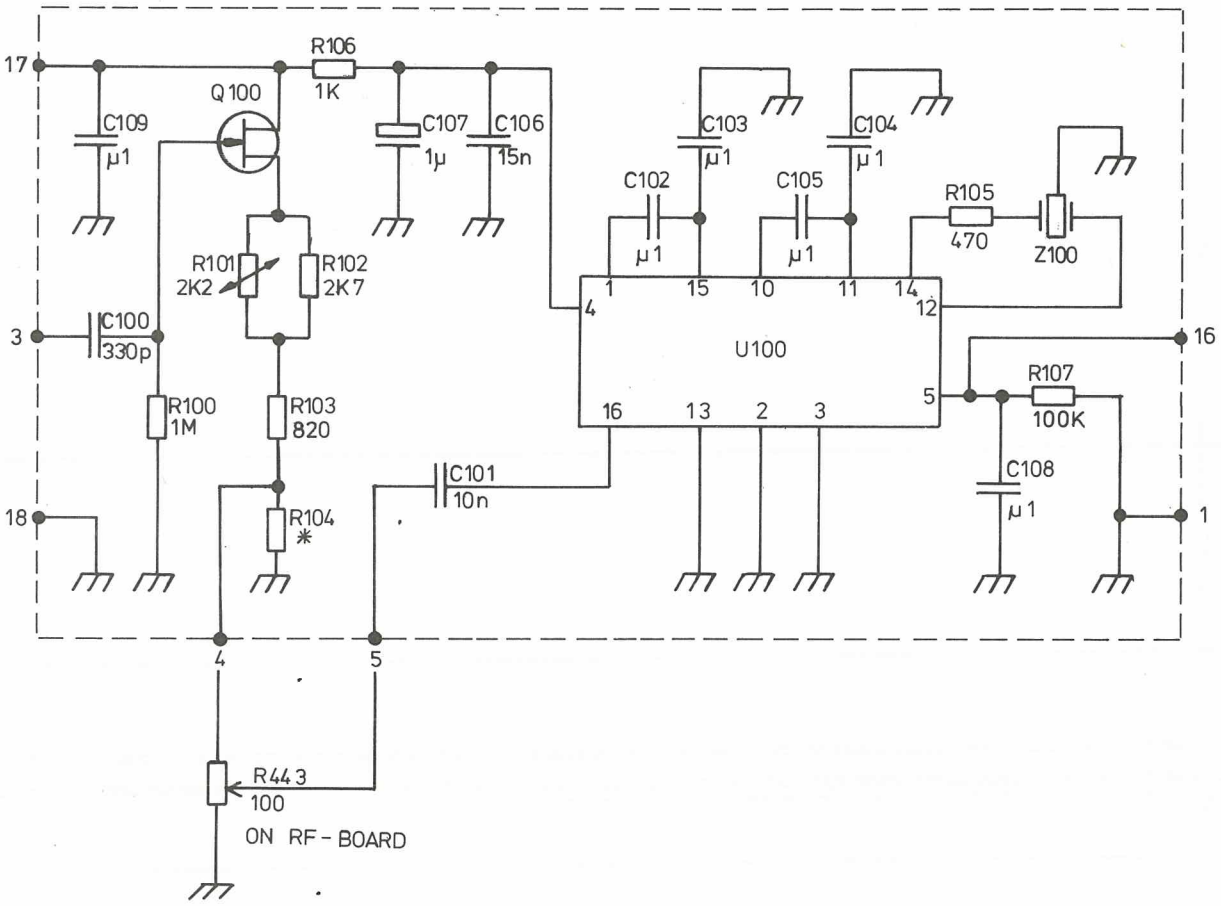

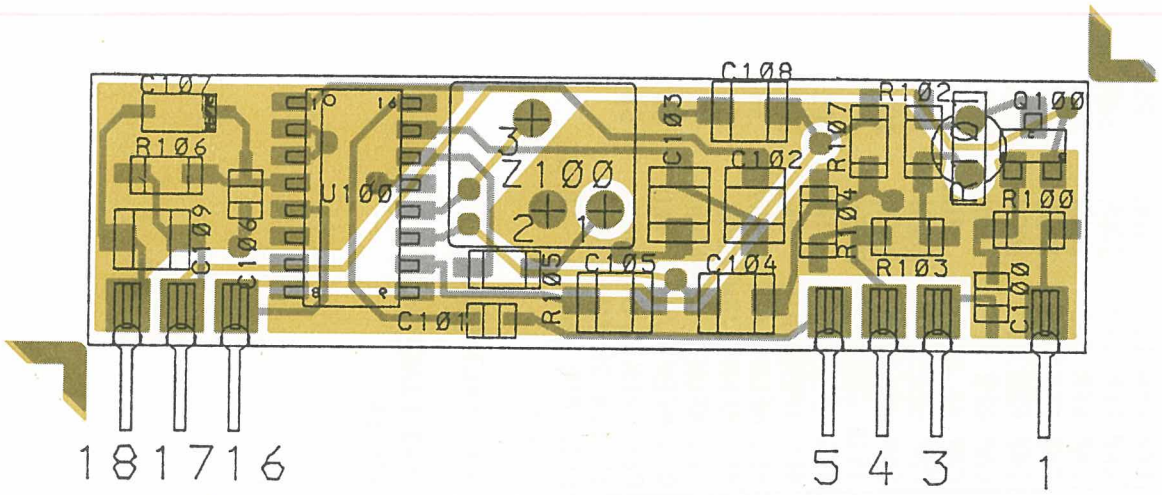

RSSI DETECTOR MODULES RA600X

CODE NO. L856009G1 | **D404.843**

CHIP SIDE

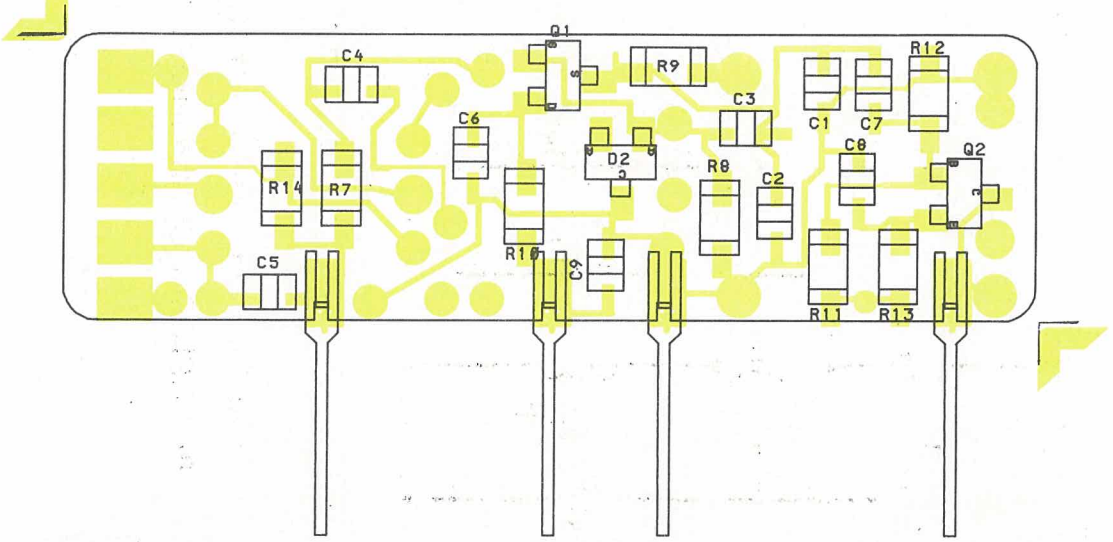

COMPONENT SIDE

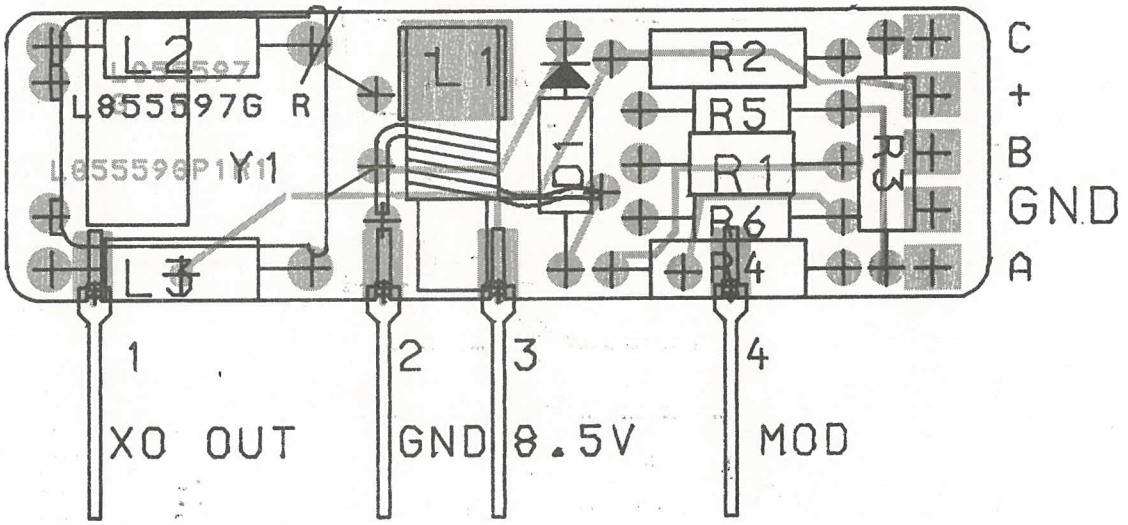

CRYSTAL OSCILLATOR XO6000
COMPONENT LAYOUT
REV. 1 D404.226/3